8–13–98
Vol. 63 No. 156
Pages 43287–43602

federal register

Thursday
August 13, 1998

Now Available Online via

GPO Access

Free online access to the official editions of the *Federal Register, the Code of Federal Regulations* and other Federal Register publications is available on *GPO Access*, a service of the U.S. Government Printing Office at:

http://www.access.gpo.gov/nara/index.html

For additional information on ***GPO Access*** products, services and access methods, see page II or contact the *GPO Access* User Support Team via:

★ Phone: toll-free: 1-888-293-6498

★ Email: gpoaccess@gpo.gov

Attention: Federal Agencies

Plain Language Tools Are Now Available

The Office of the Federal Register offers Plain Language Tools on its Website to help you comply with the President's Memorandum of June 1, 1998—Plain Language in Government Writing (63 FR 31883, June 10, 1998). Our address is: http://www.nara.gov/fedreg

For more in-depth guidance on the elements of plain language, read ''Writing User-Friendly Documents'' on the National Partnership for Reinventing Government (NPR) Website at: http://www.plainlanguage.gov

The **FEDERAL REGISTER** is published daily, Monday through Friday, except official holidays, by the Office of the Federal Register, National Archives and Records Administration, Washington, DC 20408, under the Federal Register Act (44 U.S.C. Ch. 15) and the regulations of the Administrative Committee of the Federal Register (1 CFR Ch. I). The Superintendent of Documents, U.S. Government Printing Office, Washington, DC 20402 is the exclusive distributor of the official edition.

The **Federal Register** provides a uniform system for making available to the public regulations and legal notices issued by Federal agencies. These include Presidential proclamations and Executive Orders, Federal agency documents having general applicability and legal effect, documents required to be published by act of Congress, and other Federal agency documents of public interest.

Documents are on file for public inspection in the Office of the Federal Register the day before they are published, unless the issuing agency requests earlier filing. For a list of documents currently on file for public inspection, see http://www.nara.gov/fedreg.

The seal of the National Archives and Records Administration authenticates the Federal Register as the official serial publication established under the Federal Register Act. Under 44 U.S.C. 1507, the contents of the **Federal Register** shall be judicially noticed.

The **Federal Register** is published in paper and on 24x microfiche. It is also available online at no charge as one of the databases on GPO Access, a service of the U.S. Government Printing Office.

The online edition of the **Federal Register** is issued under the authority of the Administrative Committee of the Federal Register as the official legal equivalent of the paper and microfiche editions (44 U.S.C. 4101 and 1 CFR 5.10). It is updated by 6 a.m. each day the **Federal Register** is published and it includes both text and graphics from Volume 59, Number 1 (January 2, 1994) forward.

GPO Access users can choose to retrieve online **Federal Register** documents as TEXT (ASCII text, graphics omitted), PDF (Adobe Portable Document Format, including full text and all graphics), or SUMMARY (abbreviated text) files. Users should carefully check retrieved material to ensure that documents were properly downloaded.

On the World Wide Web, connect to the **Federal Register** at http://www.access.gpo.gov/nara. Those without World Wide Web access can also connect with a local WAIS client, by Telnet to swais.access.gpo.gov, or by dialing (202) 512-1661 with a computer and modem. When using Telnet or modem, type swais, then log in as guest with no password.

For more information about GPO Access, contact the GPO Access User Support Team by E-mail at gpoaccess@gpo.gov; by fax at (202) 512–1262; or call (202) 512–1530 or 1–888–293–6498 (toll free) between 7 a.m. and 5 p.m. Eastern time, Monday–Friday, except Federal holidays.

The annual subscription price for the **Federal Register** paper edition is $555, or $607 for a combined **Federal Register,** Federal Register Index and List of CFR Sections Affected (LSA) subscription; the microfiche edition of the **Federal Register** including the Federal Register Index and LSA is $220. Six month subscriptions are available for one-half the annual rate. The charge for individual copies in paper form is $8.00 for each issue, or $8.00 for each group of pages as actually bound; or $1.50 for each issue in microfiche form. All prices include regular domestic postage and handling. International customers please add 25% for foreign handling. Remit check or money order, made payable to the Superintendent of Documents, or charge to your GPO Deposit Account, VISA, MasterCard or Discover. Mail to: New Orders, Superintendent of Documents, P.O. Box 371954, Pittsburgh, PA 15250–7954.

There are no restrictions on the republication of material appearing in the **Federal Register.**

How To Cite This Publication: Use the volume number and the page number. Example: 63 FR 12345.

SUBSCRIPTIONS AND COPIES

PUBLIC	
Subscriptions:	
Paper or fiche	**202–512–1800**
Assistance with public subscriptions	**512–1806**
General online information	**202–512–1530; 1–888–293–6498**
Single copies/back copies:	
Paper or fiche	**512–1800**
Assistance with public single copies	**512–1803**
FEDERAL AGENCIES	
Subscriptions:	
Paper or fiche	**523–5243**
Assistance with Federal agency subscriptions	**523–5243**

Printed on recycled paper.

Contents

Federal Register

Vol. 63, No. 156

Thursday, August 13, 1998

Agriculture Department
See Animal and Plant Health Inspection Service
See Forest Service
See Grain Inspection, Packers and Stockyards Administration
See Natural Resources Conservation Service

Animal and Plant Health Inspection Service
RULES
Interstate transportation of animals and animal products (quarantine):
Brucellosis in cattle and bison—
State and area classifications, 43291–43292
Tuberculosis in cattle and bison—
State and area classifications, 43290–43291
Plant-related quarantine, domestic:
Mediterranean fruit fly, 43287–43289

Army Department
NOTICES
Environmental statements; availability, etc.:
Base realignment and closure—
Bellmore Logistics Activity, NY, 43383
U.S. Army Garrison Fort Ritchie, MD, 43383–43384
Meetings:
Army Education Advisory Committee, 43384
Scientific Advisory Board, 43384

Centers for Disease Control and Prevention
NOTICES
Committees; establishment, renewal, termination, etc.:
Advisory Committee to Director, 43399
Meetings:
Scaffolding as anchorage point for fall-arrest systems; NIOSH meeting, 43399

Children and Families Administration
NOTICES
Agency information collection activities:
Proposed collection; comment request, 43399–43400

Coast Guard
RULES
Drawbridge operations:
New Jersey, 43322–43324
Regattas and marine parades:
Palm Beach County Offshore Grand Prix Festival and Air Show, 43321–43322
NOTICES
Meetings:
Marine Environment Protection Committee, 43440–43441

Commerce Department
See Export Administration Bureau
See International Trade Administration
See National Oceanic and Atmospheric Administration
NOTICES
Agency information collection activities:
Submission for OMB review; comment request, 43369–43370

Copyright Office, Library of Congress
NOTICES
Copyright office and procedures:
Fees; increase, 43426–43431

Customs Service
NOTICES
Customhouse broker license cancellation, suspension, etc.:
C&Y International et al., 43444–43445

Defense Department
See Army Department
See Navy Department
RULES
Acquisition regulations:
Contractor/insurance pension reviews
Correction, 43449

Education Department
NOTICES
Agency information collection activities:
Submission for OMB review; comment request, 43385
Grants and cooperative agreements; availability, etc.:
Special education and rehabilitative services—
Research and innovation to improve services and results for children with disabilities, and technology and media services for individuals with disabilities, 43597–43602
Meetings:
Foreign Medical Education and Accreditation National Committee, 43385–43386

Energy Department
See Federal Energy Regulatory Commission
NOTICES
Environmental statements; availability, etc.:
Pantex Plant, TX, et al.—
Weapons-usable fissile materials; storage and disposition, 43386–43392
Meetings:
Environmental Management Site-Specific Advisory Board—
Pantex Plant, TX, 43392–43393
Powerplant and industrial fuel use; new electric powerplant coal capability:
Self-certification filings—
Tenaska Frontier Partners, Ltd., 43393

Environmental Protection Agency
RULES
Air quality implementation plans; approval and promulgation; various States:
Arizona; correction, 43449
PROPOSED RULES
Hazardous waste:
Identification and listing—
Petroleum refining process wastes, 43361–43362
NOTICES
Grants and cooperative agreements; availability, etc.:
Sustainable development challenge grant program, 43593–43595

Hazardous waste:
Project XL program; site-specific projects—
Molex, Inc., facility, Lincoln, NE; withdrawn; response to comments, 43590–43592
Meetings:
Science Advisory Board, 43394–43396
Project XL (excellence and leadership) innovative technologies projects:
Massachusetts Environmental Protection Department, MA; umbrella final project agreement, 43592
Molex, Inc., facility, Lincoln, NE; final project agreement, 43587–43590
Superfund program: response and remedial actions, proposed settlements, etc.:
Cleve Reber Site, LA, 43397

Export Administration Bureau
NOTICES
Export privileges, actions affecting:
Abrishami, Elham, 43370–43371
Baugher, Jack Allen, 43371–43372

Federal Aviation Administration
RULES
Airworthiness directives:
Airbus, 43294–43299
Robinson Helicopter Co., 43299–43302
PROPOSED RULES
Airworthiness directives:
Aerospatiatle, 43335–43336
Airbus, 43349–43351
British Aerospace, 43331–43333, 43345–43347, 43351–43353
Dornier, 43347–43349
Fokker, 43342–43345
Lockheed, 43340–43342
Raytheon, 43336–43340
Short Brothers, 43333–43335

Federal Election Commission
NOTICES
Meetings; Sunshine Act, 43397

Federal Emergency Management Agency
NOTICES
Meetings:
National Fire Academy Board of Visitors, 43397
Technical Mapping Advisory Council, 43397–43398

Federal Energy Regulatory Commission
NOTICES
Environmental statements; availability, etc.:
Consumers Energy Co. et al., 43393–43394
Galloway, Inc., 43394
Meetings:
Midwest electric pricing issues, 43394
Applications, hearings, determinations, etc.:
Florida Gas Transmission Co., 43393

Federal Railroad Administration
NOTICES
Meetings:
Railroad Safety Advisory Committee, 43441

Fish and Wildlife Service
PROPOSED RULES
Endangered and threatened species:
Cactus ferruginous pygmy-owl, 43362–43364
NOTICES
Endangered and threatened species permit applications, 43411
Sport Fishing and Boating Partnership Council; national outreach and communications plan; comment request, 43410

Food and Drug Administration
RULES
Human drugs:
Pediculicide products (OTC); final monograph, 43302–43303
NOTICES
Agency information collection activities:
Proposed collection; comment request, 43400–43401
Meetings:
Medical Devices Advisory Committee, 43401
Reports and guidance documents; availability, etc.:
Accidental radioactive contamination of human food and animal feeds; recommendations for State and local agencies; guidance, 43402–43403

Forest Service
NOTICES
Meetings:
Deschutes Provincial Interagency Executive Committee Advisory Committee, 43367

General Services Administration
NOTICES
Freight shipment test pilot project; third party logistics services solicitation; correction, 43398

Grain Inspection, Packers and Stockyards Administration
RULES
Fees:
Official inspection and weighing services
CFR correction, 43289–43290

Health and Human Services Department
See Centers for Disease Control and Prevention
See Children and Families Administration
See Food and Drug Administration
See Health Care Financing Administration
See Health Resources and Services Administration
See Inspector General Office, Health and Human Services Department
See National Institutes of Health
See Substance Abuse and Mental Health Services Administration
NOTICES
Committees; establishment, renewal, termination, etc.:
Genetic Testing Advisory Committee, 43398–43399

Health Care Financing Administration
See Inspector General Office, Health and Human Services Department
NOTICES
Agency information collection activities:
Submission for OMB review; comment request, 43403

Health Resources and Services Administration
NOTICES
Agency information collection activities:
Proposed collection; comment request, 43404

Immigration and Naturalization Service
NOTICES
Agency information collection activities:
Proposed collection; comment request, 43415–43422

Inspector General Office, Health and Human Services Department
RULES
Medicare and State health care programs:
Fraud and abuse; advisory opinions
Correction, 43449
NOTICES
Program exclusions; list, 43404–43407

Interior Department
See Fish and Wildlife Service
See Land Management Bureau
See Surface Mining Reclamation and Enforcement Office
NOTICES
Meetings:
National Recreation Lakes Study Commission, 43410

Internal Revenue Service
RULES
Income taxes:
Beneficiary taxability under trust; CFR correction, 43303–43305
PROPOSED RULES
Income taxes:
S corporation subsidiaries
Hearing, 43353–43354
Widely held fixed investment trusts; reporting requirements, 43354–43361

International Trade Administration
NOTICES
Antidumping:
Industrial nitrocellulose from—
Germany, 43372–43373
Porcelain-on-steel cookware from—
Mexico, 43593–43595
Sebacic acid from—
China, 43373–43379
Export trade certificates of review, 43379–43380

International Trade Commission
NOTICES
Import investigations:
Titanium sponge from—
Japan et al., 43414

Justice Department
See Immigration and Naturalization Service
See Justice Programs Office
NOTICES
Agency information collection activities:
Submission for OMB review; comment request, 43414–43415

Justice Programs Office
NOTICES
Grants and cooperative agreements; availability, etc.:
Violent offender incarceration/truth-in-sentencing incentive program technical assistance and training, 43422–43423

Labor Department
See Occupational Safety and Health Administration

Land Management Bureau
NOTICES
Meetings:
National Historic Oregon Trail Interpretive Center Advisory Board, 43411
Opening of public lands:
California, 43411–43412
Realty actions; sales, leases, etc.:
Colorado, 43412–43413
Idaho, 43413
Survey plat filings:
Idaho, 43413–43414

Library of Congress
See Copyright Office, Library of Congress
NOTICES
Grants and cooperative agreements; availability, etc.:
Ameritech national digital library competition, 43425–43426

Maritime Administration
NOTICES
Applications, hearings, determinations, etc.:
Sea-Land Service, Inc., 43441–43442

National Aeronautics and Space Administration
PROPOSED RULES
Acquisition regulations:
Reportable item; definition, 43362

National Highway Traffic Safety Administration
NOTICES
Grants and cooperative agreements; availability, etc.:
Human surrogates; biomechanical response to impact; research studies, 43442–43444

National Institutes of Health
NOTICES
Inventions, Government-owned; availability for licensing, 43407–43408
Meetings:
National Institute of Mental Health, 43408–43409
National Institute of Nursing Research, 43409

National Oceanic and Atmospheric Administration
RULES
Fishery conservation and management:
West Coast States and Western Pacific fisheries—
Pacific Coast groundfish; correction, 43324
PROPOSED RULES
Fishery conservation and management:
Northeastern United States fisheries—
Mid-Atlantic Fishery Management Council; hearings, 43364–43366
NOTICES
Fishery conservation and management:
Alaska; fisheries of Exclusive Economic Zone—
Prohibited species donation program, 43380–43381
Permits:
Endangered and threatened species, 43381–43383

Natural Resources Conservation Service
NOTICES
Agency information collection activities:
Proposed collection; comment request, 43367–43368
Environmental statements; notice of intent:
Buena Vista Watershed, VA, 43368–43369

Navy Department
NOTICES
Inventions, Government-owned; availability for licensing, 43384
Patent licenses; non-exclusive, exclusive, or partially exclusive:
Market Central, Inc., 43385

Nuclear Regulatory Commission
PROPOSED RULES
Byproduct material; medical use:
Policy statement, 43580–43586
Revision, 43515–43580
NOTICES
Environmental statements; availability, etc.:
Illinois Power, 43435
Applications, hearings, determinations, etc.:
Brooks, Leland H., 43431–43432
Niagara Mohawk Power Corp., 43432–43434

Occupational Safety and Health Administration
PROPOSED RULES
Construction safety and health standards:
Steel erection, 43451–43513
NOTICES
Agency information collection activities:
Proposed collection; comment request, 43423–43425
Committees; establishment, renewal, termination, etc.:
Maritime Advisory Committee for Occupational Safety and Health, 43425

Personnel Management Office
PROPOSED RULES
Absence and leave:
Family and Medical Leave Act; implementation, 43325–43327

Public Health Service
See Centers for Disease Control and Prevention
See Food and Drug Administration
See Health Resources and Services Administration
See National Institutes of Health
See Substance Abuse and Mental Health Services Administration

Securities and Exchange Commission
NOTICES
Securities:
Suspension of trading—
Eventemp Corp., 43435
Self-regulatory organizations; proposed rule changes:
American Stock Exchange, Inc., et al., 43435–43439
Chicago Board Options Exchange, Inc.; correction, 43449
Chicago Stock Exchange, Inc.; correction, 43449

Small Business Administration
PROPOSED RULES
Business loans:
504 program financing and clarification of existing regulations, 43330–43331

Substance Abuse and Mental Health Services Administration
NOTICES
Meetings:
SAMHSA National Advisory Council et al., 43409–43410
Substance Abuse Prevention Center National Advisory Council, 43410

Surface Mining Reclamation and Enforcement Office
RULES
Permanent program and abandoned mine land reclamation plan submissions:
Mississippi, 43305–43321

Surface Transportation Board
NOTICES
Railroad operation, acquisition, construction, etc.:
Sunbelt Railroad Historical Trust, 43444

Tennessee Valley Authority
NOTICES
Agency information collection activities:
Submission for OMB review; comment request, 43439

Thrift Supervision Office
RULES
Operations:
Transactions with affiliates; reverse repurchase agreements, 43292–43294
PROPOSED RULES
Savings associations:
Electronic operations; Federal regulatory review, 43327–43330

Transportation Department
See Coast Guard
See Federal Aviation Administration
See Federal Railroad Administration
See Maritime Administration
See National Highway Traffic Safety Administration
See Surface Transportation Board
NOTICES
Agency information collection activities:
Submission for OMB review; comment request, 43440

Treasury Department
See Customs Service
See Internal Revenue Service
See Thrift Supervision Office

United States Information Agency
NOTICES
Grants and cooperative agreements; availability, etc.:
Samara Oblast; regional investment initiative Internet project; development, 43445–43447

Utah Reclamation Mitigation and Conservation Commission
NOTICES
Environmental statements; availability, etc.:
Central Utah Project; Angler-Access mitigation program, Strawberry Aqueduct and Collection System, Bonneville Unit, 43447–43448

Veterans Affairs Department
NOTICES
Meetings:
Rehabilitation Advisory Committee, 43448

Separate Parts In This Issue

Part II
Department of Labor, Occupational Safety and Health Administration, 43451–43513

Part III
Nuculear Regulatory Commission, 43515–43586

Part IV
Environmental Protection Agency, 43587–43592

Part V
Department of Commerce, International Trade Administration, 43593–43595

Part VI
Department of Education, 43597–43602

Reader Aids
Consult the Reader Aids section at the end of this issue for phone numbers, online resources, finding aids, reminders, and notice of recently enacted public laws.

CFR PARTS AFFECTED IN THIS ISSUE

A cumulative list of the parts affected this month can be found in the Reader Aids section at the end of this issue.

5 CFR
Proposed Rules:
630 43325

7 CFR
301 43287
800 43289

9 CFR
77 43290
78 43291

10 CFR
Proposed Rules:
Ch. 1 43580
20 43516
32 43516
35 43516

12 CFR
563 43292
Proposed Rules:
555 43327

13 CFR
Proposed Rules:
120 43330

14 CFR
39 (3 documents) 43294, 43297, 43299
Proposed Rules:
39 (11 documents) 43331, 43333, 43335, 43336, 43338, 43340, 43342, 43345, 43347, 43349, 43351

21 CFR
358 43302

26 CFR
1 43303
Proposed Rules:
1 (2 documents) 43353, 43354
301 43354

29 CFR
Proposed Rules:
1926 43452

30 CFR
924 43305

33 CFR
100 43321
117 43322

40 CFR
52 43449
Proposed Rules:
261 43361

42 CFR
1008 43449

48 CFR
242 43449
Proposed Rules:
1827 43362
1852 43362

50 CFR
660 43324
Proposed Rules:
17 (2 documents) 43362, 43363
648 43364

Rules and Regulations

Federal Register
Vol. 63, No. 156
Thursday, August 13, 1998

This section of the FEDERAL REGISTER contains regulatory documents having general applicability and legal effect, most of which are keyed to and codified in the Code of Federal Regulations, which is published under 50 titles pursuant to 44 U.S.C. 1510.

The Code of Federal Regulations is sold by the Superintendent of Documents. Prices of new books are listed in the first FEDERAL REGISTER issue of each week.

DEPARTMENT OF AGRICULTURE

Animal and Plant Health Inspection Service

7 CFR Part 301

[Docket No. 97–056–14]

Mediterranean Fruit Fly; Addition to Quarantined Areas

AGENCY: Animal and Plant Health Inspection Service, USDA.

ACTION: Interim rule and request for comments.

SUMMARY: We are amending the Mediterranean fruit fly regulations by adding a portion of Highlands County, FL, to the list of quarantined areas and restricting the intrastate and interstate movement of regulated articles from the quarantined area. This action is necessary on an emergency basis to prevent the spread of the Mediterranean fruit fly into noninfested areas of the continental United States.

DATES: Interim rule effective August 7, 1998. Consideration will be given only to comments received on or before October 13, 1998.

ADDRESSES: Please send an original and three copies of your comments to Docket No. 97–056–14, Regulatory Analysis and Development, PPD, APHIS, suite 3C03, 4700 River Road Unit 118, Riverdale, MD 20737–1238. Please state that your comments refer to Docket No. 97–056–14. Comments received may be inspected at USDA, room 1141, South Building, 14th Street and Independence Avenue SW., Washington, DC, between 8 a.m. and 4:30 p.m., Monday through Friday, except holidays. Persons wishing to inspect comments are requested to call ahead on (202) 690–2817 to facilitate entry into the comment reading room.

FOR FURTHER INFORMATION CONTACT: Mr. Michael B. Stefan, Operations Officer, Domestic and Emergency Programs, PPQ, APHIS, 4700 River Road Unit 134, Riverdale, MD 20737–1236, (301) 734–8247; or e-mail: michael.b.stefan@usda.gov.

SUPPLEMENTARY INFORMATION:

Background

The Mediterranean fruit fly, *Ceratitis capitata* (Wiedemann), is one of the world's most destructive pests of numerous fruits and vegetables. The Mediterranean fruit fly (Medfly) can cause serious economic losses. Heavy infestations can cause complete loss of crops, and losses of 25 to 50 percent are not uncommon. The short life cycle of this pest permits the rapid development of serious outbreaks.

The regulations in 7 CFR part 301.78 through 301.78–10 (referred to below as the regulations) restrict the interstate movement of regulated articles from quarantined areas to prevent the spread of the Medfly to noninfested areas of the United States.

On September 30, 1997, we published a declaration of extraordinary emergency (62 FR 51079, Docket No. 97–056–6) because a serious outbreak of the Medfly was occurring in Florida, and the State of Florida was unable to continue to take action necessary to control and eradicate the Medfly in the State. Because of the declaration of extraordinary emergency, the Animal and Plant Health Inspection Service (APHIS) has the authority to enforce restrictions on the intrastate and interstate movement of regulated articles from the areas in Florida quarantined because of the Medfly.

In an interim rule effective on April 17, 1998, and published in the **Federal Register** on April 23, 1998 (63 FR 20053–20054, Docket No. 98–046–1), we added a portion of Dade County, FL, to the list of quarantined areas and restricted the intrastate and interstate movement of regulated articles from the quarantined area. In a second interim rule effective on May 5, 1998, and published in the **Federal Register** on May 11, 1998 (63 FR 25748–25750, Docket No. 97–056–11), we expanded the quarantined area in Dade County, FL. In a third interim rule effective on May 13, 1998, and published in the **Federal Register** on May 19, 1998 (63 FR 27439–27440, Docket No. 97–056–12), we added a portion of Lake and Marion Counties, FL, to the list of quarantined areas and restricted the intrastate and interstate movement of regulated articles from the quarantined area. In a fourth interim rule effective on June 5, 1998, and published in the **Federal Register** on June 11, 1998 (63 FR 31887–31888, Docket No. 97–056–13), we added a portion of Manatee County, FL, to the list of quarantined areas and restricted the intrastate and interstate movement of regulated articles from the quarantined area.

Recent trapping surveys by inspectors of Florida State and by inspectors of APHIS have revealed that an infestation of Medfly has occurred in a portion of Highlands County, FL.

The regulations in § 301.78–3 provide that the Administrator of APHIS will list as a quarantined area each State, or each portion of a State, in which the Medfly has been found by an inspector, in which the Administrator has reason to believe that the Medfly is present, or that the Administrator considers necessary to regulate because of its inseparability for quarantine enforcement purposes from localities in which the Medfly has been found.

The boundary lines for a portion of a State being designated as quarantined are set up approximately four-and-one-half miles from the detection sites. The boundary lines may vary due to factors such as the location of Medfly host material, the location of transportation centers such as bus stations and airports, the patterns of persons moving in that State, the number and patterns of distribution of the Medfly, and the use of clearly identifiable lines for the boundaries.

In accordance with these criteria and the recent Medfly findings described above, we are amending § 301.78–3 by adding a portion of Highlands County, FL, to the list of quarantined areas. The new quarantined area is described in the rule portion of this document.

Emergency Action

The Administrator of the Animal and Plant Health Inspection Service has determined that an emergency exists that warrants publication of this interim rule without prior opportunity for public comment. Immediate action is necessary to prevent the Medfly from spreading to noninfested areas of the United States.

Because prior notice and other public procedures with respect to this action are impracticable and contrary to the public interest under these conditions,

we find good cause under 5 U.S.C. 553 to make it effective upon signature. We will consider comments that are received within 60 days of publication of this rule in the **Federal Register**. After the comment period closes, we will publish another document in the **Federal Register**. It will include a discussion of any comments we receive and any amendments we are making to the rule as a result of the comments.

Executive Order 12866 and Regulatory Flexibility Act

This rule has been reviewed under Executive Order 12866. For this action, the Office of Management and Budget has waived its review process required by Executive Order 12866.

This interim rule amends the Medfly regulations by adding a portion of Highlands County, FL, to the list of quarantined areas. This action is necessary on an emergency basis to prevent the spread of the Medfly into noninfested areas of the United States.

This interim rule affects the intrastate and interstate movement of regulated articles from the quarantined area in Highlands County, FL. We estimate that there are 426 entities in the quarantined area of Highlands County, FL, that sell, process, handle, or move regulated articles; this estimate includes 263 commercial growers, 2 transportation terminals, 20 fruit stands, 3 flea markets, 4 citrus packinghouses, 5 mobile vendors, 20 food stores, 4 common carriers, 25 nurseries, and 80 lawn maintenance companies. The number of these entities that meet the U.S. Small Business Administration's (SBA) definition of a small entity is unknown, since the information needed to make that determination (i.e., each entity's gross receipts or number of employees) is not currently available. However, it is reasonable to assume that most of the 426 entities are small in size, since the overwhelming majority of businesses in Florida, as well as the rest of the United States, are small entities by SBA standards.

The effect on the small entities that move regulated articles intrastate or interstate from the quarantined area will be minimized by the availability of various treatments that, in most cases, will allow those small entities to move regulated articles intrastate and interstate with very little additional costs. Also, many of these types of small entities sell other items in addition to the regulated articles, so the effect, if any, of the interim rule should be minimal.

Under these circumstances, the Administrator of the Animal and Plant Health Inspection Service has determined that this action will not have a significant economic impact on a substantial number of small entities.

Executive Order 12372

This program/activity is listed in the Catalog of Federal Domestic Assistance under No. 10.025 and is subject to Executive Order 12372, which requires intergovernmental consultation with State and local officials. (See 7 CFR part 3015, subpart V.)

Executive Order 12988

This rule has been reviewed under Executive Order 12988, Civil Justice Reform. This rule: (1) Preempts all State and local laws and regulations that are inconsistent with this rule; (2) has no retroactive effect; and (3) does not require administrative proceedings before parties may file suit in court challenging this rule.

National Environmental Policy Act

An environmental assessment and finding of no significant impact have been prepared for this rule. The site specific environmental assessment and programmatic Medfly environmental impact statement provide a basis for our conclusion that implementation of integrated pest management to achieve eradication of the Medfly would not have a significant impact on human health and the natural environment. Based on the finding of no significant impact, the Administrator of the Animal and Plant Health Inspection Service has determined that an environmental impact statement need not be prepared.

The environmental assessment and finding of no significant impact were prepared in accordance with: (1) The National Environmental Policy Act of 1969 (NEPA) (42 U.S.C. 4321 *et seq.*), (2) Regulations of the Council on Environmental Quality for implementing the procedural provisions of NEPA (40 CFR parts 1500–1508), (3) USDA regulations implementing NEPA (7 CFR part 1b), and (4) APHIS' NEPA Implementing Procedures (7 CFR part 372).

Copies of the environmental assessment and finding of no significant impact are available for public inspection at USDA, room 1141, South Building, 14th Street and Independence Avenue, SW., Washington, DC, between 8 a.m. and 4:30 p.m., Monday through Friday, except holidays. Persons wishing to inspect copies are requested to call ahead on (202) 690–2817 to facilitate entry into the reading room. In addition, copies may be obtained by writing to the individual listed under **FOR FURTHER INFORMATION CONTACT**.

Paperwork Reduction Act

This rule contains no information collection or recordkeeping requirements under the Paperwork Reduction Act of 1995 (44 U.S.C. 3501 *et seq.*).

List of Subjects in 7 CFR Part 301

Agricultural commodities, Incorporation by reference, Plant diseases and pests, Quarantine, Reporting and recordkeeping requirements, Transportation.

Accordingly, 7 CFR part 301 is amended as follows:

PART 301—DOMESTIC QUARANTINE NOTICES

1. The authority citation for part 301 continues to read as follows:

Authority: 7 U.S.C. 147a, 150bb, 150dd, 150ee, 150ff, 161, 162, and 164–167; 7 CFR 2.22, 2.80, and 371.2(c).

2. In § 301.78–3, paragraph (c), the entry for Florida is amended by adding an entry for Highlands County, FL, in alphabetical order, to read as follows:

§ 301.78–3 Quarantined areas.

* * * * *

(c) * * *

Florida

* * * * *

Highlands County. That portion of Highlands County beginning at the northeast corner of Sec. 15, T. 33, R. 29; then south along the eastern section line of Sec. 15, T. 33, R. 29, to the southwest corner of Sec. 14, T. 33, R. 29; then east along the southern section line of Sec. 14, T. 33, R. 29, to the northeast corner of Sec. 23, T. 33, R. 29; then south along the eastern section line of Secs. 23 and 26, T. 33, R. 29, to the southwest corner of Sec. 25, T. 33, R. 29; then east along the southern section line of Sec. 25, T. 33, R. 29, to the northeast corner of Sec. 36, T. 33, R. 29; then south along the eastern section line of Sec. 36, T. 33, R. 29, to the northwest corner of Sec. 6, T. 34, R. 30; then east along the northern section line of Sec. 6, T. 34, R. 30, to Arbuckle Creek; then south along the western bank of Arbuckle Creek to Carter Creek; then west along the northern bank of Carter Creek to the eastern section line of Sec. 13, T. 34, R. 29; then south along the eastern section line of Secs. 24 and 25, T. 34, R. 29, to the CSX Railroad; then west along the CSX Railroad to the extension of Snyder Road; then south along the extension of Snyder Road and Snyder Road to the southwest corner of Sec. 36, T.34, R. 29 (Moon Ranch Road); then east along the southern section line of Sec. 36, T. 34, R. 29, to the southern section line of

Sec. 31, T. 34, R. 30; the south along the southern section line of Sec. 31, T. 34, R. 30, to the northeast corner of Sec. 6, T. 35, R. 30; then south along the eastern section line of Sec. 6, T. 35, R. 30, to Webster Turn Drive; then southwest along Webster Turn Drive to Airport Road; then south along Airport Road to the southern section line of Sec. 7, T. 35, R. 30; then east along the southern section line of Sec. 7, T. 35, R. 30, to the southwest corner of Sec. 8, T. 35, R. 30; then south along the western section line of Secs. 17, 20, 29, and 32, T. 35, R. 30, to Josephine Creek; then west along the northern shoreline of Josephine Creek to the eastern section line of Sec. 4, T. 36, R. 29; then south along the eastern section line of Sec. 4, T. 36, R. 29, to the southern section line of Sec. 4, T. 36, R. 29; then west along the southern section line of Secs. 4, 5, and 6, T. 36, R. 29 to an imaginary line drawn to Northwest Josephine Road; then north along the imaginary line drawn to Northwest Josephine Road to Lake Josephine Drive; then west along Lake Josephine Drive to Orange Blossom Boulevard; then north along Orange Blossom Boulevard to the southern section line of Sec. 30, T. 35, R. 29; then west along the southern section line of Sec. 30, T. 35, R. 29, to the southern section line of Sec. 25, T. 35, R. 28; then west along the southern section line of Sec. 25, T. 35, R. 28, to the eastern section line of Sec. 26, T. 35, R. 28; then north along the eastern section line of Secs. 26, 23, 14, and 11, T. 35, R. 28, to 13th Avenue (also known as Azalea Terrace); then west along 13th Avenue (also known as Azalea Terrace) to Azalea Terrace extension; then west along the extension of Azalea Terrace until it becomes Carmel Avenue; then west along Carmel Avenue to its extension; then west along the extension of Carmel Avenue to Washington Road; then north along Washington Road to its extension; then north along the extension of Washington Road to the southeast corner of Sec. 28, T. 34, R. 28; then west along the southern section line of Secs. 28 and 29, T. 34, R. 28, to the southwest corner of Sec. 29, T. 34, R. 28; then north along the western section line of Secs. 29, 20, 17, 8, 5, and 32, T. 33, R. 28, to Zoreta Drive; then east along Zoreta Drive to Nitschke Road; then north along Nitschke Road to the southwest corner fo Sec. 28, T. 33, R. 28; then east along the southern section line of Sec. 28, T. 33, R. 28, to U.S. Highways 27 and 98; then north along U.S. Highways 27 and 98 to West Main Street (State Road 17); then east along West and East Main Street (State Road 17) to County Road 17; then north along County Road 17 to the northwest corner of Sec. 13, T. 33, R. 28; then east along the northern section line of Sec. 13, T. 33, R. 28, and Secs. 18, 17, 16, and 15, T. 33, R. 29, to the point of beginning.

* * * * *

Done in Washington, DC, this 7th day of August 1998.

Joan M. Arnoldi,

Acting Administrator, Animal and Plant Health Inspection Service.

[FR Doc. 98–21761 Filed 8–12–98; 8:45 am]

BILLING CODE 3410–34–P

DEPARTMENT OF AGRICULTURE

Grain Inspection, Packers and Stockyards Administration

7 CFR Part 800

Fees for Official Inspection and Official Weighing Services

CFR Correction

In Title 7 of the Code of Federal Regulations, parts 700 to 899, revised as of January 1, 1998, make the following correction:

On page 476, in § 800.71, in the paragraph (a) tables, following Schedule A, Table 3, Schedules B and C were inadvertently omitted. The reinstated text reads as follows:

§ 800.71 Fees assessed by the Service.

(a)* * *

SCHEDULE B—FEES FOR OFFICIAL INSPECTION, WEIGHING, AND APPEAL INSPECTION SERVICES PERFORMED IN CANADA[1]

Inspection and weighing service (bulk or sacked grain)	Regular workday (Monday thru Saturday)	Non-regular workday (Sunday and holiday)
(1) Original inspection services and official weighing services:[2 3]		
(i) Contract services (per hour per service representative)	$103.00	$130.00
(ii) Noncontract service (per hour per service representative)	137.00	172.00

SCHEDULE B—FEES FOR OFFICIAL INSPECTION, WEIGHING, AND APPEAL INSPECTION SERVICES PERFORMED IN CANADA[1]—Continued

Inspection and weighing service (bulk or sacked grain)	Regular workday (Monday thru Saturday)	Non-regular workday (Sunday and holiday)
(2) Extra copies of certificates (per copy)	3.00	3.00

[1] Official inspection and weighing services include, but are not limited to grading, weighing, sampling, stowage examination, equipment testing, scale testing and certification, test weight reverification, evaluation of inspection and weighing equipment demonstrating official inspection and weighing functions, furnishing standard illustrations, and certifying inspection and weighing results.

[2] Fees for reinspection and appeal inspection services shall be assessed at the applicable contract or noncontract hourly rate as the original inspection. However, if additional personnel are required to perform the reinspection or appeal inspection service, the applicant will be assessed the noncontract original inspection hourly fee.

[3] Board appeal inspections are based on file samples. See § 800.71, Schedule A for Board Appeal fees.

SCHEDULE C—FEES FOR FGIS SUPERVISION OF OFFICIAL INSPECTION AND WEIGHING SERVICES PERFORMED BY DELEGATED STATES AND/OR DESIGNATED AGENCIES IN THE UNITED STATES[1]

TABLE 1

Inspection services (bulk or sacked grain)	Offical inspection or reinspection services
(1) Official sample-lot inspection service (white certificate):	
(i) For official grade and official factor determinations:.	
(A) Truck or trailer (per inspection[2]	$0.30
(B) Boxcar or hopper car (per inspection[2]	0.95
(C) Barge (per inspection)[2]	6.15
(D) Ship (per ship)[3]	49.20
(E) All other lots (per inspection)[2 4]	0.30
(ii) For official factor or official criteria determinations:.	
(A) Factor determination (per inspection) (maximum 2 factors)[5]	0.20
(B) Official criteria[2 6]	0.20
(2) Stowage examination services:	
(i) Ship (per stowage certificate)	3.00
(ii) Other carriers (per stowage certificate)	0.20

SCHEDULE C—FEES FOR FGIS SUPERVISION OF OFFICIAL INSPECTION AND WEIGHING SERVICES PERFORMED BY DELEGATED STATES AND/OR DESIGNATED AGENCIES IN THE UNITED STATES[1]—Continued

TABLE 1

Inspection services (bulk or sacked grain)	Offical inspection or reinspection services
(3) Warehouseman's sample-lot inspection service (yellow certificate) or submitted sample inspection service (pink certificate):	
(i) For official grade and official factor determinations (per inspection)	0.30
(ii) For official factor or official criteria determinations:.	
(A) Factor determination (per inspection) (maximum 2 factors)[5]	0.20
(B) Official criteria[2 6]	0.20
(4) Reinspection services:	
(i) Truck, boxcar, hopper car, barge, ship, warehouseman's sample-lot, submitted sample, factor determination, and all other lots (per sample inspected)	0.30
(ii) Official criteria[2 6]	0.20

NOTE: The footnotes for Table 1 are shown at the end of Table 2.

TABLE 2

Official services (bulk or sacked grain)	Official weighing services	
	(class X)	(class Y)
Official weighing services:		
(i) Truck or trailer (per carrier)	$0.30	$0.20
(ii) Boxcar or hopper car (per carrier)	.95	.25
(iii) Barge (per carrier)	6.15	1.55
(iv) Ship (per carrier) [3 7]	49.20	12.30
(v) All other lots (per lot or part lot) [4]	.30	.20

[1] The fees include the cost of supervision functions performed by the Service for official inspection and weighing services performed by delegated States and/or designated agencies.

[2] A fee shall be assessed for each carrier or sample inspected if a combined lot certificate is issued or a uniform loading plan is used to determine grade.

[3] A fee shall be assessed per ship regardless of the number of lots or sublots loaded at a specific service point. A fee shall not be assessed for divided-lot certificates.

[4] Inspection services for all other lots include, but are not limited to, sampling service, condition examinations, and examination of grain in bins and containers. For weighing services, all other lots include, but are not limited to, seavans and inhouse bin transfers.

[5] Fees shall be assessed for a maximum of two factors. If more than two factors are determined, fees are assessed at rates in Table 1 (1)(i) or (3)(i) above, as applicable, based on carrier or type sample represented.

[6] Official criteria includes, but is not limited to, protein and oil analyses. A fee shall be assessed for each sample tested.

[7] A Class Y ship fee shall be assessed for shipments destined for domestic markets only.

* * * * *

BILLING CODE 1505–01–D

DEPARTMENT OF AGRICULTURE

Animal and Plant Health Inspection Service

9 CFR Part 77

[Docket No. 98–081–1]

Tuberculosis in Cattle and Bison; State Designation; Michigan

AGENCY: Animal and Plant Health Inspection Service, USDA.

ACTION: Interim rule and request for comments.

SUMMARY: We are amending the tuberculosis regulations concerning the interstate movement of cattle and bison by reducing the designation of Michigan from an accredited-free State to an accredited-free (suspended) State. We have determined that Michigan no longer meets the criteria for designation as an accredited-free State but meets the criteria for designation as an accredited-free (suspended) State. This change is necessary to prevent the spread of tuberculosis in cattle and bison.

DATES: Interim rule effective August 13, 1998. Consideration will be given only to comments received on or before October 13, 1998.

ADDRESSES: Please send an original and three copies of your comments to Docket No. 98–081–1, Regulatory Analysis and Development, PPD, APHIS, Suite 3C03, 4700 River Road, Unit 118, Riverdale, MD 20737–1238. Please state that your comments refer to Docket No. 98–081–1. Comments received may be inspected at USDA, room 1141, South Building, 14th Street and Independence Avenue SW., Washington, DC, between 8 a.m. and 4:30 p.m., Monday through Friday, except holidays. Persons wishing to inspect comments are requested to call ahead on (202) 690–2817 to facilitate entry into the comment reading room.

FOR FURTHER INFORMATION CONTACT: Dr. Joseph VanTiem, Senior Staff Veterinarian, National Animal Health Programs, VS, APHIS, 4700 River Road, Unit 43, Riverdale, MD 20737–1231, (301) 734–7716.

SUPPLEMENTARY INFORMATION:

Background

Bovine tuberculosis is the contagious, infectious, and communicable disease caused by *Mycobacterium bovis.* The tuberculosis regulations contained in 9 CFR part 77 (referred to below as the regulations), regulate the interstate movement of cattle and bison because of tuberculosis. Cattle and bison not known to be affected with or exposed to tuberculosis are eligible for interstate movement without restriction if those cattle or bison are moved from jurisdictions designated as accredited-free States, accredited-free (suspended) States, or modified accredited States. The regulations restrict the interstate movement of cattle or bison not known to be affected with or exposed to tuberculosis if those cattle or bison are moved from jurisdictions designated as nonmodified accredited States.

The status of a State is based on its freedom from evidence of tuberculosis, the effectiveness of the State's tuberculosis eradication program, and the degree of the State's compliance with the standards contained in a document captioned ''Uniform Methods and Rules—Bovine Tuberculosis Eradication'' (UMR), which is incorporated by reference into the regulations.

An accredited-free State, as defined in 77.1 of the regulations, is a State that has no findings of tuberculosis in any cattle or bison in the State for at least 5 years. The State must also comply with all the provisions of the UMR regarding accredited-free States.

An accredited-free (suspended) State is defined as a State with accredited-free status in which tuberculosis has been detected in any cattle or bison in the State. A State with accredited-free (suspended) status is qualified for redesignation as an accredited-free State after the herd in which tuberculosis is detected has been quarantined, an epidemiological investigation has confirmed that the disease has not spread from the herd, and all reactor cattle and bison have been destroyed. However, if tuberculosis is detected in two or more herds in the State within 48 months, the State's accredited-free status is revoked.

Before publication of this interim rule, Michigan was designated in § 77.1 of the regulations as an accredited-free State. However, because tuberculosis has recently been confirmed in one beef herd within the State, the Administrator has determined that Michigan no longer meets the criteria for designation as an accredited-free State, but instead meets the criteria for designation as an accredited-free (suspended) State. Therefore, we are amending the regulations by removing Michigan from the list of accredited-free States in § 77.1 and adding it to the list of accredited-free (suspended) States in that section.

Immediate Action

The Administrator of the Animal and Plant Health Inspection Service has determined that there is good cause for publishing this interim rule without prior opportunity for public comment. Immediate action is necessary to change the regulations so that they accurately reflect the current tuberculosis status of Michigan as an accredited-free (suspended) State. This will provide prospective cattle and bison buyers with accurate and up-to-date information.

Because prior notice and other public procedures with respect to this action are impracticable and contrary to the public interest under these conditions, we find good cause under 5 U.S.C. 553 to make it effective upon publication in the **Federal Register**. We will consider comments that are received within 60 days of publication of this rule in the **Federal Register**. After the comment period closes, we will publish another document in the **Federal Register**. It will include a discussion of any comments we receive and any amendments we are making to the rule as a result of the comments.

Executive Order 12866 and Regulatory Flexibility Act

This rule has been reviewed under Executive Order 12866. For this action, the Office of Management and Budget has waived its review process required by Executive Order 12866.

This action amends the tuberculosis regulations concerning the interstate movement of cattle and bison by reducing the designation of Michigan from an accredited-free State to an accredited-free (suspended) State. We are taking this action because tuberculosis has recently been confirmed in one beef herd in Michigan. This action is necessary to prevent the spread of tuberculosis in cattle and bison.

This emergency situation makes compliance with section 603 and timely compliance with section 604 of the Regulatory Flexibility Act (5 U.S.C. 601 *et seq.*) impracticable. If we determine that this rule will have a significant economic impact on a substantial number of small entities, then we will discuss the issues raised by section 604 of the Regulatory Flexibility Act in our Final Regulatory Flexibility Analysis.

Executive Order 12372

This program/activity is listed in the Catalog of Federal Domestic Assistance under No. 10.025 and is subject to Executive Order 12372, which requires intergovernmental consultation with State and local officials. (See 7 CFR part 3015, subpart V.)

Executive Order 12988

This rule has been reviewed under Executive Order 12988, Civil Justice Reform. This rule: (1) Preempts all State and local laws and regulations that are in conflict with this rule; (2) has no retroactive effect; and (3) does not require administrative proceedings before parties may file suit in court challenging this rule.

Paperwork Reduction Act

This rule contains no information collection or recordkeeping requirements under the Paperwork Reduction Act of 1995 (44 U.S.C. 3501 *et seq.*).

List of Subjects in 9 CFR Part 77

Animal diseases, Bison, Cattle, Reporting and recordkeeping requirements, Transportation, Tuberculosis.

Accordingly, 9 CFR part 77 is amended as follows:

PART 77—TUBERCULOSIS

1. The authority citation for part 77 continues to read as follows:

Authority: 21 U.S.C. 111, 114, 114a, 115–117, 120, 121, 134b, 134f; 7 CFR 2.22, 2.80, and 371.2(d).

§ 77.1 [Amended]

2. In § 77.1, in the definition for *Accredited-free state,* paragraph (2) is amended by removing the word ''Michigan,''.

3. In § 77.1, in the definition for *Accredited-free* (suspended) State, paragraph (2) is amended by removing the word ''None'' and adding the word ''Michigan'' in its place.

Done in Washington, DC, this 7th day of August 1998.

Joan M. Arnoldi,

Acting Administrator, Animal and Plant Health Inspection Service.

[FR Doc. 98–21763 Filed 8–12–98; 8:45 am]

BILLING CODE 3410–34–P

DEPARTMENT OF AGRICULTURE

Animal and Plant Health Inspection Service

9 CFR Part 78

[Docket No. 98–018–2]

Brucellosis in Cattle; State and Area Classifications; Georgia

AGENCY: Animal and Plant Health Inspection Service, USDA.

ACTION: Affirmation of interim rule as final rule.

SUMMARY: We are adopting as a final rule, without change, an interim rule that amended the brucellosis regulations concerning the interstate movement of cattle by changing the classification of Georgia from Class A to Class Free. We have determined that Georgia meets the standards for Class Free status. The interim rule was necessary to relieve certain restrictions on the interstate movement of cattle from Georgia.

EFFECTIVE DATE: The interim rule was effective on April 21, 1998.

FOR FURTHER INFORMATION CONTACT: Dr. R.T. Rollo, Jr., Staff Veterinarian, National Animal Health Programs, VS, APHIS, 4700 River Road Unit 43, Riverdale, MD 20737–1231, (301) 734–7709; or e-mail: rrollo@aphis.usda.gov.

SUPPLEMENTARY INFORMATION:

Background

In an interim rule effective and published in the **Federal Register** on April 21, 1998 (63 FR 19652–19653, Docket No. 98–018–1), we amended the brucellosis regulations in 9 CFR part 78 by removing Georgia from the list of Class A States in § 78.41(b) and adding it to the list of Class Free States in § 78.41(a).

Comments on the interim rule were required to be received on or before June 22, 1998. We did not receive any comments. The facts presented in the interim rule still provide a basis for the rule.

This action also affirms the information contained in the interim rule concerning Executive Order 12866 and the Regulatory Flexibility Act, Executive Orders 12372 and 12988, and the Paperwork Reduction Act.

Further, for this action, the Office of Management and Budget has waived the review process required by Executive Order 12866.

List of Subjects in 9 CFR Part 78

Animal diseases, Bison, Cattle, Hogs, Quarantine, Reporting and recordkeeping requirements, Transportation.

PART 78—BRUCELLOSIS

Accordingly, we are adopting as a final rule, without change, the interim rule that amended 9 CFR part 78 and that was published at 63 FR 19652–19653 on April 21, 1998.

Authority: 21 U.S.C. 111–114a–1, 114g, 115, 117, 120, 121, 123–126, 134b, and 134f; 7 CFR 2.22, 2.80, and 371.2(d).

Done in Washington, DC, this 7th day of August 1998.

Joan M. Arnoldi,

Acting Administrator, Animal and Plant Health Inspection Service.

[FR Doc. 98–21762 Filed 8–12–98; 8:45 am]

BILLING CODE 3410–34–P

DEPARTMENT OF THE TREASURY

Office of Thrift Supervision

12 CFR Part 563

[No. 98–76]

RIN 1550–AB16

Transactions With Affiliates; Reverse Repurchase Agreements

AGENCY: Office of Thrift Supervision, Treasury.

ACTION: Final rule.

SUMMARY: The Office of Thrift Supervision (OTS) is issuing a final rule to revise its regulations on transactions with affiliates. The final rule clarifies that OTS will treat reverse repurchase agreements, with one limited exception, as loans or other extensions of credit for the purposes of section 11(a)(1)(A) of the Home Owners' Loan Act (HOLA). Therefore, a savings association generally may not enter into a reverse repurchase agreement with an affiliate that is engaged in non-bank-holding company activities.

EFFECTIVE DATE: October 1, 1998.

FOR FURTHER INFORMATION CONTACT: Valerie J. Lithotomos, Counsel (Banking and Finance), (202) 906–6439; Karen A. Osterloh, Assistant Chief Counsel, (202) 906–6639, Regulations and Legislation Division, Chief Counsel's Office; or Donna Deale, Manager, (202) 906–7488, Supervision Policy, Office of Thrift Supervision, 1700 G Street, NW., Washington, DC 20552.

SUPPLEMENTARY INFORMATION:

I. Background

Section 11(a)(1) of the Home Owners' Loan Act (HOLA) applies the provisions of sections 23A and 23B of the Federal Reserve Act (FRA) to every savings association to the same extent as if the thrift were a member bank of the Federal Reserve System. Section 11(a)(1) also imposes several additional restrictions on a savings association's transactions with affiliates beyond those found in sections 23A and 23B of the FRA. Specifically, section 11(a)(1)(A) states that ''no loan or other extension of credit may be made to any affiliate unless that affiliate is engaged only in activities described in section 10(c)(2)(F)(i) of the HOLA.'' These activities include activities approved for bank holding companies by regulation, 12 CFR 225.28, or by case-by-case order of the Federal Reserve Board, 12 CFR 225.23. Thus, under section 11(a)(1)(A), a thrift may not make a loan or other extension of credit to an affiliate engaged in non-bank holding company activities (non-banking affiliate).

OTS is aware that there may be situations where savings associations may wish to enter into reverse repurchase agreements with their non-banking affiliates.[1] These arrangements raise the question whether a reverse repurchase agreement is a loan or other extension of credit for the purposes of the prohibition in section 11(a)(1)(A) of the HOLA.

On April 13, 1998, OTS published a notice of proposed rulemaking that would treat most reverse repurchase agreements as loans or other extensions of credit.[2] OTS noted that section 11(a)(1)(A) does not define ''loan or other extension of credit,'' and does not compel a legal conclusion that reverse repurchase agreements are, or are not, prohibited by statute.[3] Section 11, however, focuses on prohibiting transactions with non-banking affiliates that transfer credit and other risks to the thrift. As a general matter, a reverse repurchase agreement with a non-banking affiliate bears many of the economic characteristics of a loan or extension of credit to such an affiliate.[4] On this basis, OTS concluded that it was appropriate to treat these transactions as loans or extensions of credit under section 11(a)(1)(4).

Credit and other risks may be ameliorated significantly under certain circumstances. For example, in one arrangement recently reviewed by OTS, a thrift planned to sell United States Treasury securities to its holding company, subject to the thrift's agreement to repurchase the securities after a pre-determined period, several years later. Using reverse repurchase agreements, the savings association would also purchase United States Treasury securities from the holding company, subject to the holding company's agreement to repurchase on an overnight (or next-business-day) basis. The holding company, in effect, would use the overnight purchases to manage its available cash. At all times,

---

[1] A sale of assets subject to an agreement to repurchase is known as a ''reverse repurchase agreement'' when a bank or thrift is the purchaser of the assets. See M. Stigum, The Repo and Reverse Markets 4 (1989).

[2] 63 FR 17966 (April 13, 1998).

[3] In making this determination, OTS recognized that the definition of ''covered transaction'' under section 23A(b)(7) of the FRA lists ''a purchase of assets, including assets subject to an agreement to repurchase'' separately from ''a loan or extension of credit.'' *See* 12 U.S.C. 371c(b)(7)(A), (C). The fact that a reverse repurchase is considered to be an asset purchase, rather than an extension of credit under section 23A of the FRA, however, does not control the interpretation of section 11 of the HOLA.

Although section 23A and section 11(a)(1)(A) are both designed to prevent abuses by affiliates, the two statutes pursue this goal differently. Section 23A identifies a class of covered transactions that threaten prudent business relationships and places various restrictions on the transactions. Some restrictions apply to all transactions. Others apply only to certain types of covered transactions. (*E.g.*, loans and extensions of credit are subject to specific collateralization requirements. Purchases, including purchases that are subject to a repurchase agreement, are subject to a prohibition on the purchase of low quality assets.) Thus, to impose the appropriate restrictions, section 23A must distinguish between covered transactions that are reverse repurchase agreements and loans and covered transactions that are other extensions of credit.

Moreover, we note that section 11(a)(1)(A) of the HOLA does not specifically incorporate the definition of covered transaction under section 23A. In light of the numerous other cross-references to section 23A of the FRA that are contained in section 11 of the HOLA, it is reasonable to conclude that if Congress had intended to restrict ''loans or other extensions of credit'' only to those transactions that are loans and extensions of credit for the purposes of section 23A, it would have included a specific cross-reference to that statute.

[4] The savings association transfers funds to the affiliate, expecting to be repaid when the company repurchases the assets. The purchased assets essentially amount to collateral, since the savings association is required to return the assets at the time of repurchase. The savings association earns a pre-determined amount under the agreement. The principal risk to the savings association, its depositors and the deposit insurance fund is credit risk—the possibility that the affiliate will default on its obligation to make the repurchase. These types of agreements are generally considered the functional equivalent of a loan or extension of credit. *See* amendments to Federal Financial Institutions Examination Council Policy Statement on Repurchase Agreements of Depository Institutions with Securities Dealers and Others (''FFIEC Policy Statement''), 63 FR 6935 (February 11, 1998).

the savings association's obligation to repurchase securities under its agreement would exceed the holding company's obligation to repurchase securities under its agreement. In this example, risk is mitigated because the thrift is able to dispose of United States Treasury securities, a highly liquid, federally guaranteed form of collateral. The risk is further ameliorated by the offsetting repurchase agreements between the thrift and the affiliate under which the thrift is, at all times a net debtor to the affiliate. Accordingly, OTS proposed to exclude such a connected set of transactions from the regulatory prohibition.

II. Summary of Comment and Description of the Final Rule

The public comment period on the proposed rule closed on June 12, 1998. OTS received one comment from a law firm, on behalf of a client.

The commenter argued that section 11(a)(1)(A) of the HOLA does not provide OTS with legal authority to prohibit reverse repurchase agreements. As noted above, the preamble to the proposed rule recognized that section 11(a)(1)(A) of the HOLA, on its face, did not compel a legal conclusion that reverse repurchase agreements are, or are not, prohibited as loans or extensions of credit. It is, however, within OTS' purview to interpret and clarify the meaning of ''loan or other extension of credit'' in section 11 by regulation. Section 3(b)(2) of the HOLA authorizes the Director to ''prescribe such regulations . . . as the Director may determine to be necessary for carrying out [the HOLA] and all other laws within the Director's jurisdiction.[5] Thus, OTS has sufficient legal authority to issue this final rule interpreting the HOLA.

The commenter also responded to a question posed in the preamble to the proposed rule. The proposed regulation outlined the circumstances under which OTS would not treat a reverse repurchase agreement as a loan or other extension of credit under section 11(a)(1)(A) of the HOLA. Specifically, the reverse repurchase agreement must be part of a transaction or series of transactions meeting the following requirements: (1) There must be offsetting repurchase agreements between the thrift and the affiliate under which the thrift sells assets subject to an agreement to repurchase. At all times, when the agreements are netted, the thrift must be a net debtor to the affiliate; and (2) The assets purchased under the agreements must be United States Treasury securities, and the remaining term of securities purchased by the savings association must exceed the term of the reverse repurchase agreement. OTS specifically asked whether a cap should be placed on the length of time by which the remaining term of the securities may exceed the term of the reverse repurchase agreement. The commenter opposed the imposition of any cap.

OTS agrees with the commenter that a cap is unnecessary in light of the proposed requirement that the aggregate amount of the thrift's outstanding obligation to repurchase securities from the affiliate must at all times exceed the aggregate amount of the affiliate's outstanding obligation to repurchase securities from the thrift. *See* proposed § 563.41(a)(3)(iii). Given this requirement, the savings association will always be able to set off all of its repurchase obligations to the affiliate, if the affiliate is unable to repurchase securities from the thrift under the agreement. Thus, the savings association will not have any net credit exposure to its affiliate. The proposal has not been revised to include a cap.[6]

Today's final rule contains a technical clarification. Proposed § 563.41(a)(3)(i) stated that the savings association (or its subsidiary) must ensure ''its right to dispose of the securities at any time during the term of the agreement and upon default.'' OTS has revised the final rule to clarify that the savings association (or its subsidiary) must obtain possession or control of the underlying securities to ensure that it has the right to dispose of the securities. Other than this clarifying change, today's final rule is substantially identical to the April proposal.

III. Executive Order 12866

The Director of OTS has determined that this final rule does not constitute a ''significant regulatory action'' for the purposes of Executive Order 12866.

IV. Regulatory Flexibility Act Analysis

Pursuant to section 605(b) of the Regulatory Flexibility Act, OTS certifies that the final rule does not have a significant impact on a substantial number of small entities. The final rule prohibits all savings associations from entering into reverse repurchase agreements with non-banking affiliates, except under very limited circumstances. Thrifts currently engage in few reverse repurchase agreements with affiliates. OTS is not aware of any small savings association that is currently engaging in transactions that would be prohibited by this rule. Accordingly, a regulatory flexibility analysis is not required.

V. Unfunded Mandates Act of 1995

Section 202 of the Unfunded Mandates Reform Act of 1995, Pub. L. 104–4 (Unfunded Mandates Act), requires that an agency prepare a budgetary impact statement before promulgating a rule that includes a federal mandate that may result in expenditure by state, local, and tribal governments, in the aggregate, or by the private sector, of $100 million or more in any one year. If a budgetary impact statement is required, section 205 of the Unfunded Mandates Act also requires an agency to identify and consider a reasonable number of regulatory alternatives before promulgating a rule. OTS has determined that the final rule will not result in expenditures by state, local, or tribal governments or by the private sector of $100 million or more. Accordingly, this rulemaking is not subject to section 202 of the Unfunded Mandates Act.

List of Subjects in 12 CFR Part 563

Accounting, Advertising, Crime, Currency, Investments, Reporting and recordkeeping requirements, Savings associations, Securities, Surety bonds.

Accordingly, the Office of Thrift Supervision hereby amends part 563, chapter V, title 12, Code of Federal Regulations as set forth below:

PART 563—OPERATIONS

1. The authority citation for part 563 continues to read as follows:

Authority: 12 U.S.C. 375b, 1462, 1462a, 1463, 1464, 1467a, 1468, 1817, 1820, 1828, 3806; 42 U.S.C. 4106.

2. Section 563.41 is amended by revising paragraph (a)(3) to read as follows:

§ 563.41 Loans and other transactions with affiliates and subsidiaries.

(a) * * *

(3) A savings association (or its subsidiary) may not make a loan or other extension of credit to an affiliate, unless the affiliate is engaged solely in

[5] 12 U.S.C. 1462a. *See also* 12 U.S.C. 1463(a) and 1464.

[6] The commenter opposed any additional restrictions. However, if additional restrictions are to be imposed, the commenter suggested that OTS require that the aggregate market value of the securities purchased by the savings association under the reverse repurchase agreement must exceed, by a specified margin (*e.g.*, 102 percent), the amount of the affiliate's repurchase obligation under the reverse repurchase agreement. OTS agrees that further regulatory restrictions are unnecessary to mitigate the risks associated with reverse repurchase agreements. Moreover, under the FFIEC Policy Statement, cited above, we note that savings associations should comply with specific margin guidelines for such repurchase agreements.

activities described in 12 U.S.C. 1467a(c)(2)(F)(i), as defined in § 584.2–2 of this chapter. For the purposes of this paragraph (a)(3), a loan or other extension of credit includes a purchase of assets from an affiliate that is subject to the affiliate's agreement to repurchase the assets. Such a purchase of assets, however, will not be considered a loan or other extension of credit if the savings association (or its subsidiary) has entered into a transaction or series of transactions that meets all of the following requirements:

(i) The savings association (or its subsidiary) purchases United States Treasury securities from the affiliate, the affiliate agrees to repurchase the securities at the end of a stated term, the remaining term of the securities purchased by the savings association (or its subsidiary) exceeds the term of the affiliate's repurchase agreement, and the savings association (or its subsidiary) has possession or control of the securities and the right to dispose of the securities at any time during the term of the agreement and upon default.

(ii) The affiliate purchases United States Treasury securities from the savings association (or its subsidiary) and the savings association (or its subsidiary) agrees to repurchase the securities at the end of a stated term.

(iii) The aggregate amount of the affiliate's outstanding obligations to repurchase securities from the savings association (or its subsidiary) under the repurchase obligation described at paragraph (a)(3)(i) of this section, at all times, is less than the aggregate amount of the savings association's (or its subsidiary's) outstanding obligations to repurchase securities from the affiliate under paragraph (a)(3)(ii) of this section;

* * * * *

Dated: August 7, 1998.

By the Office of Thrift Supervision.

Ellen Seidman,

Director.

[FR Doc. 98–21756 Filed 8–12–98; 8:45 am]

BILLING CODE 6720–01–P

DEPARTMENT OF TRANSPORTATION

Federal Aviation Administration

14 CFR Part 39

[Docket No. 98–NM–154–AD; Amendment 39–10707; AD 98–17–05]

RIN 2120–AA64

Airworthiness Directives; Airbus Model A319, A320, A321, A330, and A340 Series Airplanes Equipped With AlliedSignal RIA–35B Instrument Landing System Receivers

AGENCY: Federal Aviation Administration, DOT.

ACTION: Final rule; request for comments.

SUMMARY: This amendment adopts a new airworthiness directive (AD) that is applicable to certain Airbus Model A319, A320, A321, A330, and A340 series airplanes. This action requires revising the Airplane Flight Manual (AFM) to require the flightcrew to discontinue use of any Instrument Landing System (ILS) receiver for which a certain caution message is displayed. This action also requires, for certain airplanes, replacing any faulty ILS receiver with a new, serviceable, or modified unit. This AD also provides for an optional terminating action for the AFM revisions. This amendment is prompted by a pilot's report of errors in the glide slope deviation provided by an ILS receiver. The actions specified in this AD are intended to detect and correct faulty ILS receivers and to ensure that the flightcrew is advised of the potential hazard of performing ILS approaches using a localizer deviation from a faulty ILS receiver, and advised of the procedures necessary to address that hazard. An erroneous localizer deviation could result in a landing outside the lateral boundary of the runway.

DATES: Effective August 28, 1998.

Comments for inclusion in the Rules Docket must be received on or before October 13, 1998.

ADDRESSES: Submit comments in triplicate to the Federal Aviation Administration (FAA), Transport Airplane Directorate, ANM–114, Attention: Rules Docket No. 98–NM–154–AD, 1601 Lind Avenue, SW., Renton, Washington 98055–4056.

The service information referenced in this AD may be obtained from AlliedSignal Aerospace, Technical Publications, Dept. 65–70, P.O. Box 52170, Phoenix, Arizona 85072–2170. This information may be examined at the FAA, Transport Airplane Directorate, 1601 Lind Avenue, SW., Renton, Washington.

FOR FURTHER INFORMATION CONTACT: Tim Backman, Aerospace Engineer, International Branch, ANM–116, FAA, Transport Airplane Directorate, 1601 Lind Avenue, SW., Renton, Washington 98055–4056; telephone (425) 227–2797; fax (425) 227–1149.

SUPPLEMENTARY INFORMATION: The FAA has received a report indicating that, during a test flight of a Boeing airplane, the flightcrew detected discrepancies in the glide slope deviation provided by one of the onboard Instrument Landing System (ILS) receivers. (The glide slope is the vertical flight path that an airplane is to follow when making an ILS landing. The display of the glide slope deviation indicates the position of the airplane relative to the glide slope and indicates to the flightcrew whether the airplane needs to be on a higher or lower glidepath to be on the normal approach flight path.) The discrepancies in the glide slope deviation provided by the discrepant ILS receiver resulted in the display showing that the airplane was on the glide slope, when the airplane was approximately one dot low on the glide slope (as determined from the data provided by the ILS receivers that were operating correctly). The flightcrew received no annunciation that there were discrepancies between the glide slope deviations being provided by the ILS receivers.

An investigation conducted by AlliedSignal, the manufacturer of the RIA–35B ILS receivers installed on the airplane, has revealed that the discrepancies in the glide slope deviation were caused by failure of an internal component of the ILS receiver due to that component's sensitivity to temperature.

The same ILS receiver also provides localizer deviation. (The display of the localizer deviation indicates the position of the airplane relative to the center line of the runway during an ILS landing.) An erroneous localizer deviation could result in a landing outside the lateral boundary of the runway. If a faulty ILS receiver provides a localizer deviation that contains errors that are not detected by the flightcrew, use of a single ILS receiver for ILS or localizer approaches could result in the pilot being directed to land the airplane outside the lateral boundary of the runway. If the localizer deviations generated by two of the ILS receivers onboard the airplane contain errors that are not detected by the flightcrew, during category II and III operations, the autopilot system may land the airplane

outside the lateral boundary of the runway.

Additionally, certain ground proximity warning systems (GPWS) and enhanced GPWS's use the glide slope deviation provided by ILS receivers. For these systems, if the ILS receiver used by the GPWS has experienced an unannunciated failure, there may be late or false GPWS alerts/callouts. Affected GPWS features may include sink rate alerts, glide slope deviation alerts, and altitude callouts.

The RIA–35B ILS receivers installed on certain Airbus Model A319, A320, A321, 330, and A340 series airplanes are the same type as those on the affected Boeing airplane. Therefore, those Airbus Model A319, A320, A321, A330, and A340 series airplanes may be subject to the same unsafe condition. Unlike the affected Boeing airplane, during most of the flight profile, the flightcrew on Airbus Model A319, A320, A321, A330, and A340 series airplanes would receive an annunciation of discrepancies between the glide slope or localizer deviations being provided by the ILS receivers. However, such annunciation is not available to the flightcrew during the approach and landing portions of the flight when the ILS is active (ILS tuned and receiving).

Explanation of Relevant Service Information

The FAA has reviewed and approved AlliedSignal Electronic and Avionics Systems Service Bulletin M–4431 (RIA–35B–34–7), Revision 1, dated May 1998, which describes procedures for modifying RIA–35B ILS receivers, part number (P/N) 066–50006–0202. The modification includes removing the radio frequency (RF) assembly; modifying the RF module by cutting two solder-side tracks, installing two 221-ohm resistors, and replacing components U8009 and U8206; and reinstalling the modified RF assembly. Once modified, the P/N of the ILS receiver is converted to P/N 066–50006–1202. Accomplishment of the actions specified in the service bulletin is intended to adequately address the identified unsafe condition.

Airbus has issued A319/320/321 Flight Manual Temporary Revision 4.02.00/03, A330 Flight Manual Temporary Revision 4.02.00/11, and A340 Flight Manual Temporary Revision 4.02.00/22; all dated March 30, 1998. These temporary revisions (TR's) specify that the pilot should discontinue use of an ILS receiver for which a certain caution message (''ILS 1 FAULT,'' ''ILS 2 FAULT,'' or ''ILS 1+2 FAULT'') is displayed intermittently or continuously on the electronic centralized aircraft monitor (ECAM) during any portion of the flight, until the affected unit is replaced with a new, serviceable, or modified unit.

U.S. Type Certification of the Airplanes

These airplane models are manufactured in France and are type certificated for operation in the United States under the provisions of section 21.29 of the Federal Aviation Regulations (14 CFR 21.29) and the applicable bilateral airworthiness agreement.

Explanation of Requirements of Rule

Since an unsafe condition has been identified that is likely to exist or develop on other airplanes of the same type design, this AD is being issued to detect and correct faulty ILS receivers and to ensure that the flightcrew is advised of the potential hazard of performing ILS approaches using a localizer deviation from a faulty ILS receiver, and advised of the procedures necessary to address that hazard. This AD requires a revision to the Limitations Section of the FAA-approved Airplane Flight Manual (AFM) to provide the flightcrew with explicit restrictions on operation in the event that a certain caution message is displayed intermittently or continuously on the ECAM during any portion of the flight. For cases where certain caution messages are displayed, this AD also requires replacement of the faulty ILS receiver with a new, serviceable, or modified unit. This AD also provides for an optional terminating action for the AFM revision described previously.

Explanation of the Applicability of the Rule

The FAA notes that its general policy is that, when an unsafe condition results from the installation of an appliance or other item that is installed in a limited number of airplane models, an AD is issued so that it is applicable to those airplanes, rather than the item. The reason for this is simple: making the AD applicable to the airplane models on which the item is installed ensures that operators of those airplanes will be notified directly of the unsafe condition and the action required to correct it. While it is assumed that an operator will know the models of airplanes that it operates, there is a potential that the operator will not know or be aware of specific items that are installed on its airplanes. Therefore, calling out the airplane model as the subject of the AD prevents ''unknowing non-compliance'' on the part of the operator.

Interim Action

This is considered to be interim action. The FAA is considering further rulemaking action to require replacement of all existing RIA–35B ILS receivers with modified parts, which would constitute terminating action for the AFM revision required by this AD action. However, the planned compliance time for such replacement is sufficiently long so that notice and opportunity for prior public comment will be practicable.

Differences Between the Rule and the Airbus Temporary AFM Revisions

The FAA is not referencing the Airbus TR's described previously as the appropriate source of service information.

Operators should note that, unlike the procedures described in the TR's, this AD would not permit use of a single ILS receiver for ILS or localizer approaches. The TR's allow use of a single source ILS receiver for ILS or localizer approaches even though the ILS receiver does not display caution messages on the ECAM during the approach and landing portions of the flight when the ILS is active. If there is a failure of a single ILS, or if the aircraft is dispatched with a single operative ILS, there is no way for the crew to identify a failure of the second ILS during these phases of flight. In such a case, the remaining ILS receiver may be providing erroneous localizer or glide slope deviation, and, therefore, a single ILS receiver should not be used for ILS or localizer approaches.

Operators also should note that, unlike the procedures described in the TR's, this AD would not permit an ILS approach to be continued if a discrepancy between the glide slope and/or localizer deviation provided by ILS receivers 1 and 2 is detected. The TR's allow the crew to continue the ILS or localizer approach, if the crew can immediately identify the faulty ILS. This determination is to be made by the crew, based on continuous monitoring and comparison of the glide slope and localizer deviations displayed from both ILS receivers. However, should a discrepancy be detected during this continuous monitoring and comparison procedure, it may not be apparent to the crew which ILS receiver is providing correct glide slope and/or localizer deviation. For this reason, during an ILS or localizer approach, if the crew detects a discrepancy between the glide slope and/or localizer deviation provided by the two ILS receivers, the ILS approach should be immediately interrupted.

Determination of Rule's Effective Date

Since a situation exists that requires the immediate adoption of this regulation, it is found that notice and opportunity for prior public comment hereon are impracticable, and that good cause exists for making this amendment effective in less than 30 days.

Comments Invited

Although this action is in the form of a final rule that involves requirements affecting flight safety and, thus, was not preceded by notice and an opportunity for public comment, comments are invited on this rule. Interested persons are invited to comment on this rule by submitting such written data, views, or arguments as they may desire. Communications shall identify the Rules Docket number and be submitted in triplicate to the address specified under the caption **ADDRESSES.** All communications received on or before the closing date for comments will be considered, and this rule may be amended in light of the comments received. Factual information that supports the commenter's ideas and suggestions is extremely helpful in evaluating the effectiveness of the AD action and determining whether additional rulemaking action would be needed.

Comments are specifically invited on the overall regulatory, economic, environmental, and energy aspects of the rule that might suggest a need to modify the rule. All comments submitted will be available, both before and after the closing date for comments, in the Rules Docket for examination by interested persons. A report that summarizes each FAA-public contact concerned with the substance of this AD will be filed in the Rules Docket.

Commenters wishing the FAA to acknowledge receipt of their comments submitted in response to this rule must submit a self-addressed, stamped postcard on which the following statement is made: ''Comments to Docket Number 98–NM–154–AD.'' The postcard will be date stamped and returned to the commenter.

Regulatory Impact

The regulations adopted herein will not have substantial direct effects on the States, on the relationship between the national government and the States, or on the distribution of power and responsibilities among the various levels of government. Therefore, in accordance with Executive Order 12612, it is determined that this final rule does not have sufficient federalism implications to warrant the preparation of a Federalism Assessment.

The FAA has determined that this regulation is an emergency regulation that must be issued immediately to correct an unsafe condition in aircraft, and that it is not a ''significant regulatory action'' under Executive Order 12866. It has been determined further that this action involves an emergency regulation under DOT Regulatory Policies and Procedures (44 FR 11034, February 26, 1979). If it is determined that this emergency regulation otherwise would be significant under DOT Regulatory Policies and Procedures, a final regulatory evaluation will be prepared and placed in the Rules Docket. A copy of it, if filed, may be obtained from the Rules Docket at the location provided under the caption **ADDRESSES.**

List of Subjects in 14 CFR Part 39

Air transportation, Aircraft, Aviation safety, Safety.

Adoption of the Amendment

Accordingly, pursuant to the authority delegated to me by the Administrator, the Federal Aviation Administration amends part 39 of the Federal Aviation Regulations (14 CFR part 39) as follows:

PART 39—AIRWORTHINESS DIRECTIVES

1. The authority citation for part 39 continues to read as follows:

Authority: 49 U.S.C. 106(g), 40113, 44701.

§ 39.13 [Amended]

2. Section 39.13 is amended by adding the following new airworthiness directive:

98–17–05 Airbus Industrie: Amendment 39–10707. Docket 98–NM–154–AD.

Applicability: Model A319, A320, A321, A330, and A340 series airplanes; equipped with AlliedSignal RIA–35B Instrument Landing System (ILS) receivers, part number (P/N) 066–50006–0202; certificated in any category.

Note 1: This AD applies to each airplane identified in the preceding applicability provision, regardless of whether it has been modified, altered, or repaired in the area subject to the requirements of this AD. For airplanes that have been modified, altered, or repaired so that the performance of the requirements of this AD is affected, the owner/operator must request approval for an alternative method of compliance in accordance with paragraph (d) of this AD. The request should include an assessment of the effect of the modification, alteration, or repair on the unsafe condition addressed by this AD; and, if the unsafe condition has not been eliminated, the request should include specific proposed actions to address it.

Compliance: Required as indicated, unless accomplished previously.

To detect and correct faulty ILS receivers and to ensure that the flightcrew is advised of the potential hazard of performing ILS approaches using a localizer deviation from a faulty ILS receiver, and advised of the procedures necessary to address that hazard, accomplish the following:

(a) Within 10 days after the effective date of this AD, accomplish the requirements of paragraphs (a)(1) and (a)(2) of this AD.

(1) Revise the Limitations Section of the FAA-approved Airplane Flight Manual (AFM) to include the following statement. This may be accomplished by inserting a copy of this AD into the AFM.

''Instrument Landing (ILS) 1(2) Fault

If 'ILS 1(2) FAULT,' electronic centralized aircraft monitor (ECAM) caution, is triggered at any time during the flight, the affected ILS receiver must be considered as no longer available until it is replaced, and the flight crew must make the appropriate entry in the aircraft maintenance log prior to the next flight.

During an ILS or LOC approach, the glide slope deviation and localizer deviation from ILS receivers 1 and 2 must be monitored and compared. If a discrepancy between the glide slope deviation and/or localizer deviation provided by ILS receivers 1 and 2 is experienced, interrupt the ILS approach.

Do not conduct ILS or LOC approaches using a single ILS receiver.

If ILS 1 has experienced an unannunciated failure there may be late or false ground proximity warning system (GPWS) alerts/callouts. Affected GPWS features may include sink rate alerts, glide slope deviation alerts, and altitude callouts.''

(2) Following accomplishment of the AFM revision required by paragraph (a)(1) of this AD, if a caution message reading ''ILS 1 FAULT,'' ''ILS 2 FAULT,'' or ''ILS 1+2 FAULT'' is displayed intermittently or continuously on ECAM during any portion of any flight: Within 10 days after the message is first displayed, remove the faulty ILS receiver and install either a new or serviceable part that has the same P/N as the ILS receiver that was removed from the airplane or a part that has been modified in accordance with AlliedSignal Electronic and Avionics Systems Service Bulletin M–4431 (RIA–35B–34–7), Revision 1, dated May 1998.

Note 2: The ECAM messages described in paragraph (a)(2) of this AD, when displayed to the pilot, are normally preceded by ''NAV'' indicating a fault in the navigation system.

(b) Replacement of all RIA–35B ILS receivers, P/N 066–50006–0202, with

RIA–35B ILS receivers that have been modified in accordance with AlliedSignal Electronic and Avionics Systems Service Bulletin M–4431 (RIA–35B–34–7), Revision 1, dated May 1998; on which the P/N's have been converted to 066–50006–1202; constitutes terminating action for the requirements of this AD. After the replacement has been accomplished, the limitations required by paragraph (a)(1) may be removed from the AFM.

Note 3: Modification of all AlliedSignal RIA–35B ILS receivers, P/N 066–50006–0202, accomplished prior to the effective date of this AD in accordance with AlliedSignal

Electronic and Avionics Systems Service Bulletin M–4431 (RIA–35B–34–7), dated April 1998; is considered acceptable for compliance with the modification specified in this amendment.

(c) As of the effective date of this AD, no person shall install on any airplane an AlliedSignal RIA–35B ILS receiver, P/N 066–50006–0202, that has been found to be discrepant [that is, an ILS receiver for which one of the caution messages specified in paragraph (a)(2) of this AD was displayed on the ECAM] unless the discrepancy has been corrected by modifying the ILS receiver in accordance with AlliedSignal Electronic and Avionics Systems Service Bulletin M–4431 (RIA–35B–34–7), Revision 1, dated May 1998.

(d) An alternative method of compliance or adjustment of the compliance time that provides an acceptable level of safety may be used if approved by the Manager, International Branch, ANM–116, FAA, Transport Airplane Directorate. Operators shall submit their requests through an appropriate FAA Principal Operations Inspector or Principal Avionics Inspector, who may add comments and then send it to the Manager, International Branch, ANM–116.

Note 4: Information concerning the existence of approved alternative methods of compliance with this AD, if any, may be obtained from the International Branch, ANM–116.

(e) Special flight permits may be issued in accordance with sections 21.197 and 21.199 of the Federal Aviation Regulations (14 CFR 21.197 and 21.199) to operate the airplane to a location where the requirements of this AD can be accomplished.

(f) This amendment becomes effective on August 28, 1998.

Issued in Renton, Washington, on August 6, 1998.

Darrell M. Pederson,

Acting Manager, Transport Airplane Directorate, Aircraft Certification Service.

[FR Doc. 98–21656 Filed 8–12–98; 8:45 am]

BILLING CODE 4910–13–P

DEPARTMENT OF TRANSPORTATION

Federal Aviation Administration

14 CFR Part 39

[Docket No. 98–NM–128–AD; Amendment 39–10711; AD 98–17–09]

RIN 2120–AA64

Airworthiness Directives; Airbus Model A310 and A300–600 Series Airplanes

AGENCY: Federal Aviation Administration, DOT.

ACTION: Final rule.

SUMMARY: This amendment supersedes an existing airworthiness directive (AD), applicable to all Airbus Model A310 and A300–600 series airplanes, that currently requires a revision of the Airplane Flight Manual that warns the flightcrew of certain consequences associated with overriding the autopilot when it is in the pitch control axis. That AD also requires modification of certain flight control computers, and a modification to the autopilot. For certain airplanes, that AD also requires repetitive operational testing of the modified autopilot to determine if the disconnect function operates properly, and repair, if necessary. This amendment adds a new requirement to accomplish those repetitive operational tests on other airplanes. This amendment is prompted by issuance of mandatory continuing airworthiness information by a foreign civil airworthiness authority. The actions specified by this AD are intended to prevent an out-of-trim condition between the trimmable horizontal stabilizer and the elevator, which could result in severely reduced controllability of the airplane.

DATES: Effective September 17, 1998.

The incorporation by reference of certain publications, as listed in the regulations, was approved previously by the Director of the Federal Register as of May 23, 1996 (61 FR 16873, April 18, 1996).

The incorporation by reference of certain other publications, as listed in the regulations, was approved previously by the Director of the Federal Register as of October 3, 1997 (62 FR 45710, August 29, 1997).

ADDRESSES: The service information referenced in this AD may be obtained from Airbus Industrie, 1 Rond Point Maurice Bellonte, 31707 Blagnac Cedex, France. This information may be examined at the Federal Aviation Administration (FAA), Transport Airplane Directorate, Rules Docket, 1601 Lind Avenue, SW., Renton, Washington; or at the Office of the Federal Register, 800 North Capitol Street, NW., suite 700, Washington, DC.

FOR FURTHER INFORMATION CONTACT: Norman B. Martenson, Manager, International Branch, ANM–116, FAA, Transport Airplane Directorate, 1601 Lind Avenue, SW., Renton, Washington 98055–4056; telephone (425) 227–2110; fax (425) 227–1149.

SUPPLEMENTARY INFORMATION: A proposal to amend part 39 of the Federal Aviation Regulations (14 CFR part 39) by superseding AD 97–18–09, amendment 39–10119 (62 FR 45710, August 29, 1997), which is applicable to all Airbus Model A310 and A300–600 series airplanes, was published in the **Federal Register** on June 3, 1998 (63 FR 30150). The action proposed to supersede AD 97–18–09 to continue to require a revision of the Airplane Flight Manual that warns the flightcrew of certain consequences associated with overriding the autopilot when it is in the pitch control axis. It also proposed to continue to require modification of certain flight control computers, and a modification to the autopilot. For certain airplanes, that AD also proposed to continue to require repetitive operational testing of the modified autopilot to determine if the disconnect function operates properly, and repair, if necessary. The action also proposed to add a new requirement to accomplish those repetitive operational tests on other airplanes.

Comments

Interested persons have been afforded an opportunity to participate in the making of this amendment. Due consideration has been given to the single comment received.

The commenter supports the proposed rule.

Conclusion

After careful review of the available data, including the comment noted above, the FAA has determined that air safety and the public interest require the adoption of the rule as proposed.

Cost Impact

There are approximately 94 airplanes of U.S. registry that will be affected by this AD.

The AFM revision that was required previously by AD 96–08–07, amendment 39–9573, and is retained in this AD, takes approximately 1 work hour per airplane to accomplish, at an average labor rate of $60 per work hour. Based on these figures, the cost impact of the currently required AFM revision on U.S. operators is estimated to be $5,640, or $60 per airplane.

The modification of certain FCC's that was required previously by AD 94–21–07, amendment 39–9049, and is retained in this AD, takes approximately 1 work hour per airplane to accomplish, at an average labor rate of $60 per work hour. Required parts will be supplied by the manufacturer at no cost to operators. Based on these figures, the cost impact of the currently required modification of FCC's on U.S. operators is estimated to be $5,640, or $60 per airplane.

The modification of the autopilot that is currently required by AD 97–18–09, and retained in this AD, takes approximately 25 work hours per airplane to accomplish, at an average labor rate of $60 per work hour. Required parts cost approximately $1,578 per airplane. Based on these

figures, the cost impact of the currently required modification of the autopilot on U.S. operators is estimated to be $289,332, or $3,078 per airplane.

The operational test that is currently required by AD 97–18–09, and retained in this AD, takes approximately 7 work hours per airplane, per test cycle, to accomplish, at an average labor rate of $60 per work hour. Based on these figures, the cost impact of the currently required operational test requirement on U.S. operators is estimated to be $39,480, or $420 per airplane, per test cycle.

The cost impact figures discussed above are based on assumptions that no operator has yet accomplished any of the requirements of this AD action, and that no operator would accomplish those actions in the future if this AD were not adopted.

Regulatory Impact

The regulations adopted herein will not have substantial direct effects on the States, on the relationship between the national government and the States, or on the distribution of power and responsibilities among the various levels of government.

Therefore, in accordance with Executive Order 12612, it is determined that this final rule does not have sufficient federalism implications to warrant the preparation of a Federalism Assessment.

For the reasons discussed above, I certify that this action (1) is not a ''significant regulatory action'' under Executive Order 12866; (2) is not a ''significant rule'' under DOT Regulatory Policies and Procedures (44 FR 11034, February 26, 1979); and (3) will not have a significant economic impact, positive or negative, on a substantial number of small entities under the criteria of the Regulatory Flexibility Act. A final evaluation has been prepared for this action and it is contained in the Rules Docket. A copy of it may be obtained from the Rules Docket at the location provided under the caption **ADDRESSES.**

List of Subjects in 14 CFR Part 39

Air transportation, Aircraft, Aviation safety, Incorporation by reference, Safety.

Adoption of the Amendment

Accordingly, pursuant to the authority delegated to me by the Administrator, the Federal Aviation Administration amends part 39 of the Federal Aviation Regulations (14 CFR part 39) as follows:

PART 39—AIRWORTHINESS DIRECTIVES

1. The authority citation for part 39 continues to read as follows:

Authority: 49 U.S.C. 106(g), 40113, 44701.

§ 39.13 [Amended]

2. Section 39.13 is amended by removing amendment 39–10119 (62 FR 45710, August 29, 1997), and by adding a new airworthiness directive (AD), amendment 39–10711, to read as follows:

98–17–09 Airbus Industrie: Amendment 39–10711. Docket 98–NM–128–AD. Supersedes AD 97–18–09, Amendment 39–10119.

Applicability: All Model A310 and A300–600 series airplanes, certificated in any category.

Note 1: This AD applies to each airplane identified in the preceding applicability provision, regardless of whether it has been modified, altered, or repaired in the area subject to the requirements of this AD. For airplanes that have been modified, altered, or repaired so that the performance of the requirements of this AD is affected, the owner/operator must request approval for an alternative method of compliance in accordance with paragraph (f) of this AD. The request should include an assessment of the effect of the modification, alteration, or repair on the unsafe condition addressed by this AD; and, if the unsafe condition has not been eliminated, the request should include specific proposed actions to address it.

Compliance: Required as indicated, unless accomplished previously.

To prevent an out-of-trim condition between the trimmable horizontal stabilizer and the elevator, which could result in severely reduced controllability of the airplane, accomplish the following:

Restatement of Actions required by AD 96–08–07, Amendment 39–9573:

(a) Within 10 days after May 23, 1996 (the effective date of AD 96–08–07, amendment 39–9573), revise the Limitations Section of the FAA-approved Airplane Flight Manual (AFM) to include the information contained in paragraph (a)(1) or (a)(2) of this AD, as applicable. This may be accomplished by inserting a copy of this AD in the AFM. The AFM limitation required by AD 94–21–07, amendment 39–9049, may be removed following accomplishment of the requirements of this paragraph.

(1) For airplanes on which the flight control computers (FCC) have not been modified in accordance with the requirements of paragraph (b) of this AD:

''Overriding the autopilot (AP) in pitch axis does not cancel the AP autotrim when LAND TRACK mode [green LAND on both Flight Mode Annunciators (FMA)] or GO-AROUND mode is engaged. In these modes, if the pilot counteracts the AP, the autotrim will trim against pilot input. This could lead to a severe out-of-trim situation in a critical phase of flight.''

(2) For airplanes on which the FCC's have been modified in accordance with the requirements of paragraph (b) of this AD:

''Overriding the autopilot (AP) in pitch axis does not cancel the AP autotrim when LAND TRACK mode (green LAND on both FMA's) is engaged, or GO-AROUND mode is engaged below 400 feet radio altitude (RA). In these modes, if the pilot counteracts the AP, the autotrim will trim against pilot input. This could lead to a severe out-of-trim situation in a critical phase of flight.''

Restatement of Actions Required by AD 94–21–07, Amendment 39–9049:

(b) For airplanes equipped with FCC's having either part number (P/N) B470ABM1 (for Model A310 series airplanes) or B470AAM1 (for Model A300–600 series airplanes): Within 60 days after November 2, 1994 (the effective date of AD 94–21–07, amendment 39–9049), modify the FCC's in accordance with Airbus Service Bulletin A310–22–2036, dated December 14, 1993 (for Model A310 series airplanes), or Airbus Service Bulletin A300–22–6021, Revision 1, dated December 24, 1993 (for Model A300–600 series airplanes), as applicable.

(c) As of November 2, 1994, no person shall install a FCC having either P/N B470ABM1 or B470AAM1 on any airplane.

Restatement of Actions Required by AD 97–18–09, Amendment 39–10119:

(d) For airplanes on which Modification No. 11454 [reference Airbus Service Bulletin A310–22–2044, Revision 1 (for Model A310 series airplanes), or Airbus Service Bulletin A300–22–6032, Revision 1 (for Model A300–600 series airplanes)] has not been installed: Accomplish paragraphs (d)(1), (d)(2)(i), and (d)(2)(ii) of this AD.

(1) Within 24 months after October 3, 1997 (the effective date of AD 97–18–09, amendment 39–10119), modify the autopilot in accordance with Airbus Service Bulletin A310–22–2044, Revision 1, dated January 8, 1997 (for Model A310 series airplanes), or Service Bulletin A300–22–6032, Revision 1, dated January 8, 1997 (for Model A300–600 series airplanes), as applicable. The requirements of paragraph (a) of AD 95–25–09, amendment 39–9455, if applicable, must be accomplished prior to or at the same time the requirements of this paragraph are accomplished.

(2) Prior to further flight following accomplishment of paragraph (d)(1) of this AD:

(i) Remove the AFM revisions required by paragraph (a) of this AD; and

(ii) Perform an operational test of this autopilot disconnect feature to determine that it operates properly, in accordance with Airbus Service Bulletin A310–22–2047, dated July 16, 1996 (for Model A310 series airplanes), or Service Bulletin A300–22–6035, dated July 16, 1996 (for Model A300–600 series airplanes), as applicable. If any discrepancy is detected, prior to further flight, repair it in accordance with the applicable service bulletin. Repeat this test thereafter at intervals not to exceed 18 months.

New Actions Required by This AD

(e) For airplanes on which Modification No. 11454 was installed during production: Within 18 months after the date of manufacture of the airplane, or within 6 months after the effective date of this AD, whichever occurs later, accomplish the actions specified in paragraph (d)(2)(ii) of this AD.

(f) An alternative method of compliance or adjustment of the compliance time that provides an acceptable level of safety may be used if approved by the Manager, International Branch, ANM–116, FAA, Transport Airplane Directorate. Operators shall submit their requests through an appropriate FAA Principal Maintenance Inspector, who may add comments and then send it to the Manager, International Branch, ANM–116.

Note 2: Information concerning the existence of approved alternative methods of compliance with this AD, if any, may be obtained from the International Branch, ANM–116.

(g) Special flight permits may be issued in accordance with sections 21.197 and 21.199 of the Federal Aviation Regulations (14 CFR 21.197 and 21.199) to operate the airplane to a location where the requirements of this AD can be accomplished.

(h) Except as provided by paragraph (a) of this AD, the actions shall be done in accordance with the following Airbus service bulletins.

(1) The incorporation by reference of Airbus Service Bulletin A310–22–2036, dated December 14, 1993; and Airbus Service Bulletin A300–22–6021, Revision 1, dated December 24, 1993, was approved previously by the Director of the Federal Register, in accordance with 5 U.S.C. 552(a) and 1 CFR part 51, as of May 23, 1996 (61 FR 16873, April 18, 1996).

(2) The incorporation by reference of Airbus Service Bulletin A310–22–2044, Revision 1, dated January 8, 1997; Airbus Service Bulletin A300–22–6032, Revision 1, dated January 8, 1997; Airbus Service Bulletin A310–22–2047, dated July 16, 1996; and Airbus Service Bulletin A300–22–6035, dated July 16, 1996; as applicable; was approved previously by the Director of the Federal Register as of October 3, 1997 (62 FR 45710, August 29, 1997).

(3) Copies may be obtained from Airbus Industrie, 1 Rond Point Maurice Bellonte, 31707 Blagnac Cedex, France. Copies may be inspected at the FAA, Transport Airplane Directorate, 1601 Lind Avenue, SW., Renton, Washington; or at the Office of the Federal Register, 800 North Capitol Street, NW., suite 700, Washington, DC.

Note 3: The subject of this AD is addressed in French airworthiness directive 97–373–237(B), dated December 3, 1997.

(i) This amendment becomes effective on September 17, 1998.

Issued in Renton, Washington, on August 6, 1998.

Darrell M. Pederson,

Acting Manager, Transport Airplane Directorate, Aircraft Certification Service.

[FR Doc. 98–21655 Filed 8–12–98; 8:45 am]

BILLING CODE 4910–13–U

DEPARTMENT OF TRANSPORTATION

Federal Aviation Administration

14 CFR Part 39

[Docket No. 98–SW–25–AD; Amendment 39–10712; AD 98–12–19]

RIN 2120–AA64

Airworthiness Directives; Robinson Helicopter Company (RHC) Model R44 Helicopters

AGENCY: Federal Aviation Administration, DOT.

ACTION: Final rule; request for comments.

SUMMARY: This document publishes in the **Federal Register** an amendment adopting Airworthiness Directive (AD) 98–12–19 which was sent previously to all known U.S. owners and operators of RHC Model R44 helicopters by individual letters. This AD requires, within 5 hours TIS, a dye penetrant inspection of each main rotor blade skin (blade skin) around both inboard trim tab alignment rivet holes. Thereafter, a repetitive visual inspection of the blade skin around both inboard trim tab alignment rivet holes is required prior to the first flight of each day or at intervals not to exceed 5 hours TIS, whichever occurs first. This amendment is prompted by an incident in which a crack in the main rotor blade resulted in a forced landing. Subsequent investigations revealed that the manufacturing process utilized to drill the trim tab alignment rivet holes in the blade skin can allow a fatigue crack to originate at these holes and propagate in the skin. This condition, if not corrected, could result in failure of the main rotor blade and subsequent loss of control of the helicopter.

DATES: Effective August 28, 1998, to all persons except those persons to whom it was made immediately effective by priority letter AD 98–12–19, issued on June 2, 1998, which contained the requirements of this amendment.

Comments for inclusion in the Rules Docket must be received on or before October 13, 1998.

ADDRESSES: Submit comments in triplicate to the Federal Aviation Administration (FAA), Office of the Regional Counsel, Southwest Region, Attention: Rules Docket No. 98–SW–25–AD, 2601 Meacham Blvd., Room 663, Fort Worth, Texas 76137.

FOR FURTHER INFORMATION CONTACT: Mr. Fred Guerin, Aerospace Engineer, FAA, Los Angeles Aircraft Certification Office, Airframe Branch, 3960 Paramount Blvd., Lakewood, California 90712, telephone (562) 627–5232, fax (562) 627–5210.

SUPPLEMENTARY INFORMATION: On June 2, 1998, the FAA issued priority letter AD 98–12–19, applicable to RHC Model R44 helicopters, which requires, within 5 hours TIS, a dye penetrant inspection of the blade skin around both inboard trim tab alignment rivet holes. Thereafter, a repetitive visual inspection of the blade skin around both inboard trim tab alignment rivet holes is required prior to the first flight of each day or at intervals not to exceed 5 hours TIS, whichever occurs first. If a crack is found, this AD requires replacing the main rotor blade with an airworthy main rotor blade before further flight. That action was prompted by an incident in which a pilot heard a loud noise and felt severe vibrations while hovering, resulting in a forced landing. Upon inspection, a crack was found in a main rotor blade that started at the mid-span inboard trim tab and ran chordwise to the spar where it turned along the spar for about an inch. The crack originated from a trim tab alignment rivet hole in the blade skin. Subsequent investigations revealed that the manufacturing process utilized to drill the trim tab alignment rivet holes in the blade skin can allow a fatigue crack to originate at these holes and propagate in the skin. This condition, if not corrected, could result in failure of the main rotor blade and subsequent loss of control of the helicopter.

Since the unsafe condition described is likely to exist or develop on other RHC Model R44 helicopters of the same type design, the FAA issued priority letter AD 98–12–19 to prevent failure of the main rotor blade and subsequent loss of control of the helicopter. The AD requires, within 5 hours TIS, a dye penetrant inspection of the blade skin around both inboard trim tab alignment rivet holes. Thereafter, a repetitive visual inspection of the blade skin around both inboard trim tab alignment rivet holes is required prior to the first flight of each day or at intervals not to exceed 5 hours TIS, whichever occurs first. If a crack is found, this AD requires replacing the main rotor blade with an airworthy main rotor blade before further flight. Installing a set of main rotor blades, P/N C016–2, constitutes terminating action for the requirements of this AD.

Since it was found that immediate corrective action was required, notice and opportunity for prior public comment thereon were impracticable and contrary to the public interest, and good cause existed to make the AD effective immediately by individual letters issued on June 2, 1998, to all

known U.S. owners and operators of RHC Model R44 helicopters. These conditions still exist, and the AD is hereby published in the **Federal Register** as an amendment to section 39.13 of the Federal Aviation Regulations (14 CFR 39.13) to make it effective to all persons.

The FAA estimates that 96 helicopters of U.S. registry will be affected by this AD, that it will take approximately 2 work hours per helicopter to inspect the blade skin and 10 work hours per helicopter to replace both main rotor blades and that the average labor rate is $60 per work hour. Required parts will cost approximately $10,000 per main rotor blade set. Based on these figures, the total cost impact of the AD on U.S. operators is estimated to be $1,029,120, assuming one inspection and replacement of both main rotor blades on all helicopters with blades which would terminate the requirements of this AD.

Comments Invited

Although this action is in the form of a final rule that involves requirements affecting flight safety and, thus, was not preceded by notice and an opportunity for public comment, comments are invited on this rule. Interested persons are invited to comment on this rule by submitting such written data, views, or arguments as they may desire. Communications should identify the Rules Docket number and be submitted in triplicate to the address specified under the caption **ADDRESSES.** All communications received on or before the closing date for comments will be considered, and this rule may be amended in light of the comments received. Factual information that supports the commenter's ideas and suggestions is extremely helpful in evaluating the effectiveness of the AD action and determining whether additional rulemaking action would be needed.

Comments are specifically invited on the overall regulatory, economic, environmental, and energy aspects of the rule that might suggest a need to modify the rule. All comments submitted will be available, both before and after the closing date for comments, in the Rules Docket for examination by interested persons. A report that summarizes each FAA-public contact concerned with the substance of this AD will be filed in the Rules Docket.

Commenters wishing the FAA to acknowledge receipt of their comments submitted in response to this rule must submit a self-addressed, stamped postcard on which the following statement is made: ''Comments to Docket No. 98–SW–25–AD.'' The postcard will be date stamped and returned to the commenter.

The regulations adopted herein will not have substantial direct effects on the States, on the relationship between the national government and the States, or on the distribution of power and responsibilities among the various levels of government. Therefore, in accordance with Executive Order 12612, it is determined that this final rule does not have sufficient federalism implications to warrant the preparation of a Federalism Assessment.

The FAA has determined that this regulation is an emergency regulation that must be issued immediately to correct an unsafe condition in aircraft, and that it is not a ''significant regulatory action'' under Executive Order 12866. It has been determined further that this action involves an emergency regulation under DOT Regulatory Policies and Procedures (44 FR 11034, February 26, 1979). If it is determined that this emergency regulation otherwise would be significant under DOT Regulatory Policies and Procedures, a final regulatory evaluation will be prepared and placed in the Rules Docket. A copy of it, if filed, may be obtained from the Rules Docket at the location provided under the caption **ADDRESSES.**

List of Subjects in 14 CFR Part 39

Air transportation, Aircraft, Aviation safety, Safety.

Adoption of the Amendment

Accordingly, pursuant to the authority delegated to me by the Administrator, the Federal Aviation Administration amends part 39 of the Federal Aviation Regulations (14 CFR part 39) as follows:

PART 39—AIRWORTHINESS DIRECTIVES

1. The authority citation for part 39 continues to read as follows:

Authority: 49 U.S.C. 106(g), 40113, 44701.

§ 39.13 [Amended]

2. Section 39.13 is amended by adding a new airworthiness directive to read as follows:

98–12–19 Robinson Helicopter Company: Amendment 39–10712. Docket No. 98–SW–25–AD.

Applicability: Model R44 helicopters, serial numbers (S/N) 0002 thru 0486, with main rotor blades, part number (P/N) C016–1, installed, certificated in any category.

Note 1: This AD applies to each helicopter identified in the preceding applicability provision, regardless of whether it has been modified, altered, or repaired in the area subject to the requirements of this AD. For helicopters that have been modified, altered, or repaired so that the performance of the requirements of this AD is affected, the owner/operator must use the authority provided in paragraph (f) to request approval from the FAA. This approval may address either no action, if the current configuration eliminates the unsafe condition, or different actions necessary to address the unsafe condition described in this AD. Such a request should include an assessment of the effect of the changed configuration on the unsafe condition addressed by this AD. In no case does the presence of any modification, alteration, or repair remove any helicopter from the applicability of this AD.

Compliance: Required as indicated, unless accomplished previously.

To detect main rotor blade skin fatigue cracks which originate from the inboard trim tab alignment rivet holes, that could result in failure of the main rotor blade and subsequent loss of control of the helicopter, accomplish the following:

(a) Within the next five hours time-in-service (TIS), perform a dye penetrant inspection of the blade skin around both inboard trim tab alignment rivets as follows, referring to Figure 1.

BILLING CODE 4910–13–U

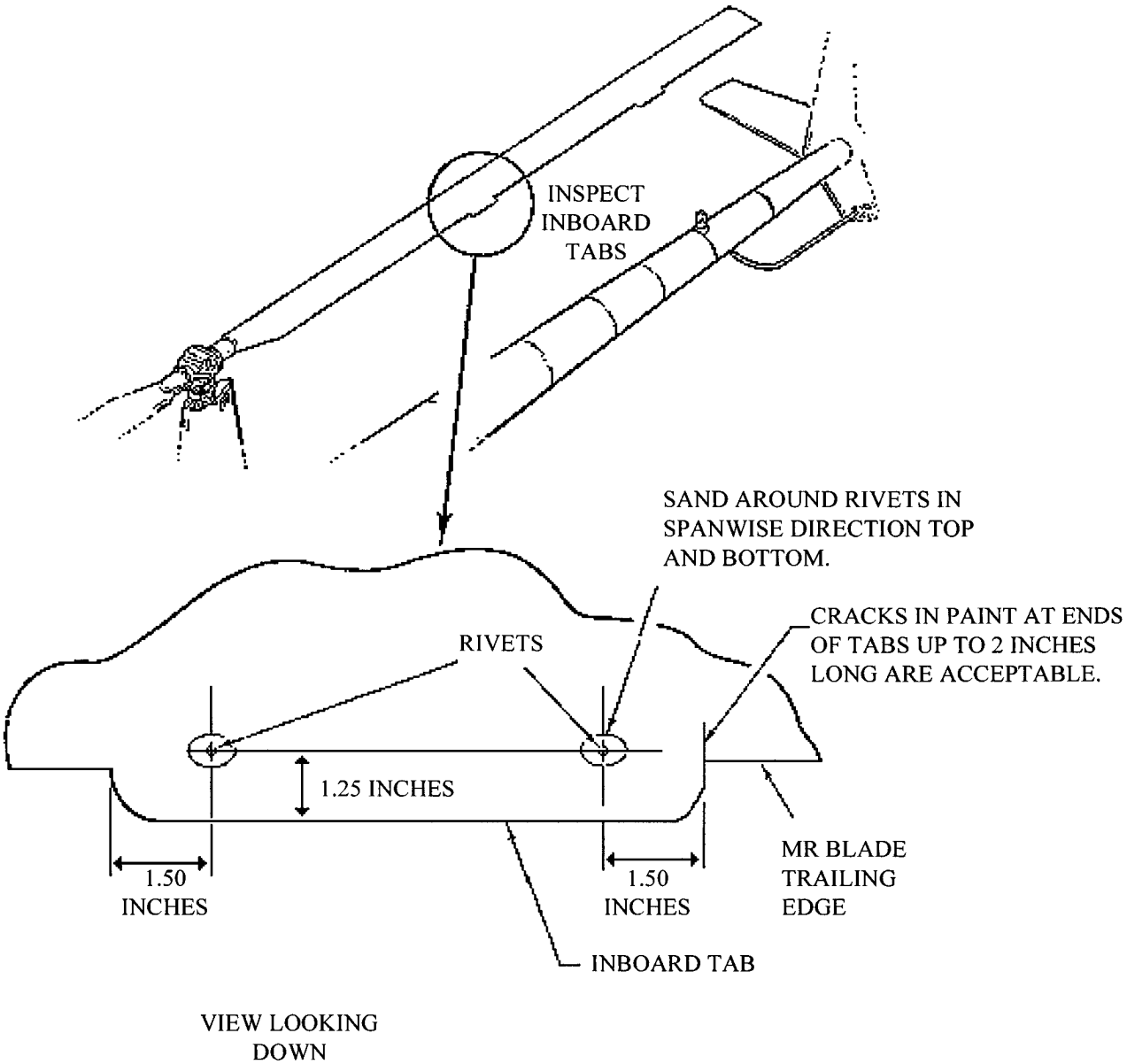

Figure 1

BILLING CODE 4910–13–C

(1) Remove all paint around both rivets, exposing an area of approximately ¾″ in diameter, at the inboard trim tab on top and bottom of each blade (4 places per blade). Use 180 grit or finer abrasive paper, followed by 600 grit or finer paper to eliminate course sanding marks. Sand only in a spanwise direction. Do not use chemical paint strippers.

(2) Inspect the blade skin around the rivets on the upper and lower surfaces (4 locations) using a dye penetrant method.

Note 2: Chordwise cracks in the paint up to 2 inches long which are located along either inboard or outboard edge of the trim tab are acceptable.

(b) Clean the sanded areas prepared in accordance with paragraph (a) of this AD with 111-Trichloroethane or methyl ethyl ketone (MEK) and then apply clear lacquer to seal the unpainted areas.

Note 3: Do not bend the inboard main rotor blade tabs from their present position or utilize them for any subsequent blade tracking adjustment.

(c) Thereafter, prior to the first flight of each day, or at intervals not to exceed 5 hours TIS, whichever occurs first, using a 5-power or higher magnifying glass, visually inspect the upper and lower blade skin surfaces around the inboard trim tab rivets (4 locations) for cracks.

(d) If a crack is found, replace the main rotor blade with an airworthy main rotor blade before further flight.

(e) Installation of a set of main rotor blades, P/N C016–2, constitutes terminating action for the requirements of this AD.

(f) An alternative method of compliance or adjustment of the compliance time that provides an acceptable level of safety may be used if approved by the Manager, Los Angeles Aircraft Certification Office, FAA. Operators shall submit their requests through an FAA Principal Maintenance Inspector, who may concur or comment and then send it to the Manager, Los Angeles Aircraft Certification Office.

Note 4: Information concerning the existence of approved alternative methods of compliance with this AD, if any, may be obtained from the Los Angeles Aircraft Certification Office.

(g) Special flight permits will not be issued.

Note 5: Robinson Helicopter Company R44 Service Bulletin SB–27A, revised May 29, 1998, pertains to the subject of this AD.

(h) This amendment becomes effective on August 28, 1998, to all persons except those persons to whom it was made immediately effective by Priority Letter AD 98–12–19, issued June 2, 1998, which contained the requirements of this amendment.

Issued in Fort Worth, Texas, on August 5, 1998.

Henry A. Armstrong,

Manager, Rotorcraft Directorate, Aircraft Certification Service.

[FR Doc. 98–21706 Filed 8–12–98; 8:45 am]

BILLING CODE 4910–13–U

DEPARTMENT OF HEALTH AND HUMAN SERVICES

Food and Drug Administration

21 CFR Part 358

[Docket No. 81N–0201]

RIN 0910–AA01

Pediculicide Drug Products for Over-the-Counter Human Use; Final Monograph; Technical Amendment

AGENCY: Food and Drug Administration, HHS.

ACTION: Final rule; technical amendment.

SUMMARY: The Food and Drug Administration (FDA) is amending the regulation that established conditions under which over-the-counter (OTC) pediculicide drug products (products used for the treatment of head, pubic (crab), and body lice) are generally recognized as safe and effective and not misbranded. This final rule clarifies that the pediculicide active ingredient, pyrethrum extract, is to provide a specified concentration range of pyrethrins in a formulated product. This final rule is part of the ongoing review of OTC drug products conducted by FDA.

EFFECTIVE DATE: September 14, 1998.

FOR FURTHER INFORMATION CONTACT: Michael T. Benson, Center for Drug Evaluation and Research (HFD–560), Food and Drug Administration, 5600 Fishers Lane, Rockville, MD 20857, 301–827–2245.

SUPPLEMENTARY INFORMATION:

I. Background

In the **Federal Register** of December 14, 1993 (58 FR 65452), FDA issued a final monograph for OTC pediculicide drug products (part 358 (21 CFR part 358, subpart G)) establishing conditions under which the drug products that are subject to that monograph will be generally recognized as safe and effective and not misbranded. The effective date of that monograph was December 14, 1994. The active ingredients under § 358.610 of the monograph were described as the combination of pyrethrum extract (0.17 to 0.33 percent) with piperonyl butoxide (2 to 4 percent) in a nonaerosol dosage formulation.

On October 30, 1996, the Nonprescription Drug Manufacturers Association (NDMA) requested a technical amendment of the final monograph to clarify that pyrethrum extract in § 358.610 provides a concentration of 0.17 to 0.33 percent pyrethrins in the final product formulation (Ref. 1). NDMA stated that proposed § 358.610 of the tentative final monograph for OTC pediculicide drug products listed ''pyrethrins (0.17 to 0.33 percent)'' as the active ingredient (54 FR 13480 at 13487, April 3, 1989), and that there was no United States Pharmacopeia (USP) monograph for pyrethrins at that time. NDMA noted that a USP monograph entitled ''pyrethrum extract'' (Ref. 2) was in effect at the time of publication of the final monograph for OTC pediculicide drug products in 1993, and FDA used ''pyrethrum extract (0.17 to 0.33 percent)'' in § 358.610. The USP monograph (Ref. 2) stated that pyrethrum extract contains approximately 50 percent of the sum of Pyrethrins I and II. NDMA added that, subsequently, USP changed the concentration of Pyrethrins I and II in pyrethrum extract from 50 percent to 20 percent (Ref. 3). NDMA pointed out that a manufacturer following § 358.610 of the final monograph and the latest USP monograph for pyrethrum extract could produce a product containing one-fifth the desired concentration of pyrethrins. NDMA recommended that the agency publish a technical amendment to revise § 358.610 to state ''* * * pyrethrum extract (providing a concentration of pyrethrins of 0.17 to 0.33 percent) * * *'' instead of ''* * * pyrethrum extract (0.17 to 0.33 percent) * * *.'' NDMA indicated that this amendment would allow manufacturers flexibility in using pyrethrum extract containing either 50 or 20 percent pyrethrins to produce a pediculicide product with the desired concentration of pyrethrins.

II. Description of the Technical Amendment

The agency concurs that amendment of § 358.610 is appropriate and is revising this section accordingly.

Publication of this document constitutes final action on this change under the Administrative Procedure Act (5 U.S.C. 553). This final rule institutes a change that is nonsubstantive in nature. The change does not alter the required range of pyrethrins for pediculicide active ingredients, but simply clarifies that the range was intended to apply to the pyrethrins in the active ingredients. Therefore, FDA finds that the notice and comment procedures are unnecessary and not in the public interest (5 U.S.C. 553(b) and (d)).

III. References

The following references are on display in the Dockets Management Branch (HFA–305), Food and Drug

Administration, 12420 Parklawn Dr., rm 1–23, Rockville, MD 20857, and may be seen by interested persons between 9 a.m. and 4 p.m., Monday through Friday.

1. Comment No. LET19, Docket No. 81N090201, Dockets Management Branch.

2. *United States Pharmacopeia 23—National Formulary 18*, United States Pharmacopeial Convention, Inc., Rockville, MD, p. 1345, 1994.

3. *Second Supplement to USP 23 and to NF 18*, United States Pharmacopeial Convention, Inc., Rockville, MD, p. 2671, 1995.

IV. Analysis of Impacts

FDA has examined the impacts of this final rule under Executive Order 12866 and the Regulatory Flexibility Act (5 U.S.C. 601–612). Executive Order 12866 directs agencies to assess all costs and benefits of available regulatory alternatives and, when regulation is necessary, to select regulatory approaches that maximize net benefits (including potential economic, environmental, public health and safety, and other advantages; distributive impacts; and equity). Under the Regulatory Flexibility Act, if a rule has a significant impact on a substantial number of small entities, an agency must analyze regulatory options that would minimize any significant impact of a rule on small entities. This final rule makes a minor clarification in the concentration of an active ingredient. It does not change the manner in which manufacturers make these pediculicide drug products and will not cause any burden on small entities. The agency certifies that this final rule will not have a significant economic impact on a substantial number of small entities. This economic analysis, together with other relevant sections of this document, serves as the agency's final regulatory flexibility analysis, as required under the Regulatory Flexibility Act.

The Unfunded Mandates Act (2 U.S.C. 1501 *et seq.*) does not apply to this final rule because it would not result in an expenditure in any one year by State, local, and tribal governments, in the aggregate, or by the private sector, of $100 million.

V. Paperwork Reduction Act of 1995

This final rule contains no collection of information. Therefore, clearance by the office of Management and Budget under the Paperwork Reduction Act of 1995 is not required.

VI. Environmental Impact

The agency has determined under 21 CFR 25.30(h) that this action is of a type that is categorically excluded from the preparation of an environmental assessment because these actions, as a class, will not result in the production or distribution of any substance and therefore will not result in the production of any substance into the environment.

List of Subjects in 21 CFR Part 358

Labeling, Over-the-counter drugs.

Therefore, under the Federal Food, Drug, and Cosmetic Act and under authority delegated to the Commissioner of Food and Drugs, 21 CFR part 358 is amended as follows:

PART 358—MISCELLANEOUS EXTERNAL DRUG PRODUCTS FOR OVER-THE-COUNTER HUMAN USE

1. The authority citation for 21 CFR part 358 continues to read as follows:

Authority: 21 U.S.C. 321, 351, 352, 353, 355, 360, 371.

2. Section 358.610 is revised to read as follows:

§ 358.610 Pediculicide active ingredients.

The active ingredients of the product consist of the combination of pyrethrum extract (providing a concentration of pyrethrins of 0.17 to 0.33 percent) with piperonyl butoxide (2 to 4 percent) in a nonaerosol dosage formulation.

Dated: August 5, 1998.

William K. Hubbard,

Associate Commissioner for Policy Coordination.

[FR Doc. 98–21794 Filed 8–12–98; 8:45 am]

BILLING CODE 4160–01–F

DEPARTMENT OF THE TREASURY

Internal Revenue Service

26 CFR Part 1

Income Tax; Taxable Years Beginning After December 31, 1953

CFR Correction

In Title 26 of the Code of Federal Regulations, part 1 (§§ 1.401 to 1.440), revised as of April 1, 1998, in § 1.402(a)–1, paragraphs (b)(2)(ii)(*d*) and (c) were inadvertently omitted. The reinstated text of these paragraphs and the source note read as follows:

§ 1.402(a)–1 Taxability of beneficiary under a trust which meets the requirements of section 401(a).

* * * * *

(b)* * *

(2)* * *

(ii)* * *

(*d*)(*1*) In all other cases, there shall be used the average cost (or other basis) to the trust of all securities of the employer corporation of the type distributed to the distributee which the trust has on hand at the time of the distribution, or which the trust had on hand on a specified inventory date which date does not precede the date of distribution by more than twelve calendar months. If a distribution includes securities of the employer corporation of more than one type, the average cost (or other basis) to the trust of each type of security distributed shall be determined. The average cost to the trust of securities of the employer corporation on hand on a specified inventory date (or on hand at the time of distribution) shall be computed on the basis of their actual cost, considering the securities most recently purchased to be those on hand, or by means of a moving average calculated by subtracting from the total cost of securities on hand immediately preceding a particular sale or distribution an amount computed by multiplying the number of securities sold or distributed by the average cost of all securities on hand preceding such sale or distribution.

(*2*) These methods of computing average cost may be illustrated by the following examples:

Example (*1*). A, a distributee who makes his income tax returns on the basis of a calendar year, receives on August 1, 1954, in a total distribution, to which paragraph (a)(6) of this section is applicable, ten shares of class D stock of the employer corporation. On July 1, 1954 (the specified inventory date of the trust), the trust had on hand 80 shares of class D stock. The average cost of the 10 shares distributed, on the basis of the actual cost method, is $100 computed as follows:

Shares	Purchase date	Cost per share	Total cost
20	June 24, 1954.	$101	$2,020
40	Jan. 10, 1953	102	4,080
20	Oct. 20, 1952	95	1,900
80	.....	8,000	

Example (*2*). B, a distributee who makes his income tax returns on the basis of a calendar year, receives on October 31, 1954, in a total distribution, to which paragraph (a)(6) of this section is applicable, 20 shares of class E stock of the employer corporation. The specified inventory date of the trust is the last day of each calendar year. The trust had on hand on December 31, 1952, 1,000 shares of class E stock of the employer corporation. During the calendar year 1953 the trust distributed to four distributees a total of 100 shares of such stock and acquired, through a number of purchases, a total of 120 shares. The average cost of the

20 shares distributed to B, on the basis of the moving average method, is $52 computed as follows:

	Shares	Total cost	Average cost
On hand Dec. 31, 1952	1,000	$50,000	$50
Distributed during 1953 at average cost of $50	100	5,000	(0)
	900	45,000	(0)
Purchased during 1953	120	8,000	(0)
On hand Dec. 31, 1953	1,020	53,040	52

(*3*) *Unrealized appreciation attributable to employee contributions.* In any case in which it is necessary to determine the amount of net unrealized appreciation in securities of the employer corporation which is attributable to contributions made by an employee:

(*i*) The cost or other basis of the securities to the trust and the amount of net unrealized appreciation shall first be determined in accordance with the regulations in subparagraph (2) of this paragraph;

(*ii*) The amount contributed by the employee to the purchase of the securities shall be solely the portion of his actual contributions to the trust properly allocable to such securities, and shall not include any part of the increment in the trust fund expended in the purchase of the securities;

(*iii*) The amount of net unrealized appreciation in the securities distributed which is attributable to the contributions of the employee shall be that proportion of the net unrealized appreciation determined under the regulations of subparagraph (2) of this paragraph which the contributions of the employee properly allocable to such securities bear to the cost or other basis to the trust of the securities;

(*iv*) If a distribution consists solely of securities of the employer corporation, the contributions of the employee expended in the purchase of such securities shall be allocated to the securities distributed in a manner consistent with the principles set forth in subparagraph (2)(ii) (*a*), (*b*), (*c*), or (*d*) of this paragraph, whichever is applicable. Thus, the amount of the employee's contribution which can be identified as having been expended in the purchase of a particular security shall be allocated to such security, and the amount of such contribution which cannot be so identified shall be allocated ratably among the securities distributed. If a distribution consists in part of securities of the employer corporation and in part of cash or other property, appropriate allocation of a portion of the employee's contribution to such cash or other property shall be made unless such a location is inconsistent with the terms of the plan or trust.

(*v*) The application of this subparagraph may be illustrated by the following example:

Example. A trust distributes ten shares of stock issued by the employer corporation each of which has an average cost to the trust of $100, consisting of employee contributions in the amount of $60 and employer contributions in the amount of $40, and on the date of distribution has a fair market value of $180. The portion of the net unrealized appreciation attributable to the contributions of the employee with respect to each of the shares of stock is $48 computed as follows:

(1) Value of one share of stock on distribution date	$180
(2) Employee contributions	60
(3) Employer contributions	40
(4) Total contributions	100
(5) Net unrealized appreciation	80
(6) Portion of net unrealized appreciation attributable to employee contributions 60/100 (amount of employee contributions (item 2) over total contributions (item 4) of $80 (item 5)	48

(*vi*) For the purpose of determining gain or loss to the distributee in the year or years in which any share of stock referred to in the example in subdivision (*v*) of this subparagraph is sold or otherwise disposed of in a taxable transaction, the basis of each such share in the hands of the distributee at the time of the distribution by the trust will be $132 computed as follows:

(a) Employee contributions	$60
(b) Employer contributions (taxable as ordinary income in the year the securities were distributed)	40
(c) Portion of net unrealized appreciation attributable to employer contributions (item 5) minus (item 6) (taxable as ordinary income in the year the securities were distributed)	32
(d) Basis of stock	132

(*4*) *Change in exempt status of trust.* For principles applicable in making appropriate adjustments if the trust was not exempt for one or more years before the year of distribution, see paragraph (a) of this section.

(c) *Certain distributions by United States to nonresident alien individuals.* (1) This paragraph applies to a distribution—

(i) Which is made by the United States under a pension plan described in section 401(a);

(ii) Which is made in respect of services performed by an employee of the United States; and

(iii) Which is received by, or made available to, a nonresident alien individual (including a nonresident alien individual who is a beneficiary of a deceased employee) during a taxable year beginning after December 31, 1959.

The amount of such a distribution that is includible in the gross income of the nonresident alien individual under section 402(a) (1) or (2) shall not exceed an amount which bears the same ratio to the amount which would be includible in gross income if it were not for this paragraph, as—

(*a*) The aggregate basic salary paid by the United States to the employee for his services in respect of which the distribution is being made, reduced by the amount of such basic salary which was not includible in the employee's gross income by reason of being from sources without the United States, bears to

(*b*) The aggregate basic salary paid by the United States to the employee for his services in respect of which the distribution is being made.

See section 402(a)(4). See, also, paragraph (a) of this section for rules relating to the amount that is includible in gross income under section 402(a) (1) or (2) in the case of a distribution under a pension plan described in section 401(a).

(2) For purposes of applying section 402(a)(4) and this paragraph to distributions under the Civil Service Retirement Act (5 U.S.C. 2251), the term ''basic salary'' shall have the meaning provided in section 1(d) of such Act. In applying section 402(a)(4) and this paragraph to distributions under any other qualified pension plan of the United States, such term shall have a similar meaning. Thus, for example, ''basic salary'' does not, in any case, include bonuses, allowances, or overtime pay.

(3) The rules in this paragraph may be illustrated by the following examples:

Example (*1*). A, a retired employee of the United States who performed all of his services for the United States in a foreign country, receives, in respect of such services, a monthly pension of $200 under the Civil Service Retirement Act (a pension plan described in section 410(a)). A received an aggregate basic salary for his services for the United States of $100,000. A was a nonresident alien individual during the whole of his employment with the United States and,

therefore, his basic salary from the United States was not includible in his gross income by reason of being from sources without the United States. A would be requited, under section 72 but without regard to section 402(a)(4) and this paragraph, to include $60 of each monthly pension payment in his gross income. The amount that is includible in A's gross income under section 402(a)(1) with respect to the monthly payments received during taxable years beginning after December 31, 1959, and while A is a nonresident alien individual, is computed as follows:

(i) Amount of distribution includible in gross income under section 72 without regard to section 402(a)(4)	$60
(ii) Aggregate basic salary for services for United States	100,000
(iii) Aggregate basic salary for services for United States reduced by amount of such salary not includible in A's gross income by reason of being from sources without the United States	0
(iv) Amount includible in A's gross income under section 402(a)(1) ((iii)÷(ii)×(i), or $0/$100,000×$60)	0

Example (*2*). B, a retired employee of the United States who performed services for the United States both in a foreign country and in the United States, receives, in respect of such services, a monthly pension of $240 under the Civil Service Retirement Act. B received an aggregate basic salary for his services for the United States of $120,000; $80,000 of which was for his services performed in the United States, and $40,000 of which was for his services performed in the foreign country. B was a nonresident alien individual during the whole of his employment with the United States and, consequently, the $40,000 basic salary for his services performed in the foreign country was not includible in his gross income by reason of being from sources without the United States. B would be required, under section 72 but without regard to section 402(a)(4) and this paragraph, to include $165 of each monthly pension in his gross income. The amount that is includible in B's gross income under section 402(a)(1) with respect to the monthly payments received during taxable years beginning after December 31, 1959, and while B is a nonresident alien individual, is computed as follows:

(i) Amount of distribution includible in gross income under section 72 without regard to section 402(a)(4)	$165
(ii) Aggregate basic salary for services for United States	120,000
(iii) Aggregate basic salary for services for United States reduced by amount of such salary not includible in B's gross income by reason of being from sources without the United States ($120,000 − $40,000)	80,000
(iv) Amount includible in B's gross income under section 402(a)(1)(iii)÷(ii)×(i), or $80,000/$120,000×$165)	110

* * * * *

[T.D. 6500, 25 FR 11675, Nov. 26, 1960, as amended by T.D. 6497, 25 FR 10021, Oct. 20, 1960; T.D. 6676, 28 FR 10142, Sept. 17, 1963; T.D. 6717, 29 FR 4092, Mar. 28, 1964; T.D. 6722, 29 FR 5073, Apr. 14, 1964; T.D. 6823, 30 FR 6340, May 6, 1965; T.D. 6885, 31 FR 7800, June 2, 1966; T.D. 6887, 31 FR 8786, June 24, 1966; T.D. 8217, 53 FR 29673, Aug. 8, 1988; T.D. 8357, 56 FR 40545, Aug. 15, 1991; T.D. 8357, 57 FR 10290, Mar. 25, 1992; T.D. 8581, 59 FR 66180, Dec. 23, 1994]

BILLING CODE 1505–01–D

DEPARTMENT OF THE INTERIOR

Office of Surface Mining Reclamation and Enforcement

30 CFR Part 924

[SPATS No. MS–013–FOR]

Mississippi Regulatory Program

AGENCY: Office of Surface Mining Reclamation and Enforcement (OSM), Interior.

ACTION: Final rule; approval of amendment.

SUMMARY: OSM is approving, with additional requirements, an amendment to the Mississippi regulatory program (hereinafter referred to as the ''Mississippi program'') under the Surface Mining Control and Reclamation Act of 1977 (SMCRA). Mississippi proposed to replace all of its currently approved regulations for surface coal mining and reclamation operations with new regulations. The amendment is intended to revise the Mississippi program to be consistent with the corresponding Federal regulations, provide additional safeguards, and improve operational efficiency.

EFFECTIVE DATE: August 13, 1998.

FOR FURTHER INFORMATION CONTACT: Arthur W. Abbs, Director, Birmingham Field Office, Office of Surface Mining Reclamation and Enforcement, 135 Gemini Circle, Suite 215, Homewood, Alabama 35209. Telephone: (205) 290–7282. Internet: aabbs@osmre.gov.

SUPPLEMENTARY INFORMATION:

I. Background on the Mississippi Program
II. Submission of the Proposed Amendment
III. Director's Findings
IV. Summary and Disposition of Comments
V. Director's Decision
VI. Procedural Determinations

I. Background on the Mississippi Program

On September 4, 1980, the Secretary of the Interior approved the Mississippi program. Background information on the Mississippi program, including the Secretary's findings and the disposition of comments, can be found in the September 4, 1980, **Federal Register** (45 FR 58520). Subsequent actions concerning the Mississippi program can be found at 30 CFR 924.10, 924.16, and 924.17.

II. Submission of the Proposed Amendment

By letter dated March 26, 1998 (Administrative Record No. MS–0355), Mississippi submitted an amendment to its program pursuant to SMCRA. Mississippi submitted the amendment in response to letters dated May 20, 1996, January 6, 1997, and June 17, 1997 (Administrative Record Nos. MS–0333, MS–0336, and MS–0339, respectively), that OSM sent to Mississippi in accordance with 30 CFR 732.17(c); in response to the required program amendments at 30 CFR 924.16 (a) and (e); and at its own initiative.

OSM announced receipt of the proposed amendment in the April 14, 1998, **Federal Register** (63 FR 18173), and in the same document opened the public comment period and provided an opportunity for a public hearing or meeting on the adequacy of the proposed amendment. The public comment period closed on May 14, 1998. Because no one requested a public hearing or meeting, none was held.

During its review of the amendment, OSM identified concerns relating to administrative and judicial review of permit decisions, procedures for seeking release of performance bond, surface- and ground-water monitoring, revegetation, cessation orders, formal review of citations, and numerous editorial-type errors. OSM notified Mississippi of these concerns by letter dated June 4, 1998 (Administrative Record No. MS–0366).

Mississippi notified OSM by telephone that it would not make changes to the amendment at this time and that OSM should proceed with the publication of the final rule **Federal Register** document.

III. Director's Findings

Set forth below, pursuant to SMCRA and the Federal regulations at 30 CFR 732.15 and 732.17, are the Director's findings concerning the amendment. Detailed findings are only being made for those regulations that require additional explanation or that require additional amendment. In general provisions that are not discussed below contain language that is the same as or similar to the corresponding Federal regulations. Any differences between the State and Federal regulations are either nonsubstantive or add detail not contained in the Federal counterparts. These differences do not adversely

affect other aspects of the Mississippi program.

A. General

Mississippi proposed to amend its program by replacing the ''Mississippi Surface Coal Mining Regulations'' for surface and underground coal mining operations, Parts 100 through 250, with the ''State of Mississippi Surface Coal Mining Regulations'' for surface coal mining operations, Subpart I, Chapters 1 through 7; Subpart II, Chapters 9 through 15; Subpart III, Chapters 17 through 37; Subpart IV, Chapters 39 through 47; Subpart V, Chapters 49 through 71; and Policy Statement No. PS–1. The Director previously approved amendments to the Mississippi Surface Coal Mining and Reclamation Law (Mississippi Law) on January 9 and June 25, 1998 (63 FR 1342 and 63 FR 34597, respectively).

1. 30 CFR 732.15 Findings

Based on the regulatory findings in this document and the statutory findings in the **Federal Register** documents dated January 9 and June 25, 1998, the Director finds that none of the proposed changes alter the original findings made at the time of program approval concerning Mississippi's authority and capability to implement, administer, and enforce a program to regulate coal exploration and surface coal mining and reclamation operations (March 25, 1980, 45 FR 19268, and September 4, 1980, 45 FR 58520).

2. Underground Coal Mining Operations

Because the commercial coal seams are close to the surface, no underground coal mining activity is anticipated in Mississippi. Therefore, Mississippi did not propose any regulations relating to underground coal mining operations.

Considering the type of mining contemplated in the State, the Director finds that provisions for underground coal mining are not necessary in Mississippi at this time. Mississippi has the authority to promulgate regulations regarding the surface effects of underground coal mining operations, under section 53–9–47 of the Mississippi Law, if they are ever needed.

3. Editorial Errors

In its letter dated June 4, 1998, OSM notified Mississippi of numerous spelling, format, or consistency errors that were identified during review of the proposed amendment. However, none of these errors change the meaning or impact the effectiveness of Mississippi's proposed regulations.

4. 30 CFR 924.10(b). Provisions of the Mississippi Program Affirmatively Disapproved to Comply With the Order of the District Court.

In the **Federal Register** notice announcing the Department of the Interior's approval of Mississippi's original program, the Secretary at 30 CFR 924.10(b) affirmatively disapproved several provisions of Mississippi's program that incorporated suspended or remanded Federal regulations (September 4, 1980, 45 FR 58520). The affirmative disapprovals were based upon an order of the U.S. District Court for the District of Columbia that the Secretary ''affirmatively disapprove * * * those segments of a State program that incorporate a suspended or remanded regulation'' (*In re: Permanent Surface Mining Regulation Litigation, Civil Action 79–1144*, May 16, 1980, Mem. Op. at 49).

On August 15, 1980, the court partly stayed its May 16, 1980, order and allowed the Secretary to approve State program provisions similar to remanded or suspended Federal regulations when the State adopted such provisions in a rulemaking or legislative proceeding which occurred after the date of the District Court decision. Mississippi is replacing all of its original program regulations with proposed regulations that are based on revised Federal regulations, not on the remanded 1979 language. Therefore, the Director finds, consistent with the court decision, that the affirmative disapprovals at 30 CFR 924.10(b)(1) through (37) are no longer necessary. The Director is taking this opportunity to remove them.

5. In accordance with the required program amendment at 30 CFR 924.16(a), Mississippi amended its program to include all the applicable provisions of the Federal regulations at 30 CFR Chapter VII in existence at this time. Therefore, the Director is removing the required amendment at 30 CFR 924.16(a).

B. Subpart I, Chapter 1, General

Chapter 1 contains introductory information on the organizational structure of the Mississippi regulatory authority, including designations of responsibility for administering and enforcing the Mississippi program at sections 101 and 103. It contains the definitions that are applicable to the State program at section 105, the provisions for making determinations of whether an operation is exempt from the regulations at section 107, and the method for computation of time under the regulations at section 115. It also contains the public participation provisions relating to petitions to initiate rulemaking at section 109, notice of citizen suits at section 111, and availability of records at section 113.

The Director finds that, with the exception of the provisions discussed below, the proposed regulations and definitions contained in Chapter 1 contain language that is the same as or similar to and no less effective than the corresponding Federal regulations at 30 CFR Part 700 and the corresponding Federal definitions at 30 CFR 700.5, 701.5, 705.5, 707.5, 761.5, 762.5, 773.5, 800.5, 800.23, 840.11, 843.5, and 846.5.

1. Sections 101 and 103, Authority and Responsibility

Section 101 provides that the Office of Geology of the Department of Environmental Quality is authorized to administer the requirements of the State laws and regulations. Section 103(a) designates the Mississippi Commission on Environmental Quality as the body to enforce the State laws and regulations, including the issuance of penalty orders, promulgation of regulations, designation of lands unsuitable for surface coal mining, and forfeiture of performance bonds. Section 103(b) designates the Mississippi Environmental Quality Permit Board as the body to issue, modify, revoke, transfer, suspend, and reissue permits and to require, modify, or release performance bonds. These three bodies work together, within the framework of the State laws and regulations, to regulate surface coal mining and reclamation operations and coal exploration on non-Federal and non-Indian lands in the State of Mississippi.

The Director finds that these provisions are consistent with the requirements of 30 CFR 700.3(c) and 700.4(c), which authorize the States to enforce State laws and regulations and delegate to the States the responsibility for regulation of surface coal mining and reclamation operations and coal exploration under an approved State program.

2. Section 105, Definitions

This section contains most of Mississippi's defined terms.

a. Mississippi proposed definitions for the following accounting terms: acid test ratio, asset ratio, capital assets, cash, net profit, quick assets, retained earnings, return on investment, and working capital.

There are no Federal counterparts to these definitions. However, the Director finds that the terms are generally accepted accounting terms used in both government and business and that the

proposed definitions are consistent with the definitions found in management accounting publications for the same terms.

b. Mississippi proposed to define the term ''appeal'' to mean an appeal to an appropriate court of the State taken from a final decision of the Permit Board or Commission made after a formal hearing before that body.

Neither SMCRA nor the Federal regulations define the term ''appeal.'' However, the definition is not inconsistent with section 526(e) of SMCRA or 30 CFR 775.13 of the Federal regulations, which require actions of a State regulatory authority be subject to judicial review by a court of competent jurisdiction in accordance with State law. Therefore, the Director finds that the State's definition is consistent with the generally accepted meaning of this term in the context of administrative law and is approving it.

c. Mississippi defined the terminology ''as recorded in the minutes of the Permit Board'' to mean the date of the Permit Board meeting at which the action concerned is taken by the Permit Board. The Permit Board records all of its initial and final decisions or actions concerning permit applications, permit suspension or revocation, and performance bond release in the minutes of the meetings held to consider them. Within specified times of these recordings, the applicants and interested parties may file written requests for formal hearings of the initial decisions before the Permit Board or appeal the final decisions before the chancery court.

Although there is no Federal counterpart definition, the Director finds that the proposed definition is not inconsistent with the administrative review requirements of SMCRA or the Federal regulations.

d. Mississippi proposed definitions for the following terms to reflect both changes in agency names and the reorganization of the State regulatory authority. The term ''Commission'' was defined as the Mississippi Commission on Environmental Quality. The term ''Department'' was defined to mean the Office of Geology of the Department of Environmental Quality. The term ''Executive Director'' was defined as the Executive Director of the Mississippi Department of Environmental Quality, the Mississippi Commission on Environmental Quality, and the Mississippi Environmental Quality Permit Board. The term ''Office of Geology'' was defined as the Office of Geology and Energy Resources of the Department, as created by Miss. Code Ann. section 49–2–7(a). The term ''Permit Board'' was defined as the Mississippi Environmental Quality Permit Board created by Miss. Code Ann. section 49–17–28. The term ''State Geologist'' was defined as the head of the Office of Geology and Energy Resources of the Department.

There are no Federal counterpart definitions. However, since the proposed definitions clarify terms used throughout Mississippi's regulations and are not inconsistent with any terms used in SMCRA or the Federal regulations, the Director is approving them.

e. Mississippi defined the term ''formal hearing'' to mean a hearing on the record, as recorded and transcribed by a court reporter, before the Commission or Permit Board where all parties to the hearing are allowed to present witnesses, cross-examine witnesses and present evidence for inclusion into the record, as appropriate under rules promulgated by the Commission or Permit Board.

There is no direct counterpart Federal definition. However, the Director finds that the proposed definition is not inconsistent with the Federal requirements for administrative review at section 525 of SMCRA and 30 CFR Part 775 of the Federal regulations.

f. Mississippi proposed the following definition for ''head-of-hollow fill'':

> A fill structure consisting of any material, other than coal-processing waste and organic material, placed in the uppermost reaches of a hollow where side slopes of the existing hollow measured at the steepest point are greater than 20 degrees or the average slope of the profile of the hollow from the toe of the fill to the top of the fill is greater than 10 degrees. In fills with less than 250,000 cubic yards of material, associated with contour mining, the top surface of the fill will be at the elevation of the coal seam. In all other head-of-hollow fills, the top surface of the fill, when completed, is at approximately the same elevation as the adjacent ridge line, and no significant area of natural drainage occurs above the fill draining into the fill area.

With two exceptions, the proposed definition is substantively the same as the Federal definition at 30 CFR 701.5. First, Mississippi is not allowing coal processing waste to be placed in head-of-hollow fills. Second, Mississippi specified that in fills with less than 250,000 cubic yards of material, associated with contour mining, the top surface of the fill will be at the elevation of the coal seam. OSM's review determined that the addition of these requirements make Mississippi's definition more stringent than the counterpart Federal definition. The Federal regulation at 30 CFR 700.3 provides the States the authority to enforce more stringent land use and environmental controls and regulations. Section 505(b) of SMCRA and the Federal regulation at 30 CFR 730.11(b) provide that any State law or regulation which provides for more stringent land use and environmental controls and regulations of coal exploration and surface coal mining and reclamation operations than do the provisions of SMCRA or the Federal regulations shall not be construed to be inconsistent with SMCRA or the Federal regulations. Therefore, the Director is approving Mississippi's definition for head-of-hollow fills.

g. A definition for the term ''interested party'' was added to mean any person claiming an interest relating to the surface coal mining operation and who is so situated that the person may be affected by that operation, or in the matter of regulations promulgated by the Commission, any person who is so situated that the person may be affected by the action.

There is no definition for the term ''interested party'' in SMCRA or the Federal regulations. However, the proposed definition is not inconsistent with the use of the terminology ''any person having an interest which is or may be adversely affected'' found in section 513(b) of SMCRA and 30 CFR Part 775 of the Federal regulations. Therefore, the Director is approving it.

h. Mississippi proposed the following definition for the term ''modification'':

> Any change to a permit or reclamation plan that significantly changes, or has the reasonable potential significantly to change, the effect of the mining operation on either those persons impacted by the permitted operations or on the environment.

Mississippi uses the term ''modification'' as its counterpart to the Federal reference to ''significant permit revisions'' at 30 CFR 774.13. All modifications are subject to permit application information requirements and procedures, including notice and hearings.

There is no definition for the term ''modification'' in SMCRA or the Federal regulations. However, the Director finds that this definition is not inconsistent with the permit revision requirements of section 511 of SMCRA or the Federal regulations at 30 CFR 774.13.

i. Mississippi defined the term ''monitoring,'' as used in Chapter 27, to mean the collection of environmental data by either continuous or periodic sampling methods. Chapter 27 contains the requirements for reclamation and operation plans, including surface- and ground-water monitoring plans.

There is no definition for the term ''monitoring'' in SMCRA or the Federal regulations. However, the Director finds that this definition is not inconsistent with the intent of the Federal requirements for monitoring at 30 CFR Part 780 of the Federal regulations.

j. Mississippi defined the term ''Probable Cumulative Impacts,'' as used in Chapter 25, to mean the expected total qualitative and quantitative, direct and indirect effects of mining and reclamation activities on the hydrologic regime. Mississippi defined the term ''Probable Hydrologic Consequence,'' as used in Chapter 25, to mean the projected result of proposed surface coal mining and reclamation operations which may reasonably be expected to change the quantity or quality of the surface water and ground water, the surface- or ground-water flow, timing and pattern, the stream channel conditions, and the aquatic habitat on the permit area and other affected areas. Chapter 25 contains requirements for information on environmental resources.

There are no Federal counterpart definitions for the terms ''probable cumulative impacts'' and ''probable hydrologic consequences.'' However, the Director finds that the proposed definitions are not inconsistent with the Federal requirements for a probable hydrologic consequences determination at 30 CFR 780.21(f) and a cumulative hydrologic impact assessment at 30 CFR 780.21(g).

k. The terms ''public hearing,'' ''informal hearing,'' or ''public meeting'' were defined to mean a public forum organized by the Commission, Department, or Permit Board for the purpose of providing information to the public regarding a surface coal mining and reclamation operation or regulations proposed by the Commission and at which members of the public are allowed to make comments or ask questions or both of the Commission, Department, or the Permit Board. Section 53–9–37(2)(b) of the Mississippi Law allows any interested party to request a public hearing and requires the Permit Board to hold a public hearing before issuance of a permit, whether or not one has been requested. Any member of the public, not just interested parties, may attend and participate in the hearings or meeting.

There is no Federal counterpart definition. Although SMCRA does not provide for the type of open public process which allows participation by all members of the public, section 513(b) of SMCRA and 30 CFR 773.13 of the Federal regulations provide for an informal conference if requested by any person having an interest which is or may be adversely affected or the officer or head of any Federal, State, or local governmental agency or authority. The conference shall be conducted by a representative of the regulatory authority, who may accept oral or written statements and any other relevant information from any party to the conference. Therefore, the Director finds that Mississippi's proposed definition is no less stringent than the informal conference provisions of section 513 of SMCRA and no less effective than the public participation requirements of 30 CFR 773.13, and is approving the definition for these terms.

l. The term ''public office'' was defined to mean a facility under the direction and control of a governmental entity which is open to public access on a regular basis during reasonable business hours.

There is no counterpart definition in SMCRA or the Federal regulations. However, the Director finds that the definition is consistent with the general meaning of the term, and is approving it.

m. Mississippi defined the term ''Registered Professional Engineer'' to mean a person who has met the qualifications as required under section 73–13–23(1) and who has been issued a certificate of registration by the Mississippi State Board of Registration for Professional Engineers and Land Surveyors. The term ''Registered Professional Geologist'' was defined to mean a geologist who has met the academic and experience qualifications established by the Mississippi Board of Professional Geologists and has been issued a certificate of registration as a registered professional geologist by the Mississippi Board of Professional Geologists pursuant to section 73–63 *et seq.*

There are no counterpart definitions for the terms in either SMCRA or the Federal regulations. However, the definitions of these terms give guidance to the permittees in meeting the requirements of Mississippi's regulations for providing information that has been prepared by and/or certified by a Registered Professional Engineer and/or Registered Professional Geologist. Furthermore, the Director finds that Mississippi's definitions are not inconsistent with any requirements of SMCRA or the Federal regulations.

3. Section 107, Applicability

a. Mississippi chose not to exempt surface coal mining and reclamation operations that extract 250 tons of coal or less from its regulation requirements, and, therefore, did not propose a counterpart to the Federal regulation at 30 CFR 700.11(a)(2).

The Federal regulation at 30 CFR 700.3 provides the States the authority to enforce more stringent land use and environmental controls and regulations. Section 505(b) of SMCRA and the Federal regulation at 30 CFR 730.11(b) provide that any State law or regulation which provides for more stringent land use and environmental controls and regulations of coal exploration and surface coal mining and reclamation operations than do the provisions of SMCRA or the Federal regulations shall not be construed to be inconsistent with SMCRA or the Federal regulations. Therefore, the Director finds that the absence of this exemption will not make the Mississippi regulations less effective than the Federal regulations.

b. At section 107(a)(4), an exemption was provided for the extraction of coal on Indian lands in accordance with 25 CFR 177, Subpart B.

The Federal counterpart exemption was removed on September 28, 1984 (49 FR 38162), because a Federal program for Indian lands was added to the Federal regulations at 30 CFR Part 750 to include permanent program regulation requirements for surface coal mining and reclamation operations on Indian lands. However, the Director finds the proposed exemption at section 107(a)(4) will not make the Mississippi regulations less effective than the Federal regulations because Mississippi does not have the authority to regulate surface coal mining and reclamation operations on Indian lands.

4. Section 109, Petitions To Initiate Rulemaking

Mississippi proposed a provision at section 109(e) that allows petitioners to request a formal hearing on the Commission's denial of the petition pursuant to section 53–9–77 of the Mississippi Law.

There is no direct Federal counterpart to this provision. However, section 526(e) of SMCRA provides that actions of the State regulatory authority pursuant to an approved State program shall be subject to judicial review by a court of competent jurisdiction in accordance with State law. Mississippi's statute at section 53–9–77(1) allows any person who participated as a party in a formal hearing before the Commission to appeal from a final decision of the Commission to the chancery court of the county where the hearing was held. Therefore, Mississippi allows a petitioner a chance for both formal administrative review and judicial review. The Director finds that this

provision enhances the public participation requirements of the State program. Furthermore, section 109(e) does not make Mississippi's regulations inconsistent with any requirements of SMCRA or the Federal regulations.

C. Subpart I, Chapter 3, Permanent Regulatory Program

This chapter provides general introductory material for Mississippi's permanent regulatory program, including information on the applicability of the State program to coal exploration and surface coal mining and reclamation operations. The Department is authorized to administer the requirements of the permanent regulatory program.

The Director finds that the requirements of Chapter 3 are consistent with and no less effective than the requirements of 30 CFR Part 701.

D. Subpart I, Chapter 4, Exemption for Coal Extraction Incidental to the Extraction of Other Minerals

Chapter 4, sections 401 through 419, implement the exemption concerning the extraction of coal not in connection with a surface coal mine and incidental to the extraction of other minerals where coal does not exceed 16⅔ percent of the total tonnage of coal and other minerals removed for purposes of commercial use or sale.

The proposed regulations at Chapter 4, sections 401 through 419, have requirements that are the same as or similar to that of the corresponding Federal regulations at 30 CFR Part 702. Therefore, the Director finds that Mississippi's regulations for implementing the exemption for coal extraction incidental to the extraction of other minerals are no less effective than the counterpart Federal regulations.

E. Subpart I, Chapter 5, Restriction of Financial Interest of Employees

Chapter 5, sections 501 through 519, include provisions to monitor, review, and enforce the prohibition against indirect or direct financial interests in coal mining operations by State employees or specified members of public bodies who perform any function or duty under the Mississippi Law.

Mississippi's proposed regulations have requirements that are consistent with the corresponding Federal regulations at 30 CFR Part 705. Therefore, the Director finds that Mississippi's regulations at Chapter 5, concerning the restriction of financial interests of State employees, are no less effective than the counterpart Federal regulations.

F. Subpart I, Chapter 7, Exemption for Coal Extraction Incident to Government-Financed Highway or Other Construction

Chapter 7, sections 701 through 705, exempt the extraction of coal which is incidental to government-financed construction from the requirements of the Mississippi Law and Mississippi's regulations, if that extraction meets specified criteria which ensure that the construction is government-financed and that the extraction of coal is incidental to it.

Mississippi's regulations at Chapter 5 have requirements that are the same as or similar to that of the corresponding Federal regulations at 30 CFR Part 707. Therefore, the Director finds that Mississippi's regulations for implementing the exemption for coal extraction incident to government-financed highway or other construction are no less effective than the counterpart Federal regulations.

G. Subpart II, Chapters 9, 11, 13, and 15, Areas Unsuitable for Mining

Chapter 9 contains general information concerning the authority and responsibility of the Commission to establish a process for designating lands unsuitable for surface coal mining operations in Mississippi. Chapter 11 implements the authority provided by section 53–9–71 of the Mississippi Law to prohibit or limit surface coal mining operations on areas designated by act of Congress. Chapter 13 provides specific criteria for designating lands as unsuitable for surface coal mining operations. Chapter 15 contains the State process for designating areas unsuitable for surface coal mining operations.

The proposed regulations contained in Subpart II, Chapters 9, 11, 13, and 15, have provisions that are substantively the same as the requirements of the corresponding Federal regulations in Subchapter F, 30 CFR parts 761, 762, and 764. Therefore, the Director finds that Mississippi's regulations for implementing the requirements for designating areas unsuitable for mining are no less effective than the counterpart Federal regulations.

H. Subpart III, Chapters 17 and 21, Coal Exploration Procedures Systems

These chapters pertain to persons who seek to conduct coal exploration operations under Mississippi's regulations. Chapter 17 contains some general requirements for exploration procedures systems. Chapter 21 contains coal exploration and development notice requirements for exploration removing 250 tons of coal or less. It also provides the permit requirements for exploration removing more than 250 tons of coal or occurring on lands designated as unsuitable for surface coal mining operations.

The proposed regulations contained in Subpart III, Chapters 17 and 21 are consistent with the requirements of the corresponding Federal regulations under Subchapter G, 30 CFR Part 772 for regulation of coal exploration. Therefore, the Director finds that the requirements of the State regulations for coal exploration are no less effective than the requirements of the counterpart Federal regulations at 30 CFR part 772.

I. Subpart III, Chapters 17,19, and 31, Surface Coal Mining and Reclamation Operations Permits

These chapters pertain to each person who applies for a permit for surface coal mining and reclamation operations or conducts surface coal mining and reclamation operations pursuant to a permit under Mississippi's regulations. Chapter 17 contains some general requirements for permits and permit processing, including coordination of the review of permit applications with the requirements under other laws. Chapter 19, sections 1901 and 1903, cover information on requirements to obtain permits and compliance with permits. Chapter 31 covers public participation in permit processing, review of permit applications, criteria for permit approval or denial, permit terms and conditions, improvidently issued permits, and verification and review of ownership or control application information.

The Director finds that, with the exception of the provisions discussed below, the proposed regulation requirements contained in Subpart III, Chapters 17, 19, and 31 are substantively the same as or similar to and no less effective than the requirements of the corresponding Federal regulations under Subchapter G, 30 CFR Part 773.

1. Chapter 31, Section 3101, Responsibilities

Section 3101 provides information on the general responsibilities of the Permit Board, Department, Commission, and applicant for permits and permit processing. The Permit Board has the responsibility to approve or disapprove permits. The Department has the responsibility to review permit applications and to recommend to the Permit Board whether each application is complete and accurate and fulfills the requirements of the act and Mississippi's regulations. The

Department and the Permit Board and persons applying for permits shall provide for public participation throughout the permit process. The Commission shall assure implementation and enforcement of the requirements of Chapter 31. The applicant shall provide all information in a complete permit application for review by the Department and action by the Permit Board in accordance with Chapter 31.

There are no direct Federal counterpart requirements to Mississippi's proposed regulation. However, the Director finds that the requirements of section 3101 are not inconsistent with the requirements of sections 506, 507, or 510 of SMCRA or the Federal regulations for permits and permit processing at 30 CFR Part 773.

2. Chapter 31, Section 3113(b)–(f), Review of Violations

Mississippi's proposed language in section 3113 (b) through (f) is consistent with the Federal regulation at 30 CFR 773.15(b), as adopted on October 28, 1994. Mississippi's proposed regulatory language and the Federal regulatory language adopted on October 28, 1994, extend the scope of the permit block sanction to violations incurred by either the applicant or any person who is deemed or presumed to own or control the applicant. However, on January 31, 1997, the U. S. Court of Appeals for the District of Columbia Circuit invalidated portions of the language of the Federal regulation on which the proposed regulation is based because the Federal provision went beyond the plain meaning of section 510(c) of SMCRA, which appears to limit the permit block sanction to violations at operations owned or controlled by the applicant. Subsequently, on April 21, 1997, OSM issued an interim final rule revising the language of 30 CFR 773.15(b) to reflect the court's decision. The new Federal language limits the scope of the permit block sanction to violations incurred by either the applicant or persons owned or controlled by the applicant. Therefore, Mississippi's proposed regulation has more stringent requirements for issuing a permit than the revised Federal regulation. Section 505(b) of SMCRA and the Federal regulation at 30 CFR 730.11(b) provide that any State law or regulation which provides for more stringent land use and environmental controls and regulations of coal exploration and surface coal mining and reclamation operations than do the provisions of SMCRA or the Federal regulations shall not be construed to be inconsistent with SMCRA or the Federal regulations. Therefore, the Director is approving Mississippi's regulation requirements at Chapter 31, section 3113.

3. Chapter 31, Section 3119, Approval or Denial of Permit Applications

In response to the required program amendment at 30 CFR 924.16(e), section 3119(b)(1)(A) provides that if a public hearing has been held under the Mississippi Law and section 3109, the Permit Board shall act upon a complete permit application within 60 days after the date of the public hearing. Mississippi allows this time frame to be extended if agreed to in writing by the Department, the applicant, and the interested party or parties, if any, that requested the public hearing.

The counterpart Federal regulation at 30 CFR 773.15(a) and section 514(a) of SMCRA do not provide for a similar extension of this 60-day time frame. OSM discussed this difference with Mississippi during its review of section 53–9–37(4) of the Mississippi Law that authorized the time-frame extension. In a letter dated November 20, 1997 (Administrative Record No. MS–0346), Mississippi explained why it anticipates the possible need for an extension to the time frame. However, in reviewing the statute, OSM found that it was unclear as to whether Mississippi required both the applicant and the interested party who requested the public hearing to agree to the extension. Consequently, in the **Federal Register** dated January 9, 1998, in Finding C.17, the Director agreed to and approved the provision with an additional requirement (63 FR 1342). The Director required Mississippi to amend its program to clarify that an extension of the 60-day time frame for acting upon a complete permit application must be agreed to by the applicant and the interested parties who requested the public hearing. Mississippi's proposed regulation meets this requirement.

Based on the above discussion, the Director finds that Mississippi's regulation at section 3119(b)(1)(A) is no less stringent than section 514(a) of SMCRA and no less effective than the counterpart Federal regulation at 30 CFR 773.15(a). Therefore, the Director is removing the required program amendment at 30 CFR 924.16(e).

J. Subpart III, Chapter 19, Section 1905, and Chapter 35, Permit Renewals and Permit Revisions

Section 1905 covers some general requirements for permit renewals and permit revisions. Chapter 35 contains Mississippi's major requirements for permit reviews; permit revisions; permit renewals; and transfer, assignment or sale of permit rights.

The Director finds that, with the exception of the provisions discussed below, the proposed regulation requirements contained in Subpart III, section 1905 and Chapter 35 are substantively the same as or similar to and no less effective than the requirements of the corresponding Federal regulations under Subchapter G, 30 CFR Part 774.

1. Chapter 19, Section 1905(a), and Chapter 35, Section 3507(c), Filing Deadline for Permit Renewals

Mississippi's provisions at sections 1905(a) and 3507(c) require applications for renewals to be filed at least 180 days before the expiration of the permit. They also allow an operator, if the application was timely filed, to continue surface coal mining operations until the Permit Board takes action on the renewal application. The Federal requirements for renewal of permits at section 506(d)(1) of SMCRA and 30 CFR 773.19(d) provide that a valid permit shall carry with it the right of successive renewal upon expiration with respect to areas within the boundaries of the existing permit. The Federal regulation at 30 CFR 774.15(b)(1) requires an application for renewal to be filed at least 120 days before expiration of the existing permit term. Neither SMCRA nor the Federal regulations provide guidance on whether or not an operator may continue surface coal mining operations until action is taken on a renewal application that has been filed in a timely manner. However, the Director finds that the proposed provision is not unreasonable. If the operator files an application at least 180 days before the permit expires, Mississippi should have no problems completing its approval process, pursuant to its counterparts to section 506(d)(1) of SMCRA and 30 CFR 774.15(c), prior to expiration of the permit. Therefore, the Director finds that the proposed provisions at sections 1905(a) and 3507(c) will not render the Mississippi program less stringent than SMCRA or less effective than the Federal regulations.

2. Chapter 35, Sections 3515 and 3517, Transfer, Assignment or Sale of Permit Rights

Mississippi's provisions for actual transfer, assignment or sale of the rights granted by a permit are consistent with the Federal provisions at 30 CFR 774.17. However, Mississippi requires a successor in interest to a permittee to apply for a new permit within 30 days of succeeding to that interest. A

successor in interest who is able to obtain the bond coverage of the original permittee may continue surface coal mining and reclamation operations according to the approved mining and reclamation plan of the original permittee until the Permit Board takes action on the successor's application for a new permit.

The Federal regulations do not require a successor in interest to obtain a new permit. At 30 CFR 775.17(f), the successor in interest must conduct the surface coal mining and reclamation operations in full compliance with the terms and conditions of the existing permit, unless a new or revised permit is obtained. Therefore, Mississippi's proposed regulation has more stringent requirements for transfer, assignment or sale of permit rights than the Federal regulations. Section 505(b) of SMCRA and the Federal regulation at 30 CFR 730.11(b) provide that any State law or regulation which provides for more stringent land use and environmental controls and regulations of coal exploration and surface coal mining and reclamation operations than do the provisions of SMCRA or the Federal regulations shall not be construed to be inconsistent with SMCRA or the Federal regulations. Therefore, the Director is approving Mississippi's regulation requirements at Chapter 35, sections 3515 and 3517.

K. Subpart III, Chapter 33, Administrative and Judicial Review of Permit Decisions

Section 3301 covers Mississippi's provisions for administrative review of decisions on permits. Section 3303 contains the requirements for judicial review of decisions of permits.

The Director finds that, with the exception of the provisions discussed below, the proposed regulation requirements contained in Chapter 33 are substantively the same as or similar to and no less effective than the counterpart Federal regulations under Subchapter G, 30 CFR Part 775.

1. Chapter 33, Section 3301(a), Formal Hearing Time Frames

At section 3301(a), Mississippi allows the applicant or any other interested party to request a formal hearing within 45 days after the Permit Board makes its decision to issue or deny a permit application and requires hearings to be conducted within sixty (60) days after receipt of the first request for a formal hearing. This section implements Mississippi's statutory requirements for formal hearing time frames at section 53–9–39(3) of the Mississippi Law. The Director approved the statutory requirements on January 9, 1998 (63 FR 1342).

The Federal regulation at 30 CFR 775.11(a) allows the applicant or any person with an interest which is or may be adversely affected to request a hearing within 30 days after the applicant is notified of the final decision and requires that administrative hearings on final permit decisions be held within 30 days of a request for hearing. The Director finds that allowing the applicant and interested persons 45 days to request a formal hearing will not render Mississippi's administrative review process less effective than the Federal requirements. However, in a letter dated October 23, 1997 (Administrative Record No. MS–0343), OSM expressed concern that Mississippi's statutory requirement for a 60-day rather than a 30-day time frame for holding a hearing may not be consistent with the Federal requirements. In its letter dated November 20, 1997 (Administrative Record No. MS–0346), Mississippi explained that the 60-day period stemmed from the Permit Board's procedures for holding a formal hearing. The formal hearing procedures require that direct testimony be submitted in writing, usually in affidavit form, with attached exhibits, prior to the hearing. All parties are given 30 days to submit initial testimony, and then are given 7 days to submit rebuttal testimony. The hearing normally is scheduled for 7 days after the filing of rebuttal testimony. At the hearing, cross-examination is allowed. This allows members of the public and community or environmental groups to participate in formal hearings, because the individuals or groups are given time to put their complaints and concerns in writing, rather than having to depend on the presentation of evidence through oral testimony. Taking into consideration the additional time that Mississippi allows the applicant and other interested persons to request a hearing and the formal hearing process explained above, the Director finds that Mississippi's time frame for holding a formal hearing is no less effective than the counterpart Federal provision at 30 CFR 775.11(a).

2. Chapter 33, Section 3301(b), Temporary Relief

Section 3301(b) provides that any party may file a petition for temporary relief from the notice of suspension or the notice of proposed suspension and rescission in conjunction with the filing of the request for a formal hearing or at any time before a final decision is issued by the Permit Board after a formal hearing. Subsections (b)(1) through (5) provide procedures for filing and conditions for granting temporary relief. The Director finds that the regulations under section 3301(b) are consistent with the counterpart Federal regulations at 43 CFR 4.1376 for granting temporary relief in conjunction with review of a notice of suspension or notice of proposed suspension, and the Director is approving them. However, the Federal regulations under 30 CFR 775.11(b)(2) and 43 CFR 4.1367 also provide for granting temporary relief in conjunction with all other administrative hearings of decisions on permits. Therefore, the Director is requiring Mississippi to amend section 3301(b) to add provisions for temporary relief that pertain to permit decisions in accordance with the Federal regulations at 30 CFR 775.11(b)(2) and 43 CFR 4.1367.

L. Subpart III, Chapter 19, General Requirements for Permits and Permit Applications

Sections 1907 and 1911 contain the permit application requirements for format and content, reporting of technical data, maps and plans, and completeness. Section 1909 covers Mississippi's requirements for permit fees.

1. Sections 1907 and 1911, General Requirements for Format and Contents

The proposed regulation requirements contained in Chapter 19, sections 1907 and 1911, are consistent with the general content requirements for permit applications found in the corresponding Federal regulations under Subchapter G at 30 CFR Part 777. Therefore, the Director finds that Mississippi's regulations for general content requirements for permit applications at sections 1907 and 1911 are no less effective than the requirements of the counterpart Federal regulations.

2. *Section 1909, Permit Fees*

Section 1909(a) requires the Commission to assess and collect a permit fee for reviewing the permit application and administering and enforcing a surface coal mining and reclamation permit. It also allows the Commission to set permit fees for the transfer, modification or reissuance of a surface coal mining and reclamation permit. The fees shall be set by order of the Commission in accordance with section 53–9–28 of the Mississippi Law. Section 1909(b) allows the Commission to establish a permit fee for the issuance, reissuance, transfer or modification of a coal exploration permit and a reasonable fee for a copy

of a transcript of a formal hearing. The fees shall be set by order of the Commission in accordance with section 53–9–28 of the Mississippi Law. Section 53–9–28 of the Mississippi Law provides that a permit fee may be less than, but shall not exceed the actual or anticipated direct and indirect costs of reviewing the permit application and administering and enforcing the permit. It also authorizes the Commission to establish procedures to allow the assessment and collection of the permit fee over the term of the permit.

The Federal regulation at 30 CFR 777.17 requires surface coal mining and reclamation permit applications to be accompanied by a fee as determined by the regulatory authority. It allows the fee to be less than, but requires the fee not to exceed, the actual or anticipated cost of reviewing, administering, and enforcing a permit. It also allows the regulatory authority to develop procedures which would enable the cost of the fee to be paid over the term of the permit. Therefore, the Director finds that the requirements of section 1909(a) in conjunction with the requirements of section 53–9–28 of the Mississippi Law are consistent with and no less effective than the counterpart Federal requirements at 30 CFR 777.17.

Although the Federal regulations contain no counterparts to section 1909(b) concerning permit fees for coal exploration permits and copies of formal hearing transcripts, the Director finds that Mississippi's proposed fee payment provision for coal exploration permits is not inconsistent with the Federal requirements for surface coal mining and reclamation permit application fees at 30 CFR 777.17 and finds that Mississippi's proposed fee payment provision for formal hearing transcripts is not inconsistent with the Federal provisions concerning fees for hearing transcripts at 43 CFR 4.23.

M. Subpart III, Chapter 23 and Chapter 31, Sections 3121(b) and (c), General Content Requirements for Permit Applications

Chapter 23 and Chapter 31, sections 3121(b) and (c), cover the minimum legal, financial, and compliance requirements and general information that must be contained in permit applications.

The Director finds that, with the exception of the provisions discussed below, the proposed regulation requirements contained in Chapter 23 and Chapter 31, sections 3121(b) and (c), are substantively the same as or similar to and no less effective than the minimum legal, financial, and compliance requirements and general information that must be contained in permit applications found in the corresponding Federal regulations under Subchapter G, 30 CFR Part 778.

1. Section 2305(d), Identification of Interests

Mississippi's proposed regulatory language in section 2305(d) is consistent with the Federal regulation at 30 CFR 778.13(f) as adopted on March 2, 1989 (54 FR 8982). Mississippi's regulation and the Federal regulation adopted on March 2, 1989, require permit applications to contain information pertaining to any surface coal mining operation owned or controlled by either the applicant or by any person who owns or controls the applicant. However, on January 31, 1997, the U. S. Court of Appeals for the District of Columbia Circuit invalidated portions of the language of the Federal regulation on which the proposed regulation is based because the Federal language was centered on the ownership and control rule, which the court found to exceed the mandate of section 510(c) of SMCRA. Subsequently, on April 21, 1997, OSM issued an interim final rule revising the language of 30 CFR 778.13(f) to reflect the court's decision. The new Federal regulation was modified to restrict its scope to operations owned or controlled by the applicant.

Therefore, Mississippi's proposed regulation has more stringent requirements for application information than the revised Federal regulation. Section 505(b) of SMCRA and the Federal regulation at 30 CFR 730.11(b) provide that any State law or regulation which provides for more stringent land use and environmental controls and regulations of coal exploration and surface coal mining and reclamation operations than do the provisions of SMCRA or the Federal regulations shall not be construed to be inconsistent with SMCRA or the Federal regulations. Therefore, the Director is approving Mississippi's regulation requirements at Chapter 23, section 2305(d).

2. Section 2307(c), Violation Information

Mississippi's proposed regulatory language in section 2307(c) is consistent with the Federal regulation at 30 CFR 778.14(c) as adopted on October 28, 1994. Mississippi's regulation and the Federal regulation adopted on October 28, 1994, require permit applications to contain information about unabated violations and other compliance data pertaining to the applicant and surface coal mining operations owned or controlled by either the applicant or by any person who owns or controls the applicant. However, on January 31, 1997, the U. S. Court of Appeals for the District of Columbia Circuit invalidated portions of the language of the Federal regulation on which the proposed regulation is based because the Federal language was centered on the ownership and control rule, which the court found to exceed the mandate of section 510(c) of SMCRA. Subsequently, on April 21, 1997, OSM issued an interim final rule revising the language of 30 CFR 778.14(c) to reflect the court's decision. The new Federal regulation was modified to restrict its scope to the applicant and operations owned or controlled by the applicant.

Therefore, Mississippi's proposed regulation has more stringent requirements for application compliance information than the revised Federal regulation. Section 505(b) of SMCRA and the Federal regulation at 30 CFR 730.11(b) provide that any State law or regulation which provides for more stringent land use and environmental controls and regulations of coal exploration and surface coal mining and reclamation operations than do the provisions of SMCRA or the Federal regulations shall not be construed to be inconsistent with SMCRA or the Federal regulations. Therefore, the Director is approving Mississippi's regulation requirements at Chapter 23, section 2307(c).

3. Additional Information Requirements

At section 2317, Mississippi is requiring each application to contain a list of all other licenses and permits needed by the applicant to conduct the proposed surface mining activities. At section 2319, Mississippi is requiring each application to identify, by name and address, the chancery clerk's office where the applicant will file a copy of the application for public inspection. At section 2325, the Permit Board may require additional information if it determines that the information is necessary in its decision-making process concerning the issuance, denial, modification, or revocation of a permit.

There are no Federal counterparts to these information requirements. However, the Director finds that the requirements are not unreasonable and are not inconsistent with any Federal requirements. Therefore, the Director is approving sections 2317, 2319, and 2325.

N. Subpart III, Chapter 25, Minimum Requirements for Information on Environmental Resources

Chapter 25 establishes the minimum requirements for information on environmental resources that must be included in applications for surface mining activities.

The proposed regulation requirements contained in Chapter 25, sections 2501, 2503, 2505, 2527, 2529, 2531, 2535, and 2537, are consistent with the minimum requirements for information on environmental resources that must be contained in permit applications found in the corresponding Federal regulations under Subchapter G, 30 CFR Part 779. Therefore, the Director finds that Mississippi's regulation requirements are no less effective than the counterpart Federal regulation requirements.

O. Subpart III, Chapter 25 and Chapter 27, Minimum Requirements for Reclamation and Operation Plans

Chapter 25 and Chapter 27 provide the minimum requirements for the mining operation and reclamation plan portions of applications for permits for surface mining activities.

The Director finds that, with the exception of the provisions discussed below, the proposed regulation requirements contained in Chapter 25, sections 2501, 2507, 2525, and 2533, and Chapter 27 concerning operation and reclamation plans are substantively the same as or similar to and no less effective than the requirements of the corresponding Federal regulations under Subchapter G, 30 CFR Part 780.

1. Chapter 25, Section 2507, General Requirements for Description of Hydrology and Geology

The introductory text to this section requires each application to contain a description of the geology, hydrology, and water quality and quantity of all lands within the proposed permit area, the adjacent area and the cumulative impact area, provided by, or under the direction of, a qualified Registered Professional Geologist or Registered Professional Engineer as required by the Department. The description shall include information on the characteristics of all surface water and ground water within the cumulative impact area and any water which will flow into or receive discharges of water from the cumulative impact area. The information shall be provided by the Department, to the extent that this data is available from an appropriate Federal or State agency.

There is no direct Federal counterpart to this regulatory language. However, the Director finds that these general requirements are not inconsistent with the Federal regulation requirements for geology and hydrology information at 30 CFR Part 780.

2. Chapter 25, Section 2509, Geology Description

Section 2509(b)(2)(D) requires that the geologic analyses of samples collected include a statement of the result of test borings or core sampling from the permit area. The statement shall include logs of the drill holes, the thickness of the coal seam, an analysis of the chemical properties of the coal, the sulphur content of any coal seam, chemical analysis of potentially acid or toxic forming sections of the overburden, and a chemical analysis of the stratum lying immediately underneath the coal to be mined. The Permit Board may find by a written determination that this requirement is unnecessary.

There is no direct Federal counterpart to this regulatory provision. However, the Director finds that the provision at section 2509(b)(2)(D) is not inconsistent with the Federal regulation requirements for geology at 30 CFR 780.22.

3. Chapter 27, Section 2707, Blasting Plan

Because of the physical nature of the unconsolidated overburden materials associated with coal and lignite in the State, Mississippi does not anticipate the need for blasting operations. However, just in case blasting should become necessary, Mississippi provided requirements for a blasting plan at section 2707.

The Director finds that, with the exception of the provisions discussed below, the proposed requirements at section 2707 are substantively the same as and no less effective than the Federal regulations at 30 CFR 780.13.

Section 2707(b) requires each blasting plan to include types and approximate amounts of explosives to be used for each type of blasting operation. Section 2707(c) requires the blasting plan to include a description of procedures and plans for recording and retention of information on drilling patterns, charge and packing of holes, types of fuses and detonation controls, and sequence and timing of firing holes. Section 2707(d) requires the blasting plan to include a description of blasting warning and site access control equipment and procedures. Section 2707(f) requires the blasting plan to include a description of plans for recording and reporting to the Department the results of preblasting surveys. Section 2707(g) requires the blasting plan to contain a description of unavoidable hazardous conditions for which deviation from the blasting schedule will be needed.

There are no direct Federal counterparts to these blasting plan requirements. However, the Director finds that the requirements at sections 2707(b), (c), (d), (f), and (g) are not inconsistent with the Federal regulation requirements for blasting plans at 30 CFR 780.13.

P. Subpart III, Chapter 25, Section 2539, and Chapter 29, Requirements for Permits for Special Categories of Mining

Chapter 25, section 2539, provides provisions relating to the prime farmland reconnaissance inspection of the proposed permit area. Chapter 29 establishes the minimum requirements for permits for special categories of surface coal mining and reclamation operations. The special categories include: experimental practices mining; steep slope mining; permits incorporating alternatives from approximate original contour restoration requirements for steep slope mining; prime farmlands; coal processing plants or support facilities not located within the permit area of a specified mine; and in situ processing activities.

The Director finds that, with the exception of the provision discussed below, the proposed regulation requirements contained in Chapter 29 and Chapter 25, section 2539, concerning special categories of mining, are substantively the same as or similar to and no less effective than the requirements of the corresponding Federal regulations under Subchapter G, 30 CFR Part 785.

1. Chapter 29, Section 2901, Experimental Practices Mining

Section 2901(b)(3)(B) requires an application for an experimental practice to contain descriptions, maps, plans, and data which show that the mining operations approved for particular land uses or other purposes are not larger or more numerous than necessary to determine the effectiveness and economic feasibility of the experimental practices.

There is no direct Federal counterpart to this provision. However, the Director finds that section 2901(b)(3)(B) is not inconsistent with the application requirements for experimental practices at 30 CFR 785.13(b).

2. Chapter 29, Section 2905, Permits Incorporating Alternatives From Approximate Original Contour Restoration Requirements for Steep Slope Mining

Mississippi added provisions pertaining to the applicability and objectives of section 2905. Section 2905(a) provides that section 2905 applies to steep slope surface coal mining and reclamation operations where the operation is not to be reclaimed to achieve the approximate original contour. Section 2905(b) specifies that the objective of section 2905 is to allow for an alternative to approximate original contour restoration requirements on steep slopes for surface coal mining and reclamation operations in order to improve watershed control of lands within the permit area and on adjacent lands and to make the land within the permit area suitable for an industrial, commercial, residential, or public use (including recreational facilities) after reclamation is completed.

There are no direct Federal counterparts to these provisions. However, the Director finds that sections 2905(a) and (b) are not inconsistent with the Federal requirements for permits incorporating alternatives from approximate original contour restoration requirements for steep slope mining at 30 CFR 785.16.

3. Chapter 25, Section 2539, and Chapter 29, Section 2907, Prime Farmland

Section 2539(b) requires the applicant to demonstrate that one of four criteria exists for land to be considered non-prime farmland: (1) The land has not been historically used as cropland; (2) the slope of the land is 10 percent or greater; (3) other factors exist, such as a very rocky surface, or the land is frequently flooded during the growing season, more often than once in two years, and the flooding has reduced crop yields; or (4) on the basis of a soil survey of lands within the permit area, there are no soil map units that have been designated prime farmland by the United States Natural Resources Conservation Service (NRCS). This demonstration must be submitted with the request for a negative determination under section 2539(d)(2).

There are no direct Federal counterpart provisions relating to the negative determination criteria at section 2539(b)(2) and (3), concerning land with slopes, rocky surfaces, or frequent flooding. However, Mississippi's proposed criteria are based on the limits that were used by the National Cooperative Soil Survey in describing and mapping prime farmland soils, and the limits still apply (May 12, 1983, 48 FR 21447). Guidance on these types of limits is also included in the NRCS regulations at 7 CFR 657.5, concerning identification of important farmlands. Therefore, the Director finds that the provisions at section 2539(b)(2) and (3) are not inconsistent with the requirements of the Federal regulations at 30 CFR 785.17.

Q. Subpart III, Chapter 37, Small Operator Assistance

This chapter establishes the procedures for providing assistance to eligible operators. The proposed regulation provisions contained in Subpart III, Chapter 37, concerning Mississippi's small operator assistance program, are consistent with the requirements of the corresponding Federal regulations under Subchapter H, 30 CFR part 795. Therefore, the Director finds that Mississippi's regulations are no less effective than the requirements of the counterpart Federal regulations.

R. Subpart IV, Bond and Insurance Requirements for Surface Coal Mining and Reclamation Operations

This subpart sets forth the minimum requirements for filing and maintaining bonds and insurance for surface coal mining and reclamation operations under the Mississippi program. Chapter 39 contains the general requirements for bonding of surface coal mining and reclamation operations under the Mississippi program. Chapter 41 covers the amount and duration of the performance bond. Chapter 43 pertains to the form, conditions, and terms of performance bonds and liability insurance. Chapter 45 concerns the procedures, criteria, and schedule for release of performance bonds. Chapter 47 covers performance bond forfeiture criteria and procedures.

The Director finds that, with the exception of the provisions discussed below, Mississippi's regulations for performance bond and liability insurance at Subpart IV are consistent with and no less effective than the Federal regulations at Subchapter J, 30 CFR Part 800.

1. Chapter 43, Section 4303, Terms and Conditions of the Bond

a. At section 4303(e), Mississippi added the following four conditions for surety bonds that are not contained in the counterpart Federal regulations at 30 CFR 800.20(b): (1) The Permit Board shall not accept surety bonds in excess of 10 percent of the surety company's capital surplus account as shown on the balance sheet certified by a certified public accountant, unless otherwise provided by law; (2) the Permit Board shall not accept surety bonds from a surety company for any person, on all permits held by that person, in excess of three times the company's maximum single obligation as provided by State law, or, in the absence of State law, as provided in section 4303(e)(2); (3) the Permit Board may provide in the bond that the amount shall be confessed to judgment upon forfeiture; and (4) the bond shall provide that the surety and the permittee shall be liable jointly and severally.

Similar provisions were removed from the Federal regulations on July 19, 1983 (48 FR 32931), in order to allow State regulatory authorities the discretion of establishing their own criteria for surety bonds in accordance with State law. This allows States to establish more stringent criteria in order to assure financial guarantee of the performance bonds. Section 505(b) of SMCRA and the Federal regulation at 30 CFR 730.11(b) provide that any State law or regulation which provides for more stringent land use and environmental controls and regulations of coal exploration and surface coal mining and reclamation operations than do the provisions of SMCRA or the Federal regulations shall not be construed to be inconsistent with SMCRA or the Federal regulations. Therefore, the Director is approving Mississippi's regulation requirements at Chapter 43, section 4303(e).

b. At section 4303(f), Mississippi added the following three conditions for collateral bonds that are not contained in the counterpart Federal regulations at 30 CFR 800.21(a): (1) The Permit Board shall require that all collateral bonds comply with the provisions of the definition of ''collateral bond'' at section 105; (2) the Permit Board shall only accept automatically renewable certificates of deposit; and (3) the Permit Board shall value certificates of deposit for full or partial fulfillment of the bond requirement at the certificate's face value and shall not allow future accrued interest to be considered in that valuation.

Similar provisions were removed from the Federal regulations on July 19, 1983 (48 FR 32931), in order to allow State regulatory authorities the flexibility to determine specific procedures concerning the acceptability of collateral bonds in accordance with State law. This allows States to establish more stringent criteria in order to assure financial guarantee of the performance bonds. Section 505(b) of SMCRA and the Federal regulation at 30 CFR

730.11(b) provide that any State law or regulation which provides for more stringent land use and environmental controls and regulations of coal exploration and surface coal mining and reclamation operations than do the provisions of SMCRA or the Federal regulations shall not be construed to be inconsistent with SMCRA or the Federal regulations. Therefore, the Director is approving Mississippi's regulation requirements at Chapter 43, section 4303(f).

c. At section 4303(g), Mississippi added the following three conditions for letters of credit that are not contained in the counterpart Federal regulations at 30 CFR 800.21(b): (1) The Permit Board shall not accept a letter of credit in excess of 10 percent of the bank's capital surplus account as shown on a balance sheet certified by a certified public accountant; (2) the Permit Board shall not accept letters of credit from a bank for any person, on all permits held by that person, in excess of three times the company's maximum single obligation as provided by State law or, in the absence of State law, as provided in section 4303(g)(4); and (3) the Permit Board may provide in the indemnity agreement that the amount shall be confessed to judgment upon forfeiture.

Similar provisions were removed from the Federal regulations on July 19, 1983 (48 FR 32931), in order to allow State regulatory authorities the flexibility to determine specific procedures concerning the acceptability of letters of credit in accordance with State law. This allows States to establish more stringent criteria in order to assure financial guarantee of the performance bonds. Section 505(b) of SMCRA and the Federal regulation at 30 CFR 730.11(b) provide that any State law or regulation which provides for more stringent land use and environmental controls and regulations of coal exploration and surface coal mining and reclamation operations than do the provisions of SMCRA or the Federal regulations shall not be construed to be inconsistent with SMCRA or the Federal regulations. Therefore, the Director is approving Mississippi's regulation requirements at Chapter 43, section 4303(g).

2. Chapter 45, Section 4501(c), Procedures for Seeking Release of Performance Bond

Mississippi's regulation at section 4501(c) allows written objections to the proposed bond release and requests for public hearings to be filed by any interested party, including any Federal, State, or local governmental agency which has jurisdiction with respect to any social or economic impact involved in the operation or which is authorized to develop and enforce environmental standards. Mississippi defines ''interested party'' to mean any person claiming an interest relating to the surface coal mining operation and who is so situated that the person may be affected by that operation, or in the matter of regulations promulgated by the Commission, any person who is so situated that the person may be affected by the action.

The counterpart Federal regulation at 30 CFR 800.40(f), section 519(f) of SMCRA, and section 53–9–65(3) of the Mississippi Law allow written objections to the proposed bond release and requests for public hearing to be filed by the same entities. But, they also allow Federal, State, or local governmental agencies which have special expertise with respect to any environmental, social or economic impact involved in the operation to file written objections and requests for public hearing. These agencies need not have jurisdiction by law or have a valid legal interest which might be adversely affected. Therefore, the Director is approving section 4501(c) to the extent that it allows written objections to the proposed bond release and requests for public hearings to be filed by any interested party, including any Federal, State, or local governmental agency which has jurisdiction with respect to any social or economic impact involved in the operation or which is authorized to develop and enforce environmental standards. However, the Director is requiring Mississippi to amend section 4501(c) to clarify that Federal, State, or local governmental agencies which have special expertise with respect to any environmental, social, or economic impact involved in the operation are also allowed to file written objections to the proposed bond release and requests for public hearing.

3. Chapter 47, Performance Bond Forfeiture Criteria and Procedures

At section 4703(a), Mississippi added the following four provisions concerning procedures for bond forfeiture that are not contained in the Federal regulations at 30 CFR 800.50:

(1) If a surface coal mining and reclamation operation is not proceeding in accordance with the act or the permit, the operation represents an imminent threat to the public health, welfare and the environment, and the operator has failed, within thirty (30) days after written notice to the operator and opportunity for a formal hearing, to take appropriate corrective action, a forfeiture proceeding may be commenced by the Commission against the operator for any performance bond or other collateral posted by the operator;

(2) A forfeiture proceeding against any performance bond or other collateral shall be commenced and conducted according to §§ 49–17–31 through 49–17–41;

(3) Forfeiture proceedings shall be before the Commission and an order of the Commission under this subsection shall be a final order. If the Commission determines that forfeiture of the performance bond or other collateral should be ordered, the Department shall have the immediate right to all funds of any performance bond or other collateral, subject only to review and appeals allowed under § 49–17–41; and

(4) If the operator cannot be located for purposes of notice, the Department shall send notice of the forfeiture proceeding, certified mail, return receipt requested, to the permittee's, surety's, and operator's last known address. The Department shall also publish notice of the forfeiture proceeding in the same manner as provided for the publication of notice for the advertisement of land ownership under § 53–9–37. Any formal hearing on the bond forfeiture shall be set at least thirty (30) days after the last notice publication.

At section 4705(b), Mississippi added provisions concerning criteria for bond forfeiture that are not contained in the Federal regulations at 30 CFR 800.50. A bond may be forfeited if the Commission finds that: (1) The permittee has become insolvent, failed in business, been adjudicated a bankrupt, filed a petition in bankruptcy or for a receiver or had a receiver appointed by any court; or (2) a creditor of the permittee has attached or executed a judgment against the permittee's equipment, materials, facilities at the permit area or on the collateral pledged to the Commission; and (3) the permittee cannot demonstrate or prove the ability to continue to operate in compliance with the Mississippi Law and regulations and the permit.

Similar provisions were removed from the Federal regulations on July 19, 1983 (48 FR 32931), in order to allow State regulatory authorities the discretion to determine specific procedures and criteria concerning bond forfeiture proceedings in accordance with State law. This allows States to establish more stringent procedures and criteria for forfeiture of performance bonds than do the minimum Federal standards. Section 505(b) of SMCRA and the Federal regulation at 30 CFR 730.11(b) provide that any State law or regulation which provides for more stringent land use and environmental controls and regulations of coal exploration and surface coal mining and reclamation operations than do the provisions of SMCRA or the Federal regulations shall not be construed to be

inconsistent with SMCRA or the Federal regulations. Therefore, the Director is approving Mississippi's regulation requirements at Chapter 47, section 4703(a) and 4705(b).

S. Subpart V, Chapters 49, 51, 53, 55, 57, 59, and 61, Permanent Program Performance Standards

These chapters set forth the minimum performance standards and design requirements under the Mississippi program for coal exploration and surface coal mining and reclamation operations. Chapter 49 contains general responsibility provisions. Chapter 51 covers the permanent program performance standards for coal exploration and development operations. Chapter 53 concerns the permanent program performance standards for surface mining activities. Chapter 55 pertains to special permanent program performance standards for prime farmland. Chapter 57 covers special permanent program performance standards for operations on steep slopes. Chapter 59 relates to special permanent program performance standards for coal preparation plants and support facilities not located at or near the minesite or not within the permit area for a mine. Chapter 61 contains special permanent program performance standards for in situ processing activities.

The Director finds that, with the exception of the provisions discussed below, Mississippi's regulations for permanent program performance standards at Subpart V are consistent with and no less effective than the Federal regulations under Subchapter K at 30 CFR Parts 810, 815, 816, 823, 827, and 828.

1. Chapter 53, Section 5313, Hydrologic Balance

At section 5313(b) and (c), Mississippi proposed two additional measures to minimize disturbance of the hydrologic balance. Section 5313(b) requires operations to minimize changes in water quality and quantity, in the depth of ground water, and in the location of surface-water drainage channels so that the approved post-mining land use of the permit area is not adversely affected. Section 5313(c) requires operations to be conducted to minimize water pollution and, where necessary, requires treatment methods must be used to control water pollution. Water pollution control methods required by the Permit Board are to be recommended by the Office of Geology in consultation with the Office of Pollution Control. The person who conducts surface mining activities must operate and maintain the necessary water treatment facilities for as long as treatment is required under Chapter 53.

There are no Federal counterparts to these provisions in 30 CFR 816.41. However, Mississippi's additional measures to minimize disturbance of the hydrologic balance are not inconsistent with any requirements of SMCRA or the Federal regulations at 30 CFR 816.41. Therefore, the Director is approving section 5313(b) and (c).

2. Chapter 53, Section 5333(b)(3)(A), Surface-Water Monitoring

Mississippi's provision at section 5333(b)(3)(A) allows the Permit Board to modify the monitoring requirements, including the parameters covered and sampling frequency, except those required by the National Pollutant Discharge Elimination System (NPDES) permitting authority. The modifications can be made if the operator demonstrates, using the monitoring data obtained under paragraph (b), that the operation has minimized disturbance to the hydrologic balance outside the permit and adjacent areas. The operator must also demonstrate that the operation has prevented material damage to the hydrologic balance outside the permit area, water quantity and quality are suitable to support approved postmining land uses, and the water rights of other users have been protected or replaced.

Mississippi's provision is substantively the same as the Federal provision at 30 CFR 816.41(e)(3)(i) with one exception. The Federal regulation requires the operator to demonstrate that the operation has minimized disturbance to the hydrologic balance ''in'' rather than ''outside'' the permit and adjacent areas. The Director finds that requiring the operator to demonstrate that the operation has minimized disturbance to the hydrologic balance outside the permit and adjacent areas, in addition to requiring the operator to demonstrate that the operation has prevented material damage to the hydrologic balance outside the permit area, would not make Mississippi's regulations less effective than the Federal regulations. Therefore, the Director is approving Mississippi's proposed language at section 5333(b)(3)(A). However, the Director is requiring Mississippi to amend section 5333(b)(3)(A) to require the operator to also demonstrate that the operation has minimized disturbance to the hydrologic balance in the permit and adjacent areas.

3. Chapter 53, Sections 5347, 5349, 5351, 5353, 5355, and 5357, Use of Explosives

Because of the physical nature of the unconsolidated overburden materials associated with coal and lignite in the State, Mississippi does not anticipate the need for blasting operations. However, just in case blasting should become necessary, Mississippi provided requirements for the use of explosives at sections 5347 through 5357.

The Director finds that, with the exception of the provision discussed below, the proposed requirements at sections 5347, 5349, 5351, 5353, 5355, and 5357 are substantively the same as or similar to and no less effective than the Federal requirements at 30 CFR 816.61, 816.62, 816.64, 816.66, 816.67, and 816.68.

At section 5347(d)(6), Mississippi is proposing the following requirement for blast designs:

> No blasting shall occur until the blast design is approved in writing by the Department. No blast design shall be approved by the Department unless it fulfills the requirements of § 53–9–25 and the blast plan is previously approved by the Permit Board.

Section 53–9–25(2)(c) of the Mississippi Law requires a blasting plan which outlines the procedures and standards by which the operator will meet the regulations promulgated by Mississippi.

There is no Federal counterpart requirement. However, the Director finds that section 5347(d)(6) is not inconsistent with the requirements of section 515(b)(15) of SMCRA or 30 CFR 816.61(d) of the Federal regulations.

4. Chapter 53, Section 5381, Air Resources Protection

Section 5381(a) requires each person who conducts surface mining activities to plan and employ fugitive dust control measures as an integral part of site preparation, coal mining and reclamation operations. Control measures appropriate for use in planning, according to applicable Federal and State air quality standards, climate, existing air quality in the area affected by mining, and the available control technology shall be approved by the Department.

Section 5381(b) includes a list of 19 fugitive dust control measures to be used, as necessary, depending on applicable Federal and State air quality standards, climate, existing air quality, size of operation and type of operation.

Section 5381(c) requires that where the Department determines that application of fugitive dust control

measures listed in section 5381(b) is inadequate, the Department may require additional measures and practices as necessary. It also specifies that nothing in its regulations will lessen the responsibility of a surface coal mining and reclamation operation to comply with the air pollution control regulations promulgated by the Commission and enforced through the Office of Pollution Control.

Section 5381(d) requires air monitoring equipment to be installed and monitoring to be conducted in accordance with the air monitoring plan required under section 2711.

Similar provisions were removed from the Federal regulations on January 10, 1983 (48 FR 1160), in response to them being remanded by the U.S. District Court for revision. The U.S. District Court remanded them because the legislative history of section 515(b)(4) of SMCRA ''indicates that the Secretary's authority to regulate [air] pollution is limited to activities related to erosion'' (*In re: Permanent Surface Mining Regulation Litigation, Civil Action 79–1144,* D.D.C., May 16, 1980, Id., slip op. at 28). Section 515(b)(4) of SMCRA requires operations to stabilize and protect all surface areas including spoil piles affected by the surface coal mining and reclamation operation to effectively control erosion and attendant air and water pollution. However, section 505(b) of SMCRA and the Federal regulation at 30 CFR 730.11(b) provide that any State law or regulation which provides for more stringent land use and environmental controls and regulations of coal exploration and surface coal mining and reclamation operations than do the provisions of SMCRA or the Federal regulations shall not be construed to be inconsistent with SMCRA or the Federal regulations. Therefore, the Director is approving Mississippi's regulations at Chapter 53, sections 5381 (a) through (d).

5. Chapter 53, Section 5389, Time and Distance Requirements for Backfilling and Grading

At section 5389(a) and (b), Mississippi proposed the following provisions relating to backfilling and grading:

(a) Except as provided in § 5389(b) of this section, rough backfilling and grading for surface mining activities shall be completed according to one of the following schedules:

(1) Contour mining. Within 60 days or 1,500 linear feet following coal removal; or

(2) Area mining. Within 180 days following coal removal, and not more than four spoil ridges behind the pit being worked, the spoil from the active pit constituting the first ridge.

(3) Other Surface Mining Methods. Rough backfilling and grading shall occur in accordance with the time schedule approved by the Permit Board, on the basis of the materials submitted under § 2715, which shall specifically establish in stated increments the period between surface mining activities and completion of backfilling and grading.

(b) The Department may extend the time allowed for rough back-filling and grading for the entire permit area or for a specified portion of the permit area if the permittee demonstrates in accordance with § 2715 that additional time is necessary.

The Federal time and distance standards for specific types of mining at 30 CFR 816.101 were suspended effective August 31, 1992 (57 FR 33875, July 31, 1992). Therefore, OSM must evaluate State time and distance requirements against the general contemporaneous reclamation requirements of section 515(b)(16) of SMCRA and 30 CFR 816.100 of the Federal regulations. Section 515(b)(16) of SMCRA requires that surface coal mining and reclamation operations be conducted so as to insure that all reclamation efforts proceed as contemporaneously as practicable with the surface coal mining operations. The Federal regulation at 30 CFR 816.100 similarly provides that backfilling and grading on all land that is disturbed by surface mining activities occur as contemporaneously as practicable with mining operations.

The effect of the suspension of 30 CFR 816.101 is that regulatory authorities may adopt backfilling and grading time and distance standards for various types of mining operations that are specific to the coal mining conditions in their States, as long as the standards result in contemporaneous mining and reclamation as required by section 515(b)(16) of SMCRA and 30 CFR 816.100. It is noted that Mississippi's regulation at Chapter 53, section 5387, requires that backfilling and grading on all land that is disturbed by surface mining activities occur as contemporaneously as practicable with mining operations. Mississippi's time and distance standards appear to be reasonable and provide additional specificity to its general contemporaneous reclamation requirements at section 5387. Therefore, the Director finds that the proposed regulations at section 5389 are not inconsistent with the Federal requirements for contemporaneous reclamation for surface mining activities at section 515(b)(16) of SMCRA or 30 CFR 816.100.

6. Chapter 53, Section 53101, Mulching and Other Soil Stabilizing Practices

At section 53101(b) through (d), Mississippi proposed the following specific criteria pertaining to soil stabilizing practices:

(b) When required by the Permit Board, mulches shall be mechanically or chemically anchored to the soil surface to assure effective protection of the soil and vegetation.

(c) Annual grasses and grains may be used alone, as in situ mulch, or in conjunction with another mulch, when the Permit Board determines that they will provide adequate soil erosion control and will later be replaced by perennial species approved for the post-mining land use

(d) Chemical soil stabilizers alone, or in combination with appropriate mulches, may be used in conjunction with vegetative covers approved for the post-mining land use.

There are no Federal counterparts to the specific criteria proposed by Mississippi. However, the Federal regulation at 30 CFR 816.114 and Mississippi's regulation at section 53101(a) require that suitable mulch and other soil stabilizing practices be used on all regraded and topsoiled areas, unless waived for specified reasons. Mississippi's provisions at section 53101(b) through (d) appear to be reasonable and provide additional specificity to its general mulching and other soil stabilizing practices at section 53101(a). Therefore, the Director is approving the proposed provisions.

7. Chapter 53, Section 53103, Revegetation Standards for Success

Section 53103 covers provisions relating to standards for success in establishing postmining vegetation, the period of extended responsibility for successful revegetation, and normal husbandry practices.

Mississippi's proposed regulations at section 53103(a) are substantively the same as the Federal regulations at 30 CFR 816.116(a) relating to success of revegetation. Its proposed regulations at section 53103(b) are substantively the same as the Federal regulations at 30 CFR 816.116(c)(1), (2), and (4) relating to the period of extended responsibility for successful revegetation and selective husbandry practices. Therefore, the Director is approving Mississippi's regulations at section 53103(a) and (b).

Mississippi did not propose counterparts to the Federal regulations at 30 CFR 816.116(b), which provide minimum conditions that must be addressed by all standards for success. These conditions are applicable to all State programs and are used as a basis for developing detailed revegetation success standards. Mississippi also did not include in its revised program the standards for success and statistically valid sampling techniques for measuring success that are required by 30 CFR 816.116. Therefore, the Director

is requiring Mississippi to amend its regulatory program to include both counterparts to the Federal regulations at 30 CFR 816.116(b) and revegetation guidelines with detailed success standards and sampling techniques for measuring success.

8. Chapter 55, Section 5505, Prime Farmland Soil Replacement

Section 5505(b) requires operators to replace soil material only on land which has been first returned to final grade and scarified according to sections 5389 through 5395, unless site-specific evidence is provided and approved by the Permit Board showing that scarification will not enhance the capability of the reconstructed soil to achieve equivalent or higher levels of yield. Sections 5389 through 5395 cover Mississippi's requirements for backfilling and grading.

Section 5505(f) requires operators to apply nutrients and soil amendments as needed to quickly establish vegetative growth.

There are no direct Federal counterparts to Mississippi's proposed provisions. However, the Director finds that the requirements at section 5505(b) and (f) are not inconsistent with the Federal requirements for prime farmland at section 515(b)(7) of SMCRA or 30 CFR 823 of the Federal regulations.

T. Subpart V, Chapters 63, 65, 67, and 69, Permanent Program Inspection and Enforcement Procedures

These chapters set forth the requirements for inspection and enforcement of coal exploration and surface coal mining and reclamation operations under the Mississippi program. Chapter 63 covers the requirements for inspections. Chapter 65 pertains to the requirements for enforcement. Chapter 67 provides the requirements for civil penalties. Chapter 69 relates to the requirements for individual civil penalties.

The Director finds that, with the exception of the provisions discussed below, Mississippi's regulations for inspection and enforcement at Subpart V are substantively the same as and no less effective than the Federal regulations under Subchapter L at 30 CFR Parts 840, 842, 843, 845, and 846.

1. Chapter 65, Section 6501, Cessation Orders

Section 6501(c)(4) specifies that the cessation order ''shall remain in effect until the condition, practice or violation has been abated or until vacated, modified or terminated in writing by the executive director or his or her authorized representative or until the order expires pursuant to § 53–9–69 or this section.''

Mississippi's regulation is substantively the same as the counterpart Federal regulation at 30 CFR 843.11(c)(4) with one exception. The Federal regulation requires a cessation order to remain in effect until the order expires pursuant to section 521(a)(5) of SMCRA and 30 CFR 843.15. Mississippi's statute at section 53–9–69 does not contain a counterpart to section 521(a)(5) of SMCRA. Thus, Mississippi's reference to ''§ 53–9–69 or this section'' does not have the same meaning as the Federal reference to section 521(a)(5) of SMCRA and 30 CFR 843.15. Therefore, the Director is approving section 6501(c)(4) with the exception of the language ''or until the order expires pursuant to § 53–9–69 or this section.'' The Director is requiring Mississippi to amend this language by replacing the reference to ''§ 53–9–69 or this section'' with a reference to ''section 6509,'' which is a counterpart to the Federal reference of 30 CFR 843.15.

2. Chapter 65, Section 6511, Formal Review of Citations

a. Section 6511(a) allows any interested party aggrieved by an action of the Commission, Executive Director or Executive Director's authorized representative taken pursuant to the Mississippi Law or regulations to request a formal hearing before the Commission as provided in sections 53–9–77 and 49–17–41 of the Mississippi Law.

As discussed in Finding C.28.a of the approval of Mississippi's statutes on January 9, 1998 (63 FR 1342), Mississippi removed its counterpart to section 525(a)(2) of SMCRA. Section 525(a)(2) of SMCRA and 43 CFR 4.1167 of the Federal regulations require that a permittee who is issued a notice or order and other interested parties who request formal review shall be given written notice of the time and place of an enforcement hearing at least five working days prior to the hearing. Mississippi's statute at section 53–9–77 and its regulation at section 6511(a) provide for a hearing under section 49–17–41 of the Mississippi Code of 1972 for enforcement actions. Section 49–17–41 requires the Commission to fix the time and place of such hearing and to notify those who requested the hearing. However, neither the statutes nor the regulations contain a time frame for notification. OSM approved section 53–9–77 of the Mississippi Law with the proviso that Mississippi would add the five-working-day notification requirement to its revised regulations. Mississippi did add a five-working-day notification requirement to its regulations at section 6511(n)(3) relating to expedited hearings. However, OSM's requirement was for formal hearings as provided by sections 53–9–77 and 49–17–41 relating to notices of violation and orders of cessation which are not subject to expedited review.

Therefore, the Director is requiring Mississippi to amend its regulations to provide the permittee and other interested persons written notice of the time and place of an enforcement hearing provided by sections 53–9–77 and 49–17–41 at least five days prior to such hearing, or otherwise amend its program, to be no less stringent than section 525(a)(2) of SMCRA and no less effective than the requirements of 43 CFR 4.1167 of the Federal regulations.

b. Section 6511(c) allows the person to whom a notice of violation or cessation order is directed to apply to the Commission for temporary relief from the notice or order.

Mississippi's regulation at section 6511(c) limits the application for temporary relief to the person to whom a notice of violation or cessation order is directed. The Federal regulation at 43 CFR 4.1261 allows an application for temporary relief to be filed by any party to a proceeding. Because this would include the person to whom a notice of violation or cessation order is directed, the Director is approving Mississippi's proposed language. However, the Federal regulation allows all other parties to a proceeding to apply for temporary relief, not just the person to whom a notice of violation or cessation order is directed; therefore, the Director is requiring that Mississippi amend section 6511(c) to allow any party to a proceeding to apply for temporary relief.

c. Section 6511(l) allows any person qualified to receive a 30-day decision to waive that right: (1) by filing an application under section 6511(c); (2) by failing to comply with all the requirements of section 6511(h) and (i); or (3) in accordance with section 6511(n)(8).

Mississippi's regulation is substantively the same as the counterpart Federal regulation at 43 CFR 4.1186(a) with one exception. As written, the first waiver criterion in section 6511(l)(1) provides that a person may waive the right for a 30-day decision by filing an application for temporary relief under section 6511(c). The Federal regulation at 43 CFR 4.1181 and Mississippi's proposed regulation at section 6511(h) allow the filing of an application for expedited review of an order of cessation whenever temporary

relief has not been granted. The filing of a request for temporary relief under section 6511(c) should not be a reason for waiving a person's right to an expedited review. Therefore, with the exception of the first waiver criterion at section 6511(l)(1), the Director is approving section 6511(l). Furthermore, the Director is requiring Mississippi to remove section 6511(l)(1) or amend it by removing the reference to section 6511(c) and adding a reference to section 6511(a). Section 6511(a) pertains to a request for a formal hearing under sections 43–9–77 and 49–17–41. This would be consistent with the counterpart Federal regulation at 43 CFR 4.1186(a)(1) that allows any person qualified to receive a 30-day decision to waive that right by filing an application under 43 CFR 4.1160 through 4.1171, which pertains to an application for review of notices of violation and orders of cessation that are not subject to expedited review.

d. Section 6511(n)(9) allows any party desiring to appeal a decision of the Commission, granting or denying temporary relief, to appeal to and seek relief from the appropriate chancery court pursuant to section 53–9–77.

Because section 6511(n) pertains to expedited review proceedings, the language ''granting or denying temporary relief'' is not appropriate for section 6511(n)(9). However, the Federal regulation at 43 CFR 4.1271 allows aggrieved parties to appeal decisions relating to expedited review proceedings. Therefore, the Director is approving Mississippi's provision with the exception of the language ''granting or denying temporary relief.'' Accordingly, the Director is requiring Mississippi to remove this language and to amend section 6511(n)(9) to clarify that it relates to an expedited review of an order of cessation.

U. Subpart V, Chapter 71, Petitions for Award of Costs and Expenses

Chapter 71, section 7101 allows any person to file a petition for award of costs and expenses including attorney's fees reasonably incurred as a result of that person's participation in any administrative proceeding under the Mississippi Law which results in a final order being issued by the Commission or in a permit action or bond release action being taken by the Permit Board. Section 7103 provides information on where to file and the time for filing petitions. Section 7105 specifies the contents of the petitions. Section 7107 provides information on filing an answer to a petition. Section 7109 specifies who may receive an award. Section 7113 allows an appeal of a decision concerning awards.

Mississippi's regulations at Chapter 71 are substantively identical to the counterpart Federal regulations at 43 CFR 4.1290 through 4.1296. Therefore, the Director is approving them.

V. Policy Statement No. PS–1, Blaster Certification Requirements, Surface Coal Mining and Reclamation Operations

To satisfy the blaster certification requirements at 30 CFR part 850, Mississippi submitted a policy statement entitled ''Blasters Certification Requirement Policy Statement No. PS–1'' (Administrative Record No. MS–0368). At section 5347(c), Mississippi requires that all blasting operations in the State be conducted under the direction of a certified blaster and in accordance with Policy Statement No. PS–1. In this policy statement, Mississippi commits to developing a valid blaster certification program in accordance with 30 CFR Part 850 should blasting become necessary. Because of the physical nature of the unconsolidated overburden materials associated with coal and lignite in the State, Mississippi anticipates that there will be no blasting operations necessary for surface coal mining and reclamation operations permitted under its program. Furthermore, until such a certification program is in place, Mississippi would recognize and accept as valid a current blaster's certification legitimately obtained from any other State or Federal regulatory authority having a blaster certification program in accordance with 30 CFR Part 850. The Department will require evidence of certification prior to any blasting operations being conducted under the Mississippi program.

Based on the above discussion, the Director finds that Policy Statement No. PS–1 in conjunction with Mississippi's proposed provisions at section 5347(c) satisfy the blaster certification requirements at 30 CFR part 850. Therefore, the Director is approving Policy Statement No. PS–1 as part of the Mississippi program.

IV. Summary and Disposition of Comments

Public Comments

OSM solicited public comments on the proposed amendment, but none were received.

Federal Agency Comments

Pursuant to 30 CFR 732.17(h)(11)(i), the Director solicited comments on the proposed amendment from various Federal agencies with an actual or potential interest in the Mississippi program (Administrative Record No. MS–0356).

By letter dated April 29, 1998 (Administrative Record No. MS–0362), the U.S. Army Corps of Engineers commented that it found the proposed amendment to be satisfactory. By letter dated May 8, 1998 (Administrative Record No. MS–0365), the Mine Safety and Health Administration (MSHA) commented that the proposed amendment does not appear to be in conflict with MSHA regulations.

Environmental Protection Agency (EPA)

Pursuant to 30 CFR 732.17(h)(11)(ii), OSM is required to obtain the written concurrence of the EPA with respect to those provisions of the proposed program amendment that relate to air or water quality standards promulgated under the authority of the Clean Water Act (33 U.S.C. 1251 *et seq.*) or the Clean Air Act (42 U.S.C. 7401 *et seq.*).

On May 13, 1998, OSM solicited the EPA's concurrence with the proposed amendment (Administrative Record No. MS–0364). On August 5, 1998, OSM received EPA's written concurrence (Administrative Record No. MS–0369).

State Historical Preservation Officer (SHPO) and the Advisory Council on Historic Preservation (ACHP)

Pursuant to 30 CFR 732.17(h)(4), OSM is required to solicit comments on proposed amendments which may have an effect on historic properties from the SHPO and ACHP. On April 2, 1998, OSM solicited comments on the proposed amendment from the SHPO and ACHP (Administrative Record No. MS–0356).

The SHPO, Mississippi Department of Archives and History, responded on April 15, 1998 (Administrative Record No. MS–0359). The SHPO recommended revisions to Chapter 11, section 1105(c) and (g) and section 1107(f)(1), of Mississippi's proposed regulations that would ensure conformance of the amendment with the Mississippi State Antiquities Law (39–7–3, et seq. of the Mississippi Code of 1972, as amended) and with the 36 CFR 800 regulations implementing Section 106 of the National Historic Preservation Act of 1966, as amended.

As discussed in Finding No. G, Mississippi's proposed regulations contained in Subpart II, Chapters 9, 11, 13, and 15, have provisions that are substantively the same as and no less effective than the requirements of the corresponding Federal regulations in Subchapter F, 30 CFR Parts 761, 762,

and 764. These would include the provisions at sections 1105(c) and (g) and 1107(f)(1). Therefore, OSM is not requiring Mississippi to make revisions to these regulations. However, the Mississippi Department of Archives and History's recommended revisions would not make Mississippi's regulations less effective than the counterpart Federal regulations, and they were forwarded to the Mississippi regulatory authority for consideration in any future program amendments.

V. Director's Decision

Based on the above findings, the Director approves, with exceptions and additional requirements, the proposed amendment as submitted by Mississippi on March 26, 1998.

With exceptions and requirements that Mississippi further revise its regulations, the Director approves, as discussed in Finding No. K.2., section 3301(b), concerning temporary relief; Finding No. R.2., section 4501(c), concerning procedures for seeking release of performance bonds; Finding No. S.2., section 5333(b)(3)(A), concerning surface-water monitoring; Finding No. S.7., section 53103, revegetation standards for success; Finding No. T.1., section 6501(c)(4), cessation orders; Finding No. T.2.a., section 6511(a), time frame for notification of hearings; Finding No. T.2.b., section 6511(c), concerning an application for temporary relief; Finding No. T.2.c., section 6511(l)(1), concerning waiver of the right for a 30-day expedited hearing; and Finding No. T.2.d., section 6511(n)(9), concerning the appeal of a decision granting or denying temporary relief.

As discussed in Finding No. A.4., the Director is removing 30 CFR 924.10(b), concerning the disapproved provisions of the original Mississippi Program.

As discussed in Finding Nos. A.5. and I.3., the Director is removing the required program amendments at 30 CFR 924.16(a) and (e).

The Federal regulations at 30 CFR Part 924, codifying decisions concerning the Mississippi program, are being amended to implement this decision. This final rule is being made effective immediately to expedite the State program amendment process and to encourage States to bring their programs into conformity with the Federal standards without undue delay. Consistency of State and Federal standards is required by SMCRA.

Effect of Director's Decision

Section 503 of SMCRA provides that a State may not exercise jurisdiction under SMCRA unless the State program is approved by the Secretary. Similarly, 30 CFR 732.17(a) requires that any alteration of an approved State program be submitted to OSM for review as a program amendment. In the oversight of the Mississippi program, the Director will recognize only the statutes, regulations and other materials approved by OSM, together with any consistent implementing policies, directives and other materials, and will require the enforcement by Mississippi of only such provisions.

VI. Procedural Determinations

Executive Order 12866

This rule is exempted from review by the Office of Management and Budget (OMB) under Executive Order 12866 (Regulatory Planning and Review).

Executive Order 12988

The Department of the Interior has conducted the reviews required by section 3 of Executive Order 12988 (Civil Justice Reform) and has determined that, to the extent allowed by law, this rule meets the applicable standards of subsections (a) and (b) of that section. However, these standards are not applicable to the actual language of State regulatory programs and program amendments since each such program is drafted and promulgated by a specific State, not by OSM. Under sections 503 and 505 of SMCRA (30 U.S.C. 1253 and 1255) and 30 CFR 730.11, 732.15, and 732.17(h)(10), decisions on proposed State regulatory programs and program amendments submitted by the States must be based solely on a determination of whether the submittal is consistent with SMCRA and its implementing Federal regulations and whether the other requirements of 30 CFR parts 730, 731, and 732 have been met.

National Environmental Policy Act

No environmental impact statement is required for this rule since section 702(d) of SMCRA (30 U.S.C. 1292(d)) provides that agency decisions on proposed State regulatory program provisions do not constitute major Federal actions within the meaning of section 102(2)(C) of the National Environmental Policy Act (42 U.S.C. 4332(2)(C)).

Paperwork Reduction Act

This rule does not contain information collection requirements that require approval by OMB under the Paperwork Reduction Act (44 U.S.C. 3507 *et seq.*).

Regulatory Flexibility Act

The Department of the Interior has determined that this rule will not have a significant economic impact on a substantial number of small entities under the Regulatory Flexibility Act (5 U.S.C. 601 *et seq.*). The State submittal which is the subject of this rule is based upon corresponding Federal regulations for which an economic analysis was prepared and certification made that such regulations would not have a significant economic effect upon a substantial number of small entities. Accordingly, this rule will ensure that existing requirements previously promulgated by OSM will be implemented by the State. In making the determination as to whether this rule would have a significant economic impact, the Department relied upon the data and assumptions for the corresponding Federal regulations.

Unfunded Mandates

OSM has determined and certifies pursuant to the Unfunded Mandates Reform Act (2 U.S.C. 1502 *et seq.*) that this rule will not impose a cost of $100 million or more in any given year on local, State, or tribal governments or private entities.

List of Subjects in 30 CFR Part 924

Intergovernmental relations, Surface mining, Underground mining.

Dated: August 6, 1998.

Brent Wahlquist,

Regional Director, Mid-Continent Regional Coordinating Center.

For the reasons set out in the preamble, 30 CFR Part 924 is amended as set forth below:

PART 924—MISSISSIPPI

1. The authority citation for part 924 continues to read as follows:

Authority: 30 U.S.C. 1201 *et seq.*

§ 924.10 [Amended]

2. Section 924.10 is amended by removing and reserving paragraph (b).

3. Section 924.15 is amended in the table by adding a new entry in chronological order by ''Date of final publication'' to read as follows:

§ 924.15 Approval of Mississippi regulatory program amendments.

* * * * *

Original amendment submission date	Date of final publication	Citation/description
*	*	*
March 26, 1998	August 13, 1998.	Subpart I, Chapters 1 through 7; Subpart II, Chapters 9 through 15; Subpart III, Chapters 17 through 37; Subpart IV, Chapters 39 through 47; Subpart V, Chapters 49 through 71; Policy Statement No. PS–1.

4. Section 924.16 is amended by removing and reserving paragraphs (a) and (e) and by adding paragraphs (f), (g), (h), (i), (j), (k), (l), (m), and (n) to read as follows:

§ 924.16 Required program amendments.

* * * * *

(f) By November 12, 1998, Mississippi must submit either a proposed amendment or a description of an amendment to be proposed, together with a timetable for adoption of proposed revisions to section 3301(b) of the State of Mississippi Surface Coal Mining Regulations to add provisions for temporary relief that pertain to permit decisions in accordance with the Federal regulations at 30 CFR 775.11(b)(2) and 43 CFR 4.1367.

(g) By November 12, 1998, Mississippi must submit either a proposed amendment or a description of an amendment to be proposed, together with a timetable for adoption of proposed revisions to section 4501(c) of the State of Mississippi Surface Coal Mining Regulations to clarify that Federal, State, or local governmental agencies which have special expertise with respect to any environmental, social, or economic impact involved in the operation are allowed to file written objections to the proposed bond release and requests for public hearing.

(h) By November 12, 1998, Mississippi must submit either a proposed amendment or a description of an amendment to be proposed, together with a timetable for adoption of proposed revisions to section 5333(b)(3)(A) of the State of Mississippi Surface Coal Mining Regulations to require the operator to also demonstrate that the operation has minimized disturbance to the hydrologic balance in the permit and adjacent areas.

(i) By November 12, 1998, Mississippi must submit either a proposed amendment or a description of an amendment to be proposed, together with a timetable for adoption of proposed revisions to section 53103 of the State of Mississippi Surface Coal Mining Regulations, or otherwise amend its program, to include counterparts to the Federal regulations at 30 CFR 816.116(b) and revegetation guidelines with detailed success standards and sampling techniques for measuring success.

(j) By November 12, 1998, Mississippi must submit either a proposed amendment or a description of an amendment to be proposed, together with a timetable for adoption of proposed revisions to section 6501(c)(4) of the State of Mississippi Surface Coal Mining Regulations to amend the language ''or until the order expires pursuant to § 53–9–69 or this section'' by replacing the reference to ''§ 53–9–69 or this section'' with a reference to ''section 6509.''

(k) By November 12, 1998, Mississippi must submit either a proposed amendment or a description of an amendment to be proposed, together with a timetable for adoption of proposed revisions to section 6511(a) of the State of Mississippi Surface Coal Mining Regulations to provide the permittee and other interested persons written notice of the time and place of an enforcement hearing provided by sections 53–9–77 and 49–17–41 at least five days prior to such hearing, or otherwise amend its program, to be no less stringent than section 525(a)(2) of SMCRA and no less effective than the requirements of 43 CFR 4.1167 of the Federal regulations.

(l) By November 12, 1998, Mississippi must submit either a proposed amendment or a description of an amendment to be proposed, together with a timetable for adoption of proposed revisions to section 6511(c) of the State of Mississippi Surface Coal Mining Regulations to allow any party to a proceeding to apply for temporary relief, not just the person to whom a notice of violation or cessation order is directed.

(m) By November 12, 1998, Mississippi must submit either a proposed amendment or a description of an amendment to be proposed, together with a timetable for adoption of proposed revisions to section 6511(l) of the State of Mississippi Surface Coal Mining Regulations to remove section 6511(l)(1) or to amend it by removing the reference to section 6511(c) and adding a reference to section 6511(a).

(n) By November 12, 1998, Mississippi must submit either a proposed amendment or a description of an amendment to be proposed, together with a timetable for adoption of proposed revisions to section 6511(n)(9) of the State of Mississippi Surface Coal Mining Regulations to remove the language ''granting or denying temporary relief'' and to clarify that it relates to an expedited review of an order of cessation.

[FR Doc. 98–21730 Filed 8–12–98; 8:45 am]

BILLING CODE 4310–05–P

DEPARTMENT OF TRANSPORTATION

Coast Guard

33 CFR Part 100

[CGD07–98–049]

Special Local Regulations; West Palm Beach, FL

AGENCY: Coast Guard, DOT.

ACTION: Temporary final rule.

SUMMARY: Temporary Special Local Regulations are being adopted for the Palm Beach County Offshore Grand Prix Festival & Air Show. The event will be held in two separate locations at separate times: (1) from 9 a.m. to 10 p.m. Eastern Daylight Time (EDT) on August 13, 14, 15 and 16, 1998, for a watercraft exhibition area, west of the ICW channel between the Royal Palm bascule bridge and Lake Worth LT 12 (LLNR 46875) and; (2) from 8 a.m. to 4 p.m. EDT on August 15 and 16, 1998, for the racecourse and airshow area east of Singer Island in the Atlantic Ocean, north of the Lake Worth Inlet. The regulations are needed to provide for the safety of life on navigable waters during the event.

DATES: These regulations become effective from 9 a.m. to 10 p.m. EDT on August 13, 14, 15 and 16, 1998, with respect to the watercraft exhibition area and from 8 a.m. to 4 p.m. on August 15

and 16, 1998, for the racecourse and airshow area.

FOR FURTHER INFORMATION CONTACT: LT J.A. Delgado Coast Guard Group Miami, Florida at (305) 535–4409.

SUPPLEMENTARY INFORMATION:

Background and Purpose

The Palm Beach Offshore Club is sponsoring a high speed power boat race and air show with approximately 60 race boats ranging in length from 12 to 50 feet, and several aircraft participating in the event. There will be approximately five hundred (500) spectator craft. The aircraft show and high speed race will take place offshore Singer Island in the Atlantic Ocean. The race boats and aircraft will be participating at high speeds with numerous spectator crafts in the area, creating an extra or unusual hazard in the navigable waterways. Additionally, inflatable boats, jet skis, and demonstration boats will be performing in a regulated area west of the ICW channel in West Palm Beach. These regulated areas created below prohibit entry to nonparticipating vessels during the events.

In accordance with 5 U.S.C. 553, a notice of proposed rulemaking has not been published for these regulations. Following normal rulemaking procedures would have been impracticable, as there was not sufficient time remaining after the receipt of the permit request to publish proposed rules in advance of the event or to provide for a delayed effective date.

Regulatory Evaluation

This regulation is not a significant regulatory action under section 3(f) of Executive Order 12866 and does not require an assessment of potential costs and benefits under section 6(a)(3) of that order. The Office of Management and Budget has exempted it from review under that order. It is not significant under the regulatory policies and procedures of the Department of Transportation (DOT) (44 FR 11040; February 26, 1979). The Coast Guard expects the economic impact of this proposal to be so minimal that a full Regulatory Evaluation under paragraph 10e of the regulatory policies and procedures of DOT is unnecessary. Entry into the regulated areas is prohibited for only approximately 13 hours each day of the event and the regulated areas do not block any channels.

Small Entities

Under the Regulatory Flexibility Act (5 U.S.C. 601 *et seq.*), the Coast Guard must consider whether this rule will have a significant economic impact on a substantial number of small entities. ''Small entities'' include small businesses, not-for-profit organizations that are independently owned and operated and are not dominant in their field, and governmental jurisdictions with populations of less than 50,000.

Therefore, the Coast Guard certifies that this rule will not have a significant economic impact on a substantial number of small entities, as the regulations will only be in effect a total of four days in areas of limited commercial traffic.

Federalism

This action has been analyzed in accordance with the principles and criteria contained in Executive Order 12612, and it has been determined that the rulemaking does not have sufficient federalism implications to warrant the preparation of a Federalism Assessment.

Environmental Assessment

The Coast Guard has considered the environmental impact of this action and has determined under Figure 2–1, paragraph 35(b) of Commandant Instruction M16475.1C, that this rule is categorically excluded from further environmental documentation. A Categorical Exclusion Determination document has been prepared and is available for inspection or copying in the docket.

List of Subjects in 33 CFR Part 100

Marine safety, Navigation (water), Reporting and recordkeeping requirements, Waterways.

Temporary Regulations

In consideration of the foregoing, the Coast Guard amends Part 100 of title 33, Code of Federal Regulations, as follows:

PART 100—[AMENDED]

1. The authority citation for Part 100 continues to read as follows:

Authority: 33 U.S.C. 1233, 49 CFR 1.46 and 33 CFR 100.35.

2. Temporary § 100.35T–07–049 is added to read as follows:

§ 100.35T–07–049 Palm Beach Grand Prix and Air Show, West Palm Beach, FL

(a) *Regulated Areas.* The following are regulated areas (All coordinates referenced use Datum NAD:83):

(1) *Watercraft Exhibition Area:* All waters west of the channel of the Introcoastal Waterway between the Royal Palm bascule bridge north to Lake Worth LT 12 (LLNR 46875) in approximate position 26–42.54N, 080–02.5W.

(2) *Racecourse/Airshow Area:* All waters of the Atlantic Ocean west of a line drawn from 26–46.82N, 080–01.26W to 26–49.37N, 080–01.26W.

(b) *Special local regulations.*

(1) Entry into the regulated areas by other than event participants is prohibited unless otherwise authorized by the Patrol Commander. At the completion of scheduled races and exhibitions, and departure of participants from the regulated areas, traffic may resume normal operations. At the discretion of the Patrol Commander, between scheduled racing events, traffic may be permitted to resume normal operations.

(2) A succession of not fewer than 5 short whistle or horn blasts from a patrol vessel will be the signal for any and all vessels to take immediate steps to avoid collision. The display of an orange distress smoke signal from a patrol vessel will be the signal for any and all vessels to stop immediately.

(3) Spectators are required to maintain a safe distance from the racecourse at all times.

(c) *Dates.* This section is effective from 9 a.m. to 10 p.m. EDT on August 13, 14, 15 and 16, 1998, for the regulated area described in paragraph (a)(1) of this section, and from 8 a.m. to 4 p.m. EDT on August 15 and 16, 1998, for the regulated area described in paragraph (a)(2) of this section.

Dated: July 30, 1998.

R.C. Olsen, Jr.,

Captain, U.S. Coast Guard, Acting Commander, Seventh Coast Guard District.

[FR Doc. 98–21801 Filed 8–12–98; 8:45 am]

BILLING CODE 4910–15–M

DEPARTMENT OF TRANSPORTATION

Coast Guard

33 CFR Part 117

[CGD05–98–015]

RIN 2115–AE47

Drawbridge Operation Regulations; Grassy Sound Channel, Middle Township, NJ

AGENCY: Coast Guard, DOT.

ACTION: Final rule.

SUMMARY: The Coast Guard is changing the regulations that govern the operation of the drawbridge across Grassy Sound Channel, mile 1.0, in Middle Township, New Jersey, by requiring two-hours advance notice for bridge openings from October 1 to May 14, and from 8 p.m. to 6 a.m. each day from May 15 to September 30. The bridge will be

unattended during these time periods and requests for openings shall require calling (609) 368–4591. This rule will help lessen the high cost of manning the drawbridge 24 hours a day while still providing for the reasonable needs of navigation.

DATES: This final rule is effective on September 14, 1998.

ADDRESSES: Documents as indicated in this preamble are available for inspection or copying at the office of the Commander (Aowb), Fifth Coast Guard District, Federal Building, 4th Floor, 431 Crawford Street, Portsmouth, Virginia 23704–5004, between 8 a.m. and 4:30 p.m., Monday through Friday, except Federal holidays. The telephone number is (757) 398–6222.

FOR FURTHER INFORMATION CONTACT: Ann B. Deaton, Bridge Administrator, Fifth Coast Guard District, at (757) 398–6222.

SUPPLEMENTARY INFORMATION:

Regulatory History

On April 10, 1998, the Coast Guard published a Notice of Proposed Rulemaking (NPRM) entitled ''Drawbridge Operation Regulations; Grassy Sound Channel, Middle Township, NJ'' in the **Federal Register** (63 FR 17781). The Coast Guard did not receive any comments on the proposed rulemaking. No public hearing was requested and none was held.

Background and Purpose

The Ocean Drive drawbridge across the Grassy Sound Channel, mile 1.0, in Middle Township is currently required to open on signal year-round. The Cape May County Bridge Commission, through the Cape May County Department of Public Works, requested permission to cease having the bridge attended 24-hours per day year-round. In support of its request, Cape May County asserts that 8 years of drawbridge opening logs (from 1990 through 1997) show that marine vessel traffic significantly decreased at night and during the winter (Oct. 1 through May 14).

Prior to publishing the Notice of Proposed Rulemaking the Coast Guard reviewed the logs (copies of which are included in the docket for this rulemaking) and they appear to support Cape May County's request. According to the January 1990 to June 1997 drawbridge logs, 680 openings occurred, of which 177 were for construction vessels and 503 for private vessels.

Of the 503 private vessel openings, the average for the 8-year period was 0.183 openings per day; only 16 of the 503 openings for private vessels occurred at night between 8 p.m. and 6.a.m. with an average opening rate of 0.005 per night for the 8-year period. Only 74 of the 503 private vessel bridge openings occurred from October 1 to May 14 with an average rate of 0.043 openings per day for the winter, as compared with the higher rate of 0.430 openings per day during the summer (May 15 to September 30). The majority of openings for construction vessels occurred during 1991 and 1992, in the daytime. Due to this circumstance and the infrequency of construction vessel bridge openings from 1990–97, the 177 construction vessel openings are not included in this analysis.

The winter and night bridge opening rates, when compared to summer and daytime averages, indicate that it is advantageous to change the drawbridge operating regulations. Based on this data, the Coast Guard believes that requiring two-hours notice for openings, during these time periods (night and winter) will help to lessen the high cost of continually manning the bridge, but will not overburden marine traffic. Therefore, the Coast Guard is amending 33 CFR 117 by requiring two-hours advance notice for bridge openings from October 1 to May 14, and from 8 p.m. to 6 a.m. each day from May 15 to September 30.

Discussion of Comments and Changes

The Coast Guard received no comments on the proposed rulemaking. Therefore, the final rule is being implemented without change.

Regulatory Evaluation

This final rule is not a significant regulatory action under section 3(f) of Executive Order 12866 and does not require an assessment of potential costs and benefits under section 6(a)(3) of that order. It has been exempted from review by the Office of Management and Budget under that order. It is not significant under the regulatory policies and procedures of the Department of Transportation (DOT) (44 FR 11040; February 26, 1979). The Coast Guard expects the economic impact of this final rule to be so minimal that a full Regulatory Evaluation under paragraph 10e of the regulatory policies and procedures of DOT is unnecessary. The Coast Guard reached this conclusion based on the fact that the final rule will not prevent mariners from transiting the bridge, but merely require them to give two-hours advance notice for openings during the restricted periods.

Small Entities

Under the Regulatory Flexibility Act (5 U.S.C. 601–612), the Coast Guard must consider whether this final rule will have a significant economic impact on a substantial number of small entities. ''Small entities'' include independently owned and operated small businesses that are not dominant in their field and that otherwise qualify as ''small business concerns'' under section 3 of the Small Business Act (15 U.S.C. 632). Because it expects the impact of this final rule to be minimal, the Coast Guard certifies under 5 U.S.C. 605(b) that this final rule will not have a significant economic impact on a substantial number of small entities.

Collection of Information

This final rule contains no collection of information requirement under the Paperwork Reduction Act of 1995 (44 U.S.C. 3501–3520).

Federalism

The Coast Guard has analyzed this final rule under the principles and criteria contained in Executive Order 12612, and has determined that this final rule does not have sufficient federalism implications to warrant the preparation of a Federalism Assessment.

Environment

The Coast Guard considered the environmental impact of this final rule and concluded that under figure 2–1, paragraph (32)(e) of COMDTINST M16475.1C, this final rule is categorically excluded from further environmental documentation based on the fact that it is a promulgation of the operating regulations for a drawbridge. A Categorical Exclusion Determination statement has been prepared and placed in the rulemaking docket.

List of Subjects in 33 CFR Part 117

Bridges.

Regulations

For the reasons discussed in the preamble, the Coast Guard amends 33 CFR 117 as follows:

PART 117—DRAWBRIDGE OPERATION REGULATIONS

1. The authority citation for Part 117 continues to read as follows:

Authority: 33 U.S.C. 499; 49 CFR 1.46; 33 CFR 1.05–1(g); Section 117.255 also issued under the authority of Pub. L. 102–587, 106 Stat. 5039.

2. A new § 117.721 is added to read as follows:

§ 117.721 Grassy Sound Channel.

The draw of the Grassy Sound Channel Bridge, mile 1.0, in Middle Township, will open on signal from 6 a.m. to 8 p.m. from May 15 through

September 30; two-hours advance notice is required for all other openings by phoning (609) 368–4591.

Dated: August 5, 1998.

T.B. Doherty,

Captain, U.S. Coast Guard, Acting Commander, Fifth Coast Guard District.

[FR Doc. 98–21799 Filed 8–12–98; 8:45 am]

BILLING CODE 4910–15–M

DEPARTMENT OF COMMERCE

National Oceanic and Atmospheric Administration

50 CFR Part 660

[Docket No. 971229312–7312–01; I.D. 121697C]

Fisheries off West Coast States and in the Western Pacific; Pacific Coast Groundfish Fishery; Correction

AGENCY: National Marine Fisheries Service (NMFS), National Oceanic and Atmospheric Administration (NOAA), Commerce.

ACTION: Correction to the 1998 specifications for the Pacific Coast groundfish fishery.

SUMMARY: This document contains a correction to the 1998 groundfish fishery specifications and management measures for the Pacific Coast groundfish fishery, which were published in the **Federal Register** on January 6, 1998.

DATES: Effective August 13, 1998.

FOR FURTHER INFORMATION CONTACT: Kate King, NMFS, 206–526–6145.

SUPPLEMENTARY INFORMATION:

Background

The 1998 fishery specifications and management measures for groundfish taken in the U.S. exclusive economic zone and state waters off the coasts of Washington, Oregon, and California, as authorized by the Pacific Coast Groundfish Fishery Management Plan, were published in the **Federal Register** on January 6, 1998. The specifications contained an incorrect area for the primary seasons for the shore-based sector of the whiting fishery.

Correction of Publication

The rule/document published on January 6, 1998 (63 FR 419), FR Doc. 97–34234, is corrected as follows:

On page 440, in the second column, in the tenth complete paragraph on the third line, the parenthetical phrase ''(the Eureka area)'' is removed.

Dated: August 6, 1998.

Rolland A. Schmitten,

Assistant Administrator for Fisheries, National Marine Fisheries Service.

[FR Doc. 98–21644 Filed 8–12–98; 8:45 am]

BILLING CODE 3510–22–F

Proposed Rules

Federal Register
Vol. 63, No. 156
Thursday, August 13, 1998

This section of the FEDERAL REGISTER contains notices to the public of the proposed issuance of rules and regulations. The purpose of these notices is to give interested persons an opportunity to participate in the rule making prior to the adoption of the final rules.

OFFICE OF PERSONNEL MANAGEMENT

5 CFR Part 630

RIN 3206–AI35

Family and Medical Leave

AGENCY: Office of Personnel Management.

ACTION: Proposed rule with request for comments.

SUMMARY: The Office of Personnel Management is issuing proposed regulations on the Family and Medical Leave Act of 1993 to ensure that both employees' and agencies' rights are protected and their responsibilities fulfilled.

DATES: Comments must be received on or before October 13, 1998.

ADDRESSES: Comments may be sent or delivered to Donald J. Winstead, Assistant Director for Compensation Administration, Office of Personnel Management, Room 7H31, 1900 E Street NW., Washington, DC 20415; FAX (202) 606–0824; or email to payleave@opm.gov.

FOR FURTHER INFORMATION CONTACT: Jo Ann Perrini, (202) 606–2858, FAX (202) 606–0824, or email to payleave@opm.gov.

SUPPLEMENTARY INFORMATION: On December 5, 1996, the Office of Personnel Management (OPM) published final regulations (61 FR 64441) to implement the requirements set forth in sections 6381 through 6387 of title 5, United States Code, as added by Title II of the Family and Medical Leave Act of 1993 (FMLA) (Public Law 103–3, February 5, 1993). The final regulations became effective on January 6, 1997. The FMLA provides eligible Federal employees with a total of 12 administrative workweeks of unpaid leave during any 12-month period for (a) the birth of a son or daughter and care of the newborn; (b) the placement of a child with the employee for adoption or foster care; (c) the care of the employee's spouse, son, daughter, or parent with a serious health condition; or (d) a serious health condition of the employee that makes the employee unable to perform the essential functions of his or her position. OPM's regulations implementing the FMLA are found in subpart L of part 630 of title 5, Code of Federal Regulations.

Questions and concerns continue to be received by OPM on an employee's obligation to notify the agency of his or her intent to use family and medical leave and provide required medical certification of the serious health condition. We are issuing these proposed regulations to ensure that both employees and agencies are complying with the requirements of the Act.

We believe it is Congress' intent to provide Federal employees with an entitlement to FMLA leave in a fair and equitable manner while minimizing the impact of such leave on an employing agency. Although individual situations may require some flexibility in meeting the notification and medical certification requirements of the Act, employees remain responsible for meeting their obligations under the FMLA.

Invoking Entitlement to Family and Medical Leave

There is a major difference between Title I and Title II of the FMLA in terms of the responsibility of an employer versus an employee to invoke entitlement to FMLA leave. Under section 102(c)(2) of Title I of the FMLA, which covers non-Federal employees, an employee may elect, or an employer may require the employee to substitute paid leave for unpaid leave under the FMLA, except that nothing in that section would require an employer to provide paid sick leave in any situation in which the employing agency would not normally provide sick leave. The Department of Labor's (DOL's) regulations implementing Title I of the FMLA therefore require the employer to designate leave, paid or unpaid, as FMLA leave and to give notice of such designation to the employee. In addition, if an employee does not initially request substitution of paid leave for unpaid leave under the FMLA, DOL's regulations permit the employer to require the employee to substitute appropriate paid leave for unpaid leave.

In contrast, 5 U.S.C. 6382 (as added by section 201 of Title II of the FMLA) states that an employee may elect to substitute any of the employee's accrued or accumulated annual or sick leave for unpaid leave under the FMLA, except that nothing in section 201 would require an agency to provide paid sick leave in any situation in which the employing agency would not normally provide sick leave. OPM's regulations implementing Title II of the FMLA for Federal employees therefore require employees to take responsibility for invoking their entitlement to FMLA leave. In addition, an employee may elect to substitute paid leave, as appropriate, for leave without pay under the FMLA. An agency may not designate leave, paid or unpaid, as FMLA leave unless it has obtained confirmation from an employee of his or her intent to use FMLA leave and the employee chooses to substitute appropriate paid leave for FMLA leave. The requirement that the employee must initiate action to take FMLA leave is consistent with all other Federal leave policies and programs in that the employee is responsible for requesting leave or other time off from work. The 12 workweeks of unpaid leave under the FMLA are in addition to any annual leave, sick leave, or other leave or compensatory time off available to an employee, and an employee may choose to take FMLA leave in combination with any other available leave.

In most cases, an employee must provide the employing agency with not less than 30 days notice of his or her intention to take FMLA leave. An employee is responsible for giving adequate notice of his or her intent to use FMLA leave so that agencies may (1) determine that the employee's need for leave is consistent with the purposes for which FMLA leave may be used and (2) provide guidance concerning an employee's rights and obligations under the FMLA. If an employee seeks to invoke his or her entitlement to FMLA leave retroactively, an agency may be severely hampered in fulfilling its statutory responsibilities for administering the FMLA. Therefore, we propose to add a sentence to § 630.1203(b) to state that an employee may not retroactively invoke his or her entitlement to leave under the FMLA.

Additional Evidence

Agencies have asked whether they may request additional evidence to support a claim that an employee used

FMLA leave to care for a spouse, son, daughter, or parent. For example, an agency may wish to request that an employee obtain and provide to the agency his or her child's school attendance records coinciding with the period during which the employee used FMLA leave. Currently, OPM's regulations in § 630.1206(f) permit agencies to require that a request for FMLA leave for birth or adoption or foster care be supported by evidence that is administratively acceptable to the agency. We believe the law permits an agency to establish a policy that requires an employee to submit administratively acceptable evidence that would support the use of FMLA leave for any of the cited purposes. Therefore, we propose to revise § 630.1206(f) to permit agencies to require that a request for FMLA leave be supported by evidence that is administratively acceptable to the agency. Such a policy must be nondiscriminatory and made known to all employees.

Medical Certification

In its final regulations, OPM did not establish a time limit for submitting the medical certification of a serious health condition. However, after careful reconsideration, we believe a Governmentwide time limit for submitting medical certification for FMLA leave is necessary to ensure that the entitlements provided under the FMLA are provided to all Federal employees in a fair and consistent manner. Therefore, we propose to revise § 630.1207(a) to ensure that employees are given at least 15 workdays in which to provide written medical certification of a serious health condition. In addition, § 630.1207(d) and (e) would be revised to give employees 15 workdays in which to submit a second or third written medical certification.

If an employee is unable to provide the requested medical certification before FMLA leave begins, or if the agency requires a second opinion under § 630.1207(d) and the medical treatment requires the leave to begin, the agency must grant provisional leave pending final written certification that must be received by the agency no later than 15 workdays after the date the FMLA leave began. We believe it is Congress' intent that in all circumstances, employees be required to provide complete medical certification, when requested by an agency, within a reasonable period based on the circumstances involved.

Insufficient Notification and Medical Certification

The law and regulations require employees to provide notification and medical certification (if requested by the agency) for FMLA leave. When an employee requests FMLA leave immediately for a medical emergency and either cannot provide medical certification or submits incomplete medical certification, the agency must grant the employee provisional leave under § 630.1207(g). However, if the employee does not comply with the agency's requests for sufficient medical certification, the employee is not entitled to leave under the FMLA. To reinforce this principle, we propose to add paragraph (l) to § 630.1208 to state that an employee who does not comply with the notification requirements in § 630.1206, and who does not provide medical certification that includes all the information required by law and OPM's regulations in § 630.1207(b), is not entitled to FMLA leave. Further, the employee would not receive any of the employment and benefit protections in § 630.1208.

Agencies are reminded that their FMLA notification and medical certification requirements may be less stringent than those contained in an agency's leave restriction policies. However, agencies' policies or procedures for providing notification of FMLA leave or medical certification may not be more stringent than the requirements in §§ 630.1206 and 630.1207(b).

Miscellaneous

We propose to add a sentence to § 630.1203(e) to state that any Federal holidays that occur during the period in which an employee is on FMLA leave will be counted toward the 12-week entitlement to FMLA leave. In addition, § 630.1201(b)(1)(ii)(B) and (b)(3)(i) would be revised as requested by the Department of Veterans Affairs to identify employees of the Veterans Health Administration that are covered by title II of the FMLA.

Regulatory Flexibility Act

I certify that these regulations would not have a significant economic impact on a substantial number of small entities because they would affect only Federal employees and agencies.

List of Subjects in 5 CFR Part 630

Government employees.

Office of Personnel Management.

Janice R. Lachance,

Director.

Accordingly, OPM proposes to amend part 630 of title 5 of the Code of Federal Regulations as follows:

PART 630—ABSENCE AND LEAVE

1. The authority citation for part 630 is revised to read as follows:

Authority: 5 U.S.C. 6311; § 630.301 also issued under Pub. L. 103–356, 108 Stat. 3410; § 630.303 also issued under 5 U.S.C. 6133(a); §§ 630.306 and 630.308 also issued under 5 U.S.C. 6304(d)(3), Pub. L. 102–484, 106 Stat. 2722, and Pub. L. 103–337, 108 Stat. 2663; subpart D also issued under Pub. L. 103–329, 108 Stat. 2423; § 630.501 and subpart F also issued under E.O. 11228, 30 FR 7739, 3 CFR, 1974 Comp., p. 163; subpart G also issued under 5 U.S.C. 6305; subpart H also issued under 5 U.S.C. 6326; subpart I also issued under 5 U.S.C. 6332, Pub. L. 100–566, 102 Stat. 2834, and Pub. L. 103–103, 107 Stat. 1022; subpart J also issued under 5 U.S.C. 6362, Pub. L. 100–566, and Pub. L. 103–103; subpart K also issued under Pub. L. 102–25, 105 Stat. 92; subpart L also issued under 5 U.S.C. 6387 and Pub. L. 103–3, 107 Stat. 23; and subpart M also issued under 5 U.S.C. 6391 and Pub. L. 105–18, 111 Stat. 158.

Subpart L—Family and Medical Leave

2. Section 630.1201(b)(1)(ii)(B) and (b)(3)(i) are revised to read as follows:

§ 630.1201 Purpose, applicability, and administration.

* * * * *

(b) * * *

(1) * * *

(ii) * * *

(B) An employee of the Veterans Health Administration appointed under title 38, United States Code, in occupations listed in 38 U.S.C. 7401(1);

* * * * *

(3) * * *

(i) An employee of the Veterans Health Administration appointed under title 38, United States Code, in occupations listed in 38 U.S.C. 7401(1) shall be governed by the terms and conditions of regulations prescribed by the Secretary of Veterans Affairs;

* * * * *

3. In § 630.1203, a sentence is added at the end of paragraph (b) and a sentence is added at the end of paragraph (e) to read as follows:

§ 630.1203 Leave entitlement.

* * * * *

(b) * * * An employee may not retroactively invoke his or her entitlement to family and medical leave.

* * * * *

(e) * * * Any holidays authorized under 5 U.S.C. 6103 or by Executive order that occur during the period in which the employee is on family and medical leave shall be counted toward the 12-week entitlement to family and medical leave.

* * * * *

4. In § 630.1206, paragraph (f) is revised to read as follows:

§ 630.1206 Notice of leave.

* * * * *

(f) An agency may require that a request for leave under § 630.1203(a) be supported by evidence that is administratively acceptable to the agency.

5. In § 630.1207, the second sentence in paragraph (a) is revised and a sentence is added at the end of paragraphs (d), (e), and (g) to read as follows:

§ 630.1207 Medical certification.

(a) * * * Except as provided in paragraph (g) of this section, an employee shall provide the written medical certification signed by the health care provider no later than 15 workdays after the date the agency requests such medical certification. * * *

* * * * *

(d) * * * Except as provided in paragraph (g) of this section, an employee shall provide the second written medical certification signed by the health care provider no later than 15 workdays after the date the agency requests such medical certification.

(e) * * * Except as provided in paragraph (g) of this section, an employee shall provide the third written medical certification signed by the health care provider no later than 15 workdays after the date the agency requests such medical certification.

* * * * *

(g) * * * The medical certification signed by the health care provider must be received by the agency no later than 15 workdays after the date the family and medical leave began.

* * * * *

6. In § 630.1208, paragraph (l) is added to read as follows:

§ 630.1208 Protection of employment and benefits.

* * * * *

(l) An employee who does not comply with the notification requirements in § 630.1206 and does not provide medical certification signed by the health care provider that includes all of the information required in § 630.1207(b) is not entitled to family and medical leave.

[FR Doc. 98–21741 Filed 8–12–98; 8:45 am]

BILLING CODE 6325–01–P

DEPARTMENT OF THE TREASURY

Office of Thrift Supervision

12 CFR Part 555

[No. 98–77]

RIN 1550–AB00

Electronic Operations

AGENCY: Office of Thrift Supervision, Treasury.

ACTION: Supplemental notice of proposed rulemaking.

SUMMARY: On October 3, 1997, the Office of Thrift Supervision (OTS) published a notice of proposed rulemaking (NPR) to streamline and update its electronic operations regulations. Today's supplemental notice of proposed rulemaking (Supplemental NPR) seeks comment on additional proposed rules that would require each savings association to notify OTS before it establishes a transactional web site. Savings associations that present supervisory or compliance concerns may be subject to additional procedural requirements.

DATES: Comments must be received on or before September 14, 1998.

ADDRESSES: Send comments to Manager, Dissemination Branch, Records Management and Information Policy, Office of Thrift Supervision, 1700 G Street, NW., Washington DC 20552; Attention Docket No. 98–77. These submissions may be hand-delivered to 1700 G Street, NW., from 9:00 a.m. to 5:00 p.m. on business days; they may be sent by facsimile transmission to FAX Number (202) 906–7555 or by e-mail public.info@ots.treas.gov. Those commenting by e-mail should include their name and telephone number. Comments will be available for inspection at 1700 G Street, NW., from 9:00 a.m. until 4:00 p.m. on business days.

FOR FURTHER INFORMATION CONTACT: Richard Bennett, Counsel (Banking and Finance), (202) 906–7409; Karen A. Osterloh, Assistant Chief Counsel, (202) 906–6639; Paul D. Glenn, Special Counsel, Chief Counsel's Office, (202) 906–6203; Paul J. Robin, Program Analyst, Compliance Policy, (202) 906–6648; or Paul R. Reymann, Policy Analyst, Supervision Policy, (202) 906–5645, Office of Thrift Supervision, 1700 G Street NW., Washington, DC 20552.

SUPPLEMENTARY INFORMATION:

I. Background

On October 3, 1997, OTS published a notice of proposed rulemaking (NPR) to streamline and update its regulations relating to electronic operations.[1] The NPR followed an April 2, 1997 advance notice of proposed rulemaking (ANPR) seeking comment on all aspects of banking affected by electronic operations.[2]

The ANPR was designed to elicit information to enhance OTS's understanding of new electronic banking technologies and the impact of these technologies on the regulation of Federal savings associations.[3] The ANPR asked a series of questions concerning the types of restrictions or requirements OTS should impose on electronic operations, including Internet banking.[4]

Based on the information obtained through the ANPR, the NPR proposed to amend OTS's electronic operations regulations to address advances in technology and to permit prudent innovation through the use of emerging technology by Federal savings associations. The NPR noted that OTS would continue to gain additional experience with electronic technology and might issue more specific guidance regulating particular elements of electronic operations.[5]

The comment period on the NPR closed on December 2, 1997. OTS received nine comment letters on the NPR from five Federal savings associations, two trade associations, and two technology firms. One commenter argued that OTS should establish a procedure to review and approve new products or services, in order to protect the safety and soundness of the industry. Another commenter urged OTS not to require a Federal savings association to obtain the OTS's prior approval before adopting new technologies ''unless absolutely necessary to ensure industry-wide safety and soundness.''

After considering these comments and reflecting on its supervisory experience and knowledge, OTS believes that safety and soundness and compliance considerations currently warrant the agency receiving advance notice of industry use of one developing technology—transactional web sites. Such web sites allow savings association customers to use the Internet to conduct a wide variety of financial transactions. They may, however, also pose particular security, compliance, and privacy risks, as discussed more fully in Part II.A., below. The notice requirement will enable OTS to better

[1] 62 FR 51817 (October 3, 1997).
[2] 62 FR 15626 (April 2, 1997).
[3] *See* 62 FR at 15631 and 15633.
[4] *See* 62 FR at 15633.
[5] 62 FR at 51820.

assist regulated institutions to deal with these risks. The same considerations require that the Regional Offices have discretion to impose additional requirements in appropriate circumstances.

Because the safety and soundness and compliance considerations are similar for state-chartered and federally-chartered institutions, this Supplemental NPR proposes to require every savings association to notify OTS before it establishes a transactional web site and comply with additional requirements that the Regional Offices may impose in appropriate circumstances. Since the ANPR and NPR did not specifically discuss these requirements and the ANPR and NPR applied only to Federal savings associations, OTS has concluded that additional public comment would assist in the promulgation of a final rule.

This Supplemental NPR supplements, rather than supersedes the NPR. OTS intends to promulgate one final rule implementing the NPR and the Supplemental NPR. However, rather than codifying the final rule in part 545 as OTS had proposed, OTS is proposing to codify the final rule in a new part 555. The reason is that part 545 only applies to Federal savings associations while the new requirements proposed would apply to all savings associations. When OTS publishes the final rule, it intends to take the provisions designated as subpart B to part 545 in the NPR and redesignate them, in final form, as subpart A to the new part 555 proposed today. As explained in proposed § 555.100, subpart A to part 555 would apply only to Federal savings associations, whereas subpart B to part 555 would apply to all savings associations.

II. Supplemental Proposed Provisions

A. Must I Inform OTS Before I Use Electronic Means or Facilities? (Proposed § 555.300)

Proposed § 555.300(a) sets forth the general rule that a savings association does not have to inform OTS in advance when it plans to use electronic means and facilities except under two circumstances. OTS encourages a savings association to consult with the appropriate Regional Office before it begins activities using electronic means or facilities, even where not required to inform OTS in advance. As with other activities, OTS will continue to rely on its existing supervisory examinations and application processes to ensure the savings association's ability to engage in new activities in a safe, sound, secure, and compliant manner.[6]

The proposed rule contains two exceptions to this general rule. First, proposed § 555.300(b) would require every savings association to notify OTS before it establishes a transactional web site. OTS proposes to define a ''transactional web site'' for purposes of this rule as an Internet site that enables users to conduct financial transactions such as accessing an account, obtaining an account balance, transferring funds, processing bill payments, opening an account, applying for or obtaining a loan, or purchasing other products or services.

OTS believes that using a web site to conduct such activities raises safety and soundness and compliance concerns not present when the activities are conducted through more established technologies. OTS has been, and continues to be, concerned with the adequacy of firewalls to prevent hackers from breaking into an association's computer systems and thereby jeopardizing the association's security.[7] However, OTS is also concerned about other operational and compliance risks presented by Internet banking and intends to increase its monitoring of web sites for compliance with disclosure laws and regulations. Additionally, OTS is concerned about protecting the privacy of individuals submitting information (or about whom information has been submitted).[8] The collection of baseline information on transactional web sites is an important and integral part of OTS efforts to enhance its supervision of Internet banking activities.

While collecting this information will impose a minimal burden on savings associations, it will also allow individual associations, and the industry as a whole, to reap important benefits. OTS will be better able to assist associations that are contemplating or already conducting Internet operations to identify and address the risks that accompanying such activities. This will help institutions avoid problems and protect consumers. The information will also broaden the agency's awareness of trends in Internet banking operations, which it can share with institutions.

At this time, OTS is not proposing to require a notice under § 555.300(b) for any activities using electronic means or facilities other than transactional web sites. For example, a savings association would not be required, under this paragraph, to notify OTS before it establishes an informational web site

[6] OTS reviews the safety and soundness of new activities, the appropriateness of the internal controls and security precautions, and compliance with applicable laws and regulations on a case-by-case and institution-by-institution basis in connection with applications and through the examination process. For institutions subject to an application process (*e.g., de novo* applications), these initial safety and soundness and compliance determinations will be made in the application review. After application approval or where no application is required, safety and soundness and compliance will generally be assessed as a part of the examination process. This process will review and assess the institution's identification of risks of the activity, the steps it has taken to mitigate these risks, the testing it has undertaken to ensure safety and soundness, and its compliance monitoring process.

[7] Statistics from the United States Senate's Permanent Investigations Subcommittee indicate that banking, insurance and securities firms collectively lost more than $800 million in 1996 to computer crimes. This figure is expected to grow as more financial services firms conduct business over the Internet. Susana Schwartz, *Internet Security: The Bane of Electronic Commerce?*, 22 Insurance & Technology 40 (Sept. 1997). A 1996 survey by the Computer Security Institute and the Federal Bureau of Investigations found that of 428 corporations, government agencies, financial institutions, and universities surveyed, 53 percent reported having been victims of computer viruses and 42 percent acknowledged unauthorized use of their computer systems in the prior 12 months. *Id.* In 1995, the FBI estimated that computer criminals cost United States businesses $7.5 billion a year. Losses ranged from outright industrial espionage and willful destruction of files and data to the cost of fixing security problems. David H. Freedman *et al., Cracker,* 122 U.S. News & World Report 56 (June 2, 1997).

[8] OTS has been studying compliance and privacy issues relating to savings association web sites and notes that a number of industry and governmental studies have reported on these issues. For example, two recent industry studies reported a significant number of potential violations of advertising and disclosure requirements on the web sites of banks and other financial service providers, though these studies did not focus on savings associations. The identified problems included failure to: (1) use the term ''annual percentage rate'' or ''APR'' and provide advertising disclosures required by Regulation Z (Truth in Lending Act), (2) include the Equal Housing Lender logotype and legend as required by the Fair Housing Act, (3) post annual percentage yields as required by the Truth In Savings Act, and (4) provide disclaimers that non-insured products are not insured by the Federal Deposit Insurance Corporation as required by FDIC regulations. *See* Richard Insley, *Click Here To Violate the Law* (visited July 30, 1998) <http://www.moneypage.com/features/RegZWebsiteViolations.htm>; Jo Ann S. Barefoot, *Don't Get You Compliance Record Tangled in the Web,* ABA Banking Journal 26–30 (June 1998). Similarly, a recent Federal Trade Commission report included an analysis of 125 web sites operated by financial service providers. It found that while 97 percent of the sites collected personal information, only 17 percent of those sites contained appropriate disclosures such as a privacy policy notice or an information practice statement. *See* Federal Trade Commission, *Privacy Online: A Report to Congress* (June 1998) at 22, 24, 27.

The industry and FTC reports identified only those compliance problems that could be readily observed by viewing the web site. These studies raise serious and legitimate concerns regarding both informational and transactional web sites. Because savings associations could perform a broad range of activities through transactional web sites, OTS believes that transactional web sites are likely to raise other more complex compliance and privacy issues, in addition to those identified in the studies.

(i.e., a non-transactional web site) such as a web site limited to advertising and fee and rate posting.[9] OTS, however, expects savings associations to inform the Regional Office of the informational web site address (the Uniform Resource Locator or ''URL'').[10] This will assist OTS to obtain the information it needs for efficient supervision, particularly in the compliance area.[11] As technologies emerge, OTS may revise the rule to require notice of activities other than establishing a transactional web site. As technologies mature and the industry and OTS gain additional experience, OTS may revise the rule to no longer require notice before establishing a transactional web site.

Second, a filing may also be required in the circumstances described in proposed § 555.300(c). If the OTS Regional Office has informed a savings association of supervisory or compliance concerns that may affect the savings association's use of electronic means or facilities, the savings association must follow any additional procedures the Regional Office has imposed in writing.

B. How Do I Notify OTS? (Proposed § 555.310)

Proposed § 555.310 describes the notice procedures applicable to notices required by § 555.300(b). Because establishing a transactional web site is the only activity that would require such a notice, the notice procedures have been tailored to that activity.

Proposed § 555.310(a) would require a savings association to provide a written notice to the appropriate Regional Office at least 30 days before establishing a transactional web site. OTS does not propose to prescribe any particular form for the notice, but contemplates that it may be brief. The proposed regulation would simply require that a savings association describe the transactional web site, indicate the date the transactional web site will become operational, and list a contact familiar with the deployment, operation, and security of the transactional web site. Upon receipt of the notice, the Regional Office may determine that additional information is required to ensure that the savings association will operate the transactional web site in a safe, sound, secure, and compliant manner.

A typical notification might include the following text:
[*Name of savings association*] plans to establish a transactional web site on the Internet at [*URL*]. It will be operational on [*Date*]. The site will contain mortgage loan applications that can be transmitted securely to our loan processing office. For further information contact: [*Name* at *telephone number, e-mail*].

This notification requirement would further the approach in the ANPR and NPR by facilitating OTS's ability to obtain information on the industry's use of transactional web sites. It would also efficiently allow OTS to keep abreast of significant changes in the way particular savings associations interact with their existing or potential customers to enable OTS to issue appropriate guidance. Finally, it would respond to the concern raised by the comments on the NPR that OTS should be vigilant about new electronic operations raising safety and soundness concerns, by assisting OTS to supervise effectively the electronic operations of savings associations.

Proposed § 555.310(b) contains a transition provision applicable to the notice requirement in § 555.310(a). It provides that if a savings association established a transactional web site after the date of its last regular onsite OTS safety and soundness examination but before the effective date of the final rule, it would have to file a notice describing its activity within 30 days from the effective date of the final rule. OTS notes that if a savings association began the activity before its last regular onsite OTS safety and soundness examination, § 555.310 would not apply to that activity.

III. Request for Comments

OTS invites comments on all aspects of this Supplemental NPR, but requests that commenters limit their comments to new matters raised by this Supplemental NPR, rather than matters addressed in the NPR. OTS solicits specific comment on the following questions:

1. Should OTS require a notice before an association establishes a transactional web site? Why or why not?

2. Is OTS's proposed definition of a ''transactional web site'' appropriate? Are there alternative terms or definitions that are commonly used and understood in the industry that should be substituted? Is the difference between a transactional web site and an informational web site clear and appropriate?

3. Should OTS require a notice for any other activities such as establishing any type of web site on an in-house server, providing e-mail access for the public, or collecting personal information through an interactive web site tool such as a mortgage calculator?

4. What information should be required in the notice filed with OTS? Should OTS require the savings association to provide additional information such as: (a) how it will conduct an activity, including descriptions of security and internal controls (e.g., the encryption level used, the testing that has been performed), or (b) how it will ensure compliance with laws and regulations (e.g., disclosure requirements)?

5. Is it appropriate for OTS to require the notification 30 days before a savings association begins an activity?

IV. Executive Order 12866

The Director of OTS has determined that this proposed rule does not constitute a ''significant regulatory action'' for the purposes of Executive Order 12866.

V. Paperwork Reduction Act of 1995

OTS invites comment on:

Whether the proposed information collection contained in this proposal is necessary for the proper performance of OTS's functions, including whether the information has practical utility;

(1) The accuracy of OTS's estimate of the burden of the proposed information collection;

(2) Ways to enhance the quality, utility, and clarity of the information to be collected;

(3) Ways to minimize the burden of the information collection on respondents, including through the use of automated collection techniques or other forms of information technology; and

(4) Estimates of capital and start-up costs of operation, maintenance and purchases of services to provide information.

Respondents are not required to respond to this collection of information unless it displays a currently valid OMB control number.

The collection of information requirements contained in this proposal have been submitted to the Office of Management and Budget for review in accordance with the Paperwork Reduction Act of 1995 (44 U.S.C.

[9] Of course, before a savings association could change an informational web site to a transactional web site by adding features enabling users to conduct financial transactions on the web site, the savings association would have to file a notice with OTS.

[10] OTS is currently considering whether to require this information as part of the Thrift Financial Report reporting process.

[11] OTS is aware that the advertising and disclosure problems identified by the industry studies cited in footnote 8 above apply equally to transactional and informational web sites. OTS believes, however, that the need for advance notice is greater where such concerns are combined with the other compliance, security, and privacy issues applicable to transactional web sites. To minimize regulatory burden, OTS is proposing to limit the advance notice requirement to transactional web sites. However, OTS will continue to examine both types of web sites for operational and compliance problems.

3507(d)). Comments on the collections of information should be sent to the Office of Management and Budget, Paperwork Reduction Project (1550), Washington, DC 20503, with copies to the Regulations and Legislation Division, Chief Counsel's Office, Office of Thrift Supervision, 1700 G Street, NW., Washington, DC 20552.

The collection of information requirements in this proposed rule are found in 12 CFR 555.300 and 555.310. OTS requires this information for the proper supervision of electronic operations by savings associations. The likely respondents/recordkeepers are savings associations.

Estimated average annual burden hours per respondent: 2 hours.

Estimated number of respondents: 100 respondents.

Estimated total annual reporting burden: 200 hours.

Start up costs to respondents: None.

VI. Regulatory Flexibility Act Analysis

Pursuant to section 605(b) of the Regulatory Flexibility Act, OTS certifies that this proposed rule will not have a significant impact on a substantial number of small entities. In conjunction with the NPR, this Supplemental NPR should make it easier for savings associations, including small institutions, to engage in electronic operations. While it imposes a notice requirement on savings associations using one particular type of electronic means or facility (i.e., a transactional web site) and allows Regional Office to impose case-by-case restrictions for supervisory or compliance reasons, these requirements are the minimum necessary for proper supervision, and should not have a significant impact on a substantial number of small institutions.

VII. Unfunded Mandates Act of 1995

Section 202 of the Unfunded Mandates Reform Act of 1995, Pub. L. 104–4 (Unfunded Mandates Act), requires that an agency prepare a budgetary impact statement before promulgating a rule that includes a Federal mandate that may result in expenditure by state, local, and tribal governments, in the aggregate, or by the private sector, of $100 million or more in any one year. If a budgetary impact statement is required, section 205 of the Unfunded Mandates Act also requires an agency to identify and consider a reasonable number of regulatory alternatives before promulgating a rule. OTS has determined that the proposed rule will not result in expenditures by state, local, or tribal governments or by the private sector of $100 million or more. Accordingly, this rulemaking is not subject to section 202 of the Unfunded Mandates Act.

List of Subjects 12 CFR Part 555

Accounting, Consumer protection, Credit, Electronic funds transfers, Investments, Reporting and recordkeeping requirements, Savings associations.

Accordingly, the Office of Thrift Supervision proposes to amend chapter V, title 12 of the Code of Federal Regulations by adding part 555 as set forth below:

PART 555—ELECTRONIC OPERATIONS

Sec.
555.100 What does this part do?

Subpart A—Authority of Federal Savings Associations To Conduct Electronic Operations [Reserved]

Subpart B—Requirements Applicable to All Savings Associations

555.300 Must I inform OTS before I use electronic means or facilities?
555.310 How do I notify OTS?

Authority: 12 U.S.C. 1462a, 1463, 1464.

§ 555.100 What does this part do?

Subpart A of this part describes how a Federal savings association may provide products and services through electronic means and facilities. Subpart B of this part contains requirements applicable to all savings associations.

Subpart A—Authority of Federal Savings Associations to Conduct Electronic Operations [Reserved]

Subpart B—Requirements Applicable to All Savings Associations

§ 555.300 Must I inform OTS before I use electronic means or facilities?

(a) *General.* A savings association (''you'') are not required to inform OTS before you use electronic means or facilities, except as provided in paragraphs (b) and (c) of this section. OTS encourages you to consult with your Regional Office before you engage in activities using electronic means or facilities in circumstances not covered by paragraphs (b) or (c) of this section.

(b) *Activities requiring advance notice.* You must file a written notice as described in § 555.310 before you establish a transactional web site. A transactional web site is an Internet site that enables users to conduct financial transactions such as accessing an account, obtaining an account balance, transferring funds, processing bill payments, opening an account, applying for or obtaining a loan, or purchasing other products or services.

(c) *Other procedures.* If the OTS Regional Office has informed you of any supervisory or compliance concerns that may affect your use of electronic means or facilities, you must follow any procedures it has imposed in writing.

§ 555.310 How do I notify OTS?

(a) *Notice requirement.* You must file a written notice with the appropriate Regional Office at least 30 days before you establish a transactional web site. The notice must do three things:

(1) Describe the transactional web site.

(2) Indicate the date the transactional web site will become operational.

(3) List a contact familiar with the deployment, operation, and security of the transactional web site.

(b) *Transition provision.* If you established a transactional web site after the date of your last regular onsite OTS safety and soundness examination but before [*Effective date of final rule*], you must file a notice describing your activity by [*30 days after effective date of final rule*].

Dated: August 7, 1998.

By the Office of Thrift Supervision.

Ellen Seidman,

Director.

[FR Doc. 98–21704 Filed 8–12–98; 8:45 am]

BILLING CODE 6720–01–P

SMALL BUSINESS ADMINISTRATION

13 CFR Part 120

Business Loan Program

AGENCY: Small Business Administration (SBA).

ACTION: Notice of intent to reopen comment period for 7(a) lenders.

SUMMARY: On May 5, 1998, in 63 FR 24753, SBA published a proposed rule implementing Pub. L. 104–208 and Pub. L. 105–135 with respect to SBA financing in the 504 program, and clarifying existing regulations. The comment period ended on July 6, 1998. This notice reopens the comment period for 30 days to allow 7(a) lenders to comment on the proposed rule's change to 13 CFR § 120.111 on Eligible Passive Companies. The SBA is not reopening or extending the comment period of the proposed rule for other issues or parties.

DATES: This notice reopens the comment period as of August 13, 1998. Comments on the proposed regulation published on May 5, 1998, in 63 FR 24753, must be submitted on or before September 14, 1998.

ADDRESSES: Comments on the proposed regulation published on May 5, 1998, in 63 FR 24753, should be mailed to Jane Palsgrove Butler, Acting Associate Administrator for Financial Assistance, Small Business Administration, 409 Third Street, S.W., Washington, D.C. 20416.

FOR FURTHER INFORMATION CONTACT: Michael J. Dowd, 202–205–6660.

SUPPLEMENTARY INFORMATION: On May 5, 1998, in 63 FR 24753, SBA published a proposed rule implementing Pub. L. 104–208 and Pub. L. 105–135 with respect to SBA financing in the 504 program, and clarifying existing regulations. The comment period ended on July 6, 1998.

The preamble to the proposed rule indicated that the rule applied primarily to the 504 program. However, the proposed rule also amended 13 CFR § 120.111 to allow an Eligible Passive Company to lease property to multiple unrelated operating companies. This section applies not only to participants in the 504 program, but also to participants in the 7(a) program.

SBA now requests lenders participating in the 7(a) program to comment on the proposed rule's change to 13 CFR § 120.111. For that reason, SBA is reopening the comment period for 30 days to accommodate the comments of 7(a) lenders. The SBA is not reopening or extending the comment period of the proposed rule for other issues or parties not identified above. It is unnecessary to resubmit comments previously submitted regarding the proposed rule.

Dated: August 6, 1998.

Jane Palsgrove Butler,

Associate Administrator for Financial Assistance (A).

[FR Doc. 98–21781 Filed 8–12–98; 8:45 am]

BILLING CODE 8025–01–P

DEPARTMENT OF TRANSPORTATION

Federal Aviation Administration

14 CFR Part 39

[Docket No. 98–NM–214–AD]

RIN 2120–AA64

Airworthiness Directives; British Aerospace Model BAe 146–100A, –200A, and –300A Series Airplanes

AGENCY: Federal Aviation Administration, DOT.

ACTION: Notice of proposed rulemaking (NPRM).

SUMMARY: This document proposes the adoption of a new airworthiness directive (AD) that is applicable to certain British Aerospace Model BAe 146–100A, –200A, and –300A series airplanes. This proposal would require either a one-time non-destructive test (NDT) or a visual inspection for cracking of the fuselage skin in the vicinity of frame 29 between stringers 12 and 13, and repair, if necessary. This proposal is prompted by issuance of mandatory continuing airworthiness information by a foreign civil airworthiness authority. The actions specified by the proposed AD are intended to detect and correct fatigue cracking of the fuselage skin in the specified area, which could result in reduced structural integrity of the airplane.

DATES: Comments must be received by September 14, 1998.

ADDRESSES: Submit comments in triplicate to the Federal Aviation Administration (FAA), Transport Airplane Directorate, ANM–114, Attention: Rules Docket No. 98–NM–214–AD, 1601 Lind Avenue, SW., Renton, Washington 98055–4056. Comments may be inspected at this location between 9:00 a.m. and 3:00 p.m., Monday through Friday, except Federal holidays.

The service information referenced in the proposed rule may be obtained from AI(R) American Support, Inc., 13850 Mclearen Road, Herndon, Virginia 20171. This information may be examined at the FAA, Transport Airplane Directorate, 1601 Lind Avenue, SW., Renton, Washington.

FOR FURTHER INFORMATION CONTACT: Norman B. Martenson, Manager, International Branch, ANM–116, FAA, Transport Airplane Directorate, 1601 Lind Avenue, SW., Renton, Washington 98055–4056; telephone (425) 227–2110; fax (425) 227–1149.

SUPPLEMENTARY INFORMATION:

Comments Invited

Interested persons are invited to participate in the making of the proposed rule by submitting such written data, views, or arguments as they may desire. Communications shall identify the Rules Docket number and be submitted in triplicate to the address specified above. All communications received on or before the closing date for comments, specified above, will be considered before taking action on the proposed rule. The proposals contained in this notice may be changed in light of the comments received.

Comments are specifically invited on the overall regulatory, economic, environmental, and energy aspects of the proposed rule. All comments submitted will be available, both before and after the closing date for comments, in the Rules Docket for examination by interested persons. A report summarizing each FAA-public contact concerned with the substance of this proposal will be filed in the Rules Docket.

Commenters wishing the FAA to acknowledge receipt of their comments submitted in response to this notice must submit a self-addressed, stamped postcard on which the following statement is made: ''Comments to Docket Number 98–NM–214–AD.'' The postcard will be date stamped and returned to the commenter.

Availability of NPRMs

Any person may obtain a copy of this NPRM by submitting a request to the FAA, Transport Airplane Directorate, ANM–114, Attention: Rules Docket No. 98–NM–214–AD, 1601 Lind Avenue, SW., Renton, Washington 98055–4056.

Discussion

The Civil Aviation Authority (CAA), which is the airworthiness authority for the United Kingdom, notified the FAA that an unsafe condition may exist on certain British Aerospace Model BAe 146–100A, –200A, and –300A series airplanes. The CAA advises that it has received reports that, during routine inspections, fatigue cracking was found in the vicinity of frame 29 between stringers 12 and 13 of the fuselage skin. The exact cause of the cracking in this area has not yet been determined. Such fatigue cracking, if not corrected, could result in reduced structural integrity of the airplane.

Explanation of Relevant Service Information

The manufacturer has issued British Aerospace Service Bulletin SB.53–144, dated April 27, 1998, which describes procedures for performing either a one-time non-destructive test (NDT) or a visual inspection for cracking of the fuselage skin in the vicinity of frame 29 between stringers 12 and 13, and repair, if necessary. The CAA classified this service bulletin as mandatory and issued British airworthiness directive 005–04–98 in order to assure the continued airworthiness of these airplanes in the United Kingdom.

FAA's Conclusions

This airplane model is manufactured in the United Kingdom and is type certificated for operation in the United States under the provisions of section 21.29 of the Federal Aviation Regulations (14 CFR 21.29) and the applicable bilateral airworthiness

agreement. Pursuant to this bilateral airworthiness agreement, the CAA has kept the FAA informed of the situation described above. The FAA has examined the findings of the CAA, reviewed all available information, and determined that AD action is necessary for products of this type design that are certificated for operation in the United States.

Explanation of Requirements of Proposed Rule

Since an unsafe condition has been identified that is likely to exist or develop on other airplanes of the same type design registered in the United States, the proposed AD would require accomplishment of the actions specified in the service bulletin described previously, except as discussed below.

Interim Action

This is considered to be interim action until final action is identified, at which time the FAA may consider further rulemaking.

Differences Between Proposed Rule and Service Bulletin

Operators should note that, although the service bulletin specifies that the manufacturer may be contacted for disposition of cracking conditions, this proposal would require the repair of those conditions to be accomplished in accordance with a method approved by either the FAA, or the CAA (or its delegated agent). In light of the type of repair that would be required to address the identified unsafe condition, and in consonance with existing bilateral airworthiness agreements, the FAA has determined that, for this proposed AD, a repair approved by either the FAA or the CAA would be acceptable for compliance with this proposed AD.

Operators should further note that the service bulletin recommends accomplishing the inspection prior to reaching a certain threshold, or within a specified grace period, ''whichever occurs earliest.'' However, this proposed AD would specify that the actions would be required to be accomplished at the later of these two times to prevent unnecessary grounding of airplanes.

Cost Impact

The FAA estimates that 23 airplanes of U.S. registry would be affected by this proposed AD.

For operators that elect to accomplish the proposed visual inspection rather than the non-destructive test, it would take approximately 6 work hours per airplane to accomplish it, at an average labor rate of $60 per work hour. Based on these figures, the cost impact of the proposed visual inspection on U.S. operators is estimated to be $360 per airplane.

For operators that elect to accomplish the proposed non-destructive test rather than the visual inspection, it would take approximately 8 work hours per airplane to accomplish it, at an average labor rate of $60 per work hour. Based on these figures, the cost impact of the proposed non-destructive test on U.S. operators is estimated to be $480 per airplane.

The cost impact figures discussed above are based on assumptions that no operator has yet accomplished any of the proposed requirements of this AD action, and that no operator would accomplish those actions in the future if this AD were not adopted.

Regulatory Impact

The regulations proposed herein would not have substantial direct effects on the States, on the relationship between the national government and the States, or on the distribution of power and responsibilities among the various levels of government. Therefore, in accordance with Executive Order 12612, it is determined that this proposal would not have sufficient federalism implications to warrant the preparation of a Federalism Assessment.

For the reasons discussed above, I certify that this proposed regulation (1) is not a ''significant regulatory action'' under Executive Order 12866; (2) is not a ''significant rule'' under the DOT Regulatory Policies and Procedures (44 FR 11034, February 26, 1979); and (3) if promulgated, will not have a significant economic impact, positive or negative, on a substantial number of small entities under the criteria of the Regulatory Flexibility Act. A copy of the draft regulatory evaluation prepared for this action is contained in the Rules Docket. A copy of it may be obtained by contacting the Rules Docket at the location provided under the caption **ADDRESSES.**

List of Subjects in 14 CFR Part 39

Air transportation, Aircraft, Aviation safety, Safety.

The Proposed Amendment

Accordingly, pursuant to the authority delegated to me by the Administrator, the Federal Aviation Administration proposes to amend part 39 of the Federal Aviation Regulations (14 CFR part 39) as follows:

PART 39—AIRWORTHINESS DIRECTIVES

1. The authority citation for part 39 continues to read as follows:

Authority: 49 U.S.C. 106(g), 40113, 44701.

§ 39.13 [Amended]

2. Section 39.13 is amended by adding the following new airworthiness directive:

British Aerospace Regional Aircraft (Formerly British Aerospace Regional Aircraft Limited, Avro International Aerospace Division; British Aerospace, PLC; British Aerospace Commercial Aircraft Limited): Docket 98–NM–214–AD.

Applicability: Model BAe 146–100A, –200A, and –300A series airplanes, as listed in British Aerospace Service Bulletin SB.53–144, dated April 27, 1998; certificated in any category.

Note 1: This AD applies to each airplane identified in the preceding applicability provision, regardless of whether it has been modified, altered, or repaired in the area subject to the requirements of this AD. For airplanes that have been modified, altered, or repaired so that the performance of the requirements of this AD is affected, the owner/operator must request approval for an alternative method of compliance in accordance with paragraph (d) of this AD. The request should include an assessment of the effect of the modification, alteration, or repair on the unsafe condition addressed by this AD; and, if the unsafe condition has not been eliminated, the request should include specific proposed actions to address it.

Compliance: Required as indicated, unless accomplished previously.

To detect and correct fatigue cracking of the fuselage skin in the vicinity of frame 29 between stringers 12 and 13, which could result in reduced structural integrity of the airplane, accomplish the following:

(a) Perform either a one-time non-destructive test (NDT) or a one-time detailed visual inspection for cracking of the fuselage skin in the vicinity of frame 29 between stringers 12 and 13, in accordance with British Aerospace Service Bulletin SB.53–144, dated April 27, 1998, at the time specified in paragraph (a)(1), (a)(2), (a)(3), or (a)(4) of this AD, as appliciable.

(1) For airplanes identified in paragraph 1.D.(1)(a) of the service bulletin: Inspect prior to the accumulation of 12,000 total flight cycles, or within 1,000 flight cycles after the effective date of this AD, whichever occurs later.

(2) For airplanes identified in paragraph 1.D.(1)(b) of the service bulletin: Inspect prior to the accumulation of 16,000 total flight cycles, or within 1,200 flight cycles after the effective date of this AD, whichever occurs later.

(3) For airplanes identified in paragraph 1.D.(1)(c) of the service bulletin: Inspect prior to the accumulation of 13,500 total flight cycles, or within 1,000 flight cycles after the effective date of this AD, whichever occurs later.

(4) For airplanes identified in paragraph 1.D.(1)(d) of the service bulletin: Inspect prior to the accumulation of 22,000 total flight cycles, or within 1,400 flight cycles after the effective date of this AD, whichever occurs later.

(b) If no cracking is detected during the inspection required by paragraph (a) of this AD, no further action is required by this AD.

(c) If any cracking is detected during the inspection required by paragraph (a) of this AD, prior to further flight, repair in accordance with a method approved by either the Manager, International Branch, ANM–116, FAA, Transport Airplane Directorate; or the Civil Aviation Authority (or its delegated agent).

(d) An alternative method of compliance or adjustment of the compliance time that provides an acceptable level of safety may be used if approved by the Manager, International Branch, ANM–116. Operators shall submit their requests through an appropriate FAA Principal Maintenance Inspector, who may add comments and then send it to the Manager, International Branch, ANM–116.

Note 2: Information concerning the existence of approved alternative methods of compliance with this AD, if any, may be obtained from the International Branch, ANM–116.

(e) Special flight permits may be issued in accordance with sections 21.197 and 21.199 of the Federal Aviation Regulations (14 CFR 21.197 and 21.199) to operate the airplane to a location where the requirements of this AD can be accomplished.

Note 3: The subject of this AD is addressed in British airworthiness directive 005–04–98.

Issued in Renton, Washington, on August 6, 1998.

Darrell M. Pederson,

Acting Manager, Transport Airplane Directorate, Aircraft Certification Service.

[FR Doc. 98–21659 Filed 8–12–98 8:45 am]

BILLING CODE 4910–13–U

DEPARTMENT OF TRANSPORTATION

Federal Aviation Administration

14 CFR Part 39

[Docket No. 98–NM–203–AD]

RIN 2120–AA64

Airworthiness Directives; Short Brothers Model SD3–30, SD3–60, SD3–60 SHERPA, and SD3 SHERPA Series Airplanes; Short Brothers Model SD3–30 Series Airplanes

AGENCY: Federal Aviation Administration, DOT.

ACTION: Notice of proposed rulemaking (NPRM).

SUMMARY: This document proposes the adoption of a new airworthiness directive (AD) that is applicable to all SD3–30, SD3–60, SD3–60 SHERPA, and SD3 SHERPA series airplanes. This proposal would require repetitive visual inspections of the flap levers and bracket assembly of the inner flap sub-assembly of the left and right wings to detect certain discrepancies; and corrective actions, if necessary. This proposal is prompted by issuance of mandatory continuing airworthiness information by a foreign civil airworthiness authority. The actions specified by the proposed AD are intended to detect and correct failure of the levers and bracket assembly, which could result in uncommanded retraction of the inner flap assembly and consequent reduced controllability of the airplane.

DATES: Comments must be received by September 14, 1998.

ADDRESSES: Submit comments in triplicate to the Federal Aviation Administration (FAA), Transport Airplane Directorate, ANM–114, Attention: Rules Docket No. 98–NM–203–AD, 1601 Lind Avenue, SW., Renton, Washington 98055–4056. Comments may be inspected at this location between 9:00 a.m. and 3:00 p.m., Monday through Friday, except Federal holidays.

The service information referenced in the proposed rule may be obtained from Short Brothers, Airworthiness & Engineering Quality, P.O. Box 241, Airport Road, Belfast BT3 9DZ, Northern Ireland. This information may be examined at the FAA, Transport Airplane Directorate, 1601 Lind Avenue, SW., Renton, Washington.

FOR FURTHER INFORMATION CONTACT: Norman B. Martenson, Manager, International Branch, ANM–116, FAA, Transport Airplane Directorate, 1601 Lind Avenue, SW., Renton, Washington 98055–4056; telephone (425) 227–2110; fax (425) 227–1149.

SUPPLEMENTARY INFORMATION:

Comments Invited

Interested persons are invited to participate in the making of the proposed rule by submitting such written data, views, or arguments as they may desire. Communications shall identify the Rules Docket number and be submitted in triplicate to the address specified above. All communications received on or before the closing date for comments, specified above, will be considered before taking action on the proposed rule. The proposals contained in this notice may be changed in light of the comments received.

Comments are specifically invited on the overall regulatory, economic, environmental, and energy aspects of the proposed rule. All comments submitted will be available, both before and after the closing date for comments, in the Rules Docket for examination by interested persons. A report summarizing each FAA-public contact concerned with the substance of this proposal will be filed in the Rules Docket.

Commenters wishing the FAA to acknowledge receipt of their comments submitted in response to this notice must submit a self-addressed, stamped postcard on which the following statement is made: ''Comments to Docket Number 98–NM–203–AD.'' The postcard will be date stamped and returned to the commenter.

Availability of NPRMs

Any person may obtain a copy of this NPRM by submitting a request to the FAA, Transport Airplane Directorate, ANM–114, Attention: Rules Docket No. 98–NM–203–AD, 1601 Lind Avenue, SW., Renton, Washington 98055–4056.

Discussion

The Civil Aviation Authority (CAA), which is the airworthiness authority for the United Kingdom, notified the FAA that an unsafe condition may exist on all Short Brothers Model SD3–30, SD3–60, SD3–60 SHERPA, and SD3 SHERPA series airplanes. The CAA advises that, during an inspection, evidence of corrosion, cracking, and protective coating breakdown was detected on the levers and bracket assembly of the inner flap sub-assembly of the left and right wings. Investigation revealed that the discrepancies may have been initiated by incorrect rigging of the flaps. Such discrepancies, if not corrected, could result in failure of the levers and bracket assembly, which could result in uncommanded retraction of the inner flap assembly and consequent reduced controllability of the airplane.

Explanation of Relevant Service Information

Shorts has issued the following service bulletins, all dated January 14, 1997:

- SD360–27–26 (for Model SD3–60 series airplanes);
- SD360 Sherpa 27–1 (for Model SD3–60 SHERPA series airplanes);
- SD3 Sherpa 27–2 (for Model SD3 SHERPA series airplanes); and
- SD3–27–36 (for Model SD3–30 series airplanes).

These service bulletins describe procedures for repetitive visual inspections of the flap levers and bracket assembly of the inner flap sub-assembly of the left and right wings to detect discrepancies (i.e., corrosion, cracking, protective coating breakdown, and inadequate clearances between the forward face of the lower levers and the

bracket web); and corrective actions, if necessary. The corrective actions include renewal of protective coating, removal of corrosion and cracking within acceptable limits, replacement of discrepant parts with new parts, and re-rigging of the inner flap system. Accomplishment of the actions specified in the service bulletins is intended to adequately address the identified unsafe condition. The CAA classified these service bulletins as mandatory and issued British airworthiness directives 008–01–97, 010–01–97, 011–01–97, and 009–01–97 in order to assure the continued airworthiness of these airplanes in the United Kingdom.

FAA's Conclusions

These airplane models are manufactured in the United Kingdom and are type certificated for operation in the United States under the provisions of section 21.29 of the Federal Aviation Regulations (14 CFR 21.29) and the applicable bilateral airworthiness agreement. Pursuant to this bilateral airworthiness agreement, the CAA has kept the FAA informed of the situation described above. The FAA has examined the findings of the CAA, reviewed all available information, and determined that AD action is necessary for products of this type design that are certificated for operation in the United States.

Explanation of Requirements of Proposed Rule

Since an unsafe condition has been identified that is likely to exist or develop on other airplanes of the same type design registered in the United States, the proposed AD would require accomplishment of the actions specified in the service bulletins described previously.

Cost Impact

The FAA estimates that 99 airplanes of U.S. registry would be affected by this proposed AD, that it would take approximately 5 work hours per airplane to accomplish the proposed inspection, and that the average labor rate is $60 per work hour. Based on these figures, the cost impact of the inspection proposed by this AD on U.S. operators is estimated to be $29,700, or $300 per airplane, per inspection cycle.

The cost impact figure discussed above is based on assumptions that no operator has yet accomplished any of the proposed requirements of this AD action, and that no operator would accomplish those actions in the future if this AD were not adopted.

Regulatory Impact

The regulations proposed herein would not have substantial direct effects on the States, on the relationship between the national government and the States, or on the distribution of power and responsibilities among the various levels of government. Therefore, in accordance with Executive Order 12612, it is determined that this proposal would not have sufficient federalism implications to warrant the preparation of a Federalism Assessment.

For the reasons discussed above, I certify that this proposed regulation (1) is not a ''significant regulatory action'' under Executive Order 12866; (2) is not a ''significant rule'' under the DOT Regulatory Policies and Procedures (44 FR 11034, February 26, 1979); and (3) if promulgated, will not have a significant economic impact, positive or negative, on a substantial number of small entities under the criteria of the Regulatory Flexibility Act. A copy of the draft regulatory evaluation prepared for this action is contained in the Rules Docket. A copy of it may be obtained by contacting the Rules Docket at the location provided under the caption **ADDRESSES.**

List of Subjects in 14 CFR Part 39

Air transportation, Aircraft, Aviation safety, Safety.

The Proposed Amendment

Accordingly, pursuant to the authority delegated to me by the Administrator, the Federal Aviation Administration proposes to amend part 39 of the Federal Aviation Regulations (14 CFR part 39) as follows:

PART 39—AIRWORTHINESS DIRECTIVES

1. The authority citation for part 39 continues to read as follows:

Authority: 49 U.S.C. 106(g), 40113, 44701.

§ 39.13 [Amended]

2. Section 39.13 is amended by adding the following new airworthiness directive:

Short Brothers PLC: Docket 98–NM–203–AD.

Applicability: All Model SD3–30, SD3–60, SD3–60 SHERPA, and SD3 SHERPA series airplanes, certificated in any category.

Note 1: This AD applies to each airplane identified in the preceding applicability provision, regardless of whether it has been modified, altered, or repaired in the area subject to the requirements of this AD. For airplanes that have been modified, altered, or repaired so that the performance of the requirements of this AD is affected, the owner/operator must request approval for an alternative method of compliance in accordance with paragraph (b) of this AD. The request should include an assessment of the effect of the modification, alteration, or repair on the unsafe condition addressed by this AD; and, if the unsafe condition has not been eliminated, the request should include specific proposed actions to address it.

Compliance: Required as indicated, unless accomplished previously.

To prevent failure of the levers and bracket assembly, which could result in uncommanded retraction of the inner flap assembly and consequent reduced controllability of the airplane:

(a) Within 90 days after the effective date of this AD: Perform a visual inspection of the levers and bracket assembly of the inner flap sub-assembly of the left and right wings to detect discrepancies (i.e., corrosion, cracking, protective coating breakdown, and inadequate clearances between the forward face of the lower levers and the bracket web), in accordance with the applicable Shorts service bulletin specified below, all dated January 14, 1997:

- SD360–27–26 (for Model SD3–60 series airplanes);
- SD360 Sherpa 27–1 (for Model SD3–60 SHERPA series airplanes);
- SD3 Sherpa 27–2 (for Model SD3 SHERPA series airplanes); and
- SD3–27–36 (for Model SD3–30 series airplanes).

(1) If no discrepancy is detected, repeat the visual inspection thereafter at intervals not to exceed 4,800 flight hours or 24 months, whichever occurs earlier.

(2) If any discrepancy is detected, prior to further flight, rework the affected area, and accomplish follow-on corrective actions, in accordance with the applicable service bulletin.

(i) If the reworked parts remain within the allowable rework limits specified in the applicable service bulletin, repeat the visual inspection of the levers and bracket assembly thereafter at intervals not to exceed 1,200 flight hours or 6 months, whichever occurs earlier.

(ii) If any reworked part is outside the allowable rework limits specified in the applicable service bulletin, prior to further flight, replace the reworked part with a new part. Thereafter, repeat the inspection at intervals not to exceed 4,800 flight hours or 24 months, whichever occurs earlier.

(b) An alternative method of compliance or adjustment of the compliance time that provides an acceptable level of safety may be used if approved by the Manager, International Branch, ANM–116, FAA, Transport Airplane Directorate. Operators shall submit their requests through an appropriate FAA Principal Maintenance Inspector, who may add comments and then send it to the Manager, International Branch, ANM–116.

Note 2: Information concerning the existence of approved alternative methods of compliance with this AD, if any, may be obtained from the International Branch, ANM–116.

(c) Special flight permits may be issued in accordance with sections 21.197 and 21.199 of the Federal Aviation Regulations (14 CFR 21.197 and 21.199) to operate the airplane to

a location where the requirements of this AD can be accomplished.

Note 3: The subject of this AD is addressed in British airworthiness directives 008–01–97, 010–01–97, 011–01–97, and 009–01–97.

Issued in Renton, Washington, on August 6, 1998.

Darrell M. Pederson,

Acting Manager, Transport Airplane Directorate, Aircraft Certification Service.

[FR Doc. 98–21658 Filed 8–12–98; 8:45 am]

BILLING CODE 4910–13–P

DEPARTMENT OF TRANSPORTATION

Federal Aviation Administration

14 CFR Part 39

[Docket No. 98–NM–175–AD]

RIN 2120–AA64

Airworthiness Directives; Aerospatiale Model ATR42 Series Airplanes

AGENCY: Federal Aviation Administration, DOT.

ACTION: Notice of proposed rulemaking (NPRM).

SUMMARY: This document proposes the supersedure of an existing airworthiness directive (AD), applicable to certain Aerospatiale Model ATR42–300 and –320 series airplanes, that currently requires a one-time inspection of the main landing gear (MLG) actuator fitting bolt holes for correct alignment, and rework of the fitting surface and bolt replacement, if necessary. This action would require replacement of the MLG actuator fitting bolts with new, improved bolts. This action also would revise the applicability of the existing AD. This proposal is prompted by issuance of mandatory continuing airworthiness information by a foreign civil airworthiness authority. The actions specified by the proposed AD are intended to prevent failure of the MLG actuator fitting bolts, which could result in the inability to retract the MLG and attain an adequate climb gradient.

DATES: Comments must be received by September 14, 1998.

ADDRESSES: Submit comments in triplicate to the Federal Aviation Administration (FAA), Transport Airplane Directorate, ANM–114, Attention: Rules Docket No. 98–NM–175–AD, 1601 Lind Avenue, SW., Renton, Washington 98055–4056. Comments may be inspected at this location between 9:00 a.m. and 3:00 p.m., Monday through Friday, except Federal holidays.

The service information referenced in the proposed rule may be obtained from AI(R) American Support, Inc., 13850 Mclearen Road, Herndon, Virginia 20171. This information may be examined at the FAA, Transport Airplane Directorate, 1601 Lind Avenue, SW., Renton, Washington.

FOR FURTHER INFORMATION CONTACT: Norman B. Martenson, Manager, International Branch, ANM–116, FAA, Transport Airplane Directorate, 1601 Lind Avenue, SW., Renton, Washington 98055–4056; telephone (425) 227–2110; fax (425) 227–1149.

SUPPLEMENTARY INFORMATION:

Comments Invited

Interested persons are invited to participate in the making of the proposed rule by submitting such written data, views, or arguments as they may desire. Communications shall identify the Rules Docket number and be submitted in triplicate to the address specified above. All communications received on or before the closing date for comments, specified above, will be considered before taking action on the proposed rule. The proposals contained in this notice may be changed in light of the comments received.

Comments are specifically invited on the overall regulatory, economic, environmental, and energy aspects of the proposed rule. All comments submitted will be available, both before and after the closing date for comments, in the Rules Docket for examination by interested persons. A report summarizing each FAA-public contact concerned with the substance of this proposal will be filed in the Rules Docket.

Commenters wishing the FAA to acknowledge receipt of their comments submitted in response to this notice must submit a self-addressed, stamped postcard on which the following statement is made: ''Comments to Docket Number 98–NM–175–AD.'' The postcard will be date stamped and returned to the commenter.

Availability of NPRMs

Any person may obtain a copy of this NPRM by submitting a request to the FAA, Transport Airplane Directorate, ANM–114, Attention: Rules Docket No. 98–NM–175–AD, 1601 Lind Avenue, SW., Renton, Washington 98055–4056.

Discussion

On September 5, 1990, the FAA issued AD 90–19–06, amendment 39–6727 (55 FR 37457, September 12, 1990), applicable to certain Aerospatiale Model ATR42–300 and ATR42–320 series airplanes, to require a one-time inspection of the main landing gear (MLG) actuator fitting bolt holes for correct alignment, and rework of the fitting surface and bolt replacement, if necessary. That AD also revises the applicability of another AD to add certain airplanes and to delete other airplanes that have been modified. That action was prompted by the issuance of new service information. The requirements of that AD are intended to prevent failure of the MLG actuator attachment fitting bolts, which could result in the inability to retract the MLG and attain an adequate climb gradient.

Actions Since Issuance of Previous Rule

Since the issuance of AD 90–19–06, the Direction Générale de l'Aviation Civile (DGAC), which is the airworthiness authority for France, notified the FAA that the actions required by that AD do not adequately preclude failure of the MLG actuator attachment fitting bolts, which could result in the inability to retract the MLG and attain an adequate climb gradient. The DGAC also advised that, since the MLG actuator attachment fitting bolts on Aerospatiale Model ATR42–200 and –500 series airplanes are similar in design to those bolts installed on Aerospatiale Model ATR42–300 and –320 series airplanes, Model ATR42–200 and –500 series airplanes also are subject to the same unsafe condition.

Explanation of Relevant Service Information

Additionally, since issuance of AD 90–19–06, the manufacturer has issued Avions de Transport Regional Service Bulletin ATR42–53–0112, dated January 20, 1998, which describes procedures for replacement of the MLG actuator fitting bolts with new bolts having a larger diameter. Accomplishment of the actions specified in the service bulletin is intended to adequately address the identified unsafe condition. The DGAC classified this service bulletin as mandatory and issued French airworthiness directive 97–115–070(B)R1, dated February 11, 1998, in order to assure the continued airworthiness of these airplanes in France.

FAA's Conclusions

These airplane models are manufactured in France and are type certificated for operation in the United States under the provisions of section 21.29 of the Federal Aviation Regulations (14 CFR 21.29) and the applicable bilateral airworthiness agreement. Pursuant to this bilateral airworthiness agreement, the DGAC has kept the FAA informed of the situation described above. The FAA has examined the findings of the DGAC,

reviewed all available information, and determined that AD action is necessary for products of this type design that are certificated for operation in the United States.

Explanation of Requirements of Proposed Rule

Since an unsafe condition has been identified that is likely to exist or develop on other airplanes of the same type design registered in the United States, the proposed AD would supersede AD 90–19–06 to require replacement of the MLG actuator fitting bolts with new, improved bolts. This proposed AD also would revise the applicability of the existing AD. The actions would be required to be accomplished in accordance with the service bulletin described previously.

Cost Impact

There are approximately 79 airplanes of U.S. registry that would be affected by this proposed AD.

The new replacement that is proposed in this AD action would take approximately 12 work hours per airplane to accomplish, at an average labor rate of $60 per work hour. Required parts would cost approximately $250 per airplane. Based on these figures, the cost impact of the proposed replacement of this AD on U.S. operators is estimated to be $76,630, or $970 per airplane.

The cost impact figure discussed above is based on assumptions that no operator has yet accomplished any of the current or proposed requirements of this AD action, and that no operator would accomplish those actions in the future if this AD were not adopted.

Regulatory Impact

The regulations proposed herein would not have substantial direct effects on the States, on the relationship between the national government and the States, or on the distribution of power and responsibilities among the various levels of government. Therefore, in accordance with Executive Order 12612, it is determined that this proposal would not have sufficient federalism implications to warrant the preparation of a Federalism Assessment.

For the reasons discussed above, I certify that this proposed regulation (1) is not a ''significant regulatory action'' under Executive Order 12866; (2) is not a ''significant rule'' under the DOT Regulatory Policies and Procedures (44 FR 11034, February 26, 1979); and (3) if promulgated, will not have a significant economic impact, positive or negative, on a substantial number of small entities under the criteria of the Regulatory Flexibility Act. A copy of the draft regulatory evaluation prepared for this action is contained in the Rules Docket. A copy of it may be obtained by contacting the Rules Docket at the location provided under the caption **ADDRESSES.**

List of Subjects in 14 CFR Part 39

Air transportation, Aircraft, Aviation safety, Safety.

The Proposed Amendment

Accordingly, pursuant to the authority delegated to me by the Administrator, the Federal Aviation Administration proposes to amend part 39 of the Federal Aviation Regulations (14 CFR part 39) as follows:

PART 39—AIRWORTHINESS DIRECTIVES

1. The authority citation for part 39 continues to read as follows:

Authority: 49 U.S.C. 106(g), 40113, 44701.

§ 39.13 [Amended]

2. Section 39.13 is amended by removing amendment 39–6727 (55 FR 37457, eptember 12, 1990), and by adding a new airworthiness directive (AD), to read as follows:

Aerospatiale: Docket 98–NM–175–AD. Supersedes AD 90–19–06, Amendment 39–6727.

Applicability: Model ATR42–200, –300 –320, and –500 series airplanes; except for airplanes on which either Aerospatiale Modification 4052 or Avions de Transport Regional Service Bulletin ATR42–53–0097, dated November 7, 1997, or Revision 1, dated January 20, 1997, has been accomplished; certificated in any category.

Note 1: This AD applies to each airplane identified in the preceding applicability provision, regardless of whether it has been otherwise modified, altered, or repaired in the area subject to the requirements of this AD. For airplanes that have been modified, altered, or repaired so that the performance of the requirements of this AD is affected, the owner/operator must request approval for an alternative method of compliance in accordance with paragraph (b) of this AD. The request should include an assessment of the effect of the modification, alteration, or repair on the unsafe condition addressed by this AD; and, if the unsafe condition has not been eliminated, the request should include specific proposed actions to address it.

Compliance: Required as indicated, unless accomplished previously.

To prevent failure of the main landing gear (MLG) actuator fitting bolts, which could result in the inability to retract the MLG and attain an adequate climb gradient, accomplish the following:

(a) Within 7 months after the effective date of this AD, replace the MLG actuator fitting bolts with new, improved bolts in accordance with Avions de Transport Regional Service Bulletin ATR42–53–0112, dated January 20, 1998.

(b) An alternative method of compliance or adjustment of the compliance time that provides an acceptable level of safety may be used if approved by the Manager, Manager, International Branch, ANM–116, FAA, Transport Airplane Directorate. Operators shall submit their requests through an appropriate FAA Principal Maintenance Inspector, who may add comments and then send it to the Manager, International Branch, ANM–116.

Note 2: Information concerning the existence of approved alternative methods of compliance with this AD, if any, may be obtained from the International Branch, ANM–116.

(c) Special flight permits may be issued in accordance with sections 21.197 and 21.199 of the Federal Aviation Regulations (14 CFR 21.197 and 21.199) to operate the airplane to a location where the requirements of this AD can be accomplished.

Note 3: The subject of this AD is addressed in French airworthiness directive 97–115–070(B)R1, dated February 11, 1998.

Issued in Renton, Washington, on August 6, 1998.

Darrell M. Pederson,

Acting Manager, Transport Airplane Directorate, Aircraft Certification Service.

[FR Doc. 98–21657 Filed 8–12–98; 8:45 am]

BILLING CODE 4910–13–P

DEPARTMENT OF TRANSPORTATION

Federal Aviation Administration

14 CFR Part 39

[Docket No. 97–CE–153–AD]

RIN 2120–AA64

Airworthiness Directives; Raytheon Aircraft Company Models 1900, 1900C, and 1900D Airplanes

AGENCY: Federal Aviation Administration, DOT.

ACTION: Notice of proposed rulemaking (NPRM).

SUMMARY: This document proposes to adopt a new airworthiness directive (AD) that would apply to certain Raytheon Aircraft Company (Raytheon) Models 1900, 1900C, and 1900D airplanes. The proposed action would require modifying the emergency exit doors and installing interior and exterior placards on each of the emergency exit doors. Difficulty in opening the emergency exit doors prompted the proposed action. The actions specified by the proposed AD are intended to prevent passengers and crew from not being able to open the emergency exit doors during an airplane emergency, which could result in passenger and crew injuries.

DATES: Comments must be received on or before October 12, 1998.

ADDRESSES: Submit comments in triplicate to the Federal Aviation Administration (FAA), Central Region, Office of the Regional Counsel, Attention: Rules Docket No. 97–CE–153–AD, Room 1558, 601 E. 12th Street, Kansas City, Missouri 64106. Comments may be inspected at this location between 8 a.m. and 4 p.m., Monday through Friday, holidays excepted.

Service information that applies to the proposed AD may be obtained from Raytheon Aircraft Company, P.O. Box 85, Wichita, Kansas 67201–0085. This information also may be examined at the Rules Docket at the address above.

FOR FURTHER INFORMATION CONTACT: Mr. Steven E. Potter, Aerospace Engineer, Wichita Aircraft Certification Office, FAA, 1801 Airport Road, Mid-Continent Airport, Wichita, Kansas 67209; telephone: (316) 946–4124; facsimile: (316) 946–4407.

SUPPLEMENTARY INFORMATION:

Comments Invited

Interested persons are invited to participate in the making of the proposed rule by submitting such written data, views, or arguments as they may desire. Communications should identify the Rules Docket number and be submitted in triplicate to the address specified above. All communications received on or before the closing date for comments, specified above, will be considered before taking action on the proposed rule. The proposals contained in this notice may be changed in light of the comments received.

Comments are specifically invited on the overall regulatory, economic, environmental, and energy aspects of the proposed rule. All comments submitted will be available, both before and after the closing date for comments, in the Rules Docket for examination by interested persons. A report that summarizes each FAA-public contact concerned with the substance of this proposal will be filed in the Rules Docket.

Commenters wishing the FAA to acknowledge receipt of their comments submitted in response to this notice must submit a self-addressed, stamped postcard on which the following statement is made: ''Comments to Docket No. 97–CE–153–AD.'' The postcard will be date stamped and returned to the commenter.

Availability of NPRMs

Any person may obtain a copy of this NPRM by submitting a request to the FAA, Central Region, Office of the Regional Counsel, Attention: Rules Docket No. 97–CE–153–AD, Room 1558, 601 E. 12th Street, Kansas City, Missouri 64106.

Discussion

The FAA has received reports that the emergency exit doors on the Raytheon 1900, 1900C and 1900D series airplanes are difficult for passengers and crew to open during an emergency situation. Further investigation revealed that the placards placed on the emergency exit doors may also be difficult for passengers and crew to read and understand in an instance when it is imperative to exit the airplane quickly.

Relevant Service Information

Raytheon has issued Mandatory Service Bulletin No. 2740, Revision 1, Issued: April, 1997; Revised: June, 1997, which specifies procedures for modifying the door handle and lock mechanism. This modification would include removing and replacing the emergency exit door mechanism pushrods, trimming the existing turnbuckle clevises, and re-rigging the emergency doors. The service bulletin also specifies procedures for installing new placards on the emergency exit doors that have revised wording for better instruction on opening the exit in an emergency. This wording is easier to read and understand.

The FAA's Determination

After examining the circumstances and reviewing all available information related to the incidents described above, the FAA has determined that AD action should be taken to help prevent passengers and crew from not being able to open the emergency exit doors during an airplane emergency, which could result in passenger and crew injuries.

Explanation of the Provisions of the Proposed AD

Since an unsafe condition has been identified that is likely to exist or develop in other Raytheon Models 1900, 1900C, and 1900D airplanes of the same type design, the proposed AD would require modifying the emergency exit doors and installing placards on the emergency exit doors within the clear view of the passengers and crew. Accomplishment of the modification and installation would be required in accordance with Raytheon Aircraft Mandatory Service Bulletin No. 2740, Revision 1, Issued: April, 1997; Revised: June, 1997.

Cost Impact

The FAA estimates that 527 airplanes in the U.S. registry would be affected by the proposed AD, that it would take approximately 12 workhours per airplane to accomplish the proposed action, and that the average labor rate is approximately $60 an hour. Parts cost approximately $1,200 per airplane. Based on these figures, the total cost impact of the proposed AD on U.S. operators is estimated to be $1,011,840, or $1,920 per airplane.

The manufacturer has informed the FAA that 94 of the affected airplanes are already in compliance with the proposed action. Therefore, the estimated total cost impact would be reduced by approximately $180,480 from $1,011,840 to $831,360.

Regulatory Impact

The regulations proposed herein would not have substantial direct effects on the States, on the relationship between the national government and the States, or on the distribution of power and responsibilities among the various levels of government. Therefore, in accordance with Executive Order 12612, it is determined that this proposal would not have sufficient federalism implications to warrant the preparation of a Federalism Assessment.

For the reasons discussed above, I certify that this action (1) is not a ''significant regulatory action'' under Executive Order 12866; (2) is not a ''significant rule'' under DOT Regulatory Policies and Procedures (44 FR 11034, February 26, 1979); and (3) if promulgated, will not have a significant economic impact, positive or negative, on a substantial number of small entities under the criteria of the Regulatory Flexibility Act. A copy of the draft regulatory evaluation prepared for this action has been placed in the Rules Docket. A copy of it may be obtained by contacting the Rules Docket at the location provided under the caption **ADDRESSES**.

List of Subjects in 14 CFR Part 39

Air transportation, Aircraft, Aviation safety, Safety.

The Proposed Amendment

Accordingly, pursuant to the authority delegated to me by the Administrator, the Federal Aviation Administration proposes to amend part 39 of the Federal Aviation Regulations (14 CFR part 39) as follows:

PART 39—AIRWORTHINESS DIRECTIVES

1. The authority citation for part 39 continues to read as follows:

Authority: 49 U.S.C. 106(g), 40113, 44701.

§ 39.13 [Amended]

2. Section 39.13 is amended by adding a new airworthiness directive (AD) to read as follows:

Raytheon Aircraft Company: Docket No. 97–CE–153–AD.

Applicability: The following model and serial number airplanes, certificated in any category:

Model	Serial Nos.
1900	UA–2 and UA–3.
1900C	UB–1 through UB–74, and UC–1 through UC–174.
1900C (C–12J)	UD–1 through UD–6.
1900D	UE–1 through UE–271.

Note 1: This AD applies to each airplane identified in the preceding applicability provision, regardless of whether it has been modified, altered, or repaired in the area subject to the requirements of this AD. For airplanes that have been modified, altered, or repaired so that the performance of the requirements of this AD is affected, the owner/operator must request approval for an alternative method of compliance in accordance with paragraph (d) of this AD. The request should include an assessment of the effect of the modification, alteration, or repair on the unsafe condition addressed by this AD; and, if the unsafe condition has not been eliminated, the request should include specific proposed actions to address it.

Compliance: Required within the next 600 hours time-in-service (TIS) after the effective date of this AD, unless already accomplished.

To help prevent passengers and crew from not being able to open the emergency exit doors during an airplane emergency, which could result in passenger and crew injuries, accomplish the following:

(a) Modify the airplane emergency exit doors by removing and replacing door mechanism pushrods, trimming the existing turnbuckle clevises, and re-rigging the emergency exit doors in accordance with PART I of the Accomplishment Instructions section in Raytheon Aircraft (Raytheon) Mandatory Service Bulletin (MSB) No. 2740, Revision 1, Issued: April, 1997; Revised: June, 1997.

(b) Install placards on the interior and exterior of the emergency exit doors in accordance with PART II and PART III of the Accomplishment Instructions section in Raytheon MSB No. 2740, Revision 1, Issued: April, 1997; Revised: June, 1997.

(c) Special flight permits may be issued in accordance with sections 21.197 and 21.199 of the Federal Aviation Regulations (14 CFR 21.197 and 21.199) to operate the airplane to a location where the requirements of this AD can be accomplished.

(d) An alternative method of compliance or adjustment of the compliance time that provides an equivalent level of safety may be approved by the Manager, Wichita Aircraft Certification Office (ACO), 1801 Airport Road, Room 100, Mid-Continent Airport, Wichita, Kansas 67209. The request shall be forwarded through an appropriate FAA Maintenance Inspector, who may add comments and then send it to the Manager, Wichita ACO.

Note 2: Information concerning the existence of approved alternative methods of compliance with this AD, if any, may be obtained from the Wichita ACO.

(e) All persons affected by this directive may obtain copies of the document referred to herein upon request to the Raytheon Aircraft Corporation, P.O. Box 85, Wichita, Kansas 67201–0085; or may examine this document at the FAA, Central Region, Office of the Regional Counsel, Room 1558, 601 E. 12th Street, Kansas City, Missouri 64106.

Issued in Kansas City, Missouri, on August 6, 1998.

Michael Gallagher,

Manager, Small Airplane Directorate, Aircraft Certification Service.

[FR Doc. 98–21650 Filed 8–12–98; 8:45 am]

BILLING CODE 4910–13–U

DEPARTMENT OF TRANSPORTATION

Federal Aviation Administration

14 CFR Part 39

[Docket No. 97–NM–305–AD]

RIN 2120–AA64

Airworthiness Directives; Raytheon Model BAe.125, DH.125, BH.125, and HS.125 Series Airplanes

AGENCY: Federal Aviation Administration, DOT.

ACTION: Notice of proposed rulemaking (NPRM).

SUMMARY: This document proposes to revise an existing airworthiness directive (AD), applicable to certain Raytheon Model BAe.125, DH.125, BH.125, and HS.125 series airplanes, that currently requires inspection of the elevator mass balance side plate assembly and spigot for corrosion, and repair, if necessary; application of corrosion protection treatment; and installation of corrosion resistant Monel rivets in the elevator balance weight structure. That AD was prompted by reports of corrosion on the elevator mass balance side plate assembly and the balance weight spigot. The actions specified by that AD are intended to prevent such corrosion damage, which could lead to displacement of the side plate and consequent control surface interference and jamming of flight controls. This action would limit the applicability of the existing AD.

DATES: Comments must be received by September 28, 1998.

ADDRESSES: Submit comments in triplicate to the Federal Aviation Administration (FAA), Transport Airplane Directorate, ANM–114, Attention: Rules Docket No. 97–NM–305–AD, 1601 Lind Avenue, SW., Renton, Washington 98055–4056. Comments may be inspected at this location between 9:00 a.m. and 3:00 p.m., Monday through Friday, except Federal holidays.

The service information referenced in the proposed rule may be obtained from Raytheon Aircraft Company, Manager Service Engineering, Hawker Customer Support Department, P.O. Box 85, Wichita, Kansas 67201–0085. This information may be examined at the FAA, Transport Airplane Directorate, 1601 Lind Avenue, SW., Renton, Washington.

FOR FURTHER INFORMATION CONTACT: Mark Quam, Aerospace Engineer, Standardization Branch, ANM–113, FAA, Transport Airplane Directorate, 1601 Lind Avenue, SW., Renton, Washington 98055–4056; telephone (425) 227–2145; fax (425) 227–1149.

SUPPLEMENTARY INFORMATION:

Comments Invited

Interested persons are invited to participate in the making of the proposed rule by submitting such written data, views, or arguments as they may desire. Communications shall identify the Rules Docket number and be submitted in triplicate to the address specified above. All communications received on or before the closing date for comments, specified above, will be considered before taking action on the proposed rule. The proposals contained in this notice may be changed in light of the comments received.

Comments are specifically invited on the overall regulatory, economic, environmental, and energy aspects of the proposed rule. All comments submitted will be available, both before and after the closing date for comments, in the Rules Docket for examination by interested persons. A report summarizing each FAA-public contact concerned with the substance of this proposal will be filed in the Rules Docket.

Commenters wishing the FAA to acknowledge receipt of their comments submitted in response to this notice must submit a self-addressed, stamped postcard on which the following statement is made: ''Comments to Docket Number 97–NM–305–AD.'' The postcard will be date stamped and returned to the commenter.

Availability of NPRMs

Any person may obtain a copy of this NPRM by submitting a request to the FAA, Transport Airplane Directorate, ANM–114, Attention: Rules Docket No. 97–NM–305–AD, 1601 Lind Avenue, SW., Renton, Washington 98055–4056.

Discussion

On August 7, 1989, the FAA issued AD 89–18–07, amendment 39–6297 (54 FR 33874, August 17, 1989), applicable to certain Raytheon Model BAe.125, DH.125, BH.125, and HS.125 series airplanes, to require inspection of the elevator mass balance side plate assembly and spigot for corrosion, and repair, if necessary; the application of corrosion protection treatment; and installation of corrosion resistant Monel rivets in the elevator balance weight structure. That action was prompted by reports of corrosion on the elevator mass balance side plate assembly and the balance weight spigot. The requirements of that AD are intended to prevent such corrosion, which could lead to displacement of the side plate and consequent control surface interference and jamming of flight controls.

Actions Since Issuance of Previous Rule

Since the issuance of AD 89–18–07, the FAA has reviewed and approved Revision 3 of British Aerospace Service Bulletin S.B. 27–142, dated November 13, 1989. This revised service bulletin is essentially identical to Revision 2 of the service bulletin, which was referenced in AD 89–18–07 as the appropriate source of service information. The only relevant change is a revised effectivity listing that includes the statement, ''up to and including series 700.''

Explanation of Requirements of Proposed Rule

Since an unsafe condition has been identified that is likely to exist or develop on other products of this same type design, the proposed AD would revise AD 89–18–07. It would continue to require inspection of the elevator mass balance side plate assembly and spigot for corrosion, and repair, if necessary; application of corrosion protection treatment; and installation of corrosion resistant Monel rivets in the elevator balance weight structure. The proposed AD also would limit the applicability of the existing AD. The actions would be required to be accomplished in accordance with the service bulletin described previously.

Cost Impact

Since this proposed AD would merely delete airplanes from the applicability of the rule, it would add no additional costs, and would require no additional work to be performed by affected operators. The current costs associated with this amendment are reiterated in their entirety (as follows) for the convenience of affected operators:

The FAA estimates that 346 airplanes of U.S. registry would be affected by this proposed AD, that it would take approximately 10 work hours per airplane to accomplish the proposed actions, and that the average labor rate is $60 per work hour. Based on these figures, the cost impact of the proposed AD on U.S. operators is estimated to be $207,600, or $600 per airplane.

The cost impact figure discussed above is based on assumptions that no operator has yet accomplished any of the proposed requirements of this AD action, and that no operator would accomplish those actions in the future if this AD were not adopted.

Regulatory Impact

The regulations proposed herein would not have substantial direct effects on the States, on the relationship between the national government and the States, or on the distribution of power and responsibilities among the various levels of government. Therefore, in accordance with Executive Order 12612, it is determined that this proposal would not have sufficient federalism implications to warrant the preparation of a Federalism Assessment.

For the reasons discussed above, I certify that this proposed regulation (1) is not a ''significant regulatory action'' under Executive Order 12866; (2) is not a ''significant rule'' under the DOT Regulatory Policies and Procedures (44 FR 11034, February 26, 1979); and (3) if promulgated, will not have a significant economic impact, positive or negative, on a substantial number of small entities under the criteria of the Regulatory Flexibility Act. A copy of the draft regulatory evaluation prepared for this action is contained in the Rules Docket. A copy of it may be obtained by contacting the Rules Docket at the location provided under the caption **ADDRESSES.**

List of Subjects in 14 CFR Part 39

Air transportation, Aircraft, Aviation safety, Safety.

The Proposed Amendment

Accordingly, pursuant to the authority delegated to me by the Administrator, the Federal Aviation Administration proposes to amend part 39 of the Federal Aviation Regulations (14 CFR part 39) as follows:

PART 39—AIRWORTHINESS DIRECTIVES

1. The authority citation for part 39 continues to read as follows:

Authority: 49 U.S.C. 106(g), 40113, 44701.

§ 39.13 [Amended]

2. Section 39.13 is amended by removing amendment 39–6297 (54 FR 33874, August 17, 1989), and by adding a new airworthiness directive (AD), to read as follows:

Raytheon Aircraft Company (Formerly Beech, Raytheon Corporate Jets, British Aerospace, Hawker Siddeley, et al.): Docket 97–NM–305–AD. Revises AD 89–18–07, Amendment 39–6297.

Applicability: Model BAe.125, DH.125, BH.125, and HS.125 series airplanes; up to and including series 700; certificated in any category.

Note 1: This AD applies to each airplane identified in the preceding applicability provision, regardless of whether it has been modified, altered, or repaired in the area subject to the requirements of this AD. For airplanes that have been modified, altered, or repaired so that the performance of the requirements of this AD is affected, the owner/operator must request approval for an alternative method of compliance in accordance with paragraph (b) of this AD. The request should include an assessment of the effect of the modification, alteration, or repair on the unsafe condition addressed by this AD; and, if the unsafe condition has not been eliminated, the request should include specific proposed actions to address it.

Note 2: Raytheon (Beech) Model DH.125–400B, BH.125–400B and –600B, HS.125–600B and –700B, and BAe 125–800B series airplanes are similar in design to the airplanes that are subject to the requirements of this AD, and, therefore, also may be subject to the unsafe condition addressed by this AD. However, as of the effective date of this AD, those models are not type certificated for operation in the United States. Airworthiness authorities of countries in which those models are approved for operation should consider adopting corrective action, applicable to these models, that is similar to the corrective action required by this AD.

Compliance: Required as indicated, unless accomplished previously.

To prevent control surface interference and jamming of flight controls, accomplish the following:

(a) Within 3 years since the date of airplane manufacture, or within 60 days after September 21, 1989 (the effective date of AD 89–18–07, amendment 39–6297), whichever occurs later, accomplish the following:

(1) Inspect the elevator mass balance weight side plate assembly and balance weight spigot for corrosion, in accordance with British Aerospace Service Bulletin 27–142, Revision 2, dated June 10, 1987, or Revision 3, dated November 13, 1989. Any corrosion detected during this inspection must be repaired prior to further flight, in accordance with the service bulletin.

(2) Apply corrosion protection treatment and install Monel rivets, part number MS9318–052, or British Standard Specification SP88–304 rivets, in the elevator balance weight structure, in accordance with British Aerospace Service Bulletin 27–142, Revision 2, dated June 10, 1987, or Revision 3, dated November 13, 1989.

(b) An alternative method of compliance or adjustment of the compliance time that provides an acceptable level of safety may be used if approved by the Manager, Standardization Branch, ANM–113, FAA, Transport Airplane Directorate. Operators shall submit their requests through an appropriate FAA Principal Maintenance Inspector, who may add comments and then send it to the Manager, Standardization Branch, ANM–113.

Note 3: Information concerning the existence of approved alternative methods of compliance with this AD, if any, may be obtained from the Standardization Branch, ANM–113.

(c) Special flight permits may be issued in accordance with sections 21.197 and 21.199 of the Federal Aviation Regulations (14 CFR 21.197 and 21.199) to operate the airplane to a location where the requirements of this AD can be accomplished.

Issued in Renton, Washington, on August 7, 1998.

Darrell M. Pederson,

Acting Manager, Transport Airplane Directorate, Aircraft Certification Service.

[FR Doc. 98–21720 Filed 8–12–98; 8:45 am]

BILLING CODE 4910–13–P

DEPARTMENT OF TRANSPORTATION

Federal Aviation Administration

14 CFR Part 39

[Docket No. 98–NM–84–AD]

RIN 2120–AA64

Airworthiness Directives; Lockheed Model L–188A and L–188C Series Airplanes

AGENCY: Federal Aviation Administration, DOT.

ACTION: Notice of proposed rulemaking (NPRM).

SUMMARY: This document proposes the adoption of a new airworthiness directive (AD) that is applicable to all Lockheed Model L–188A and L–188C series airplanes. This proposal would require revising the Airplane Flight Manual to provide the flightcrew with modified procedures and limitations for operating in icing conditions. This proposal is prompted by incidents and accidents involving airplanes equipped with turboprop engines that experienced tailplane stall due to ice accretion on the horizontal stabilizer of the airplane. The actions specified by the proposed AD are intended to prevent undetected accretion of ice on the horizontal stabilizer, which could result in ice contaminated tailplane stall and consequent loss of pitch control.

DATES: Comments must be received by September 28, 1998.

ADDRESSES: Submit comments in triplicate to the Federal Aviation Administration (FAA), Transport Airplane Directorate, ANM–114, Attention: Rules Docket No. 98–NM–84–AD, 1601 Lind Avenue, SW., Renton, Washington 98055–4056. Comments may be inspected at this location between 9:00 a.m. and 3:00 p.m., Monday through Friday, except Federal holidays.

The service information referenced in the proposed rule may be obtained from Lockheed Aeronautical Systems Support Company (LASSC), Field Support Department, Dept. 693, Zone 0755, 2251 Lake Park Drive, Smyrna, Georgia 30080. This information may be examined at the FAA, Transport Airplane Directorate, 1601 Lind Avenue, SW., Renton, Washington; or at the FAA, Small Airplane Directorate, Atlanta Aircraft Certification Office, One Crown Center, 1895 Phoenix Boulevard, suite 450, Atlanta, Georgia.

FOR FURTHER INFORMATION CONTACT: Thomas Peters, Aerospace Engineer, Systems and Flight Test Branch, ACE–116A, FAA, Small Airplane Directorate, Atlanta Aircraft Certification Office, One Crown Center, 1895 Phoenix Boulevard, suite 450, Atlanta, Georgia 30337–2748; telephone (770) 703–6063; fax (770) 703–6097.

SUPPLEMENTARY INFORMATION:

Comments Invited

Interested persons are invited to participate in the making of the proposed rule by submitting such written data, views, or arguments as they may desire. Communications shall identify the Rules Docket number and be submitted in triplicate to the address specified above. All communications received on or before the closing date for comments, specified above, will be considered before taking action on the proposed rule. The proposals contained in this notice may be changed in light of the comments received.

Comments are specifically invited on the overall regulatory, economic, environmental, and energy aspects of the proposed rule. All comments submitted will be available, both before and after the closing date for comments, in the Rules Docket for examination by interested persons. A report summarizing each FAA-public contact concerned with the substance of this proposal will be filed in the Rules Docket.

Commenters wishing the FAA to acknowledge receipt of their comments submitted in response to this notice must submit a self-addressed, stamped postcard on which the following statement is made: ''Comments to Docket Number 98–NM–84–AD.'' The postcard will be date stamped and returned to the commenter.

Availability of NPRMs

Any person may obtain a copy of this NPRM by submitting a request to the FAA, Transport Airplane Directorate, ANM–114, Attention: Rules Docket No. 98–NM–84–AD, 1601 Lind Avenue, SW., Renton, Washington 98055–4056.

Discussion

Several accidents and reported incidents that involved airplanes equipped with turboprop engines prompted the FAA to research the predicted characteristics of tailplane stall in airplanes equipped with turboprop engines. Results of that research indicated that airplanes equipped with turboprop engines were susceptible to incidents of tailplane stall when the effects of strong slipstream downwash from the propellers were combined with ice accretion on the leading edge of the horizontal stabilizer.

As a result of that research, Lockheed Model L–188A and L–188C series airplanes were determined possibly to be susceptible to such incidents of tailplane stall. It was discovered that a higher accretion efficiency of the leading edge of the horizontal tail could result in ice accretions not being detected by the flightcrew, which could lead to a delay in activation of the ice protection system. Such undetected accretion of ice on the horizontal stabilizer of the airplane, if not corrected, could result in ice contaminated tailplane stall and consequent loss of pitch control.

FAA's Determination

In light of this information, the FAA finds that certain procedures should be included in the FAA-approved AFM's for these airplanes to provide the flightcrew with modified procedures and limitations for operating in icing conditions and to take appropriate action to prevent accretion of ice on the horizontal stabilizer of the airplane in certain icing conditions. The FAA has determined that such procedures currently are not defined adequately in the AFM for these airplanes.

Explanation of Relevant Service Information

The FAA has reviewed and approved revisions, dated December 1, 1997, and March 10, 1998, for incorporation into the Limitations, Normal Procedures, and Performance Sections and Appendix III of the FAA-approved Electra 188A Airplane Flight Manual (AFM). These revisions provide the flightcrew with modified procedures and limitations for operating in icing conditions. The revisions specify that, when flying in icing conditions with the flaps extended, the flightcrew should maintain the leading edge of the horizontal stabilizer at a temperature of 25 degrees Celsius or higher using the empennage ice protection system or, alternatively, the empennage ice protection system may be activated and operated continuously in an anti-ice mode.

The FAA also has reviewed and approved revisions, dated December 1, 1997, and March 10, 1998, for incorporation into the Limitations, Normal Procedures, and Performance Sections and Appendix III of the FAA-approved Electra 188C AFM. These revisions are similar to the revisions to the Electra 188A AFM described previously.

Explanation of Requirements of Proposed Rule

Since an unsafe condition has been identified that is likely to exist or develop on other products of this same type design, the proposed AD would require revising the Limitations, Normal Procedures, and Performance Sections and Appendix III of the Electra 188A and 188C AFM's to provide the flightcrew with modified procedures and limitations for operating in icing conditions.

Cost Impact

There are approximately 75 airplanes of the affected design in the worldwide fleet. The FAA estimates that 32 airplanes of U.S. registry would be affected by this proposed AD, that it would take approximately 1 work hour per airplane to accomplish the proposed incorporation of the AFM revisions, and that the average labor rate is $60 per work hour. Based on these figures, the cost impact of the proposed AD on U.S. operators is estimated to be $1,920, or $60 per airplane.

The cost impact figure discussed above is based on assumptions that no operator has yet accomplished any of the proposed requirements of this AD action, and that no operator would accomplish those actions in the future if this AD were not adopted.

Regulatory Impact

The regulations proposed herein would not have substantial direct effects on the States, on the relationship between the national government and the States, or on the distribution of power and responsibilities among the various levels of government. Therefore, in accordance with Executive Order 12612, it is determined that this proposal would not have sufficient federalism implications to warrant the preparation of a Federalism Assessment.

For the reasons discussed above, I certify that this proposed regulation (1) is not a ''significant regulatory action'' under Executive Order 12866; (2) is not a ''significant rule'' under the DOT Regulatory Policies and Procedures (44 FR 11034, February 26, 1979); and (3) if promulgated, will not have a significant economic impact, positive or negative, on a substantial number of small entities under the criteria of the Regulatory Flexibility Act. A copy of the draft regulatory evaluation prepared for this action is contained in the Rules Docket. A copy of it may be obtained by contacting the Rules Docket at the location provided under the caption **ADDRESSES.**

List of Subjects in 14 CFR Part 39

Air transportation, Aircraft, Aviation safety, Safety.

The Proposed Amendment

Accordingly, pursuant to the authority delegated to me by the Administrator, the Federal Aviation Administration proposes to amend part 39 of the Federal Aviation Regulations (14 CFR part 39) as follows:

PART 39—AIRWORTHINESS DIRECTIVES

1. The authority citation for part 39 continues to read as follows:

Authority: 49 U.S.C. 106(g), 40113, 44701.

§ 39.13 [Amended]

2. Section 39.13 is amended by adding the following new airworthiness directive:

Lockheed: Docket 98–NM–84–AD.

Applicability: All Model L–188A and L–188C series airplanes, certificated in any category.

Note 1: This AD applies to each airplane identified in the preceding applicability provision, regardless of whether it has been modified, altered, or repaired in the area subject to the requirements of this AD. For airplanes that have been modified, altered, or repaired so that the performance of the requirements of this AD is affected, the owner/operator must request approval for an alternative method of compliance in accordance with paragraph (b) of this AD. The request should include an assessment of the effect of the modification, alteration, or repair on the unsafe condition addressed by this AD; and, if the unsafe condition has not been eliminated, the request should include specific proposed actions to address it.

Compliance: Required as indicated, unless accomplished previously.

To prevent undetected accretion of ice on the horizontal stabilizer, which could result in ice contaminated tailplane stall and consequent loss of pitch control, accomplish the following:

(a) Within 30 days after the effective date of this AD, revise the Limitations, Normal Procedures, and Performance Sections and Appendix III of the FAA-approved Electra 188A or 188C Airplane Flight Manual (AFM), as applicable, to include the pages specified in Table 1 (for Model L–188A series airplanes), Table 2 (for Model L–188C series airplanes not equipped with Hamilton Standard propellers), or Table 3 (for Model L–188C series airplanes equipped with Hamilton Standard propellers) of this AD, as applicable.

TABLE 1.—REVISIONS TO THE ELECTRA 188A AFM FOR ALL MODEL L–188A SERIES AIRPLANES

Section No.	Section	Page No.	Date shown on page
Preface	Log of Pages	i	March 10, 1998.
Preface	Log of Pages	ii	March 10, 1998.
1	Limitations	6	December 1, 1997.
3	Normal Procedures	10.1	December 1, 1997.
3	Normal Procedures	11	March 10, 1998.
3	Normal Procedures	12	December 1, 1997.
4	Performance	A	December 1, 1997.
4	Performance	6	December 1, 1997.
4	Performance	8	December 1, 1997.
4	Performance	12	December 1, 1997.

TABLE 1.—REVISIONS TO THE ELECTRA 188A AFM FOR ALL MODEL L–188A SERIES AIRPLANES—Continued

Section No.	Section	Page No.	Date shown on page
4	Performance	12.1	December 1, 1997.
4	Performance	12.2	December 1, 1997.
Appendix III	Alt. Flap Data	B	December 1, 1997.

TABLE 2.—REVISIONS TO THE ELECTRA 188C AFM FOR MODEL L–188C SERIES AIRPLANES NOT EQUIPPED WITH HAMILTON STANDARD PROPELLERS

Section No.	Section	Page No.	Date shown on page
Preface	Log of Pages	i	March 10, 1998.
Preface	Log of Pages	ii	March 10, 1998.
1	Limitations	6	December 1, 1997.
3	Normal Procedures	12.1	December 1, 1997.
3	Normal Procedures	13	March 10, 1998.
3	Normal Procedures	14	December 1, 1997.
4	Performance	A	December 1, 1997.
4	Performance	6	December 1, 1997.
4	Performance	8	December 1, 1997.
4	Performance	12	December 1, 1997.
4	Performance	12.1	December 1, 1997.
4	Performance	12.2	December 1, 1997.
Appendix III	Alt. Flap Data	B	December 1, 1997.

TABLE 3.—REVISIONS TO THE ELECTRA 188C AFM FOR MODEL L–188C SERIES AIRPLANES EQUIPPED WITH HAMILTON STANDARD PROPELLERS

Section No.	Section	Page No.	Date shown on page
Preface	Log of Pages	i	March 10, 1998.
Preface	Log of Pages	ii	March 10, 1998.
1	Limitations	6	December 1, 1997.
3	Normal Procedures	12.1	December 1, 1997.
3	Normal Procedures	13	March 10, 1998.
3	Normal Procedures	14	December 1, 1997.
A4	Performance	A	December 1, 1997.
A4	Performance	6	December 1, 1997.
A4	Performance	8	December 1, 1997.
A4	Performance	12	December 1, 1997.
A4	Performance	12.1	December 1, 1997.
A4	Performance	12.2	December 1, 1997.
Appendix AIII	Alt. Flap Data	B	December 1, 1997.

(b) An alternative method of compliance or adjustment of the compliance time that provides an acceptable level of safety may be used if approved by the Manager, Atlanta Aircraft Certification Office (ACO), FAA, Small Airplane Directorate. Operators shall submit their requests through an appropriate FAA Principal Operations Inspector, who may add comments and then send it to the Manager, Atlanta ACO.

Note 2: Information concerning the existence of approved alternative method of compliance with this AD, if any, may be obtained from the Atlanta ACO.

(c) Special flight permits may be issued in accordance with sections 21.197 and 21.199 of the Federal Aviation Regulations (14 CFR 21.197 and 21.199) to operate the airplane to a location where the requirements of this AD can be accomplished.

Issued in Renton, Washington, on August 7, 1998.

Darrell M. Pederson,

Acting Manager, Transport Airplane Directorate, Aircraft Certification Service.

[FR Doc. 98–21719 Filed 8–12–98; 8:45 am]

BILLING CODE 4910–13–P

DEPARTMENT OF TRANSPORTATION

Federal Aviation Administration

14 CFR Part 39

[Docket No. 98–NM–92–AD]

RIN 2120–AA64

Airworthiness Directives; Fokker Model F27 Mark 050, 100, 200, 300, 400, 500, 600, and 700 Rough Field Version (RFV) Series Airplanes

AGENCY: Federal Aviation Administration, DOT.

ACTION: Notice of proposed rulemaking (NPRM).

SUMMARY: This document proposes the supersedure of an existing airworthiness directive (AD), applicable to certain Fokker Model F27 Mark 100, 200, 300, 400, 500, 600, and 700 Rough Field Version (RFV) series airplanes, that currently requires inspection of the main landing gear (MLG) legs to determine if parts are missing or damaged, and modification, if necessary; and periodic measurements of the extension of each MLG shock absorber sliding member. That AD also provides for the accomplishment of a certain modification as optional terminating action for the periodic measurements. This action would require accomplishment of the previously optional terminating action. This action also would revise the applicability of the existing AD to add an airplane model. This proposal is prompted by issuance of mandatory continuing airworthiness information by a foreign civil airworthiness authority. The actions specified by the proposed AD are intended to prevent loss of the MLG sliding member, which could result in reduced structural integrity of the MLG.

DATES: Comments must be received by September 14, 1998.

ADDRESSES: Submit comments in triplicate to the Federal Aviation Administration (FAA), Transport Airplane Directorate, ANM–114, Attention: Rules Docket No. 98–NM–92–AD, 1601 Lind Avenue, SW., Renton, Washington 98055–4056. Comments may be inspected at this location between 9:00 a.m. and 3:00 p.m., Monday through Friday, except Federal holidays.

The service information referenced in the proposed rule may be obtained from Fokker Services B.V., Technical Support Department, P.O. Box 75047, 1117 ZN Schiphol Airport, the Netherlands. This information may be examined at the FAA, Transport Airplane Directorate, 1601 Lind Avenue, SW., Renton, Washington.

FOR FURTHER INFORMATION CONTACT: Norman B. Martenson, Manager, International Branch, ANM–116, FAA, Transport Airplane Directorate, 1601 Lind Avenue, SW., Renton, Washington 98055–4056; telephone (425) 227–2110; fax (425) 227–1149.

SUPPLEMENTARY INFORMATION:

Comments Invited

Interested persons are invited to participate in the making of the proposed rule by submitting such written data, views, or arguments as they may desire. Communications shall identify the Rules Docket number and be submitted in triplicate to the address specified above. All communications received on or before the closing date for comments, specified above, will be considered before taking action on the proposed rule. The proposals contained in this notice may be changed in light of the comments received.

Comments are specifically invited on the overall regulatory, economic, environmental, and energy aspects of the proposed rule. All comments submitted will be available, both before and after the closing date for comments, in the Rules Docket for examination by interested persons. A report summarizing each FAA-public contact concerned with the substance of this proposal will be filed in the Rules Docket.

Commenters wishing the FAA to acknowledge receipt of their comments submitted in response to this notice must submit a self-addressed, stamped postcard on which the following statement is made: ''Comments to Docket Number 98–NM–92–AD.'' The postcard will be date stamped and returned to the commenter.

Availability of NPRMs

Any person may obtain a copy of this NPRM by submitting a request to the FAA, Transport Airplane Directorate, ANM–114, Attention: Rules Docket No. 98–NM–92–AD, 1601 Lind Avenue, SW., Renton, Washington 98055–4056.

Discussion

On October 28, 1993, the FAA issued AD 93–22–02, amendment 39–8727 (58 FR 60370, November 16, 1993), applicable to certain Fokker Model F27 Mark 100, 200, 300, 400, 500, 600, and 700 Rough Field Version (RFV) series airplanes, to require inspection of the main landing gear (MLG) legs to determine if parts are missing or damaged, and modification, if necessary; and periodic measurements of the extension of each MLG shock absorber sliding member. That AD also provides for the accomplishment of a certain modification as optional terminating action for the periodic measurements. That AD was prompted by reports of overextension of the MLG sliding member due to missing parts in the MLG leg assembly. The requirements of that AD are intended to prevent loss of the MLG sliding member, which could result in reduced structural integrity of the MLG.

Actions Since Issuance of Previous Rule

Since the issuance of that AD, the Rijksluchtvaartdienst (RLD), which is the airworthiness authority for the Netherlands, notified the FAA that it received a report indicating that, during routine maintenance on an in-service Fokker Model F27 Mark 050 series airplane, maintenance personnel discovered a dowel and a castellation missing from an MLG assembly. Further investigation revealed that the inspections of the MLG legs to determine if parts are missing or damaged, as specified in Fokker Service Bulletin F50–32–025 (Messier-Dowty Service Bulletin F50–32–48), had been accomplished previously on the airplane.

Further, the RLD advised the FAA that modification of the MLG assembly should be accomplished to ensure correct assembly of the piston rod. Therefore, the FAA has determined that this modification (which was specified as optional in AD 93–22–02) is necessary in order to positively address the identified unsafe condition..

Additionally, in AD 93–22–02, the FAA referenced the applicability as ''Fokker Model F27 Rough Field Version (RFV) series airplanes, excluding Model F27 Mark 050 series airplanes.'' However, the FAA has determined that the applicability of the existing AD should be clarified by specifying that it applies to Fokker Model F27 Mark 100, 200, 300, 400, 500, 600, and 700 Rough Field Version (RFV) series airplanes. In addition, the FAA finds that Fokker Model F27 Mark 050 series airplanes also are subject to the identified unsafe condition; therefore, those airplanes are specified in the applicability of this proposed AD.

Explanation of Relevant Service Information

The manufacturer of the landing gear has issued Messier-Dowty Service Bulletin F50–32–48, Revision 4, dated June 21, 1995 (for Model F27 Mark 050 series airplanes), which describes detailed procedures for inspecting the MLG piston rod and adapter to confirm the correct installation of the stepped pin and dowel. It also describes procedures for periodic measurements of the extension of the MLG sliding member when the landing gear is fully extended.

The manufacturer of the landing gear also has issued Dowty Aerospace Landing Gear Service Bulletin F50–32–27, Revision 4, dated December 18, 1992 (for Model F27 Mark 050 series airplanes), which describes procedures for modification of the MLG piston rod assembly. This modification involves the installation of a shim between the contact face of the piston rod and adapter, and the installation of a pin in lieu of the currently installed dowel to secure the castellated nut to the adapter.

Accomplishment of the modification would eliminate the need for inspections and periodic measurements of the extension of the MLG shock absorber sliding member.

For Model F27 Mark 100, 200, 300, 400, 500, 600, and 700 series airplanes, Fokker has issued Service Bulletin F27–32–165, Revision 1, dated April 28, 1993; and the manufacture of the landing gear has issued Dowty Aerospace Landing Gear Service Bulletin 32–81W, Revision 2, dated February 3, 1993, and Dowty Aerospace Landing Gear Service Bulletin 32–77W, Revision 4, dated February 3, 1993. As described in AD 93–22–02, these service bulletins inspection of the MLG legs to determine if parts are missing or damaged, and modification, if necessary; and periodic measurements of each MLG shock absorber sliding member. Further, Dowty Aerospace Landing Gear Service Bulletin 32–77W describes procedures for modification of the MLG assembly, which would eliminate the need for the inspections and periodic measurements discussed previously.

Accomplishment of the actions specified in the service bulletins is intended to adequately address the identified unsafe condition. The RLD classified these service bulletins as mandatory and issued Dutch airworthiness directive 1996–159/2 (A), dated July 31, 1997, in order to assure the continued airworthiness of these airplanes in the Netherlands.

FAA's Conclusions

These airplane models are manufactured in the Netherlands and are type certificated for operation in the United States under the provisions of section 21.29 of the Federal Aviation Regulations (14 CFR 21.29) and the applicable bilateral airworthiness agreement. Pursuant to this bilateral airworthiness agreement, the RLD has kept the FAA informed of the situation described above. The FAA has examined the findings of the RLD, reviewed all available information, and determined that AD action is necessary for products of this type design that are certificated for operation in the United States.

Explanation of Requirements of Proposed Rule

Since an unsafe condition has been identified that is likely to exist or develop on other airplanes of the same type design registered in the United States, the proposed AD would supersede AD 93–22–02 to continue to require inspection of the MLG legs to determine if parts are missing or damaged, and modification, if necessary; and periodic measurements of the extension of each MLG shock absorber sliding member. In addition, this proposed AD also would require accomplishment of the previously optional terminating action and would revise the applicability of the existing AD to add an airplane model.

The actions would be required to be accomplished in accordance with the service bulletins described previously.

Cost Impact

There are approximately 34 Fokker Model F27 Mark 100, 200, 300, 400, 500, 600, and 700 RFV series airplanes, and no Fokker Model F27 Mark 050 series airplanes, of U.S. registry that would be affected by this proposed AD.

The actions that are currently required by AD 93–22–02, and retained in this proposed AD, would take approximately 3 work hours per airplane to accomplish, at an average labor rate of $60 per work hour. Based on these figures, the cost impact of the currently required inspections on U.S. operators is estimated to be $6,120, or $180 per airplane, per inspection cycle.

The new modification that is proposed in this AD action would take approximately 2 work hours per airplane to accomplish, at an average labor rate of $60 per work hour. Required parts would be supplied by the manufacturer at no cost to the operators. Based on these figures, the cost impact of the modification proposed by this AD on U.S. operators is estimated to be $4,080, or $120 per airplane.

The cost impact figures discussed above are based on assumptions that no operator has yet accomplished any of the current or proposed requirements of this AD action, and that no operator would accomplish those actions in the future if this AD were not adopted.

Regulatory Impact

The regulations proposed herein would not have substantial direct effects on the States, on the relationship between the national government and the States, or on the distribution of power and responsibilities among the various levels of government. Therefore, in accordance with Executive Order 12612, it is determined that this proposal would not have sufficient federalism implications to warrant the preparation of a Federalism Assessment.

For the reasons discussed above, I certify that this proposed regulation (1) is not a ''significant regulatory action'' under Executive Order 12866; (2) is not a ''significant rule'' under the DOT Regulatory Policies and Procedures (44 FR 11034, February 26, 1979); and (3) if promulgated, will not have a significant economic impact, positive or negative, on a substantial number of small entities under the criteria of the Regulatory Flexibility Act. A copy of the draft regulatory evaluation prepared for this action is contained in the Rules Docket. A copy of it may be obtained by contacting the Rules Docket at the location provided under the caption **ADDRESSES.**

List of Subjects in 14 CFR Part 39

Air transportation, Aircraft, Aviation safety, Safety.

The Proposed Amendment

Accordingly, pursuant to the authority delegated to me by the Administrator, the Federal Aviation Administration proposes to amend part 39 of the Federal Aviation Regulations (14 CFR part 39) as follows:

PART 39—AIRWORTHINESS DIRECTIVES

1. The authority citation for part 39 continues to read as follows:

Authority: 49 U.S.C. 106(g), 40113, 44701.

§ 39.13 [Amended]

2. Section 39.13 is amended by removing amendment 39–8727 (58 FR 60370, November 16, 1993), and by adding a new airworthiness directive (AD), to read as follows:

Fokker Services B.V.: Docket 98–NM–92–AD. Supersedes AD 93–22–02, Amendment 39–8727.

Applicability: Model F27 Mark 050, 100, 200, 300, 400, 500, 600, and 700 Rough Field Version (RFV) series airplanes, equipped with Dowty Aerospace MLG Legs, part and serial numbers as listed in Dowty Aerospace Landing Gear Service Bulletin 32–77W, Revision 4, dated February 3, 1993, or Dowty Aerospace Landing Gear Service Bulletin F50–32–27, Revision 4, dated December 18, 1992; certificated in any category.

Note 1: This AD applies to each airplane identified in the preceding applicability provision, regardless of whether it has been modified, altered, or repaired in the area subject to the requirements of this AD. For airplanes that have been modified, altered, or repaired so that the performance of the requirements of this AD is affected, the owner/operator must request approval for an alternative method of compliance in accordance with paragraph (g) of this AD. The request should include an assessment of the effect of the modification, alteration, or repair on the unsafe condition addressed by this AD; and, if the unsafe condition has not been eliminated, the request should include specific proposed actions to address it.

Compliance: Required as indicated, unless accomplished previously.

To prevent loss of the MLG sliding member, which could result in reduced

structural integrity of the MLG, accomplish the following:

Restatement of Requirements of AD 93–22–02

(a) For Model F27 Mark 100, 200, 300, 400, 500, 600, and 700 RFV series airplanes, equipped with Dowty Aerospace MLG, part numbers 200563001, 200679001, 200679002, 200679003, or 200679004: Within 30 days after December 16, 1993 (the effective date of AD 93–22–02, amendment 39–8727), inspect the MLG legs to confirm the correct installation of the sliding member out-stop installation, in accordance with Fokker Service Bulletin F27–32–165, Revision 1, dated April 28, 1993, and paragraph 2.C. (''Part A Procedure'') of Dowty Aerospace Landing Gear Service Bulletin 32–81W, Revision 2, dated February 3, 1993. If any parts are determined to be missing or damaged, prior to further flight, modify the MLG assembly, in accordance with Dowty Aerospace Landing Gear Service Bulletin 32–77W, Revision 4, dated February 3, 1993.

(b) For Model F27 Mark 100, 200, 300, 400, 500, 600, and 700 RFV series airplanes, equipped with Dowty Aerospace MLG, part numbers 200563001, 200679001, 200679002, 200679003, or 200679004: Within 30 days after December 16, 1993, measure and record the extension of the MLG sliding member when the landing gear is fully extended, in accordance with paragraph 2.D. (''Part B Procedure'') of Dowty Aerospace Landing Gear Service Bulletin 32–81W, Revision 2, dated February 3, 1993.

(1) If the extension dimension exceeds 410.2 mm (16.15 inches), prior to further flight, modify the MLG assembly in accordance with Dowty Aerospace Landing Gear Service Bulletin 32–77W, Revision 4, dated February 3, 1993.

(2) If the extension dimension is equal to or less than 410.2 mm (16.15 inches), repeat the measurement thereafter at intervals not to exceed 500 flight cycles.

(3) If the extension dimension increases by more than 1.0 mm (0.40 inch) above the initially recorded dimension during any measurement required by this paragraph, prior to further flight, inspect the MLG in accordance with paragraph (a) of this AD.

New Requirements of This AD

(c) For airplanes other than those identified in paragraph (a) of this AD: Within 30 days after the effective date of this AD, inspect the MLG legs to confirm the correct installation of the sliding member out-stop installation, in accordance with paragraph 2.C. (''Part A Procedure'') of Messier-Dowty Service Bulletin F50–32–48, Revision 4, dated June 21, 1995. If any parts are determined to be missing or damaged, prior to further flight, modify the MLG assembly, in accordance with Dowty Aerospace Landing Gear Service Bulletin F50–32–27, Revision 4, dated December 18, 1992.

(d) For airplanes other than those identified in paragraph (a) of this AD: Within 30 days after the effective date of this AD, measure and record the extension of the MLG sliding member when the landing gear is fully extended, in accordance with paragraph 2.D. (''Part B Procedure'') of Messier-Dowty Service Bulletin F50–32–48, Revision 4, dated June 21, 1995.

(1) If the extension dimension exceeds 410.2 mm (16.15 inches), prior to further flight, modify the MLG assembly in accordance with Dowty Aerospace Landing Gear Service Bulletin F50–32–27, Revision 4, dated December 18, 1992.

(2) If the extension dimension is equal to or less than 410.2 mm (16.15 inches), repeat the measurement thereafter at intervals not to exceed 500 flight cycles.

(3) If the extension dimension increases by more than 1.0 mm (0.40 inch) above the initially recorded dimension during any measurement required by this paragraph, prior to further flight, inspect the MLG in accordance with paragraph (c) of this AD.

(e) For all airplanes: Within 5,000 flight cycles or 24 months after the effective date of this AD, whichever occurs earlier, modify the MLG piston rod assembly, in accordance with Dowty Aerospace Landing Gear Service Bulletin 32–77W, Revision 4, dated February 3, 1993 (for Model F27 Mark 100, 200, 300, 400, 500, 600, and 700 series airplanes), or Dowty Aerospace Landing Gear Service Bulletin F50–32–27, Revision 4, dated December 18, 1992 (for Model F27 Mark 050 series airplanes), as applicable. Accomplishment of this modification constitutes terminating action for the repetitive actions required by this AD.

(f) As of the effective date of this AD, no person shall install on any airplane, an MLG piston rod assembly, unless it has been modified in accordance with Dowty Aerospace Landing Gear Service Bulletin 32–77W, Revision 4, dated February 3, 1993 (for Model F27 Mark 100, 200, 300, 400, 500, 600, and 700 series airplanes), or Dowty Aerospace Landing Gear Service Bulletin F50–32–27, Revision 4, dated December 18, 1992 (for Model F27 Mark 050 series airplanes), as applicable.

(g) An alternative method of compliance or adjustment of the compliance time that provides an acceptable level of safety may be used if approved by the Manager, International Branch, ANM–116, FAA, Transport Airplane Directorate. Operators shall submit their requests through an appropriate FAA Principal Maintenance Inspector, who may add comments and then send it to the Manager, International Branch, ANM–116.

Note 2: Information concerning the existence of approved alternative methods of compliance with this AD, if any, may be obtained from the International Branch, ANM–116.

(h) Special flight permits may be issued in accordance with sections 21.197 and 21.199 of the Federal Aviation Regulations (14 CFR 21.197 and 21.199) to operate the airplane to a location where the requirements of this AD can be accomplished.

Note 3: The subject of this AD is addressed in Dutch airworthiness directive 1996–159/2 (A), dated July 31, 1997.

Issued in Renton, Washington, on August 7, 1998.

Darrell M. Pederson,

Acting Manager, Transport Airplane Directorate, Aircraft Certification Service.

[FR Doc. 98–21718 Filed 8–12–98; 8:45 am]

BILLING CODE 4910–13–P

DEPARTMENT OF TRANSPORTATION

Federal Aviation Administration

14 CFR Part 39

[Docket No. 98–NM–168–AD]

RIN 2120–AA64

Airworthiness Directives; British Aerospace (Jetstream) Model 4101 Airplanes

AGENCY: Federal Aviation Administration, DOT.

ACTION: Notice of proposed rulemaking (NPRM).

SUMMARY: This document proposes the adoption of a new airworthiness directive (AD) that is applicable to certain British Aerospace (Jetstream) Model 4101 airplanes. This proposal would require replacement of the existing load limitation labels located in the main baggage compartment with new reduced load limitation labels. This proposal also provides for optional modification of the internal access door of the main baggage compartment, which, if accomplished, would terminate the requirement for reduced load limitations. This proposal is prompted by issuance of mandatory continuing airworthiness information by a foreign civil airworthiness authority. The actions specified by the proposed AD are intended to prevent failure of the internal access door latches of the main baggage compartment in the event of an emergency landing, which could delay or impede passenger evacuation due to baggage spilling into the aisle and blocking the emergency exit door.

DATES: Comments must be received by September 14, 1998.

ADDRESSES: Submit comments in triplicate to the Federal Aviation Administration (FAA), Transport Airplane Directorate, ANM–114, Attention: Rules Docket No. 98–NM–168–AD, 1601 Lind Avenue, SW., Renton, Washington 98055–4056. Comments may be inspected at this location between 9:00 a.m. and 3:00 p.m., Monday through Friday, except Federal holidays.

The service information referenced in the proposed rule may be obtained from AI(R) American Support, Inc., 13850

Mclearen Road, Herndon, Virginia 20171. This information may be examined at the FAA, Transport Airplane Directorate, 1601 Lind Avenue, SW., Renton, Washington.

FOR FURTHER INFORMATION CONTACT: Norman B. Martenson, Manager, International Branch, ANM–116, FAA, Transport Airplane Directorate, 1601 Lind Avenue, SW., Renton, Washington 98055–4056; telephone (425) 227–2110; fax (425) 227–1149.

SUPPLEMENTARY INFORMATION:

Comments Invited

Interested persons are invited to participate in the making of the proposed rule by submitting such written data, views, or arguments as they may desire. Communications shall identify the Rules Docket number and be submitted in triplicate to the address specified above. All communications received on or before the closing date for comments, specified above, will be considered before taking action on the proposed rule. The proposals contained in this notice may be changed in light of the comments received.

Comments are specifically invited on the overall regulatory, economic, environmental, and energy aspects of the proposed rule. All comments submitted will be available, both before and after the closing date for comments, in the Rules Docket for examination by interested persons. A report summarizing each FAA-public contact concerned with the substance of this proposal will be filed in the Rules Docket.

Commenters wishing the FAA to acknowledge receipt of their comments submitted in response to this notice must submit a self-addressed, stamped postcard on which the following statement is made: ''Comments to Docket Number 98–NM–168–AD.'' The postcard will be date stamped and returned to the commenter.

Availability of NPRMs

Any person may obtain a copy of this NPRM by submitting a request to the FAA, Transport Airplane Directorate, ANM–114, Attention: Rules Docket No. 98–NM–168–AD, 1601 Lind Avenue, SW., Renton, Washington 98055–4056.

Discussion

The Civil Aviation Authority (CAA), which is the airworthiness authority for the United Kingdom, notified the FAA that an unsafe condition may exist on certain British Aerospace (Jetstream) Model 4101 airplanes. The CAA advises that tests have shown that, under certain conditions, the internal access door of the main baggage compartment does not meet crashworthiness requirements, and that the door latches could fail. This applies to the internal access door of the main baggage compartment when only two latches are installed, and when an unrestrained baggage load in excess of 765 or 850 pounds (depending on the airplane modification status) is carried. Failure of the door latches, if not corrected, could result in baggage spilling into the aisle and blocking the emergency exit door in the event of an emergency landing, which could delay or impede passenger evacuation.

Explanation of Relevant Service Information

The manufacturer has issued Jetstream Service Bulletin J41–11–010, dated August 9, 1997, which describes procedures for replacement of the existing load limitation labels located in the main baggage compartment with new reduced load limitation labels. Accomplishment of the actions specified in the service bulletin is intended to adequately address the identified unsafe condition. The CAA classified this service bulletin as mandatory and issued British airworthiness directive 004–08–97 in order to assure the continued airworthiness of these airplanes in the United Kingdom.

The manufacturer also has issued Jetstream Service Bulletin J41–25–020, dated August 9, 1997, which describes procedures for optional modification of the main baggage compartment internal access door by installation of two additional latches. This modification, if accomplished, would eliminate the need for the reduced load limitations.

FAA's Conclusions

This airplane model is manufactured in the United Kingdom and is type certificated for operation in the United States under the provisions of section 21.29 of the Federal Aviation Regulations (14 CFR 21.29) and the applicable bilateral airworthiness agreement. Pursuant to this bilateral airworthiness agreement, the CAA has kept the FAA informed of the situation described above. The FAA has examined the findings of the CAA, reviewed all available information, and determined that AD action is necessary for products of this type design that are certificated for operation in the United States.

Explanation of Requirements of Proposed Rule

Since an unsafe condition has been identified that is likely to exist or develop on other airplanes of the same type design registered in the United States, the proposed AD would require accomplishment of the replacement specified in Jetstream Service Bulletin J41–11–010, described previously. The proposed AD also provides for an optional modification, as described in Jetstream Service Bulletin J41–25–020, which, if accomplished, would terminate the requirement for reduced load limitations.

Cost Impact

The FAA estimates that 57 airplanes of U.S. registry would be affected by this proposed AD, it would take approximately 1 work hour per airplane to accomplish the proposed replacement, at an average labor rate of $60 per work hour. Required parts would be provided by the manufacturer at no cost to the operators. Based on these figures, the cost impact of the replacement proposed by this AD on U.S. operators is estimated to be $3,420, or $60 per airplane.

The cost impact figure discussed above is based on assumptions that no operator has yet accomplished any of the proposed requirements of this AD action, and that no operator would accomplish those actions in the future if this AD were not adopted.

Regulatory Impact

The regulations proposed herein would not have substantial direct effects on the States, on the relationship between the national government and the States, or on the distribution of power and responsibilities among the various levels of government. Therefore, in accordance with Executive Order 12612, it is determined that this proposal would not have sufficient federalism implications to warrant the preparation of a Federalism Assessment.

For the reasons discussed above, I certify that this proposed regulation (1) is not a ''significant regulatory action'' under Executive Order 12866; (2) is not a ''significant rule'' under the DOT Regulatory Policies and Procedures (44 FR 11034, February 26, 1979); and (3) if promulgated, will not have a significant economic impact, positive or negative, on a substantial number of small entities under the criteria of the Regulatory Flexibility Act. A copy of the draft regulatory evaluation prepared for this action is contained in the Rules Docket. A copy of it may be obtained by contacting the Rules Docket at the location provided under the caption **ADDRESSES**.

List of Subjects in 14 CFR Part 39

Air transportation, Aircraft, Aviation safety, Safety.

The Proposed Amendment

Accordingly, pursuant to the authority delegated to me by the Administrator, the Federal Aviation Administration proposes to amend part 39 of the Federal Aviation Regulations (14 CFR part 39) as follows:

PART 39—AIRWORTHINESS DIRECTIVES

1. The authority citation for part 39 continues to read as follows:

Authority: 49 U.S.C. 106(g), 40113, 44701.

§ 39.13 [Amended]

2. Section 39.13 is amended by adding the following new airworthiness directive:

British Aerospace Regional Aircraft [Formerly Jetstream Aircraft Limited; British Aerospace (Commercial Aircraft) Limited]: Docket 98–NM–168–AD.

Applicability: Jetstream Model 4101 airplanes, as listed in Jetstream Service Bulletin J41–11–010, dated August 9, 1997; certificated in any category.

Note 1: This AD applies to each airplane identified in the preceding applicability provision, regardless of whether it has been modified, altered, or repaired in the area subject to the requirements of this AD. For airplanes that have been modified, altered, or repaired so that the performance of the requirements of this AD is affected, the owner/operator must request approval for an alternative method of compliance in accordance with paragraph (c) of this AD. The request should include an assessment of the effect of the modification, alteration, or repair on the unsafe condition addressed by this AD; and, if the unsafe condition has not been eliminated, the request should include specific proposed actions to address it.

Compliance: Required as indicated, unless accomplished previously.

To prevent failure of the internal access door latches of the main baggage compartment in the event of an emergency landing, which could delay or impede passenger evacuation due to baggage spilling into the aisle and blocking the emergency exit door, accomplish the following:

(a) Within 30 days after the effective date of this AD, replace the existing load limitation labels in the main baggage compartment with new reduced load limitation labels, in accordance with Jetstream Service Bulletin J41–11–010, dated August 9, 1997.

(b) Modification of the internal access door of the main baggage compartment in accordance with Jetstream Service Bulletin J41–25–020, dated August 9, 1997, constitutes terminating action for the requirements of paragraph (a) of this AD.

(c) An alternative method of compliance or adjustment of the compliance time that provides an acceptable level of safety may be used if approved by the Manager, International Branch, ANM–116, FAA, Transport Airplane Directorate. Operators shall submit their requests through an appropriate FAA Principal Maintenance Inspector, who may add comments and then send it to the Manager, International Branch, ANM–116.

Note 2: Information concerning the existence of approved alternative methods of compliance with this AD, if any, may be obtained from the International Branch, ANM–116.

(d) Special flight permits may be issued in accordance with sections 21.197 and 21.199 of the Federal Aviation Regulations (14 CFR 21.197 and 21.199) to operate the airplane to a location where the requirements of this AD can be accomplished.

Note 3: The subject of this AD is addressed in British airworthiness directive 004–08–97.

Issued in Renton, Washington, on August 7, 1998.

Darrell M. Pederson,

Acting Manager, Transport Airplane Directorate, Aircraft Certification Service.

[FR Doc. 98–21717 Filed 8–12–98; 8:45 am]

BILLING CODE CODE 4910–13–P

DEPARTMENT OF TRANSPORTATION

Federal Aviation Administration

14 CFR Part 39

[Docket No. 98–NM–173–AD]

RIN 2120–AA64

Airworthiness Directives; Dornier Model 328–100 Series Airplanes

AGENCY: Federal Aviation Administration, DOT.

ACTION: Notice of proposed rulemaking (NPRM).

SUMMARY: This document proposes the supersedure of an existing airworthiness directive (AD), applicable to all Dornier Model 328–100 series airplanes, that currently requires repetitive visual inspections for signs of fuel leakage on the outer wing beginning with Rib 21 and continuing outward; and corrective action, if necessary. This action would add a requirement for modification of the lower panels of the outer wing area, which would terminate the repetitive inspection requirements. This action also would limit the applicability of the existing AD. This proposal is prompted by issuance of mandatory continuing airworthiness information by a foreign civil airworthiness authority. The actions specified by the proposed AD are intended to prevent fuel leakage on the outboard wing, which could result in a fuel explosion and fire.

DATES: Comments must be received by September 14, 1998.

ADDRESSES: Submit comments in triplicate to the Federal Aviation Administration (FAA), Transport Airplane Directorate, ANM–114, Attention: Rules Docket No. 98–NM–173–AD, 1601 Lind Avenue, SW., Renton, Washington 98055–4056. Comments may be inspected at this location between 9:00 a.m. and 3:00 p.m., Monday through Friday, except Federal holidays.

The service information referenced in the proposed rule may be obtained from FAIRCHILD DORNIER, DORNIER Luftfahrt GmbH, P.O. Box 1103, D–82230 Wessling, Germany. This information may be examined at the FAA, Transport Airplane Directorate, 1601 Lind Avenue, SW., Renton, Washington.

FOR FURTHER INFORMATION CONTACT: Norman B. Martenson, Manager, International Branch, ANM–116, FAA, Transport Airplane Directorate, 1601 Lind Avenue, SW., Renton, Washington 98055–4056; telephone (425) 227–2110; fax (425) 227–1149.

SUPPLEMENTARY INFORMATION:

Comments Invited

Interested persons are invited to participate in the making of the proposed rule by submitting such written data, views, or arguments as they may desire. Communications shall identify the Rules Docket number and be submitted in triplicate to the address specified above. All communications received on or before the closing date for comments, specified above, will be considered before taking action on the proposed rule. The proposals contained in this notice may be changed in light of the comments received.

Comments are specifically invited on the overall regulatory, economic, environmental, and energy aspects of the proposed rule. All comments submitted will be available, both before and after the closing date for comments, in the Rules Docket for examination by interested persons. A report summarizing each FAA-public contact concerned with the substance of this proposal will be filed in the Rules Docket.

Commenters wishing the FAA to acknowledge receipt of their comments submitted in response to this notice must submit a self-addressed, stamped postcard on which the following statement is made: ''Comments to Docket Number 98–NM–173–AD.'' The postcard will be date stamped and returned to the commenter.

Availability of NPRMs

Any person may obtain a copy of this NPRM by submitting a request to the FAA, Transport Airplane Directorate, ANM–114, Attention: Rules Docket No.

98–NM–173–AD, 1601 Lind Avenue SW., Renton, Washington 98055–4056.

Discussion

On February 4, 1998, the FAA issued AD 98–04–06, amendment 39–10319 (63 FR 6642, February 10, 1998), applicable to all Dornier Model 328–100 series airplanes, to require repetitive visual inspections for signs of fuel leakage of the outer wing beginning with Rib 21 and continuing outward; and corrective action, if necessary. That action was prompted by issuance of mandatory continuing airworthiness information by a foreign civil airworthiness authority. The requirements of that AD are intended to prevent fuel leakage on the outboard wing, which could result in a fuel explosion and fire.

Actions Since Issuance of Previous Rule

In the preamble to AD 98–04–06, the FAA indicated that the actions required by that AD were considered ''interim action'' and that further rulemaking action was being considered. The FAA now has determined that further rulemaking action is indeed necessary; this AD follows from that determination.

Explanation of Relevant Service Information

Dornier has issued Service Bulletin SB–328–57–255, dated January 21, 1998, which describes procedures for modification of the lower panels of the outer wing area by adding a drainhole. In case of fuel tank leakage, the drainhole is intended to indicate a fuel leak and prevent fuel accumulation. Accomplishment of the modification would eliminate the need for the repetitive inspections described in Dornier Alert Service Bulletin ASB–328–57–020, dated October 28, 1997 (referred to in the existing AD as the appropriate source of service information for accomplishment of the inspection). In addition, the effectivity of Dornier Service Bulletin SB–328–57–255 is limited to those airplanes on which the modification was not accomplished during production. Accomplishment of the actions specified in the service bulletin is intended to adequately address the identified unsafe condition. The Luftfahrt-Bundesamt (LBA), which is the airworthiness authority for Germany, classified this service bulletin as mandatory and issued German airworthiness directive 1998–218, dated May 7, 1998, in order to assure the continued airworthiness of these airplanes in Germany.

FAA's Conclusions

This airplane model is manufactured in Germany and is type certificated for operation in the United States under the provisions of section 21.29 of the Federal Aviation Regulations (14 CFR 21.29) and the applicable bilateral airworthiness agreement. Pursuant to this bilateral airworthiness agreement, the LBA has kept the FAA informed of the situation described above. The FAA has examined the findings of the LBA, reviewed all available information, and determined that AD action is necessary for products of this type design that are certificated for operation in the United States.

Explanation of Requirements of Proposed Rule

Since an unsafe condition has been identified that is likely to exist or develop on other airplanes of the same type design registered in the United States, the proposed AD would supersede AD 98–04–06 to continue to require a visual inspection for signs of fuel leakage of the outer wings beginning with Rib 21 and continuing outward. The proposed AD also would require accomplishment of the action specified in Dornier Service Bulletin SB–328–57–255, as described previously. Accomplishment of that action would terminate the currently required repetitive inspections. The proposed AD would limit the applicability to those airplanes on which the modification described previously was not accomplished during production.

Cost Impact

There are approximately 50 airplanes of U.S. registry that would be affected by this proposed AD.

The repetitive inspection that is currently required by AD 98–04–06, and retained in this AD, takes approximately 2 work hours per airplane to accomplish, at an average labor rate of $60 per work hour. Based on these figures, the cost impact of the currently required inspection on U.S. operators is estimated to be $6,000, or $120 per airplane, per inspection cycle.

The new modification that is proposed in this AD action would take approximately 7 work hours per airplane to accomplish, at an average labor rate of $60 per work hour. Based on these figures, the cost impact of the modification proposed by this AD on U.S. operators is estimated to be $21,000, or $420 per airplane.

The cost impact figures discussed above are based on assumptions that no operator has yet accomplished any of the current or proposed requirements of this AD action, and that no operator would accomplish those actions in the future if this AD were not adopted.

Regulatory Impact

The regulations proposed herein would not have substantial direct effects on the States, on the relationship between the national government and the States, or on the distribution of power and responsibilities among the various levels of government. Therefore, in accordance with Executive Order 12612, it is determined that this proposal would not have sufficient federalism implications to warrant the preparation of a Federalism Assessment.

For the reasons discussed above, I certify that this proposed regulation (1) is not a ''significant regulatory action'' under Executive Order 12866; (2) is not a ''significant rule'' under the DOT Regulatory Policies and Procedures (44 FR 11034, February 26, 1979); and (3) if promulgated, will not have a significant economic impact, positive or negative, on a substantial number of small entities under the criteria of the Regulatory Flexibility Act. A copy of the draft regulatory evaluation prepared for this action is contained in the Rules Docket. A copy of it may be obtained by contacting the Rules Docket at the location provided under the caption **ADDRESSES**.

List of Subjects in 14 CFR Part 39

Air transportation, Aircraft, Aviation safety, Safety.

The Proposed Amendment

Accordingly, pursuant to the authority delegated to me by the Administrator, the Federal Aviation Administration proposes to amend part 39 of the Federal Aviation Regulations (14 CFR part 39) as follows:

PART 39—AIRWORTHINESS DIRECTIVES

1. The authority citation for part 39 continues to read as follows:

Authority: 49 U.S.C. 106(g), 40113, 44701.

§ 39.13 [Amended]

2. Section 39.13 is amended by removing amendment 39–10319 (63 FR 6642, February 10, 1998), and by adding a new airworthiness directive (AD), to read as follows:

Dornier Luftfahrt GMBH: Docket 98–NM–173–AD. Supersedes AD 98–04–06, amendment 39–10319.

Applicability: Model 328–100 series airplanes, serial numbers 3005 through 3098 inclusive, excluding serial number 3089; certificated in any category.

Note: 1: This AD applies to each airplane identified in the preceding applicability provision, regardless of whether it has been modified, altered, or repaired in the area subject to the requirements of this AD. For airplanes that have been modified, altered, or repaired so that the performance of the requirements of this AD is affected, the owner/operator must request approval for an alternative method of compliance in accordance with paragraph (c)(1) of this AD. The request should include an assessment of the effect of the modification, alteration, or repair on the unsafe condition addressed by this AD; and, if the unsafe condition has not been eliminated, the request should include specific proposed actions to address it.

Compliance: Required as indicated, unless accomplished previously.

To prevent fuel leakage on the outboard wing, which could result in a fuel explosion and fire, accomplish the following:

Restatement of Requirements of AD 98–04–06

(a) Within 30 days after February 25, 1998 (the effective date of AD 98–04–06, amendment 39–10319), perform a visual inspection of the left- and right-hand outer wings, beginning with Rib 21 and continuing outward, for signs of fuel leakage, in accordance with Dornier Alert Service Bulletin ASB–328–57–020, dated October 28, 1997. If any sign of fuel leakage is detected, prior to further flight, re-seal the respective fuel tank in accordance with the alert service bulletin. Repeat the inspection at intervals not to exceed 1,500 flight hours or 6 months, whichever occurs first, until the actions required by paragraph (b) of this AD are accomplished.

New Requirements of this AD

(b) Within 6 months after the effective date of this AD, drill a drainhole in the lower panels of the left- and right-hand outer wings, in accordance with Dornier Service Bulletin SB–328–57–255, dated January 21, 1998. Accomplishment of the requirements of this paragraph constitutes terminating action for the repetitive inspections required by paragraph (a) of this AD.

(c)(1) An alternative method of compliance or adjustment of the compliance time that provides an acceptable level of safety may be used if approved by the Manager, International Branch, ANM–116, FAA, Transport Airplane Directorate. Operators shall submit their requests through an appropriate FAA Principal Maintenance Inspector, who may add comments and then send it to the Manager, International Branch, ANM–116.

(c)(2) Alternative methods of compliance, approved previously in accordance with AD 98–04–06, amendment 39–10319, are approved as alternative methods of compliance with this AD.

Note 2: Information concerning the existence of approved alternative methods of compliance with this AD, if any, may be obtained from the International Branch, ANM–116.

(d) Special flight permits may be issued in accordance with sections 21.197 and 21.199 of the Federal Aviation Regulations (14 CFR 21.197 and 21.199) to operate the airplane to a location where the requirements of this AD can be accomplished.

Note 3: The subject of this AD is addressed in German airworthiness directive 1998–218, dated May 7, 1998.

Issued in Renton, Washington, on August 7, 1998.

Darrell M. Pederson,

Acting Manager, Transport Airplane Directorate, Aircraft Certification Service.

[FR Doc. 98–21716 Filed 8–12–98; 8:45 am]

BILLING CODE 4910–13–P

DEPARTMENT OF TRANSPORTATION

Federal Aviation Administration

14 CFR Part 39

[Docket No. 98–NM–187–AD]

RIN 2120–AA64

Airworthiness Directives; Airbus Model A300, A310, and A300–600 Series Airplanes

AGENCY: Federal Aviation Administration, DOT.

ACTION: Notice of proposed rulemaking (NPRM).

SUMMARY: This document proposes the supersedure of an existing airworthiness directive (AD), applicable to all Airbus Model A300, A310, and A300–600 series airplanes, that currently requires performing a ram air turbine (RAT) extension test; removing and disassembling the RAT uplock mechanism; performing an inspection to detect corrosion of the RAT uplock mechanism, and replacement with a new assembly, if necessary; and cleaning all the parts of the RAT control shaft and its bearing component parts. This action would require modification of the RAT unlocking control unit, which would constitute terminating action for the repetitive tests and inspections. This action also would limit the applicability of the existing AD. This proposal is prompted by issuance of mandatory continuing airworthiness information by a foreign civil airworthiness authority. The actions specified by the proposed AD are intended to prevent corrosion of the RAT uplock pin/shaft and needle, which could result in failure of the RAT to deploy and consequent loss of emergency hydraulic power to the flight controls in the event that power is lost in both engines.

DATES: Comments must be received by September 14, 1998.

ADDRESSES: Submit comments in triplicate to the Federal Aviation Administration (FAA), Transport Airplane Directorate, ANM–114, Attention: Rules Docket No. 98–NM–187–AD, 1601 Lind Avenue, SW., Renton, Washington 98055–4056. Comments may be inspected at this location between 9:00 a.m. and 3:00 p.m., Monday through Friday, except Federal holidays.

The service information referenced in the proposed rule may be obtained from Airbus Industrie, 1 Rond Point Maurice Bellonte, 31707 Blagnac Cedex, France. This information may be examined at the FAA, Transport Airplane Directorate, 1601 Lind Avenue, SW., Renton, Washington.

FOR FURTHER INFORMATION CONTACT: Norman B. Martenson, Manager, International Branch, ANM–116, FAA, Transport Airplane Directorate, 1601 Lind Avenue, SW., Renton, Washington 98055–4056; telephone (425) 227–2110; fax (425) 227–1149.

SUPPLEMENTARY INFORMATION:

Comments Invited

Interested persons are invited to participate in the making of the proposed rule by submitting such written data, views, or arguments as they may desire. Communications shall identify the Rules Docket number and be submitted in triplicate to the address specified above. All communications received on or before the closing date for comments, specified above, will be considered before taking action on the proposed rule. The proposals contained in this notice may be changed in light of the comments received.

Comments are specifically invited on the overall regulatory, economic, environmental, and energy aspects of the proposed rule. All comments submitted will be available, both before and after the closing date for comments, in the Rules Docket for examination by interested persons. A report summarizing each FAA-public contact concerned with the substance of this proposal will be filed in the Rules Docket.

Commenters wishing the FAA to acknowledge receipt of their comments submitted in response to this notice must submit a self-addressed, stamped postcard on which the following statement is made: ''Comments to Docket Number 98-NM–187-AD.'' The postcard will be date stamped and returned to the commenter.

Availability of NPRMs

Any person may obtain a copy of this NPRM by submitting a request to the FAA, Transport Airplane Directorate, ANM–114, Attention: Rules Docket No.

98–NM–187–AD, 1601 Lind Avenue, SW., Renton, Washington 98055–4056.

Discussion

On October 20, 1997, the FAA issued AD 97–22–06, amendment 39–10177 (62 FR 55726, October 28, 1997), applicable to all Airbus Model A300, A310, and A300–600 airplanes, to require performing a ram air turbine (RAT) extension test; removing and disassembling the RAT uplock mechanism; performing an inspection to detect corrosion of the RAT uplock mechanism, and replacement with a new assembly, if necessary; and cleaning all the parts of the RAT control shaft and its bearing component parts. That action was prompted by reports indicating that the RAT did not extend during ground testing, due to corrosion in the uplock pin/shaft and the needle bearing of the RAT. The requirements of that AD are intended to detect and correct such corrosion of the RAT, which could result in failure of the RAT to deploy and consequent loss of emergency hydraulic power to the flight controls in the event that power is lost in both engines.

Issuance of New Service Information

The manufacturer has issued Airbus Service Bulletins A300–29–0109 (for Model A300 series airplanes); A310–29–2077 (for Model A310 series airplanes); and A300–29–6038 (for Model A300–600 series airplanes); all dated January 27, 1997; which describe procedures for modification of the RAT unlocking control unit, which would eliminate the need for the repetitive tests and inspections. In addition, the service bulletins limit the effectivity to those airplanes on which the modification was not accomplished during production. Accomplishment of the actions specified in the service bulletins is intended to adequately address the identified unsafe condition. The Direction Générale de l'Aviation Civile (DGAC) approved these service bulletins as optional terminating action, and issued French airworthiness directive 95–163–182(B)R3, dated May 7, 1997, in order to assure the continued airworthiness of these airplanes in France.

FAA's Conclusions

These airplane models are manufactured in France and are type certificated for operation in the United States under the provisions of section 21.29 of the Federal Aviation Regulations (14 CFR 21.29) and the applicable bilateral airworthiness agreement. Pursuant to this bilateral airworthiness agreement, the DGAC has kept the FAA informed of the situation described above. The FAA has examined the findings of the DGAC, reviewed all available information, and determined that AD action is necessary for products of this type design that are certificated for operation in the United States.

Explanation of Requirements of Proposed Rule

Since an unsafe condition has been identified that is likely to exist or develop on other airplanes of the same type design registered in the United States, the proposed AD would supersede AD 97–22–06 to continue to require performing a RAT extension test; removing and disassembling the RAT uplock mechanism; performing an inspection to detect corrosion of the RAT uplock mechanism, and replacement with a new assembly, if necessary; and cleaning all the parts of the RAT control shaft and its bearing component parts. The proposed AD would add a requirement to modify the RAT unlocking control unit, which would constitute terminating action for the repetitive test and inspection requirements. The proposed AD also would limit the applicability of the existing AD to those airplanes on which the modification was not accomplished during production. The actions would be required to be accomplished in accordance with the service bulletins described previously.

Differences Between Proposed Rule and Foreign AD

The proposed AD would differ from the parallel French airworthiness directive in that it would mandate the accomplishment of the terminating action for the repetitive tests and inspections. The French airworthiness directive provides for that action as optional.

Mandating the terminating action is based on the FAA's determination that long-term continued operational safety will be better assured by modifications or design changes to remove the source of the problem, rather than by repetitive inspections. Long-term tests and inspections may not be providing the degree of safety assurance necessary for the transport airplane fleet. This, coupled with a better understanding of the human factors associated with numerous continual inspections, has led the FAA to consider placing less emphasis on inspections and more emphasis on design improvements. The proposed modification requirement is in consonance with these conditions.

Cost Impact

There are approximately 126 Model A300, A310, and A300–600 series airplanes of U.S. registry that would be affected by this proposed AD.

The actions that are currently required by AD 97–22–06 take approximately 10 work hours per airplane to accomplish, at an average labor rate of $60 per work hour. Required parts would be provided by the manufacturer at no cost to the operators. Based on these figures, the cost impact of the currently required actions on U.S. operators is estimated to be $75,600, or $600 per airplane.

The modification that is proposed in this AD action would take approximately 9 work hours per airplane to accomplish, at an average labor rate of $60 per work hour. Required parts would cost approximately $1,972 per airplane. Based on these figures, the cost impact of the modification proposed by this AD on U.S. operators is estimated to be $316,512, or $2,512 per airplane.

The cost impact figures discussed above are based on assumptions that no operator has yet accomplished any of the current or proposed requirements of this AD action, and that no operator would accomplish those actions in the future if this AD were not adopted.

Regulatory Impact

The regulations proposed herein would not have substantial direct effects on the States, on the relationship between the national government and the States, or on the distribution of power and responsibilities among the various levels of government. Therefore, in accordance with Executive Order 12612, it is determined that this proposal would not have sufficient federalism implications to warrant the preparation of a Federalism Assessment.

For the reasons discussed above, I certify that this proposed regulation (1) is not a ''significant regulatory action'' under Executive Order 12866; (2) is not a ''significant rule'' under the DOT Regulatory Policies and Procedures (44 FR 11034, February 26, 1979); and (3) if promulgated, will not have a significant economic impact, positive or negative, on a substantial number of small entities under the criteria of the Regulatory Flexibility Act. A copy of the draft regulatory evaluation prepared for this action is contained in the Rules Docket. A copy of it may be obtained by contacting the Rules Docket at the location provided under the caption ''**ADDRESSES.**''

List of Subjects in 14 CFR Part 39

Air transportation, Aircraft, Aviation safety, Safety.

The Proposed Amendment

Accordingly, pursuant to the authority delegated to me by the Administrator, the Federal Aviation Administration proposes to amend part 39 of the Federal Aviation Regulations (14 CFR part 39) as follows:

PART 39—AIRWORTHINESS DIRECTIVES

1. The authority citation for part 39 continues to read as follows:

Authority: 49 U.S.C. 106(g), 40113, 44701.

§ 39.13 [Amended]

2. Section 39.13 is amended by removing amendment 39–10177 (62 FR 55726, October 28, 1997), and by adding a new airworthiness directive (AD), to read as follows:

Airbus Industrie: Docket 98–NM–187–AD. Supersedes AD 97–22–06, Amendment 39–10177.

Applicability: Model A300, A310, and A300–600 series airplanes on which Airbus Modification 11527 has not been accomplished; certificated in any category.

Note 1: This AD applies to each airplane identified in the preceding applicability provision, regardless of whether it has been otherwise modified, altered, or repaired in the area subject to the requirements of this AD. For airplanes that have been modified, altered, or repaired so that the performance of the requirements of this AD is affected, the owner/operator must request approval for an alternative method of compliance in accordance with paragraph (d) of this AD. The request should include an assessment of the effect of the modification, alteration, or repair on the unsafe condition addressed by this AD; and, if the unsafe condition has not been eliminated, the request should include specific proposed actions to address it.

Compliance: Required as indicated, unless accomplished previously.

To prevent corrosion of the ram air turbine (RAT) uplock pin/shaft and needle, which could result in failure of the RAT to deploy and consequent loss of emergency hydraulic power to the flight controls in the event that power is lost in both engines, accomplish the following:

Restatement of the Requirements of AD 97–22–06

(a) Within 30 months since the date of manufacture, or within 3 months after December 2, 1997 (the effective date of AD 97–22–06, amendment 39–10177), whichever occurs later: Accomplish the requirements of paragraphs (a)(1) and (a)(2) of this AD in accordance with Airbus Service Bulletin A300–29–0108, dated April 1, 1996 (for Model A300 series airplanes); A310–29–2076, dated April 1, 1996 (for Model A310 series airplanes); or A300–29–6037, dated April 1, 1996 (for Model A300–600 series airplanes); as applicable. Thereafter, repeat these actions at intervals not to exceed 30 months.

(1) Perform a RAT extension test on the ground, in accordance with the procedures specified in the Maintenance Manual.

(2) Disassemble and remove the uplock mechanism of the RAT and perform a visual inspection of the uplock mechanism to detect corrosion, in accordance with the applicable service bulletin.

Note 2: For the purposes of this AD, the RAT uplock mechanism includes both the lever assembly and uplock unit.

(i) If no corrosion is detected: Prior to further flight, clean and lubricate the uplock mechanism and its associated parts, reinstall the assembly, and perform a retraction/extension/retraction of the RAT, in accordance with the applicable service bulletin.

(ii) If any corrosion is detected in any part of the uplock mechanism, prior to further flight, accomplish either paragraph (a)(2)(ii)(A) or (a)(2)(ii)(B) of this AD in accordance with the applicable service bulletin.

(A) Replace the uplock mechanism with a new part and perform a retraction/extension/retraction of the RAT, in accordance with the applicable service bulletin. Or

(B) Clean and lubricate the uplock mechanism and its associated parts. Within 30 days following accomplishment of this cleaning and lubrication, replace the uplock mechanism with a new part and perform a retraction/extension/retraction of the RAT.

(b) Initial accomplishment of the actions required by paragraph (a) of this AD that have been performed in accordance with Airbus All Operator Telex 29–16, Revision 01, dated January 10, 1996, is considered acceptable for compliance with the initial RAT extension test and an initial visual inspection as required by paragraph (a) of this AD. However, the first repetitive inspection, as required by paragraph (a) of this AD, must be performed within 30 months after that RAT extension test and visual inspection were conducted, and repeated thereafter at intervals not to exceed 30 months.

New Requirements of this AD

(c) Within 30 months after the effective date of this AD, modify the RAT unlocking control unit in accordance with Airbus Service Bulletin A300–29–0109 (for Model A300 series airplanes); A310–29–2077 (for Model A310 series airplanes); or A300–29–6038 (for Model A300–600 series airplanes); all dated January 27, 1997; as applicable. Accomplishment of this modification constitutes terminating action for the repetitive test and inspection requirements of this AD.

(d) An alternative method of compliance or adjustment of the compliance time that provides an acceptable level of safety may be used if approved by the Manager, International Branch, ANM–116, FAA, Transport Airplane Directorate. Operators shall submit their requests through an appropriate FAA Principal Maintenance Inspector, who may add comments and then send it to the Manager, International Branch, ANM–116.

Note 3: Information concerning the existence of approved alternative methods of compliance with this AD, if any, may be obtained from the International Branch, ANM–116.

(e) Special flight permits may be issued in accordance with sections 21.197 and 21.199 of the Federal Aviation Regulations (14 CFR 21.197 and 21.199) to operate the airplane to a location where the requirements of this AD can be accomplished.

Note 4: The subject of this AD is addressed in French airworthiness directive 95–163–182(B)R3, dated May 7, 1997.

Issued in Renton, Washington, on August 7, 1998.

Darrell M. Pederson,

Acting Manager, Transport Airplane Directorate, Aircraft Certification Service.

[FR Doc. 98–21715 Filed 8–12–98; 8:45 am]

BILLING CODE CODE 4910–13–P

DEPARTMENT OF TRANSPORTATION

Federal Aviation Administration

14 CFR Part 39

[Docket No. 98–NM–235–AD]

RIN 2120–AA64

Airworthiness Directives; British Aerospace Model Avro 146–RJ85A and RJ100A Series Airplanes

AGENCY: Federal Aviation Administration, DOT.

ACTION: Notice of proposed rulemaking (NPRM).

SUMMARY: This document proposes the adoption of a new airworthiness directive (AD) that is applicable to certain British Aerospace Model Avro 146–RJ85A and RJ100A series airplanes. This proposal would require a one-time inspection for evidence of machining (undercutting) into the web of the integral stringers of the bottom skin of the wings, and corrective actions, if necessary. This proposal is prompted by issuance of mandatory continuing airworthiness information by a foreign civil airworthiness authority. The actions specified by the proposed AD are intended to prevent reduced wing strength and stiffness, and the onset of premature fatigue cracking, which could result in reduced structural integrity of the airplane.

DATES: Comments must be received by September 14, 1998.

ADDRESSES: Submit comments in triplicate to the Federal Aviation Administration (FAA), Transport Airplane Directorate, ANM–114, Attention: Rules Docket No. 98–NM–235–AD, 1601 Lind Avenue, SW., Renton, Washington 98055–4056. Comments may be inspected at this location between 9:00 a.m. and 3:00 p.m., Monday through Friday, except Federal holidays.

The service information referenced in the proposed rule may be obtained from AI(R) American Support, Inc., 13850 Mclearen Road, Herndon, Virginia 20171. This information may be examined at the FAA, Transport Airplane Directorate, 1601 Lind Avenue, SW., Renton, Washington.

FOR FURTHER INFORMATION CONTACT: Norman B. Martenson, Manager, International Branch, ANM–116, FAA, Transport Airplane Directorate, 1601 Lind Avenue, SW., Renton, Washington 98055–4056; telephone (425) 227–2110; fax (425) 227–1149.

SUPPLEMENTARY INFORMATION:

Comments Invited

Interested persons are invited to participate in the making of the proposed rule by submitting such written data, views, or arguments as they may desire. Communications shall identify the Rules Docket number and be submitted in triplicate to the address specified above. All communications received on or before the closing date for comments, specified above, will be considered before taking action on the proposed rule. The proposals contained in this notice may be changed in light of the comments received.

Comments are specifically invited on the overall regulatory, economic, environmental, and energy aspects of the proposed rule. All comments submitted will be available, both before and after the closing date for comments, in the Rules Docket for examination by interested persons. A report summarizing each FAA-public contact concerned with the substance of this proposal will be filed in the Rules Docket.

Commenters wishing the FAA to acknowledge receipt of their comments submitted in response to this notice must submit a self-addressed, stamped postcard on which the following statement is made: ''Comments to Docket Number 98–NM–235–AD.'' The postcard will be date stamped and returned to the commenter.

Availability of NPRMs

Any person may obtain a copy of this NPRM by submitting a request to the FAA, Transport Airplane Directorate, ANM–114, Attention: Rules Docket No. 98–NM–235–AD, 1601 Lind Avenue, SW., Renton, Washington 98055–4056.

Discussion

The Civil Aviation Authority (CAA), which is the airworthiness authority for the United Kingdom, notified the FAA that an unsafe condition may exist on certain British Aerospace Model Avro 146–RJ85A and RJ100A series airplanes. The CAA advises that, during the production of certain airplanes, the web of the integral stringers of the bottom skin of the wings may have been produced with unnecessary undercuts. These unnecessary undercuts may have undersized all the webs of the integral stringers between ribs 2 to 18. This condition, if not corrected, could result in reduced wing strength and stiffness, and the onset of premature fatigue cracking, which could result in reduced structural integrity of the airplane.

Explanation of Relevant Service Information

The manufacturer has issued British Aerospace Service Bulletin SB.57–55, dated April 27, 1998, which describes procedures for a one-time detailed visual inspection for evidence of machining (undercutting) into the web of the integral stringers, between ribs 2 and 18, of the bottom skin of the wings, and corrective actions, if necessary. The corrective actions include measuring the web of the integral stringers if any machining (undercutting) is detected, and repair, if necessary. Accomplishment of the action specified in the service bulletin is intended to adequately address the identified unsafe condition. The CAA classified this service bulletin as mandatory to assure the continued airworthiness of these airplanes in the United Kingdom.

FAA's Conclusions

This airplane model is manufactured in the United Kingdom and is type certificated for operation in the United States under the provisions of section 21.29 of the Federal Aviation Regulations (14 CFR 21.29) and the applicable bilateral airworthiness agreement. Pursuant to this bilateral airworthiness agreement, the CAA has kept the FAA informed of the situation described above. The FAA has examined the findings of the CAA, reviewed all available information, and determined that AD action is necessary for products of this type design that are certificated for operation in the United States.

Explanation of Requirements of Proposed Rule

Since an unsafe condition has been identified that is likely to exist or develop on other airplanes of the same type design registered in the United States, the proposed AD would require accomplishment of the actions specified in the service bulletin described previously, except as described below.

Differences Between Proposed Rule and Service Bulletin

Operators should note that, although the service bulletin specifies that the manufacturer may be contacted for disposition of certain machining (undercutting) conditions, this proposal would require the repair of those conditions to be accomplished in accordance with a method approved by either the FAA, or the CAA (or its delegated agent). In light of the type of repair that would be required to address the identified unsafe condition, and in consonance with existing bilateral airworthiness agreements, the FAA has determined that, for this proposed AD, a repair approved by either the FAA or the CAA would be acceptable for compliance with this proposed AD.

Cost Impact

The FAA estimates that 5 airplanes of U.S. registry would be affected by this proposed AD, that it would take approximately 16 work hours per airplane to accomplish the proposed inspection, and that the average labor rate is $60 per work hour. Based on these figures, the cost impact of the proposed AD on U.S. operators is estimated to be $4,800, or $960 per airplane.

The cost impact figure discussed above is based on assumptions that no operator has yet accomplished any of the proposed requirements of this AD action, and that no operator would accomplish those actions in the future if this AD were not adopted.

Regulatory Impact

The regulations proposed herein would not have substantial direct effects on the States, on the relationship between the national government and the States, or on the distribution of power and responsibilities among the various levels of government. Therefore, in accordance with Executive Order 12612, it is determined that this proposal would not have sufficient federalism implications to warrant the preparation of a Federalism Assessment.

For the reasons discussed above, I certify that this proposed regulation (1) is not a ''significant regulatory action'' under Executive Order 12866; (2) is not

a ''significant rule'' under the DOT Regulatory Policies and Procedures (44 FR 11034, February 26, 1979); and (3) if promulgated, will not have a significant economic impact, positive or negative, on a substantial number of small entities under the criteria of the Regulatory Flexibility Act. A copy of the draft regulatory evaluation prepared for this action is contained in the Rules Docket. A copy of it may be obtained by contacting the Rules Docket at the location provided under the caption **ADDRESSES.**

List of Subjects in 14 CFR Part 39

Air transportation, Aircraft, Aviation safety, Safety.

The Proposed Amendment

Accordingly, pursuant to the authority delegated to me by the Administrator, the Federal Aviation Administration proposes to amend part 39 of the Federal Aviation Regulations (14 CFR part 39) as follows:

PART 39—AIRWORTHINESS DIRECTIVES

1. The authority citation for part 39 continues to read as follows:

Authority: 49 U.S.C. 106(g), 40113, 44701.

§ 39.13 [Amended]

2. Section 39.13 is amended by adding the following new airworthiness directive:

British Aerospace Regional Aircraft (Formerly British Aerospace Regional Aircraft Limited, Avro International Aerospace Division; British Aerospace, PLC; British Aerospace Commercial Aircraft Limited): Docket 98–NM–235–AD.

Applicability: Model Avro 146–RJ85A and RJ100A series airplanes, as listed in British Aerospace Service Bulletin SB.57–55, dated April 27, 1998, certificated in any category.

Note 1: This AD applies to each airplane identified in the preceding applicability provision, regardless of whether it has been modified, altered, or repaired in the area subject to the requirements of this AD. For airplanes that have been modified, altered, or repaired so that the performance of the requirements of this AD is affected, the owner/operator must request approval for an alternative method of compliance in accordance with paragraph (b) of this AD. The request should include an assessment of the effect of the modification, alteration, or repair on the unsafe condition addressed by this AD; and, if the unsafe condition has not been eliminated, the request should include specific proposed actions to address it.

Compliance: Required as indicated, unless accomplished previously.

To prevent reduced wing strength and stiffness, and the onset of premature fatigue cracking, which could result in reduced structural integrity of the airplane, accomplish the following:

(a) Within 6 months after the effective date of this AD, perform a one-time detailed visual inspection for evidence of machining (undercutting) into the web of the integral stringers of the bottom skin of the wings, in accordance with British Aerospace Service Bulletin SB.57–55, dated April 27, 1998.

(1) If no machining into the web is detected, no further action is required by this AD.

(2) If any machining into the web is detected, prior to further flight, measure the thickness of the web of the integral stringer in accordance with the service bulletin.

(i) If the web thickness is 0.099 inch or more, no further action is required by this AD.

(ii) If the web thickness is less than 0.099 inch, prior to further flight, repair in accordance with a method approved by either the Manager, International Branch, ANM–116, FAA, Transport Directorate, or the Civil Aviation Authority (or its delegated agent).

(b) An alternative method of compliance or adjustment of the compliance time that provides an acceptable level of safety may be used if approved by the Manager, International Branch, ANM–116. Operators shall submit their requests through an appropriate FAA Principal Maintenance Inspector, who may add comments and then send it to the Manager, International Branch, ANM–116.

Note 2: Information concerning the existence of approved alternative methods of compliance with this AD, if any, may be obtained from the International Branch, ANM–116.

(c) Special flight permits may be issued in accordance with sections 21.197 and 21.199 of the Federal Aviation Regulations (14 CFR 21.197 and 21.199) to operate the airplane to a location where the requirements of this AD can be accomplished.

Issued in Renton, Washington, on August 7, 1998.

Darrell M. Pederson,

Acting Manager, Transport Airplane Directorate, Aircraft Certification Service.

[FR Doc. 98–21714 Filed 8–12–98; 8:45 am]

BILLING CODE CODE 4910–13–U

DEPARTMENT OF THE TREASURY

Internal Revenue Service

26 CFR Part 1

[REG–251698–96]

RIN 1545–AU77

S Corporation Subsidiaries; Hearing

AGENCY: Internal Revenue Service, Treasury.

ACTION: Notice of public hearing on proposed regulations.

SUMMARY: This document provides notice of a public hearing on proposed regulations relating to the treatment of corporate subsidiaries of S corporations. In addition, this document announces that persons wishing to testify who are outside the Washington, DC area, will be able to make their presentations from one of two Internal Revenue Service remote teleconference sites.

DATES: The public hearing will be held on Wednesday, September 9, 1998, beginning at 1:00 p.m. (EDT). Requests to speak and outlines of oral comments must be received by Wednesday, August 20, 1998.

ADDRESSES: The public hearing will be held in room 3411, Internal Revenue Building, 1111 Constitution Avenue, NW, Washington, DC. The addresses of the remote teleconference sites are listed below under Supplementary Information.

FOR FURTHER INFORMATION CONTACT: Mike Slaughter of the Regulations Unit, Assistant Chief Counsel (Corporate), (202) 622–7180 (not a toll-free number).

SUPPLEMENTARY INFORMATION: The subject of the public hearing is proposed regulations under section 1308 of the Internal Revenue Code. These proposed regulations appeared in the **Federal Register** (63 FR 19864) on Wednesday, April 22, 1998.

The hearing will be held in room 3411 of the Internal Revenue Building, 1111 Constitution Avenue, NW. Washington, DC, and in two teleconference sites listed below:

Federal Building, 5th Floor, Room 5003, 300 N. Los Angeles Street, Los Angeles, California

Robert A. Young Building, 2nd Floor, Conference Room, 1222 Spruce Street, St. Louis, MO 63103

The rules of § 601.601 (a)(3) of the ''Statement of Procedural Rules'' (26 CFR part 601) shall apply with respect to the public hearing. Persons who have submitted written comments within the time prescribed in the notice of proposed rulemaking and who also desire to present oral comments at the hearing on the proposed regulations should submit not later than Wednesday, August 20, 1998, an outline of the oral comments/testimony to be presented at the hearing and the time they wish to devote to each subject.

Each speaker (or group of speakers representing a single entity) will be limited to 10 minutes for an oral presentation exclusive of the time consumed by the question from the panel for the government and answers to these questions.

Because of controlled access restriction, attendees cannot be admitted beyond the lobby of the

Internal Revenue building until 12:30 p.m. Hearing times at the remote teleconference sites will be concurrent with the hearing in Washington, DC. (i.e., 10 a.m. PDT and 12 noon CDT)

Due to limited seating capacity at the remote teleconference sites, no more than 12 people may be accommodated at any one time in each teleconference room. Seating in the teleconference rooms will be made available based on the order of presentations. IRS personnel will be available at the remote teleconference sites to assist speakers in using the teleconference equipment.

The Service will prepare an agenda showing the scheduling of speakers and will make copies of the agenda available free of charge at the hearing. Testimony will begin with the speakers at the remote teleconference sites in the following order: Los Angeles, St. Louis, and will conclude with presentations by the speakers in Washington, DC.

Cynthia E. Grigsby,

Chief, Regulations Unit, Assistant Chief Counsel (Corporate).

[FR Doc. 98–21638 Filed 8–12–98; 8:45 am]

BILLING CODE CODE 8430–01–P

DEPARTMENT OF THE TREASURY

Internal Revenue Service

26 CFR Parts 1 and 301

[REG–209813–96]

RIN 1545–AU15

Reporting Requirements for Widely Held Fixed Investment Trusts

AGENCY: Internal Revenue Service (IRS), Treasury.

ACTION: Notice of proposed rulemaking and notice of public hearing.

SUMMARY: This document contains proposed regulations that define widely held fixed investment trusts, clarify the reporting obligations of the trustees of these trusts and the middlemen connected with these trusts, and provide for the communication of necessary tax information to beneficial owners of trust interests. This document also provides notice of a public hearing on these proposed regulations.

DATES: Written comments must be received by November 12, 1998. Requests to speak (with outlines of oral comments) at a public hearing scheduled for Thursday, November 5, 1998 at 10 a.m. must be submitted by October 15, 1998.

ADDRESSES: Send submissions to: CC:DOM:CORP:R (REG–209813–96), room 5228, Internal Revenue Service, POB 7604, Ben Franklin Station, Washington, DC 20044. In the alternative, submissions may be hand delivered between the hours of 8 a.m. and 5 p.m. to: CC:DOM:CORP:R (REG–209813–96), Courier's Desk, Internal Revenue Building, 1111 Constitution Avenue, NW., Washington, DC. Alternatively, taxpayers may submit comments electronically via the Internet by selecting the ''Tax Regs'' option on the IRS Home Page, or by submitting comments directly to the IRS Internet site at http://www.irs.ustreas.gov/prod/tax__regs/comments.html. The public hearing will be held in room 2615, Internal Revenue Building, 1111 Constitution Avenue, NW., Washington, DC.

FOR FURTHER INFORMATION CONTACT: Concerning the regulations, Faith Colson, (202) 622–3060; concerning submissions and the hearing, LaNita Van Dyke, (202) 622–7180 (not toll-free numbers).

SUPPLEMENTARY INFORMATION:

Paperwork Reduction Act

The collection of information contained in this notice of proposed rulemaking has been submitted to the Office of Management and Budget for review in accordance with the Paperwork Reduction Act of 1995 (44 U.S.C. 3507(d)). Comments on the collection of information should be sent to the Office of Management and Budget, Attn: Desk Officer for the Department of Treasury, Office of Information and Regulatory Affairs, Washington, DC 20503, with copies to the Internal Revenue Service, Attn: IRS Reports Clearance Officer, OP:FS:FP, Washington, DC 20224. Comments on the collection of information should be received by October 13, 1998. Comments are specifically requested concerning:

Whether the proposed collection of information is necessary for the proper performance of the functions of the Internal Revenue Service, including whether the information will have practical utility;

The accuracy of the estimated burden associated with the proposed collection of information (see below);

How the quality, utility, and clarity of the information to be collected may be enhanced;

How the burden of complying with the proposed collection of information may be minimized, including through the application of automated collection techniques or other forms of information technology; and

Estimates of capital or start-up costs and costs of operation, maintenance, and purchase of service to provide information.

The collection of information in these proposed regulations is in § 1.671–4 of the Income Tax Regulations. This information is required to enable holders of trust interests to report items of income, deduction, and credit of a widely held fixed investment trust under section 671. This information will be used by the IRS to ensure that those items are reported accurately by beneficial owners of trust interests. The collection of information is mandatory. The likely respondents are businesses and other for-profit institutions.

Estimated total annual reporting burden: 2,400 hours.

Estimated average annual burden hours per respondent: 2 hours.

Estimated number of respondents: 1,200.

Estimated annual frequency of responses: Annually (but more often for a trust providing information to certain persons on request).

An agency may not conduct or sponsor, and a person is not required to respond to, a collection of information unless it displays a valid control number assigned by the Office of Management and Budget.

Books or records relating to the collection of information must be retained as long as their contents may become material in the administration of any internal revenue law. Generally, tax returns and tax return information are confidential, as required by 26 U.S.C. 6103.

Background

This document contains proposed amendments to the Income Tax Regulations (26 CFR part 1) under section 671. The proposed amendments are to be issued under the authority of sections 671, 6034A, 6049(d)(7), and 7805.

A fixed investment trust is an arrangement classified as a trust under § 301.7701–4(c). Beneficial interests in these trusts are divided into units. The Service treats these trusts as grantor trusts under section 671 and the owners of the beneficial interests, or units, as the grantors. See Rev. Rul. 84–10 (1984–1 C.B. 155); Rev. Rul. 70–545 (1970–2 C.B. 7); Rev. Rul. 70–544 (1970–2 C.B. 6); Rev. Rul. 61–175 (1961–2 C.B. 128). Under the proposed regulations, a *widely held fixed investment trust* is a fixed investment trust in which any interest is held by a middleman. For this purpose, the term *middleman* includes, but is not limited to, a custodian of a person's account, a nominee, and a broker holding an interest for a customer in street name. The IRS and

Treasury request comments on the application and scope of these definitions, including the appropriateness of a de minimis rule as to the number of middlemen.

Interests in widely held fixed investment trusts are often held in the street name of a middleman, who holds such interests on behalf of the beneficial owners. Thus, trustees frequently do not know the identity of the beneficial owners and are not in a position to communicate necessary tax information directly to such owners. Currently, there are no tax information reporting rules specifically providing for the sharing of tax information among trustees, middlemen, and beneficial owners of these trusts.

On December 21, 1995, final regulations (TD 8633) under section 671, relating to the information reporting requirements of grantor trusts, were published in the **Federal Register** (60 FR 66085). See § 1.671–4. While drafting the final regulations, the IRS and Treasury concluded that special reporting requirements were needed for widely held fixed investment trusts but that such guidance fell outside the scope of the final regulations. The preamble to the final regulations stated that the IRS and Treasury anticipated providing guidance for these trusts in a separate project and invited comments from interested taxpayers and practitioners regarding such guidance.

In developing these proposed regulations, the IRS and Treasury have continued to solicit comments from the public. Comments were received from various industry members and practitioners, and these proposed regulations take such comments into account. The proposed regulations are intended to clarify the reporting requirements of trustees and middlemen and to ensure that beneficial owners of trust interests receive accurate and timely tax reporting information. The IRS and Treasury welcome comments on specific instances of industry practice that differ significantly from the framework of these proposed regulations and on suggestions to tailor the reporting requirements to account for those differences.

Explanation of Provisions

A. General Framework of Reporting Rules

The information reporting framework in the proposed regulations is similar to that for regular interests in a real estate mortgage investment conduit. See § 1.6049–7.

Under the proposed regulations, the responsibility for information reporting lies primarily with the person in the ownership chain who holds a unit interest for a beneficial owner and is, therefore, in the best position to communicate with, and provide tax information to, the beneficial owner. Thus, a brokerage firm that holds a unit interest directly for an individual as a middleman will have the primary obligation to report to the IRS and to provide tax information to the individual. Similarly, if a unit interest is held directly by an individual and not through a middleman, the trustee is to report to the IRS and to provide tax information to the individual. Information reporting generally is not required for interests held by *exempt recipients*. Middlemen and trustees, however, are to make trust tax information available upon request to exempt recipients.

Appropriate adjustments may be necessary to other information reporting rules to make them compatible with these proposed regulations.

B. Trustee or Middleman to Report To the IRS on Form 1099

Under proposed § 1.671–4(j)(2)(i)(A), a trustee must report to the IRS, on the appropriate Forms 1099, the gross amount of trust income (determined in accordance with proposed § 1.671–4(j)(6)(i)) attributable to a unit interest holder who holds an interest in the trust directly and not through a middleman. Similarly, under proposed § 1.671–4(j)(2)(i)(B), a middleman must report for any unit interest holder on whose behalf or account the middleman holds an interest. (To comply with this requirement, middlemen may request the necessary tax information from the trustee. See the discussion below.) In addition, the trustee or middleman is to report on the appropriate Form 1099 the gross proceeds from the sale or other disposition of a trust asset that is attributable to the unit interest holder. Forms 1099 are not required for any unit interest holder who is an *exempt recipient*, as defined in proposed § 1.671–4(j)(1).

C. Statements To Be Furnished to the Beneficial Owners of Unit Interests

Every middleman or trustee required to file with the IRS a Form 1099 under these proposed regulations for a unit interest holder must furnish to the unit interest holder a written statement providing the holder with necessary tax reporting information including: (1) the items of income (determined in accordance with proposed § 1.671–4(j)(6)(i)), deduction, and credit of the trust attributable to the unit interest holder; (2) if any trust asset has been sold or otherwise disposed of during the calendar year, the portion of the gross proceeds relating to the trust asset which is attributable to the unit interest holder, the date of sale or disposition of the trust asset, and the percentage of that trust asset that has been sold or disposed of; and (3) any other information necessary for the unit interest holder to accurately report the income, deductions, and credits of the trust attributable to the unit interest as required under section 671.

In addition, to enable unit interest holders to calculate gain or loss on the disposition of a trust asset, if a trust sells or disposes of a trust asset during a particular calendar year, the proposed regulations require the trustee or middleman to include, with the statement to the holder, a schedule showing the portion (expressed as a percentage) of the total fair market value of all the assets held by the trust that the trust asset sold or disposed of represented as of the last day of each quarter that the asset was held by the trust. It is contemplated that, in the absence of more accurate information, this information may be used by the unit interest holder to determine the percentage of the holder's basis in its unit interest that the disposed asset represents, so that the holder may calculate its gain or loss on the disposition of the asset.

The IRS and Treasury welcome comments on whether the approach taken in the proposed regulations to communicate information to enable the holder of a unit interest to calculate its basis in a trust asset is effective, or whether a different approach, which continues to be consistent with the taxation of grantor trusts, would be more effective. In addition, the IRS and Treasury invite comments on whether, for trusts consisting of fungible assets, an approach other than the proposed asset-by-asset approach for reporting sales and determining basis is administratively feasible or whether an aggregate approach would be more appropriate and on the manner in which such an aggregate approach would be applied.

D. Information to be Furnished to Middlemen by Trusts

In general, information reporting is not required for unit interests held by *exempt recipients*. To enable such persons to receive necessary trust information, however, § 1.671–4(j)(3)(iii) of the proposed regulations provides that middlemen, exempt recipients, and certain other persons may request from the trust tax information for a calendar quarter, computed as of the last day of

the quarter specified, or for a calendar year, computed as of December 31 of the year specified. The tax reporting information the trust is to make available includes: (1) all items of income (determined in accordance with proposed § 1.671–4(j)(6)(i)), deduction, and credit of the trust for the period specified; (2) if any trust asset has been sold or otherwise disposed of during the period specified, the gross proceeds received by the trust for the trust asset, the date of sale or disposition, and the percentage of that trust asset that has been sold or disposed of; (3) the number of units outstanding on the last business day of the period specified; and (4) any other information necessary for the unit interest holder to accurately report the income, deductions, and credits attributable to the portion of the trust treated as owned by the holder, as required under section 671. In addition, if a trust asset is sold or otherwise disposed of during the period specified, the trust must provide a schedule showing the portion (expressed in terms of a percentage) of the total fair market value of all the assets held by the trust that the asset sold or disposed of represented as of the last day of each calendar quarter that the trust held the asset.

E. Special Rules

A beneficial owner of a unit interest must report trust items consistent with the owner's method of accounting. See, e.g., Rev. Rul. 84–10. For administrative convenience, and with the intent of being consistent with industry practice, however, the proposed regulations require a trust to provide tax information as if the trust were a taxpayer using the cash receipts and disbursements method of tax accounting (cash method). Although a trust must provide tax information to unit holders as if the trust were a cash method taxpayer, the trust must provide information necessary for such holders to comply with the original issue discount rules and other provisions requiring the inclusion of accrued amounts regardless of the holder's method of accounting. The IRS and Treasury are continuing to study, and welcome comments on, whether to require trusts to provide tax reporting information to accommodate the different methods of accounting used by the beneficial owners of a trust.

In the case of a widely held fixed investment trust that holds a pool of debt instruments subject to section 1272(a)(6)(C)(iii), the proposed regulations require that middlemen, unit interest holders, exempt recipients, and noncalendar-year taxpayers be provided with certain additional information that is necessary for compliance with the market discount rules and, where applicable, section 1272(a)(6) (as amended by section 1004 of the Taxpayer Relief Act of 1997, Public Law 105–34, 111 Stat. 788, 911 (1997)). This additional information includes information necessary to compute (1) the accrual of market discount, including the type of information required under § 1.6049–7(f)(2)(i)(G) in the case of a REMIC regular interest or a collateralized debt obligation not issued with original issue discount; and (2) the accrual of original issue discount and market discount, including the type of information required under § 1.6049–7(f)(2)(ii)(E), (F), (I), and (K) in the case of a REMIC regular interest or a collateralized debt obligation that is issued with original issue discount. The IRS and Treasury request comments on whether similar information reporting requirements, for example, reporting of information necessary to compute the accrual of market discount, should be extended to widely held fixed investment trusts that hold instruments (or pools of instruments) not subject to section 1272(a)(6)(C).

To enable a beneficial owner to comply fully with section 671 and section 67 (where applicable), § 1.671–4(j)(6)(i) of the proposed regulations requires the amount of trust income to be reported by the trustee to be the gross amount of income generated by the trust assets (other than from the sale or other disposition of trust assets). Thus, in the case of a trust that receives a payment net of an expense, the payment must be grossed up to reflect the deducted expense. Trustees must also have, and make available, information regarding the trust's affected expenses (as defined in § 1.67–2T(i)(1)) for the calendar year. In addition, in the case of a unit interest holder that is an affected investor (as defined in § 1.67–2T(h)(1)), the trustee or middleman must provide such unit interest holder with information regarding the holder's proportionate share of the trust's affected expenses for the calendar year.

The proposed regulations also require the trust to separately state any other item that, if taken into account separately by any unit interest holder, could result in an income tax liability for that unit interest holder different from that which would result if the unit interest holder did not take the item into account separately. The IRS and Treasury request comments on whether this requirement is administratively feasible in the context of a widely held fixed investment trust or whether a different approach, also consistent with the taxation of grantor trusts, would be more appropriate.

F. Coordination With Backup Withholding Rules

Section 1.671–4(j)(7) of the proposed regulations contains provisions to coordinate these regulations with the backup withholding rules.

Proposed Effective Date

These regulations are proposed to apply to calendar years beginning on or after the date that final regulations are published in the **Federal Register**.

Special Analyses

It has been determined that this notice of proposed rulemaking is not a significant regulatory action as defined in EO 12866. Therefore, a regulatory assessment is not required. It is hereby certified that these regulations will not have a significant economic impact on a substantial number of small entities. This certification is based on the fact that the regulations generally clarify existing reporting obligations and are expected, for the most part, to have a minimal impact on industry practice. Thus, the regulations will not result in a significant economic impact on any entity subject to the regulations. Further, the reporting burdens in these regulations will fall primarily on large brokerage firms, large banks, and other large entities acting as trustees or middlemen, most of which are not small entities within the meaning of the Regulatory Flexibility Act (5 U.S.C. chapter 6). Thus, a substantial number of small entities will not be affected. Therefore, a Regulatory Flexibility Analysis under the Regulatory Flexibility Act (5 U.S.C. chapter 6) is not required. Pursuant to section 7805(f) of the Internal Revenue Code, this notice of proposed rulemaking will be submitted to the Chief Counsel for Advocacy of the Small Business Administration for comment on its impact on small business.

Comments and Public Hearing

Before these proposed regulations are adopted as final regulations, consideration will be given to any written comments (a signed original and eight (8) copies) that are submitted timely (in the manner described in the **ADDRESSES** caption) to the IRS. All comments will be available for public inspection and copying.

A public hearing has been scheduled for Thursday, November 5, 1998 at 10 a.m., in room 2615, Internal Revenue Building, 1111 Constitution Avenue, NW., Washington, DC. Because of access

restrictions, visitors will not be admitted beyond the Internal Revenue Building lobby more than 15 minutes before the hearing starts.

The rules of 26 CFR 601.601(a)(3) apply to the hearing.

Persons that wish to present oral comments at the hearing must submit written comments by November 12, 1998 and submit an outline of the topics to be discussed and the time to be devoted to each topic (signed original and eight (8) copies) by October 15, 1998.

A period of 10 minutes will be allotted to each person for making comments.

An agenda showing the scheduling of the speakers will be prepared after the deadline for receiving outlines has passed. Copies of the agenda will be available free of charge at the hearing.

Drafting Information. The principal author of these regulations is Faith Colson, Office of Assistant Chief Counsel (Passthroughs and Special Industries). However, other personnel from the IRS and Treasury Department participated in their development.

List of Subjects

26 CFR Part 1

Income taxes, Reporting and recordkeeping requirements

26 CFR Part 301

Employment taxes, Estate taxes, Excise taxes, Gift taxes, Income taxes, Penalties, Reporting and recordkeeping requirements

Proposed Amendments to the Regulations

Accordingly, 26 CFR parts 1 and 301 are proposed to be amended as follows:

PART 1—INCOME TAXES

Paragraph 1. The authority citation for part 1 is amended by adding an entry in numerical order to read as follows:

Authority: 26 U.S.C. 7805 * * *

Section 1.671–4 also issued under 26 U.S.C. 671, 26 U.S.C. 6034A, and 26 U.S.C. 6049(d)(7).

Par. 2. Section 1.671–4 is amended by revising paragraph (a) and adding paragraph (j) to read as follows:

§ 1.671–4 Method of reporting.

(a) *Portion of trust treated as owned by the grantor or another person.* Except as otherwise provided in paragraphs (b) and (j) of this section, items of income, deduction, and credit attributable to any portion of a trust which, under the provisions of subpart E (section 671 and following), part I, subchapter J, chapter 1 of the Internal Revenue Code, is treated as owned by the grantor or another person are not reported by the trust on Form 1041, but are shown on a separate statement to be attached to that form. Paragraph (j) of this section provides special reporting rules for widely held fixed investment trusts. Section 301.7701–4(e)(2) of this chapter provides guidance on how the reporting rules in this paragraph (a) apply to an environmental remediation trust.

* * * * *

(j) *Special rules applicable to widely held fixed investment trusts.* The reporting rules contained in this paragraph (j) apply to any widely held fixed investment trust.

(1) *Definitions.* For purposes of this paragraph (j):

Affected expenses. The term *affected expenses* has the meaning given that term by § 1.67–2T(i)(1).

Affected investor. The term *affected investor* has the meaning given that term by § 1.67–2T(h)(1).

Exempt recipient. An *exempt recipient* is any person described in paragraphs (j)(2)(iv)(A) through (R) of this section.

Middleman. A *middleman* is any person who holds an interest in an arrangement classified as a trust under § 301.7701–4(c) of this chapter, and subject to subpart E, part I, subchapter J, chapter 1 of the Internal Revenue Code, on behalf of, or for the account of, another person, or who otherwise acts in a capacity as an intermediary for the account of another person, at any time during the calendar year. A middleman includes, but is not limited to—

(i) A custodian of a person's account, such as a bank, financial institution, or brokerage firm acting as custodian of an account;

(ii) A nominee, including the joint owner of an account or instrument except if the joint owners are husband and wife; and

(iii) A broker (as defined in section 6045(c)(1) and § 1.6045–1(a)(1)) holding an interest for a customer in street name.

Requesting person. A *requesting person* is a person specified in paragraph (j)(3)(iii)(A) of this section who is entitled to request from the trustee the information specified in paragraph (j)(3)(ii) of this section.

Trustee. Trustee means the trustee of a widely held fixed investment trust.

Unit interest holder. A *unit interest holder* is any person who holds a direct or indirect interest, including a beneficial interest, in a widely held fixed investment trust at any time during the calendar year.

Widely held fixed investment trust. A *widely held fixed investment trust* is an arrangement classified as a trust under § 301.7701–4(c) of this chapter, and subject to subpart E, part I, subchapter J, chapter 1 of the Internal Revenue Code, in which any interest is held by a middleman.

(2) *Form 1099 requirement for trustees and middlemen*—(i) *Obligation to file Form 1099 with the Internal Revenue Service.* Except as provided in paragraph (j)(2)(iv) of this section—

(A) Every trustee must file with the Internal Revenue Service the appropriate Forms 1099 reporting the information specified in paragraph (j)(2)(ii) of this section with respect to any unit interest holder who holds an interest in the trust directly and not through a middleman; and

(B) Every middleman must file with the Internal Revenue Service the appropriate Forms 1099, reporting the information specified in paragraph (j)(2)(ii) of this section with respect to any unit interest holder on whose behalf or account the middleman holds an interest in the trust or acts in a capacity as an intermediary.

(ii) *Information to be reported.* The following information must be reported to the Internal Revenue Service on the appropriate Forms 1099—

(A) The name, address, and taxpayer identification number of the unit interest holder;

(B) The name, address, and taxpayer identification number of the person required to file the form;

(C) The amount of trust income (determined in accordance with paragraph (j)(6)(i) of this section) attributable to the unit interest holder for the calendar year for which the return is made;

(D) In the case of the sale or other disposition of a trust asset during the calendar year, the portion of the gross proceeds relating to the trust asset that is attributable to the unit interest holder; and

(E) Any other information required by the Forms 1099.

(iii) *Time and place for filing Forms 1099.* The Forms 1099 required to be filed with the Internal Revenue Service by trustees or middlemen pursuant to paragraph (j)(2)(i) of this section must be filed on or before February 28 of the year following the year for which the Forms 1099 are being filed. The returns must be filed with the appropriate Internal Revenue Service Center, at the address listed in the instructions for the Forms 1099. For extensions of time for filing returns under this section, see § 1.6081–1. For magnetic media filing requirements, see § 301.6011–2 of this chapter.

(iv) *Forms 1099 not required.* A Form 1099 is not required for a unit interest holder that is an exempt recipient. However, if the trustee or middleman backup withholds under section 3406 on payments made to a unit interest holder (because, for example, the unit interest holder has failed to furnish a Form W–9 on request), then the trustee or middleman is required to make a return under this section, unless the trustee or middleman refunds the amount withheld in accordance with § 31.6413(a)–3 of this chapter. An exempt recipient is generally exempt from information reporting without filing a certificate claiming exempt status unless the provisions of this paragraph (j)(2)(iv) require the unit interest holder to file a certificate. A trustee or middleman may in any case require a unit interest holder not otherwise required to file a certificate under this paragraph (j)(2)(iv) to file a certificate in order to qualify as an exempt recipient. See § 31.3406(h)–3(a)(1)(iii) and (c)(2) of this chapter for the certificate that a unit interest holder must provide if a trustee or middleman requires the certificate in order to treat the unit interest holder as an exempt recipient under this paragraph (j)(2)(iv). A trustee or middleman may treat a unit interest holder as an exempt recipient based upon a properly completed form as described in § 31.3406(h)–3(e)(2) of this chapter, its actual knowledge that the unit interest holder is a person described in this paragraph (j)(2)(iv), or the indicators described in this paragraph (j)(2)(iv). Any unit interest holder who ceases to be an exempt recipient shall, no later than 10 days after such cessation, notify the trustee or middleman in writing when it ceases to be an exempt recipient. For purposes of this paragraph (j)—

(A) *Corporation.* A corporation, as defined in section 7701(a)(3), whether domestic or foreign, is an exempt recipient. In addition, for purposes of this paragraph (j)(2)(iv), the term corporation includes a partnership all of whose members are corporations described in this paragraph (j)(2)(iv), but only if the partnership files with the trustee or middleman a properly completed form as described in § 31.3406(h)–3(e)(2) of this chapter. Absent actual knowledge otherwise, a trustee or middleman may treat a unit interest holder as a corporation (and, therefore, as an exempt recipient) if one of the requirements of paragraph (j)(2)(iv)(A)(*1*), (*2*), (*3*), or (*4*), is met at the time a unit interest holder acquires an interest in the trust.

(*1*) The name of the unit interest holder contains an unambiguous expression of corporate status (that is, Incorporated, Inc., Corporation, Corp., P.C., (but not Company or Co.)) or contains the term *insurance company, indemnity company, reinsurance company,* or *assurance company,* or its name indicates that it is an entity listed as a per se corporation under § 301.7701–2(b)(8)(i) of this chapter.

(*2*) The trustee or middleman has on file a corporate resolution or similar document clearly indicating corporate status. For this purpose, a similar document includes a copy of Form 8832, filed by the unit interest holder to elect classification as an association under § 301.7701–3(c) of this chapter.

(*3*) The trustee or middleman receives a Form W–9 which includes an EIN and a statement from the unit interest holder that it is a domestic corporation.

(*4*) The trustee or middleman receives a withholding certificate described in § 1.1441–1(e)(2)(i), that includes a certification that the person whose name is on the certificate is a foreign corporation.

(B) *Tax exempt organization.* Any organization that is exempt from taxation under section 501(a) is an exempt recipient. A custodial account under section 403(b)(7) shall be considered an exempt recipient under this paragraph. A trustee or middleman may treat an organization as an exempt recipient under this paragraph (j)(2)(iv)(B) without requiring a certificate if the organization's name is listed in the compilation by the Commissioner of organizations for which a deduction for charitable contributions is allowed, if the name of the organization contains an unambiguous indication that it is a tax-exempt organization, or if the organization is known to the trustee or middleman to be a tax-exempt organization.

(C) *Individual retirement plan.* An individual retirement plan as defined in section 7701(a)(37) is an exempt recipient. A trustee or middleman may treat any such plan of which it is the trustee or custodian as an exempt recipient under this paragraph (j)(2)(iv)(C) without requiring a certificate.

(D) *United States.* The United States Government and any wholly-owned agency or instrumentality thereof are exempt recipients. A trustee or middleman may treat a person as an exempt recipient under this paragraph (j)(2)(iv)(D) without requiring a certificate if the name of such person reasonably indicates it is described in this paragraph (j)(2)(iv)(D).

(E) *State.* A State, the District of Columbia, a possession of the United States, a political subdivision of any of the foregoing, a wholly-owned agency or instrumentality of any one or more of the foregoing, and a pool or partnership composed exclusively of any of the foregoing are exempt recipients. A trustee or middleman may treat a person as an exempt recipient under this paragraph (j)(2)(iv)(E) without requiring a certificate if the name of such person reasonably indicates it is described in this paragraph (j)(2)(iv)(E) or if such person is known generally in the community to be a State, the District of Columbia, a possession of the United States or a political subdivision or a wholly-owned agency or instrumentality or any one or more of the foregoing (for example, an account held in the name of ''Town of S'' or ''County of T'' may be treated as held by an exempt recipient under this paragraph (j)(2)(iv)(E)).

(F) *Foreign government.* A foreign government, a political subdivision of a foreign government, and any wholly-owned agency or instrumentality of either of the foregoing are exempt recipients. A trustee or middleman may treat a foreign government or a political subdivision thereof as an exempt recipient under this paragraph (j)(2)(iv)(F) without requiring a certificate provided that its name reasonably indicates that it is a foreign government or provided that it is known to the trustee or middleman to be a foreign government or a political subdivision thereof (for example, an account held in the name of the ''Government of V'' may be treated as held by a foreign government).

(G) *International organization.* An international organization and any wholly-owned agency or instrumentality thereof are exempt recipients. The term *international organization* shall have the meaning ascribed to it in section 7701(a)(18). A trustee or middleman may treat a unit interest holder as an international organization without requiring a certificate if the unit interest holder is designated as an international organization by executive order (pursuant to 22 U.S.C. 288 through 288f).

(H) *Foreign central bank of issue.* A foreign central bank of issue is an exempt recipient. A foreign central bank of issue is a bank which is by law or government sanction the principal authority, other than the government itself, issuing instruments intended to circulate as currency. See § 1.895–1(b)(1). A trustee or middleman may treat a person as a foreign central bank of issue (and, therefore, as an exempt recipient) without requiring a certificate

provided that such person is known generally in the financial community as a foreign central bank of issue or if its name reasonably indicates that it is a foreign central bank of issue.

(I) *Securities and commodities dealer.* A dealer in securities, commodities, or notional principal contracts that is registered as such under the laws of the United States or a State or under the laws of a foreign country is an exempt recipient. A trustee or middleman may treat a dealer as an exempt recipient under this paragraph (j)(2)(iv)(I) without requiring a certificate if the person is known generally in the investment community to be a dealer meeting the requirements set forth in this paragraph (j)(2)(iv)(I) (for example, a registered broker-dealer or a person listed as a member firm in the most recent publication of members of the National Association of Securities Dealers, Inc.).

(J) *Real Estate Investment Trust.* A real estate investment trust, as defined in section 856 and § 1.856–1, is an exempt recipient. A trustee or middleman may treat a person as a real estate investment trust (and, therefore, as an exempt recipient) without requiring a certificate if the person is known generally in the investment community as a real estate investment trust.

(K) *Entity registered under the Investment Company Act of 1940.* An entity registered at all times during the taxable year under the Investment Company Act of 1940, as amended (15 U.S.C. 80a–1), (or during such portion of the taxable year that it is in existence), is an exempt recipient. An entity that is created during the taxable year will be treated as meeting the registration requirement of the preceding sentence provided that such entity is so registered at all times during the taxable year for which such entity is in existence. A trustee or middleman may treat such an entity as an exempt recipient under this paragraph (j)(2)(iv)(K) without requiring a certificate if the entity is known generally in the investment community to meet the requirements of the preceding sentence.

(L) *Common trust fund.* A common trust fund, as defined in section 584(a), is an exempt recipient. A trustee or middleman may treat the fund as an exempt recipient without requiring a certificate provided that its name reasonably indicates that it is a common trust fund or provided that it is known to the trustee or middleman to be a common trust fund.

(M) *Financial institution.* A financial institution such as a bank, mutual savings bank, savings and loan association, building and loan association, cooperative bank, homestead association, credit union, industrial loan association or bank, or other similar organization, whether organized in the United States or under the laws of a foreign country is an exempt recipient. A financial institution also includes a clearing organization defined in § 1.163–5(c)(2)(i)(D)(*8*) and the Bank for International Settlements. A trustee or middleman may treat any person described in the preceding sentence as an exempt recipient without requiring a certificate if the person's name (including a foreign name, such as ''Banco'' or ''Banque'') reasonably indicates the unit interest holder is a financial institution described in the preceding sentence.

(N) *Trust.* A trust which is exempt from tax under section 664(c) (i.e., a charitable remainder annuity trust or a charitable remainder unitrust) or is described in section 4947(a)(1) (relating to certain charitable trusts) is an exempt recipient. A trustee or middleman which is a trustee of the trust may treat the trust as an exempt recipient without requiring a certificate.

(O) *Middlemen.* A middleman, as defined in paragraph (j)(1) of this section, is an exempt recipient.

(P) *Brokers.* A broker, as defined in section 6045(c) and § 1.6045–1(a)(1), is an exempt recipient.

(Q) *Real estate mortgage investment conduit.* A real estate mortgage investment conduit, as defined in section 860D(a), is an exempt recipient.

(R) *A widely held fixed investment trust.* A widely held fixed investment trust, as defined in paragraph (j)(1) of this section, is an exempt recipient.

(3) *Trustee's requirement to furnish information to middlemen, exempt recipients, and noncalendar-year taxpayers*—(i) *In general.* The trustee must cause to be printed in a publication generally read by and available to requesting persons, the name, address, and telephone number of a representative or official of the trust who will provide the information specified in paragraph (j)(3)(ii) of this section to such persons. The trustee must provide the information in the time and manner prescribed in paragraph (j)(3)(iii)(C) of this section to requesting persons who request the information in the manner prescribed in paragraph (j)(3)(iii)(B) of this section.

(ii) *Information required to be reported.* For each calendar quarter or calendar year specified, the trustee must have available and provide, upon request, the following information computed as of the last day of the quarter, or computed as of December 31 of the year specified—

(A) The name of the trust, the name and address of the trustee of the trust, and the employer identification number of the trust;

(B) The Committee on Uniform Security Identification Procedure (CUSIP) number, account number, serial number or other identifying number of the trust;

(C) All items of income (determined in accordance with paragraph (j)(6)(i) of this section), deduction, and credit of the trust, expressed both as a total dollar amount for the trust and as a dollar amount per unit outstanding on the last day of the period requested;

(D) If any trust asset has been sold or otherwise disposed of during the period requested, the gross proceeds received by the trust for the trust asset, the date of sale or disposition of the trust asset, and the percentage of that trust asset that has been sold or disposed of. The trust must also provide a schedule showing the portion (expressed in terms of a percentage) of the total fair market value of all the assets held by the trust that the asset sold or disposed of represented as of the last day of the quarter for each quarter that the asset was held by the trust;

(E) The amount of affected expenses of the trust expressed both as a total dollar amount and as a dollar amount per unit outstanding on the last day of the period requested;

(F) In the case of a widely held fixed investment trust that holds a pool of debt instruments subject to section 1272(a)(6)(C)(iii), the information required by paragraph (j)(6)(ii) of this section;

(G) The number of units outstanding on the last business day of the period requested; and

(H) Any other information necessary for a unit interest holder that is the beneficial owner of a trust interest to properly report the income, deductions, and credits attributable to the portion of the trust treated as owned by the unit interest holder under section 671. For this purpose, the trustee shall separately state any trust item that, if taken into account separately by a unit interest holder, could result in an income tax liability for that unit interest holder different from that which would result if the unit interest holder did not take the item into account separately.

(iii) *Providing and requesting trust information*—(A) *Requesting persons.* The following persons that hold an interest in a trust may request the information specified in paragraph (j)(3)(ii) of this section from that trust—

(*1*) Any middleman;

(*2*) Any broker who holds a unit interest on its own behalf;

(*3*) Any other exempt recipient who holds an interest directly and not through a middleman;

(*4*) Any noncalendar-year unit interest holder who holds a trust interest directly and not through a middleman; and

(*5*) A representative or agent for a person specified in paragraphs (j)(3)(iii)(A) (*1*) through (*4*) of this section.

(B) *Manner of requesting information from the trust.* A requesting person may request the information specified in paragraph (j)(3)(ii) of this section in writing or by telephone. The request must specify the calendar quarters or years for which the information is needed.

(C) *Time and manner of furnishing information*—(*1*) *Manner of furnishing information.* The information specified in paragraph (j)(3)(ii) of this section may be furnished as follows—

(*i*) By telephone;

(*ii*) By written statement sent by first class mail to the address provided by the requesting person;

(*iii*) By causing it to be printed in a publication generally read by and available to requesting persons and by notifying the requesting person in writing or by telephone of the publication in which it will appear, the date on which it will appear, and, if possible, the page on which it will appear; or

(*iv*) By any other method agreed to by the parties.

(*2*) *Time for furnishing the information.* The trustee must furnish, or cause to be furnished, the information specified in paragraph (j)(3)(ii) of this section on or before the later of—

(*i*) The 30th day after the close of the period for which the information was requested; or

(*ii*) The day that is 2 weeks after the receipt of the request.

(4) *Requirement of furnishing statement to unit interest holder*—(i) *In general.* Every trustee or middleman required to file appropriate Forms 1099 under paragraph (j)(2)(i) of this section with respect to a particular unit interest holder must furnish to that unit interest holder (the person whose identifying number is required to be shown on the form) a written statement showing the information required by paragraph (j)(4)(ii) of this section.

(ii) *Information required to be provided on written statement.* The written statement must specify for the calendar year for which the return is made the following information—

(A) The name of the trust and the CUSIP number, account number, serial number, or other identifying number for the trust or unit interest;

(B) The name, address, and taxpayer identification number of the person required to send the statement;

(C) All items of income (determined in accordance with paragraph (j)(6)(i) of this section), deduction, and credit of the trust attributable to the unit interest holder;

(D) If any trust asset is sold, or otherwise disposed of during the calendar year, the portion of the gross proceeds relating to the trust asset that is attributable to the unit interest holder, the date of sale or disposition of the trust asset, and the percentage of that trust asset that has been sold or otherwise disposed of. A schedule showing the portion (expressed in terms of a percentage) of the total fair market value of all the assets held by the trust that the asset sold or disposed of represented as of the last day of the quarter for each quarter that the asset was held by the trust must be included with the statement;

(E) In the case of a unit interest holder that is an affected investor, the affected expenses that are attributable to the unit interest holder;

(F) In the case of a widely held fixed investment trust that holds a pool of debt instruments subject to section 1272(a)(6)(C)(iii), the information required by paragraph (j)(6)(ii) of this section;

(G) Any other information necessary for a unit interest holder to properly report the income, deductions, and credit attributable to the unit interest holder under section 671. For this purpose, the trustee or middleman, as the case may be, shall separately state any trust item that, if taken into account separately by any unit interest holder, could result in an income tax liability for that unit interest holder different from that which would result if the unit interest holder did not take the item into account separately; and

(H) A statement that the items of income, deduction, and credit and other information shown on the statement must be taken into account in computing the taxable income and credits of the unit interest holder on the income tax return of the unit interest holder.

(iii) *Due date and other requirements with respect to statement required to be furnished to the unit interest holder.* The statement required to be furnished to the unit interest holder under this paragraph (j)(4) for a calendar year must be furnished to the holder after April 30 of that year and on or before March 15 of the year following the year for which the statement is being furnished. The person sending the statement must maintain in its records a copy of the statement furnished to the unit interest holder for a period of 3 years from the due date for furnishing such statement specified in this paragraph (j)(4).

(5) *Requirement that middlemen furnish information to exempt recipients and noncalendar-year taxpayers.* For each calendar quarter or calendar year specified, any exempt recipient listed in paragraph (j)(2)(iv) of this section and any noncalendar-year unit interest holder may request from the middleman who holds the unit interest on behalf of, or for the account of, the unit interest holder, the information listed in paragraph (j)(4)(ii) (A) through (G) of this section computed as of the last day of the calendar quarter specified, or computed as of December 31 of the year specified. The middleman must provide in writing or by telephone the information listed in paragraph (j)(4)(ii) (A) through (G) of this section to any such requester on or before the later of the 45th day after the close of the period for which the information was requested, or that day that is 4 weeks after the receipt of the request.

(6) *Special rules.* For purposes of this paragraph (j):

(i) *Determination of trust income.* Trust income is to be determined in the following manner—

(A) The trust is to be treated as a calendar year taxpayer using the cash receipts and disbursements method of accounting; and

(B) The amount of trust income for the calendar year is the gross amount of income generated by the trust assets (other than from the sale or other disposition of trust assets). Thus, in the case of a trust that receives a payment net of an expense, the payment must be grossed up to reflect the deducted expense.

(ii) *Widely held fixed investment trust holding pool of debt instruments subject to section 1272(a)(6)(C)(iii).* In the case of a widely held fixed investment trust that holds a pool of debt instruments subject to section 1272(a)(6)(C)(iii), requesting persons, unit interest holders, exempt recipients, and noncalendar-year taxpayers must be provided, as required under paragraphs (j)(3)(ii)(F), (j)(4)(ii)(F), and (j)(5), respectively, of this section, information necessary to compute—

(A) The accrual of market discount, including the type of information required under paragraphs § 1.6049–7(f)(2)(i)(G) in the case of a REMIC regular interest or a collateralized debt

obligation not issued with original issue discount; and

(B) The accrual of original issue discount and market discount, including the type of information required under § 1.6049–7(f)(2)(ii) (E), (F), (I), and (K) in the case of a REMIC regular interest or a collateralized debt obligation that is issued with original issue discount.

(7) *Backup withholding requirements.* Every trustee and middleman filing a Form 1099 under this section shall be considered a payor within the meaning of § 31.3406(a)–2 of this chapter. The obligation of a trustee or middleman as payor to backup withhold shall be determined pursuant to section 3406 and the regulations promulgated thereunder.

(8) *Penalties for failure to comply.* Every trustee and middleman who has a reporting obligation under this paragraph (j) and who fails to comply is subject to the penalties provided by sections 6721, 6722, and any other applicable penalty provisions.

(9) *Effective date.* Trustees and middlemen must report in accordance with this paragraph (j) for calendar years beginning on or after the date that the final regulations are published in the **Federal Register**.

Par. 3. Section 1.6049–7 is amended by adding a sentence to the end of paragraph (f)(4) to read as follows:

§ 1.6049–7 Returns of information with respect to REMIC regular interests and collateralized debt obligations.

* * * * *

(f) * * *

(4) * * * For rules regarding a widely held fixed investment trust that holds a pool of debt instruments subject to section 1272(a)(6)(C)(iii), see § 1.671–4(j).

* * * * *

PART 301—PROCEDURE AND ADMINISTRATION

Par. 4. The authority citation for part 301 continues to read in part as follows:

Authority: 26 U.S.C. 7805 * * *

Par. 5. Section 301.6109–1 is amended by revising the last sentence of paragraph (a)(2)(i) to read as follows:

§ 301.6109–1 Identifying numbers.

(a) * * *

(2) * * * (i) * * * If the trustee has not already obtained a taxpayer identification number for the trust, the trustee must obtain a taxpayer identification number for the trust as provided in paragraph (d)(2) of this section in order to report pursuant to § 1.671–4 (a), (b)(2)(i)(B), (b)(3)(i), or (j) of this chapter.

* * * * *

Michael P. Dolan,

Deputy Commissioner of Internal Revenue.

[FR Doc. 98–21640 Filed 8–12–98; 8:45 am]

BILLING CODE CODE 4830–01–U

ENVIRONMENTAL PROTECTION AGENCY

40 CFR Part 261

[FRL–6144–3]

RIN 2050–AD88

Hazardous Waste Management System; Identification and Listing of Hazardous Waste; Petroleum Refining Process Wastes; and Land Disposal Restrictions for Newly Identified Hazardous Wastes; Notice of Data Availability; Extension of Comment Period

AGENCY: Environmental Protection Agency.

ACTION: Notice of data availability and request for comment; extension of comment period.

SUMMARY: On July 15, 1998, the U.S. Environmental Protection Agency (EPA or Agency) published in the **Federal Register** a notice of data availability (NODA) and request for comment on the specific issue of using gasification technologies to recycle oil-bearing hazardous secondary materials from the petroleum refining industry (63 FR 38139). The Agency received two written requests that the comment period be extended. In order to address the concerns of these individuals, the Agency is extending the comment period an additional sixty days. The purpose of this notice is to extend the comment period to October 13, 1998. The Agency is extending the comment period only with respect to the data and information described in the document published on July 15, 1998 (63 FR 38139).

DATES: Comments will be accepted on or before October 13, 1998.

ADDRESSES: Commenters must send an original and two copies of their comments referencing docket number F–98–PR2A–FFFFF to: RCRA Docket Information Center, Office of Solid Waste (5305G), U.S. Environmental Protection Agency Headquarters (EPA, HQ), 401 M Street, SW, Washington, D.C. 20426. Hand deliveries of comments should be made to the Arlington, VA, address listed below. Comments may also be submitted electronically by sending electronic mail through the Internet to: rcradocket@epamail.epa.gov. Comments in electronic format should also be identified by the docket number F–98–PR2A–FFFFF. All electronic comments must be submitted as an ASCII file avoiding the use of special characters and any form of encryption. If comments are not submitted electronically, EPA is asking prospective commenters to voluntarily submit one additional copy of their comments on labeled personal computer diskettes in ASCII (TEXT) format or a word processing format that can be converted to ASCII (TEXT). It is essential to specify on the disk label the word processing software and version/edition as well as the commenter's name. This will allow EPA to convert the comments into one of the word processing formats utilized by the Agency. Please use mailing envelopes designed to physically protect the submitted diskettes. EPA emphasizes that submission of comments on diskettes is not mandatory, nor will it result in any advantage or disadvantage to any commenter. Commenters should not submit electronically any confidential business information (CBI). An original and two copies of CBI must be submitted under separate cover to: RCRA CBI Document Control Officer, Office of Solid Waste (5305W), U.S. EPA, 401 M Street, SW, Washington, D.C. 20460. Public comments and supporting materials are available for viewing in the RCRA Information Center (RIC), located at Crystal Gateway I, First Floor, 1235 Jefferson Davis Highway, Arlington, VA. The RIC is open from 9 a.m. to 4 p.m., Monday through Friday, excluding federal holidays. To review docket materials, it is recommended that the public make an appointment by calling (703) 603–9230. The public may copy a maximum of 100 pages from any regulatory docket at no charge. Additional copies cost $0.15/page. For information on accessing paper and/or electronic copies of the document, see the **SUPPLEMENTARY INFORMATION** section.

FOR FURTHER INFORMATION CONTACT: For general information, contact the RCRA Hotline at (800) 424–9346 or TDD (800) 553–7672 (hearing impaired). In the Washington, D.C., metropolitan area, call (703) 412–9810 or TDD (703) 412–3323. For information on specific aspects of the document published July 15, 1998 (63 FR 38139), contact Maximo Diaz, Jr. or Ross Elliott, Office of Solid Waste (5304W), U.S. Environmental Protection Agency, 401 M Street, SW, Washington, D.C. 20460. [E-mail

addresses and telephone numbers: Diaz.max@epamail.epa.gov, (703) 308–0439; elliott.ross@epamail.epa.gov, (703) 308–8748].

SUPPLEMENTARY INFORMATION: The index to the docket is available on the Internet. Follow these instructions to access the information electronically:

www.http://www.epa.gov/epaoswer/osw/hazwaste.htm#id
FTP: ftp.epa.gov
Login: anonymous
Password: your Internet address
Files are located in/pub/epaoswer

The official record for this action will be kept in paper form, and will be maintained at the address in **ADDRESSES** at the beginning of this document. EPA will transfer all comments received electronically into paper form and place them in the official record, which will also include all comments submitted directly in writing. The official record is the paper record. EPA responses to comments, whether the comments are written or electronic, will be in a document in the **Federal Register** or in a separate response to comments document placed in the official record for this rulemaking at the same time this document is published in the **Federal Register.**

EPA will not immediately reply to commenters electronically other than to seek clarification of electronic comments that may be garbled in transmission or during conversion to paper form, as discussed above.

Dated: August 6, 1998.

Matthew Hale,

Acting Director, Office of Solid Waste.

[FR Doc. 98–21751 Filed 8–12–98; 8:45 am]

BILLING CODE 6560–50–M

NATIONAL AERONAUTICS AND SPACE ADMINISTRATION

48 CFR Parts 1827 and 1852

Reportable Item Definition

AGENCY: National Aeronautics and Space Administration (NASA).

ACTION: Proposed rule.

SUMMARY: This is a proposed rule to conform the two NASA FAR Supplement (NFS) definitions of ''reportable item'' the same and to improve their clarity by adding examples.

DATES: Comments should be submitted on or before October 13, 1998.

ADDRESSES: Interested parties should submit written comments to: Tom O'Toole, NASA Headquarters Office of Procurement, Contract Management Division (Code HK), Washington, DC 20546. Comments may also be submitted by email to thomas.otoole@hq.nasa.gov.

FOR FURTHER INFORMATION CONTACT: Tom O'Toole, (202) 358–0478.

SUPPLEMENTARY INFORMATION:

Background

The NFS has two definitions of ''reportable Item''—in section 1827.301, Definitions, and the clause at 1852.227–70, New Technology. These definitions vary slightly, and this rule proposes to conform these definitions by using the version at 1827.301 as a baseline. Other minor adjustments are made to cite appropriate USC titles and add examples of reportable items.

Impact

NASA certifies that this regulation will not have a significant economic impact on a substantial number of small business entities under the Regulatory Flexibility Act (5 U.S.C. 601 *et seq.*) since the changes are editorial clarifications and do not impose any new requirements on offerors or contractors. The rule does not impose any reporting or recordkeeping requirements subject to the Paperwork Reduction Act.

List of Subjects in 48 CFR Parts 1827 and 1852

Government procurement.

Tom Luedtke,

Deputy Associate Administrator for Procurement.

Accordingly, 48 CFR Parts 1827 and 1852 are proposed to be amended as follows:

1. The authority citation for 48 CFR Parts 1827 and 1852 continues to read as follows:

Authority: 42 U.S.C. 2473(c)(1).

PART 1827—PATENTS, DATA, AND COPYRIGHTS

2. Section 1827.301 is amended by revising the definition of ''reportable item'' to read as follows:

1827.301 Definitions.

* * * * *

Reportable item, as used in this subpart, means any invention, discovery, improvement, or innovation of the contractor, whether or not patentable or copyrightable or otherwise protectible under Titles 17 or 35 of the United States Code, made in the performance of any work under any NASA contract or in the performance of any work that is reimbursable under any clause in any NASA contract providing for reimbursement of costs incurred before the effective date of the contract. Reportable items also include new processes, machines, manufactures, compositions of matter, and computer programs, and improvements to, or new applications of, existing processes, machines, manufactures, compositions of matter, and computer programs.

* * * * *

PART 1852—SOLICITATION PROVISIONS AND CONTRACT CLAUSES

3. Section 1852.227–70 is amended by revising the clause date and the definition of ''reportable item'' in paragraph (a) of the clause to read as follows:

1852.227–70 New technology.

* * * * *

New Technology

(a) * * *

Reportable item, as used in this subpart, means any invention, discovery, improvement, or innovation of the contractor, whether or not patentable or copyrightable or otherwise protectible under Titles 17 or 35 of the United States Code, made in the performance of any work under any NASA contract or in the performance of any work that is reimbursable under any clause in any NASA contract providing for reimbursement of costs incurred before the effective date of the contract. Reportable items also include new processes, machines, manufactures, compositions of matter, and computer programs, and improvements to, or new applications of, existing processes, machines, manufactures, compositions of matter, and computer programs.

* * * * *

[FR Doc. 98–21616 Filed 8–12–98; 8:45 am]

BILLING CODE 7510–01–P

DEPARTMENT OF THE INTERIOR

Fish and Wildlife Service

50 CFR Part 17

Endangered and Threatened Wildlife and Plants; Notice of Availability of Protocol for Surveying for the Endangered Cactus Ferruginous Pygmy-Owl; Opening of Public Comment Period on Survey Protocol

AGENCY: Fish and Wildlife Service, Interior.

ACTION: Notice of Availability; Opening of Public Comment Period.

SUMMARY: The Fish and Wildlife Service (Service), in cooperation with the Arizona Game and Fish Department (Department), announces the availability for public comment of survey protocol for determining the

presence of the endangered cactus ferruginous pygmy-owl (*Glaucidium brasilianum cactorum*) within known historic range of the species in Arizona. The proposed survey protocol comes in two versions depending on its use: the first is for use in determining if cactus ferruginous pygmy-owls are present on specific project sites where an activity is proposed; the second is for use in gathering information on distribution, occurrence, and numbers of pygmy-owls over more extensive areas of its historic range in Arizona. This proposed protocol is founded on procedures established by the Arizona Game and Fish Department in 1993. The current proposed protocol incorporates modifications found to be appropriate following the 5 years of field application. Differences between the 1993 protocol and the current proposed protocol include a reduction in the survey period from 9 months (September through May) to 6 months (January through June); and an increase in surveys from one to three, with at least 30 days between each of the three surveys preferred, but a minimum of 15 days required. At least one survey must occur between February 15 and April 15. In reviewing determinations of pygmy owl presence or absence, the Service will require the implementation of the protocol for two consecutive years prior to actions that may impact the owls or their habitats.

The existing protocol will remain in use (i.e., surveys from September through December this year will still be accepted through December 31, 1998). Use of the currently proposed protocol will be required from January 1, 1999, forward.

The Service and Department will be submitting the protocol to recognized species and technical experts for peer review to ensure a scientifically sound basis for determination of the presence of the species within its known range.

The Service and the Department will regularly review and modify, as necessary, the survey protocol to ensure that the best available scientific information is incorporated into the prescribed methodology.

DATES: Data and comments must be received by September 14, 1998.

ADDRESSES: Copies of this protocol may be obtained from the Field Supervisor, Arizona Ecological Services Field Office, 2321 West Royal Palm Road, Phoenix, Arizona, 85021. Coments and materials concerning the survey protocol should be sent to the Field Supervisor at the above address.

FOR FURTHER INFORMATION CONTACT: Tom Gatz, Acting Field Supervisor, Arizona Ecological Services Field Office, at the above address (602) 640-2720.

SUPPLEMENTARY INFORMATION:

Background

The cactus ferruginous pygmy-owl was listed by the Service as an endangered species in Arizona on March 10, 1997, based on extensive population declines within its historic range in the state. The pygmy-owl, a small reddish-brown owl, nests in a cavity in a tree or large columnar cactus. The species was once common to abundant in riparian forests, mesquite-cottonwood woodlands, and desertscrub habitats in central and southern portions of the state. It is still considered a potential inhabitant of riparian areas, where this extremely limited vegetative community still occurs, and is found in upper Sonoran Desert habitats usually consisting of dense ironwood, mesquite, acacia, bursage, and saguaro cacti, with understory vegetation of smaller trees and shrubs.

The Service is seeking additional information in order to more adequately understand the occurrence and biology of the cactus ferruginous pygmy-owl in central and southern Arizona. However, until more complete scientific information is available, the Service believes that continued use of the current survey protocol through December, 1998, and use of the proposed protocol thereafter will provide the most biologically valid data upon which to determine habitat use and occupancy by the pygmy-owl.

Author

The primary author of this document is Jennifer Fowler-Propst, Acting Field Supervisor, Arizona Ecological Services Field Office (see **ADDRESSES** section).

Authority

The authority for this action is the Endangered Species Act (16 U.S.C. 1532 *et seq.*).

Dated: August 7, 1998.

Geoffrey L. Haskett,

Acting Regional Director, Fish and Wildlife Service.

[FR Doc. 98–21709 Filed 8–12–98; 8:45 am]

BILLING CODE 4310–55–P

DEPARTMENT OF THE INTERIOR

Fish and Wildlife Service

50 CFR Part 17

Endangered and Threatened Wildlife and Plants; Notice of Guidance for Private Landowners and Federal, State, and Local Agencies Concerning Take of the Endangered Cactus Ferruginous Pygmy-Owl; Opening of Public Comment Period on the Guidance

AGENCY: Fish and Wildlife Service, Interior.

ACTION: Notice of availability, opening of public comment period.

SUMMARY: The Fish and Wildlife Service (Service), announces the availability for public comment of guidance for use in determining if take of the cactus ferruginous pygmy-owl (*Glaucidium brasilianum cactorum*) may result from activities within areas occupied by the species in Arizona.

Identification of actions that may be considered to result in take of the cactus ferruginous pygmy-owl was first provided by the Service in the final rule listing the species on March 10, 1997. Additional guidance for private landowners was subsequently issued by the Service in December 1997. The proposed revisions to this guidance more clearly define the types of habitats in which the owl may be encountered, and the Arizona counties in which the species is known to have historically occurred and which may still harbor the owl in appropriate habitats. This guidance also expands the required survey effort from one year to two consecutive years prior to actions that may impact the owl or its habitats.

DATES: Data and comments must be received by September 14, 1998.

ADDRESSES: Copies of this guidance may be obtained from the Field Supervisor, Arizona Ecological Services Field Office, 2321 West Royal Palm Road, Phoenix, Arizona 85021. Comments and materials concerning the guidance should be sent to the Field Supervisor at the above address.

FOR FURTHER INFORMATION CONTACT: Tom Gatz, Acting Field Supervisor, Arizona Ecological Services Field Office, at the above address, (602) 640–2720.

SUPPLEMENTARY INFORMATION:

Background

The cactus ferruginous pygmy-owl was listed by the Service as an endangered species in Arizona on March 10, 1997, based on extensive population declines within its historic range in the state. The pygmy-owl, a

small reddish-brown owl, nests in a cavity in a tree or large columnar cactus. The species was once common to abundant in riparian forests, mesquite-cottonwood woodlands, and desertscrub habitats in central and southern portions of the state. It is still considered a potential inhabitant of riparian areas, where this extremely limited vegetative community still occurs, and is found in upper Sonoran Desert habitats usually consisting of dense ironwood, mesquite, acacia, bursage, and saguaro cacti, with understory vegetation of smaller trees and shrubs.

Urban and suburban development within the remaining appropriate habitat of the pygmy-owl is ongoing. These and other actions may result in take of the species. The Endangered Species Act and implementing regulations found at 50 CFR 17.21 and 17.31 set forth a series of general prohibitions that apply to all endangered and threatened wildlife, respectively. These prohibitions, in part, make it illegal for any person subject to the jurisdiction of the United States to take (includes harass, harm, pursue, hunt, shoot, wound, kill, trap, or collect or to attempt any of these). Regulations at 50 CFR 17.3 define the terms ''harm'' and ''harass'' as used under the definition of ''take.'' ''Harm'' is defined as an act which actually kills or injures wildlife. Such acts may include significant habitat modification that impairs essential behavioral patterns, including breeding, feeding, or sheltering. ''Harass'' is defined as an intentional or negligent act or omission which creates a likelihood of injury to wildlife by annoying it to such an extent as to significantly disrupt normal behavior patterns, including, but not limited to, breeding, feeding, or sheltering.

Permits may be issued to carry out otherwise prohibited activities involving endangered and threatened wildlife species under certain circumstances. Such permits are available for scientific purposes, to enhance the propagation or survival of the species, and/or for incidental take in connection with otherwise lawful activities.

At the time of listing the owl, the Service provided a partial listing of activities that could potentially harm, harass, or otherwise take the pygmy-owl. These included—

(1) Removal of nest trees;

(2) Removal of a nest box in use by the pygmy-owl;

(3) Clearing or significant modification of occupied habitat, whether or not the nest tree is included;

(4) Sustained noise disturbance during the breeding season;

(5) Pursuit or harassment of individual birds;

(6) Frequent or lengthy low-level flights over occupied habitat during the breeding season;

(7) Severe overgrazing that results in the removal of understory vegetation.

In furtherance of the Service's policy to provide information concerning what activities may be considered take of the pygmy-owl, the Service is again making available information to aid both Federal and non-Federal entities in determining when a take situation may occur.

The Service is seeking additional information in order to more adequately understand the occurrence and biology of the cactus ferruginous pygmy-owl in central and southern Arizona. However, until more complete scientific information is available, the Service believes that the use of the guidance document will protect the pygmy-owl while allowing carefully considered development to proceed.

Author

The primary author of this document is Tom Gatz, Acting Field Supervisor, Arizona Ecological Services Field Office (see **ADDRESSES** section).

Authority

The authority for this action is the Endangered Species Act (16 U.S.C. 1532 *et seq.*).

Dated: August 7, 1998.

Geoffrey L. Haskett,

Acting Regional Director, Fish and Wildlife Service.

Notice: Availability of take guidance for the cactus ferruginous pygmy-owl

[FR Doc. 98–21708 Filed 8–12–98; 8:45 am]

BILLING CODE 4310–55–P

DEPARTMENT OF COMMERCE

National Oceanic and Atmospheric Administration

50 CFR Part 648

[I.D. 073098B]

Mid-Atlantic Fishery Management Council; Public Hearings

AGENCY: National Marine Fisheries Service (NMFS), National Oceanic and Atmospheric Administration (NOAA), Commerce.

ACTION: Public hearings, request for comments.

SUMMARY: The Mid-Atlantic Fishery Management Council (Council) and the Atlantic States Marine Fisheries Commission (Commission) will hold public hearings to allow for input on Amendment 1 to the Bluefish Fishery Management Plan (FMP).

DATES: Written comments on Amendment 1 will be accepted until September 15, 1998. The public hearings are scheduled to be held from August 24 to September 3, 1998. See **SUPPLEMENTARY INFORMATION** for specific dates and times.

ADDRESSES: Send comments to Christopher M. Moore, Acting Executive Director, Mid-Atlantic Fishery Management Council, Room 2115 Federal Building, 300 South New Street, Dover, DE 19904.

The hearings will be held in Massachusetts, Rhode Island, Connecticut, New York, New Jersey, Delaware, Maryland, Virginia, North Carolina, and Florida. See **SUPPLEMENTARY INFORMATION** for locations of the hearings.

FOR FURTHER INFORMATION CONTACT: Christopher M. Moore, Acting Executive Director, 302–674–2331, ext 16.

SUPPLEMENTARY INFORMATION:

Background

Amendment 1 to the FMP, prepared by the Council and the Commission, is intended to manage the bluefish fishery under both the Magnuson-Stevens Fishery Conservation and Management Act of 1976, as amended by the Sustainable Fisheries Act (SFA), and the Atlantic Coastal Fisheries Cooperative Management Act. The management unit is bluefish (*Pomatomus saltatrix*) in U.S. waters in the western Atlantic Ocean. The goal of the management plan is to conserve the bluefish resource along the Atlantic coast.

The SFA requires that an FMP's definition of overfishing contain status determination criteria comprised of two components: (1) A maximum fishing mortality threshold and (2) a minimum stock size threshold. For bluefish, the maximum F threshold is specified as F_{MSY}, or the fishing mortality rate which produces maximum sustainable yield (MSY). The minimum biomass threshold is specified as one-half the biomass level associated with maximum sustainable yield (B_{MSY}).

The Council and Commission propose to rebuild the bluefish stock to the B_{msy} level over a 9-year rebuilding period through the implementation of Amendment 1. The preferred alternative will eliminate overfishing and rebuild the bluefish stock through a graduated reduction in the fishing mortality rate. For the first 2 years of the rebuilding plan (1999–2000), F will remain at the

current level (F = 0.51) and then will be reduced to F = 0.41 in years 3–5 (2001–2003) and finally to F = 0.31 in years 6–9 (2004–2007). This schedule would allow for stock rebuilding to the level which would support harvests at or near MSY by the year 2007.

The following is a summary of the management measures proposed to be adopted by the Council and the Commission for implementation in Amendment 1.

Permitting and Reporting Requirements

1. Operator permits for commercial and party and charter boats.
2. Vessel permits for party and charter boats.
3. Vessel permits for commercial vessels (permit to sell).
4. Dealer permits (permits to purchase).
5. Permitted vessels may only sell to permitted dealers and permitted dealers may only buy from permitted vessels.
6. Party and charter boat, commercial vessel, and dealer reporting requirements.

Establishment of a Bluefish Monitoring Committee

The Bluefish Monitoring Committee would be a joint committee of the Council and Commission that would consist of staff representatives of the Mid-Atlantic, New England, and South Atlantic Fishery Management Councils, the Northeast Regional Office, the Northeast Fisheries Center, and Commission representatives. The Bluefish Monitoring Committee would annually review the best available data and recommend to the Council Committee and Commission Bluefish Management Board commercial (annual quota, minimum fish size, and minimum mesh size) and recreational (possession and size limits and seasonal closures) measures designed to assure that the target mortality level for bluefish is not exceeded.

Framework Adjustment Process

In addition to the annual review and modifications to management measures associated with the monitoring committee process, the Council could add or modify management measures through a framework adjustment procedure. This adjustment procedure would allow the Council to add or modify management measures through a streamlined public review process. As such, management measures that have been identified in the plan could be implemented or adjusted at any time during the year. The Commission could implement the same modifications through its adaptive management process.

Commercial Management Measures

It would be illegal for individuals who possess commercial bluefish permits to possess bluefish less than 12 inches (30.5 cm) total length (TL). If appropriate, the minimum fish size may be changed following the Bluefish FMP Monitoring Committee process or the framework adjustment process. Minimum mesh restrictions for otter trawls and gill nets may be implemented according to framework provisions.

A quota would be allocated to the commercial fishery to control fishing mortality. The quota would be based on the most recent estimates of stock size coupled with the target fishing mortality rate (which would allow for a calculation of total allowable landings). Based on the historical proportion of commercial and recreational landings for the period 1981–1989, 17 percent of the total allowable landings (TAL) would be allocated to the commercial fishery. If 17 percent of the TAL was less than 10.5 million lb (4,763 mt), the quota could be increased up to 10.5 million lb (4,763 mt), providing that the recreational fishery was not anticipated to land its entire allocation for the upcoming year. A state-by-state system to distribute and manage the annual commercial quota would be implemented by the Council and Commission. Quotas would be distributed to the states based on their percentage share of commercial landings for the period 1981-1989.

De Minimus Specifications

Any state that has commercial landings less than 0.1 percent of the total coastwide commercial landings in the last preceding year for which data are available would be eligible for *de minimus* status. The *de minimus* specifications apply only to the commercial fishery. Any state granted *de minimus* status would be allocated 0.1 percent of the coastwide commercial quota. The sum of the allocations to *de minimus* states would be deducted from the coastwide commercial quota before the remainder is allocated to the other states.

Recreational Fishery Measures

The recreational fishery throughout the management unit would be managed through an annual evaluation of a framework system of possession limits, size limits, and seasonal closures. The annual recreational possession limit, size limit, and season would be set at a range of 0 and the maximum allowed by the recreational share of the adopted fishing mortality rate reduction strategy. Initially, in addition to the current 10 fish possession limit, it would be illegal for recreational fishermen to possess whole bluefish or parts of bluefish less than 12 inches (30.5 cm) TL. Parts of bluefish could be less than the minimum size if the party/charter vessel had a permit from the state of landing that allowed smaller parts to be landed. States could develop and implement alternative recreational management measures that were equivalent to the coastwide measures.

A recreational harvest limit would be allocated to the recreational fishery to reduce exploitation rates on the fully recruited age groups. The harvest limit would be based on the most recent estimates of stock size coupled with the target fishing mortality rate (which would allow for a calculation of TAL). Based on the historical proportion of commercial and recreational landings from 1981–89, 83 percent of the TAL would be allocated to the recreational fishery.

Public Hearings

The dates, locations, and times of the hearings are scheduled as follows:

1. Monday, August 24, 1998, 7:30 p.m.—Kingborough Community College, Marine and Academic Center, 2001 Oriental Boulevard, Manhattan Beach, NY.
2. Monday, August 24, 1998, 7 p.m.—Holiday Inn Toms River, 290 Highway 37 East, Toms River, NJ.
3. Monday, August 24, 1998, 7 p.m.—Sheraton Fontainebleau Hotel, 10100 Coastal Highway, Ocean City, MD.
4. Tuesday, August 25, 1998, 1 p.m.—Comfort Inn Airport, 1940 Post Road, Providence, RI.
5. Tuesday, August 25, 1998, 7:30 p.m.—Holiday Inn, 3845 Veterans Memorial Highway, Ronkonkoma, NY.
6. Tuesday, August 25, 1998, 7 p.m.—Grand Hotel, Oceanfront and Philadelphia Avenue, Cape May, NJ.
7. Wednesday, August 26, 1998, 7 p.m.—Sandwich Community School, 365 Quaker Meetinghouse Road, Buzzards Bay, MA.
8. Thursday, August 27, 1998, 7 p.m.—Days Inn, 375 East Main Street, Branford, CT.
9. Monday, August 31, 1998, 7:30 p.m.—Division of Fish and Wildlife, Department of Natural Resources Auditorium, 89 Kings Highway, Dover, DE.
10. Monday, August 31, 1998, 7 p.m.—Stuart City Hall, 121 Southwest Flagler Avenue, Stuart, FL.
11. Tuesday, September 1, 1998, 7 p.m.—VA Marine Resources

Commission, 2600 Washington Avenue, Newport News, VA.

12. Wednesday, September 2, 1998, 7 p.m.—North Carolina Aquarium, 374 Airport Road, Manteo, NC.

13. Thursday, September 3, 1998, 7 p.m.—Duke University Marine Lab, 135 Duke Marine Lab Road, Beaufort, NC.

The hearings will be taped and the tapes will be filed as the official transcript of the hearings.

Special Accommodations

These hearings are physically accessible to people with disabilities. Requests for sign language interpretation or other auxiliary aids should be directed to Joanna Davis at the Council office at least 5 days prior to the hearing date.

Authority: 16 U.S.C. *et seq.*

Dated: August 6, 1998.

Bruce C. Morehead,

Acting Director, Office of Sustainable Fisheries, National Marine Fisheries Service.

[FR Doc. 98–21766 Filed 8–12–98; 8:45 am]

BILLING CODE 3510–22–F

Notices

Federal Register
Vol. 63, No. 156
Thursday, August 13, 1998

This section of the FEDERAL REGISTER contains documents other than rules or proposed rules that are applicable to the public. Notices of hearings and investigations, committee meetings, agency decisions and rulings, delegations of authority, filing of petitions and applications and agency statements of organization and functions are examples of documents appearing in this section.

DEPARTMENT OF AGRICULTURE

Forest Service

Deschutes Provincial Interagency Executive Committee (PIEC), Advisory Committee

AGENCY: Forest Service, USDA.

ACTION: Notice of meeting.

SUMMARY: The Deschutes PIEC Advisory Committee will meet for a 2-day meeting on September 8 and 9, 1998 at the Bend-Fort Rock Ranger District, 1230 NE Third, Suite A–262 and Rock Springs Guest Ranch, 64201 Tyler Road, Bend, OR 97701. The first day will include a field trip which will begin at the Bend-Fort Rock Ranger District, 1230 NE Third, Suite A–262, Bend, OR 97701 at 9:00 AM. The second day will be a business meeting at Rock Springs Guest Ranch, 64201 Tyler Road, Bend, OR 97701 from 8:30 AM to 3:30 PM with a public forum from 3:00 to 3:30 PM. Business meeting agenda will include Rechartering the PAC, Awards Banquet, Recreation Fee Demo 1998, FERC Relicensing, Report on PAC Monitoring, Working Group Update. All Deschutes Province Advisory Committee meetings are open to the public.

FOR FURTHER INFORMATION CONTACT:

Mollie Chaudet, Province Liaison, USDA, Bend-Fort Rock Ranger District, 1230 N.E. 3rd, Bend, Oregon 97701, 541–383–4769.

Dated: August 4, 1998.

Sally Collins,

Deschutes National Forest Supervisor.

[FR Doc. 98–21774 Filed 8–12–98; 8:45 am]

BILLING CODE 3410–11–M

DEPARTMENT OF AGRICULTURE

Natural Resources Conservation Service

Notice of Intent To Request a Revision of a Currently Approved Information Collection

AGENCY: Natural Resources Conservation Service, United States Department of Agriculture.

ACTION: Notice and request for comments.

SUMMARY: In accordance with the Paperwork Reduction Act of 1995 (Pub. L. 104–13) and the Office of Management and Budget (OMB) regulations at 5 CFR Part 1320 (60 FR 44978, August 29, 1995), this notice announces the Natural Resources Conservation Service's (NRCS) intention to request a revision to a currently approved information collection, Long-Term Contracting (7 CFR 630) Conservation Programs.

DATES: Comments on this notice must be received by October 13, 1998.

ADDITIONAL INFORMATION OR COMMENTS: Contact Marcella Graham, Agency OMB Clearance Officer, Natural Resources Conservation Service, U.S. Department of Agriculture, Natural Resources Conservation Service, P.O. Box 2890, Washington, DC 20013–2890, (202) 720–5699.

SUPPLEMENTARY INFORMATION:

Title: Long-Term Contracting Conservation Programs.

OMB Number: 0578–0013.

Expiration Date of Approval: November 30, 1998.

Type of Request: To continue, with change, a currently approved collection for which approval will expire.

Abstract: The primary objective of the Natural Resources Conservation Service is to work in partnership with the American people to conserve and sustain our natural resources. The purpose of Long-Term Contracting information collection is to provide for programs to extend cost sharing and technical assistance through Long-Term Contracts to landowners and others for making land use changes and to install measures to conserve, develop, and utilize the soil, water, and related natural resources on their lands. Federal financial and technical assistance is based on a conservation plan which is made a part of an agreement or contract for a period of time of no less than 5 years, nor anymore than 15 years. Under the terms of the agreement, the participant agrees to apply, or arrange to apply, the conservation treatment specified in the conservation plan. In return for this agreement, Federal cost-share payments are made to the land user, or third party, upon successful application of the conservation treatment.

Information collected is used by the NRCS to ensure the proper utilization of program funds. The *NRCS–LTP–001* or the *CCC–1250* is the initial documents used by USDA program participants to indicate their desire to participate in one of the programs (7 CFR 622.20, 7 CFR 624.9, 7 CFR 636.5, 7 CFR 752.5, and 7 CFR 1467.5). The *NRCS–LTP–002* or the *CCC–1251* is used by USDA participants to acknowledge their agreement to comply with the terms and conditions of the conservation plan for which they will receive cost–share assistance (7 CFR 622.3, 7 CFR 624.10, 7 CFR 636.8, 7 CFR 752.8, and 7 CFR 1467.7(c)). The *NRCS–LTP–011* or *CCC–1252, NRCS–LTP–11A* or *CCC–1252A, NRCS–LTP–11B* or *CCC–1252B, NRCS–LTP–11BE, NRCS–LTP–11E, NRCS–LTP–12 or CCC–1253,* and the *NRCS–LTP–12E* are used to record conservation treatment decisions made between eligible participants and USDA for a specified period of time, including practice/system operation and maintenance requirements for the applicable conservation program (7 CFR 622.3(c), 7 CFR 624.3(b), 7 CFR 631.10, 7 CFR 632.21, 7 CFR 634.23, 7 CFR 636.7, 7 CFR 701.16, 7 CFR 701.40, 7 CFR 702.7, 7 CFR 752.7, 7 CFR 1410.22, and 7 CFR 1467.11). The *NRCS–LTP–13* is used to record progress in applying the conservation plan, as well as needs for revision or modification of the conservation plan, and any need for follow-up assistance (7 CFR 622.3(c), 7 CFR 624.4, 7 CFR 631.22, 7 CFR 632.23, 7 CFR 634.27(i), 7 CFR 636.2(c), 7 CFR 701.24, 7 CFR 701.43, 7 CFR 702.21, 7 CFR 752.13, 7 CFR 1410.55, and 7 CFR 1467.14). The *NRCS–LTP–20* or *CCC–1255,* the Warranty Easement Deed, is the basic document used by a landowner to grant and convey to NRCS an easement with appurtenant rights of access to the easement area (7 CFR 1467.10). The *NRCS–LTP–20A* or the *CCC–1255A,* the Option to Purchase is the equivalent of a real estate option

contract for purchasing land (7 CFR 1467.8). The *NRCS–LTP–21* or *CCC–1256*, the Subordination Agreement and Limited Lien Waiver is used to subordinate mortgages and obtain limited lien waivers, when applicable, to the United States with respect to any and all interests of the subordinating party in, or related to, the easement area (7 CFR 1467.10(c). The *NRCS–LTP–24* or *CCC–1257*, the Notification of Intent to Continue, is used by program applicants who have been notified of funding approval to indicate his/her intent to continue in the program (7 CFR 1467.7(b). NRCS will ask for 3-year OMB approval within 60 days of submitting the request.

Estimate of Burden: Public reporting burden for this collection of information is estimated to average 0.19 hours per response.

Respondents: Farms, individuals, or households, or State, local, or Tribal governments.

Estimated Number of Respondents: 893,770.

*Estimated Total Annual Burden on Respondents: 1*70,109.

Copies of this information collection and related instructions can be obtained without charge from Marcella Graham, the Agency OMB Clearance Officer, at (202) 720–5699.

Comments: Comments are invited on: (a) whether the proposed collection of information is necessary for the proper performance of the functions of the agency, including whether the information will have practical utility; (b) the accuracy of the agency's estimate of burden of the proposed collection of information, including the validity of the methodology and assumptions used; (c) ways to enhance the quality, utility, and clarity of the information to be collected; and (d) ways to minimize the burden of the collection of information on those who are to respond, such as through the use of appropriate automated, electronic, mechanical, or other technologic collection techniques or other forms of information technology. Comments may be sent to: Marcella Graham, Agency OMB Clearance Officer, U.S. Department of Agriculture, Natural Resources Conservation Service, P.O. Box 2890, Washington, DC 20013–2890.

All responses to this notice will be summarized and included in the request for OMB approval.

All comments will also become a matter of public record.

Signed at Washington, DC on August 6, 1998.

Gary R. Nordstrom,

Acting Chief, Natural Resources Conservation Service.

[FR Doc. 98–21665 Filed 8–12–98; 8:45 am]

BILLING CODE 3410–16–P

DEPARTMENT OF AGRICULTURE

Natural Resources Conservation Service

Buena Vista Watershed, City of Buena Vista and Rockbridge County, Virginia

AGENCY: U.S. Department of Agriculture, Natural Resources Conservation Service.

ACTION: Notice of intent to prepare an environmental impact statement.

SUMMARY: Pursuant to Section 102(2)(C) of the National Environmental Policy Act of 1969; the Council on Environmental Quality Guidelines (40 CFR Part 1500); and the Natural Resources Conservation Service Guidelines (7 CFR Part 650); the Natural Resources Conservation Service (NRCS), U.S. Department of Agriculture, gives notice that an environmental impact statement (EIS) is being prepared for the Buena Vista Watershed, City of Buena Vista and Rockbridge County, Virginia

A draft EIS will be prepared and circulated for review by agencies and the public. The NRCS invites participation and consultation of agencies and individuals that have special expertise, legal jurisdiction, or interest in the preparation of the draft EIS.

DATES: A scoping meeting will be held at 10:00 a.m. on September 3, 1998 in the Library located at 138 South Main Street in Lexington, Virginia to determine the scope of the evaluation of the proposed action. Interested individuals, organizations and agencies are invited to attend.

Written comment on the scope of the EIS and requests for copies of the draft or final EIS should be directed to Ms. M. Denise Doetzer at the address below. Written comments should be postmarked by September 18, 1998 to ensure consideration. Comments received after this date will be considered to the extent practicable.

FOR FURTHER INFORMATION CONTACT: Ms. M. Denise Doetzer, State Conservationist, Natural Resources Conservation Service, 1606 Santa Rosa Road, Suite 209, Richmond, VA 23229–5014, telephone number: (804) 287–1691.

SUPPLEMENTARY INFORMATION: The environmental assessment for this federally assisted action was distributed for interagency and public comment on April 1, 1998. The comment deadline was May 18, 1998. Comments have been incorporated into the document. Based on the environmental assessment and the comments received during the review of the draft plan, the environmental impacts of the proposed project will not cause significant local, regional, or national impacts on the environment. However, the cost of the proposed solutions exceeds $5 million and therefore, must be approved by the appropriate Congressional Committees. NRCS regulations require an EIS for ''projects requiring Congressional action'' accoring to 7 CFR Part 650.7(a)(2). Therefore, an EIS is required for this project. As a result of this statute, Ms. M. Denise Doetzer, State Conservationist, has determined that the preparation and review of an EIS is needed for this project.

The project concerns a plan to reduce flood damages caused by four streams (Chalk Mine Run, Indian Gap Run, Noel's Run and Pedlar Gap Run) that run through the City of Buena Vista. Alternatives under consideration to reach this objective include both structural and nonstructural measures from a variety of funding sources.

The nonstructural measures to be implemented within Buena Vista are a part of a Federal Emergeny Management Agency effort to acquire, relocate or elevate some structures located in the floodplain. Some channel improvement measures are planned by the City using Community Block Grant Funding. These efforts are not part of the recommended actions in the watershed plan being evaluated by NRCS.

The EIS will evaluate the environmental impacts associated with the measures needed to further reduce flood damages within the watershed. The flood mitigation measures being considered include debris basins, replace/remove/enlarge culverts and bridges, construct floodwalls and earthen berms, increase the stream channel capacity, and replace railroad bridges.

The City of Buena Vista and the Natural Bridge Soil and Water Conservation District submitted an Application for Federal Assistance to the Virginia Soil and Water Conservation Board in May 1993. The application was given a priority 1 rating and was approved in July 1993. The application was then referred to NRCS for response. This study is being performed under the authorization provided in the Watershed Protection and Flood Prevention Act of the 83rd Congress (Public Law 83–566, as

amended). That legislation authorizes the Secretary of Agriculture to cooperate with other federal, state, and local agencies in the investigation of watersheds and river basins to develop coordinated programs.

(This activity is listed in the Catalog of Federal Domestic Assistance under No. 10.904—Watershed Protection and Flood Prevention—and is subject to the provisions of Executive Order 12372 which requires intergovernmental consultation with State and local officials)

Dated: August 5, 1998.

M. Denise Doetzer,

State Conservationist.

[FR Doc. 98–21772 Filed 8–12–98; 8:45 am]

BILLING CODE 3210–16–M

DEPARTMENT OF COMMERCE

Bureau of Export Administration

Submission for OMB Review; Comment Request

The Department of Commerce (DOC) has submitted to the Office of Management and Budget (OMB) for clearance the following proposal for collection of information under provisions of the Paperwork Reduction Act (44 U.S.C. Chapter 35).

Agency: Bureau of Export Administration (BXA).

Title: National Defense Authorization Act (NDAA).

Agency Form Number: BXA–742R, BXA–742S.

OMB Approval Number: 0694–0107.

Type of Request: Extension of a currently approved collection of information.

Burden: 725 hours.

Average Time Per Response: 52.5 to 67.5 minutes per response.

Number of Respondents: 1,150 respondents.

Needs and Uses: This collection of information is required as the result of the amending of the Export Administration Regulations (15 CFR parts 730–799) (EAR) by revising the (EAR) requirements for exports and reexports contained in Sections 1211–1215 of the National Defense Authorization Act (NDAA) for fiscal year 1998 (Pub L. 105–85, 111 Stat. 1629), signed by the President on November 18, 1997. The Bureau of Export Administration (BXA) needs the information in this collection to fulfill two requirements of the National Defense Authorization Act for Fiscal Year 1998 (NDAA). Those requirements are: (1) proposed exports and reexports of high performance computers to specific countries must be reviewed by enumerated government agencies prior to the export and (2) that the government conduct a ''post shipment verification'' of each high performance computer exported to those countries after November 17, 1997. Both of these requirements are new and were imposed by the Congress with the passage of the NDAA. To simplify the latter, BXA has developed a new form that will incorporate the relevant data elements and replace the written report, thereby standardizing the data format for the applicant, and enabling the use of information technology in the processing of the data.

Affected Public: Individuals, businesses or other for-profit institutions.

Respondent's Obligation: Mandatory.

OMB Desk Officer: Victoria Baecher-Wassmer (202) 395–5871.

Copies of the above information collection proposal can be obtained by calling or writing Linda Engelmeier, DOC Forms Clearance Officer, (202) 482–3272, Department of Commerce, Room 5327, 14th and Constitution Avenue, NW, Washington, D.C. 20230.

Written comments and recommendations for the proposed information collection should be sent within 30 days of publication of this notice to Victoria Baecher-Wassmer, OMB Desk Officer, Room 10202, New Executive Office Building, Washington, D.C. 20230.

Dated: July 28, 1998.

Linda Engelmeier,

Departmental Forms Clearance Officer, Office of the Chief Information Officer.

[FR Doc. 98–21752 Filed 8–12–98; 8:45 am]

BILLING CODE 3510–33–P

DEPARTMENT OF COMMERCE

Submission for OMB Review; Comment Request

DOC has submitted to the Office of Management and Budget (OMB) for clearance the following proposal for collection of information under the provisions of the Paperwork Reduction Act (44 U.S.C. chapter 35).

Agency: Bureau of the Census.

Title: United States Census 2000.

Form Number(s): D–1, D–1(E), D–1(E)SUPP, D–1(HF), D–1(UL), D–1A(UL), D–2, D–2(E), D–2(E)SUPP, D–2(HF), D–2(UL), D–2A(UL), D–10, D–13, D–15A, D–15B, D–20A, D–20B, D–21, D–23, D–806, D–5(L), D–5(L)(UL), D–9, D–9(UL), D–13(L), D–16A(L), D–16A(L)(UL), D–16B(L), D–16B(L)(UL), D–19A(L), D–19B(L), D–19C(L), D–5, D–5(UL), D–6, D–6(UL), D–6(ACR),D–7, D–7(UL), D–12, D–14, D–8A, D–8B, D–40, D–42.

Agency Approval Number: None.

Type of Request: New collection.

Burden: 26,761,200 hours when the Census is taken in Year 2000.

Number of Respondents: 106,200,000.

Avg Hours Per Response: Short form B 10 minutes, Long form B 38 minutes, Follow-up form B 8 minutes, Reinterview B 5 minutes.

Needs and Uses: The United States Constitution mandates that a census of the Nation's population and housing be taken every ten years. The Census Bureau's goal in Census 2000 is to take the most accurate and cost-effective census possible. The importance of an accurate decennial census cannot be overstated. Census data are used to reapportion the House of Representatives and redraw legislative district boundaries, ensuring that political representation is distributed accurately, and to determine funding allocations for the distribution of billions of dollars of federal and state funds each year. Census data tell us what we know about our country; they are the definitive benchmark for virtually all demographic information used by state, local, and tribal governments, policy makers, educators, journalists, and community and nonprofit organizations.

The strategic plan for Census 2000 includes four fundamental precepts:

Build partnerships at every stage of the process
Keep it simple
Make smart use of technology
Use statistical sampling

The current census design operations have been defined, planned, and scheduled to integrate all *four* precepts.

Affected Public: Individuals and households.

Frequency: One time.

Respondent's Obligation: Mandatory.

Legal Authority: Title 13, United States Code, Sections 141 and 193.

OMB Desk Officer: Nancy Kirkendall, (202) 395–7313.

Copies of the above information collection proposal can be obtained by calling or writing Linda Engelmeier, DOC Forms Clearance Officer, (202) 482–3272, Department of Commerce, room 5312, 14th and Constitution Avenue, NW, Washington, DC 20230.

Written comments and recommendations for the proposed information collection should be sent within 30 days of publication of this notice to Nancy Kirkendall, OMB Desk Officer, room 10201, New Executive Office Building, Washington, DC 20503.

Dated: August 10, 1998.

Linda Engelmeier,

Departmental Forms Clearance Officer, Office of the Chief Information Officer.

[FR Doc. 98–21791 Filed 8–12–98; 8:45 am]

BILLING CODE 3510–07–P

DEPARTMENT OF COMMERCE

Bureau of Export Administration

Action Affecting Export Privileges; Elham Abrishami; Order Denying Permission to Apply for or Use Export Licenses

In the Matter of: Elham Abrishami, 271 Morrsarrat Drive, Dublin, Ohio 43017.

On August 20, 1997, Elham Abrishami (Abrishami) was convicted in the United States District Court for the Southern District of Ohio, Eastern Division, on one count of violating the Export Administration Act of 1979, as amended (currently codified at 50 U.S.C.A. app. §§ 2401–2420 (1991 & Supp. 1998)) (the Act),[1] and one count of violating Section 38 of the Arms Export Control Act (currently codified at 22 U.S.C.A. § 2278 (1990 & Supp. 1998)) (AECA). Specifically, Abrishami was convicted of knowingly and willfully exporting and causing to be exported radio communication equipment to the United Arab Emirates, for transshipment of Iran, without first having obtained authorization from the Department of Commerce, and of knowingly and willfully attempting to export encryption modules from the United Arab Emirates, for transshipment to Iran, without first having obtained an export license or written authorization from the State Department.

Section 11(h) of the Act provides that, at the discretion of the Secretary of Commerce,[2] no person convicted of violating the Act or the AECA, or certain other provisions of the United States Code, shall be eligible to apply for or use any license, including any License Exception, issued pursuant to, or provided by, the Act or the Export Administration Regulations (currently codified at 15 CFR Parts 730–774 (1998)) (the Regulations), for a period of up to 10 years from the date of the conviction. In addition, any license issued pursuant to the Act in which such a person had any interest at the time of conviction may be revoked.

Pursuant to Sections 766.25 and 750.8(a) of the Regulations, upon notification that a person had been convicted of violating the Act or the AECA, the Director, Office of Export Services, in consultation with the Director, Office of Export Enforcement, shall determine whether to deny that person permission to apply for or use any license, including any License Exception, issued pursuant to, or provided by, the Act or the Regulations, and shall also determine whether to revoke any license previously issued to such a person.

Having received notice of Abrishami's conviction for violating the Act and the AECA, and following consultations with the Acting Director, Office of Export Enforcement, I have decided to deny Abrishami permission to apply for or use any license, including any License Exception, issued pursuant to, or provided by, the Act and the Regulations, for a period of 10 years from the date of her conviction. The 10-year period ends on August 20, 2007. I have also decided to revoke all licenses issued pursuant to the Act in which Abrishami had an interest at the time of her conviction.

Accordingly, it is hereby

Ordered

I. Until August 20, 2007, Elham Abrishami, 271 Morrsarrat Drive, Dublin, Ohio 43017, may not, directly or indirectly, participate in any way, in any transaction involving any commodity, software or technology (hereinafter collectively referred to as ''item'') exported or to be exported from the United States, that is subject to the Regulations, or in any other activity subject to the Regulations, including, but not limited to:

A. Applying for, obtaining, or using any license, License Exception, or export control document;

B. Carrying on negotiations concerning, or ordering, buying, receiving, using, selling, delivering, storing, disposing of, forwarding, transporting, financing, or otherwise servicing in any way, any transaction involving any item exported or to be exported from the United States that is subject to the Regulations, or in any other activity subject to the Regulations; or

c. Benefiting in any way from any transaction involving any item exported or to be exported from the United States that is subject to the Regulations, or in any other activity subject to the Regulations.

II. No person may do, directly or indirectly, any of the following:

A. Export or reexport to or in behalf of the denied person any item subject to the Regulations;

B. Take any action that facilitates the acquisition or attempted acquisition by the denied person of the ownership, possession, or control of any item subject to the Regulations that has been or will be exported from the United States, including financing or other support activities related to a transaction whereby the denied person acquires or attempts to acquire such ownership, possession or control;

c. Take any action to acquire from or to facilitate the acquisition or attempted acquisition from the denied person of any item subject to the Regulations that has been exported from the United States;

D. Obtain from the denied person in the United States any item subject to the Regulations with knowledge or reason to know that the item will be, or is intended to be, exported from the United States; or

E. Engage in any transaction to service any item subject to the Regulations that has been or will be exported from the United State and which is owned, possessed or controlled by the denied person, or service any item, of whatever origin, that is owned, possessed or controlled by the denied person if such service involves the use of any item subject to the Regulations that has been or will be exported from the United States. For purposes of this paragraph, servicing means installation, maintenance, repair, modification or testing.

III. After notice and opportunity for comment as provided in Section 766.23 of the Regulations, any person, firm, corporation, or business organization related to Abrishami by affiliation, ownership, control, or position of responsibility in the conduct of trade or related services may also be subject to the provisions of this Order.

IV. This Order does not prohibit any export, reexport, or other transaction subject to the Regulations where the only items involved that are subject to the Regulations are the foreign-produced direct product of U.S.-origin technology.

V. This Order is effective immediately and small remain in effect until August 20, 2007.

VI. A copy of this Order shall be delivered to Abrishami. This Order shall be published in the **Federal Register**.

[1] The Act expired on August 20, 1994. Executive Order 12924 (3 C.F.R., 1994 Comp. 917 (1995)), extended by Presidential Notices of August 15, 1995 (3 CFR, 1995 Comp. 501 (1996)), August 14, 1996 (3 CFR , 1996 Comp. 298 (1997)), and August 13 1997 (62 FR 43629, August 15, 1997), continued the Export Administration Regulations in effect under the International Emergency Economic Powers Act (50 U.S.C.A. §§ 1701–1706 (1991 & Supp. 1998)) (IEEPA).

[2] Pursuant to appropriate delegations of authority, the Director, Office of Exporter Services, in consultation with the Director, Office of Export Enforcement, exercises the authority granted to the Secretary by Section 11(h) of the Act.

Dated: August 3, 1998.

Eileen M. Albanese,

Director, Office of Exporter Services.

[FR Doc. 98–21662 Filed 8–12–98; 8:45 am]

BILLING CODE 3510–DT–M

DEPARTMENT OF COMMERCE

Bureau of Export Administration

Action Affecting Export Privileges; Jack Allen Baugher; Order Denying Permission To Apply For or Use Export Licenses

In the Matter of: Jack Allen Baugher, 10503 Tieton Drive, Yakima, Washington 98908.

On December 19, 1997, Jack Allen Baugher (Baugher) was convicted in the United States District Court for the Eastern District of Washington, on two counts of violating the International Emergency Economic Powers Act (50 U.S.C.A. § § 1701–1706 (1991 & Supp. 1998)) (IEEPA) and two counts of violating Section 38 of the Arms Export Control Act (currently codified at 22 U.S.C.A. § 2778 (1990 & Supp. 1998)) (AECA). Specifically, Baugher was convicted of knowingly and willfully exporting and causing to be exported electronic stun guns to Mexico and the Philippines, without obtaining the required export licenses from the Department of Commerce, and of knowingly and willfully exporting and causing to be exported liquid pepper to Mexico and the Philippines, without obtaining the required written authorization from the State Department.

Section 11(h) of the Export Administration Act of 1979, as amended (currently codified at 50 U.S.C.A. app. § § 2401–2420 (1991 & Supp. 1998)) (the Act),[1] provides that, at the discretion of the Secretary of Commerce,[2] no person convicted of violating the IEEPA or the AECA, or certain other provisions of the United States Code, shall be eligible to apply for or use any license, including any License Exception, issued pursuant to, or provided by, the Act or the Export Administration Regulations (currently codified at 15 CFR Parts 730–774 (1998)) (the Regulations), for a period of up to 10 years from the date of the conviction. In addition, any license issued pursuant to the Act in which such a person had any interest at the time of conviction may be revoked.

Pursuant to Section 766.25 and 750.8(a) of the Regulations, upon notification that a person has been convicted of violating the IEEPA or the AECA, the Director, Office of Exporter Services, in consultation with the Director, Office of Export Enforcement, shall determine whether to deny that person permission to apply for or use any license, including any License Exception, issued pursuant to, or provided by, the Act or the Regulations, and shall also determine whether to revoke any license previously issued to such a person.

Having received notice of Baugher's conviction for violating the IEEPA and the AECA, and following consultations with the Acting Director, Office of Export Enforcement, I have decided to deny Baugher permission to apply for or use any license, including any License Exception, issued pursuant to, or provided by, the Act and the Regulations, for a period of eight years from the date of his conviction. The eight-year period ends on December 19, 2005. I have also decided to revoke all licenses issued pursuant to the Act in which Baugher had an interest at the time of his conviction.

Accordingly, it is hereby

Ordered

I. Until December 19, 2005, Jack Allen Baugher, 10503 Teiton Drive, Yakima, Washington 98908, may not, directly or indirectly, participate in any way, in any transaction involving any commodity, software or technology (hereinafter collectively referred to as ''item'') exported or to be exported from the United States, that is subject to the Regulations, or in any other activity subject to the Regulations, including, but not limited to:

A. Applying for, obtaining, or using any license, License Exception, or export control document;

B. Carrying on negotiations concerning, or ordering, buying, receiving, using, selling, delivering, storing, disposing of, forwarding, transporting, financing, or otherwise servicing in any way, any transaction involving any item exported or to be exported from the United States that is subject to the Regulations, or in any other activity subject to the Regulations; or

C. Benefiting in any way from any transaction involving any item exported or to be exported from the United States that is subject to the Regulations, or in any other activity subject to the Regulations.

II. No person may do, directly or indirectly, any of the following:

A. Export or reexport to or on behalf of the denied person any item subject to the Regulations;

B. Take any action that facilitates the acquisition or attempted acquisition by the denied person of the ownership, possession, or control of any item subject to the Regulations that has been or will be exported from the United States, including financing or other support activities related to a transaction whereby the denied person acquires or attempts or acquire such ownership, possession or control;

C. Take any action to acquire from or to facilitate the acquisition or attempted acquisition from the denied person of any item subject to the Regulations that has been exported from the United States;

D. Obtain from the denied person in the United States any item subject to the Regulations with knowledge or reason to know that the item will be, or is intended to be, exported from the United States; or

E. Engage in any transaction to service any item subject to the Regulations that has been or will be exported from the United States and which is owned, possessed or controlled by the denied person, or service any item, of whatever origin, that is owned, possessed or controlled by the denied person if such service involves the use of any item subject to the Regulations that has been or will be exported from the United States. For purposes of this paragraph, servicing means installation, maintenance, repair, modification or testing.

III. After notice and opportunity for comment as provided in Section 766.23 of the Regulations, any person, firm, corporation, or business organization related to Baugher by affiliation, ownership, control, or position or responsibility in the conduct of trade or related services may also be subject to the provisions of this Order.

IV. This Order does not prohibit any export, reexport, or other transaction subject to the Regulations where the only items involved that are subject to the Regulations are the foreign-produced direct product of U.S-origin technology.

V. This Order is effective immediately and shall remain in the effect until December 19, 2005.

VI. A copy of this Order shall be delivered to Baugher. This Order shall be published in the **Federal Register.**

[1] The Act expired on August 20, 1994. Executive Order 12924 (3 CFR 1994 Comp. 917 (1995)), extended by Presidential Notices of August 15, 1995 (3 CFR, 1995 Comp. 501 (1996)), August 14, 1996 (3 CFR 1996 Comp. 298 (1997)), and August 13, 1997 (62 FR 43669, August 15, 1997), continued the Export Administration Regulations in effect under the IEEPA.

[2] Pursuant to appropriate delegations of authority, the Director, Office of Exporter Services, in consultation with the Director, Office of Export Enforcement, exercise the authority granted to the Secretary by Section 11(h) of the Act.

Dated: August 3, 1998.

Eileen M. Albanese,

Director, Office of Exporter Services.

[FR Doc. 98–21661 Filed 8–12–98; 8:45 am]

BILLING CODE 3510–DT–M

DEPARTMENT OF COMMERCE

International Trade Administration

[A–428–803]

Industrial Nitrocellulose From Germany; Final Results of Antidumping Duty Administrative Review

AGENCY: Import Administration, International Trade Administration, Department of Commerce.

ACTION: Notice of final results of antidumping duty administrative review of industrial nitrocellulose from Germany.

SUMMARY: On April 9, 1998, the Department of Commerce published its preliminary results of administrative review of the antidumping duty order on industrial nitrocellulose from Germany for the period July 1, 1996, through June 30, 1997 (63 FR 17364). The Department of Commerce has now completed its administrative review in accordance with section 751(a) of the Tariff Act of 1930. For information on the assessment of antidumping duties for the reviewed company, and for all non-reviewed companies, see the Final Results of Review section of this notice. This review covers imports of industrial nitrocellulose from one producer, Wolff Walsrode AG.

We gave interested parties an opportunity to comment on our preliminary results. We have based our analysis on the comments received and have changed the results from those presented in the preliminary results of review.

EFFECTIVE DATE: August 13, 1998.

FOR FURTHER INFORMATION CONTACT: Todd Peterson or Zev Primor, AD/CVD Enforcement Office 4, Import Administration, International Trade Administration, U.S. Department of Commerce, 14th Street and Constitution Avenue, N.W., Washington, D.C. 20230; telephone (202) 482–4195, and 482–4114, respectively.

SUPPLEMENTARY INFORMATION:

Background

On April 9, 1998, the Department of Commerce (the Department) published in the **Federal Register** its preliminary results of the administrative review of the antidumping duty order on industrial nitrocellulose from Germany for the period July 1, 1996, through June 30, 1997 (63 FR 17364). The Department has now completed this administrative review, in accordance with section 751(a) of the Tariff Act of 1930, as amended (the Act).

The Applicable Statute and Regulations

Unless otherwise indicated, all citations to the statute are references to the provisions effective January 1, 1995, the effective date of the amendments made to the Tariff Act of 1930 (the Act) by the Uruguay Round Agreements Act (URAA). In addition, unless otherwise indicated, all citations to the Department of Commerce's (the Department's) regulations refer to the regulations as stated in 62 FR 27296, May 19, 1997.

Scope of the Review

Imports covered by this review are shipments of industrial nitrocellulose (INC) from Germany. INC is a dry, white, amorphous synthetic chemical with a nitrogen content between 10.8 and 12.2 percent, and is produced from the reaction of cellulose with nitric acid. INC is used as a film-former in coatings, lacquers, furniture finishes, and printing inks. The scope of this order does not include explosive grade nitrocellulose, which has a nitrogen content of greater than 12.2 percent. INC is currently classified under Harmonized Tariff Schedule (HTS) subheading 3912.20.00. White the HTS item number is provided for convenience and Customs purposes, the written description remains dispositive as to the scope of the product coverage. The review period is July 1, 1996 through June 30, 1997.

Analysis of Comments Received

We gave interested parties an opportunity to comment on the preliminary results. We received comments from the respondent, Wolff Walsrode (Wolff) and the petitioner, Hercules Incorporated.

Comment 1: Respondent argues that the Department used Wolff's budgeted operating result from its financial statement rather than its actual operating result in calculating Wolff's constructed export price (CEP) profit ratio. Petitioner did not comment.

Department's Position: The Department agrees with respondent that Wolff's actual operating result should be used in calculating Wolff's constructed export price profit ratio because the actual operating result is the more accurate than the budgeted operating results. The Department has corrected this error.

Comment 2: Respondent argues that the Department inadvertently included all contemporaneous home market sales in the computer program's calculation of weighted-averaged normal values rather than selecting the sales during the most contemporaneous month as required by section 351.414(e)(2)(i) of the Department's regulations. Petitioner argues that this error only affects five U.S. sales and would be corrected in all but one instance when the Department corrects the product coding, as requested by the respondent. *See* comment six.

Department's Position: The Department has utilized respondent's computer programming language as outlined in their case brief for the final results. The Department notes that the computer program does calculate the weighted-average normal values during the most contemporaneous month as required by section 351.414(e)(2)(i). However, while the revised programming altered variable names, it did not change the results of the program.

Comment 3: Respondent argues that the Department inadvertently failed to add U.S. freight revenue in calculating the net CEP price. Petitioner did not comment.

Department's Position: The Department agrees with the respondent and has corrected this error.

Comment 4: Respondent argues that the Department inadvertently failed to deduct the CEP offset from the normal value of home market sales matched to U.S. CEP sales with no commissions. Respondent also argues that the Department failed to deduct the commission offset from normal value of home market sales matched to U.S. sales with commissions. Petitioner did not comment.

Department's Position: The Department agrees with respondent and has corrected these programming errors.

Comment 5: Respondent argues that the Department should calculate one assessment rate for transmittal to the U.S. Customs Service because Customs cannot readily determine whether a particular importation is an EP or CEP sale. Petitioner agrees with respondent, but wants to ensure that the entire amount of antidumping duty calculated by the Department is collected by Customs.

Department's Position: The Department agrees with respondent that in this instance there should be one rate per importer and has corrected this error.

Comment 6: Petitioner contends that the Department incorrectly used the SAS function, COMPRESS, in the

creation of the model matching hierarchy. As a result, the variables were improperly sorted. In addition, petitioner claims that the Department incorrectly defined three product characteristic codes in the model match program. Respondent agrees that there is a programming error in the model matching hierarchy, but disagrees with petitioner's suggested solution. Respondent argues that the problem with the model match program identified by the petitioner is not solely caused by the COMPRESS code, but also by the Department's methodology in hand-coding viscosity levels in the program. Respondent argues that in addition to petitioner's recommendation, the Department must also alter the U.S. viscosity hand-coding section of the program to result in a more accurate model matching.

Department's Position: The Department agrees with both petitioner and respondent that there is a programming error with three models in the matching hierarchy. The Department has corrected the programming errors in the model matching hierarchy and the error in the hand coding section. However, the Department disagrees with petitioner and that the SAS function, COMPRESS, caused an improper sorting of models. The compress function is used to minimize space and has no impact on the model matching hierarchy.

Comment 7: Petitioner contends that only sales to the United States within the 12-month review period should be included in the model match program, and that the month code should be corrected. Respondent did not comment.

Department's Position: The Department agrees with petitioner and has corrected these programming errors.

Final Results of the Review

As a result of the comments received we have revised our analysis and determine that the following margins exist for the period July 1, 1996, through June 30, 1997:

Manufacturer/exporter	Margin (percent)
Wolff Walsrode AG (WWAG) ...	7.18

The Department shall determine, and the Customs Service shall assess, antidumping duties on all appropriate entries. Individual differences between normal value and export price may vary from the percentages stated above. We have calculated a company-specific duty assessment rate based on the ratio of the total amount of antidumping duties calculated for the examined sales to the total entered value of the same sales. The rate will be assessed uniformly on all entries of that particular company made during the POR. The Department will issue appraisement instructions directly to the Customs Service.

Furthermore, the following deposit requirements will be effective for all shipments of industrial nitrocellulose from Germany, entered, or withdrawn from warehouse, for consumption on or after the publication date of the final results of this administrative review, as provided by section 751(a)(1) of the Act: (1) the cash deposit rates for the reviewed company will be the rate for the firm as stated above; (2) if the exporter is not covered in this review, or the original investigation, but the manufacturer is, the cash deposit rate will be the rate established for the most recent period for the manufacturer of the merchandise; (3) if the exporter is not a firm covered in this review, previous reviews, or the original LTFV investigation, but the manufacture is, the cash deposit rate will be the rate established for the most recent period for the manufacturer of the merchandise; and (4) for all other producers and/or exporters of this merchandise, the cash deposit rate will be 3.84 percent, the ''all others'' rate from the LTFV investigation. These cash deposit requirements, when imposed, shall remain in effect until publication of the final results of the next administrative review.

This notice serves as a final reminder to importers of their responsibility under 19 CFR 351.402(f) to file a certificate regarding the reimbursement of antidumping duties prior to liquidation of the relevant entries during this review period. Failure to comply with this requirement could result in the Secretary's presumption that reimbursement of antidumping duties occurred and the subsequent assessment of double antidumping duties.

This notice also serves as the only reminder to parties subject to administrative protective order (APO) of their responsibility concerning the disposition of proprietary information disclosed under APO. Timely notification of return/destruction of APO materials or conversion to judicial protective order is hereby requested. Failure to comply with the terms of an APO is a sanctionable violation.

This administrative review and notice are in accordance with sections 751(a)(1)(B) and 777(i)(1) of the Act.

Dated: August 6, 1998.

Robert S. LaRussa,

Assistant Secretary for Import Administration.

[FR Doc. 98–21789 Filed 8–12–98; 8:45 am]

BILLING CODE 3510–DS–M

DEPARTMENT OF COMMERCE

International Trade Administration

A–570–825

Sebacic Acid From the People's Republic of China; Final Results of Antidumping Duty Administrative Review

AGENCY: Import Administration, International Trade Administration, Department of Commerce

ACTION: Notice of final results of antidumping duty administrative review of sebacic acid from the People's Republic of China

SUMMARY: On April 9, 1998, the Department of Commerce (the Department) published the preliminary results of its administrative review of the antidumping duty order on sebacic acid from the People's Republic of China (PRC) (63 FR 17367). This review covers shipments of this merchandise to the United States during the period of July 1, 1996, through June 30, 1997. We gave interested parties an opportunity to comment on our preliminary results. Based upon our analysis of the comments received we have changed the results from those presented in the preliminary results of the review.

EFFECTIVE DATE: August 13, 1998.

FOR FURTHER INFORMATION CONTACT: Brandon Farlander or Stephen Jacques, Import Administration, International Trade Administration, U.S. Department of Commerce, 14th and Constitution Avenue, N.W., Washington, D.C. 20230; telephone: (202) 482–0182 or (202) 482-1391, respectively.

APPLICABLE STATUTE AND REGULATIONS: Unless otherwise indicated, all citations to the statute are references to the provisions effective January 1, 1995, the effective date of the amendments made to the Tariff Act of 1930 (the Act) by the Uruguay Round Agreements Act (URAA). In addition, unless otherwise indicated, all citations to the Department's regulations are in reference to the regulations, codified at 19 CFR Part 351 (62 FR 27295, May 19, 1997).

SUPPLEMENTARY INFORMATION:

Background

The Department published in the **Federal Register** an antidumping duty

order on sebacic acid from the PRC on July 14, 1994 (59 FR 35909). On July 21, 1997, the Department published in the **Federal Register** (62 FR 38973) a notice of opportunity to request an administrative review of the antidumping duty order on sebacic acid from the PRC covering the period July 1, 1996, through June 30, 1997. On July 29, 1997, Tianjin Chemicals Import and Export Corporation (''Tianjin''), Guangdong Chemicals Import and Export Corporation (''Guangdong''), and Sinochem International Chemicals Company, Ltd. (''SICC'') requested that we conduct an administrative review. Also, on July 29, 1997, Tianjin requested partial revocation of the antidumping duty order on sebacic acid from the PRC. On July 30, 1997, in accordance with 19 CFR 351.213(b), Union Camp requested that we conduct an administrative review of Tianjin, Guangdong, SICC, and Sinochem Jiangsu Import and Export Corporation. We published a notice of initiation of this antidumping duty administrative review on August 28, 1997 (62 FR 45621). The Department is conducting this administrative review in accordance with section 751 of the Act. Sinochem Jiangsu was mailed a questionnaire on August 30, 1997 but did not respond.

On April 9, 1998, the Department of Commerce (the Department) published the preliminary results of its administrative review of the antidumping duty order on sebacic acid from the PRC (63 FR 17367, April 9, 1998). We received written comments from three exporters of the subject merchandise: Tianjin, Guangdong, and SICC (collectively, respondents). We also received comments from the petitioner, Union Camp Corporation.

On May 28, 1998, the Department informed parties that respondents' May 11, 1998 case brief, and petitioner's May 11, 1998 case brief and May 18, 1998 rebuttal brief, contained untimely new information, pursuant to 19 CFR 351.301(b)(2), which requires that factual information be submitted not later than 140 days after the last day of the anniversary month. This untimely new factual information was stricken from the record of this review. On June 12, 1998, the Department informed parties that respondents' May 29, 1998 case brief, May 18, 1998 rebuttal brief, and petitioner's June 1, 1998 rebuttal brief contained untimely new information that was stricken from the record of this review. On July 31, 1998, the Department informed parties that presentations in the June 10, 1998 public hearing contained untimely new factual information that was stricken from the record of this review.

Tianjin requested partial revocation of the antidumping duty order on sebacic acid from the PRC pursuant to 19 CFR 351.222(b). However, we have determined in these final results a margin of 1.09 percent for Tianjin, which is above the Department's de minimis standard of 0.5 percent. Therefore, we determine that Tianjin has not met the requirements for revocation.

Scope of Review

The products covered by this order are all grades of sebacic acid, a dicarboxylic acid with the formula $(CH_2)8(COOH)2$, which include but are not limited to CP Grade (500ppm maximum ash, 25 maximum APHA color), Purified Grade (1000ppm maximum ash, 50 maximum APHA color), and Nylon Grade (500ppm maximum ash, 70 maximum ICV color). The principal difference between the grades is the quantity of ash and color. Sebacic acid contains a minimum of 85 percent dibasic acids of which the predominant species is the C10 dibasic acid. Sebacic acid is sold generally as a free-flowing powder/flake.

Sebacic acid has numerous industrial uses, including the production of nylon 6/10 (a polymer used for paintbrush and toothbrush bristles and paper machine felts), plasticizers, esters, automotive coolants, polyamides, polyester castings and films, inks and adhesives, lubricants, and polyurethane castings and coatings.

Sebacic acid is currently classifiable under subheading 2917.13.00.00 of the Harmonized Tariff Schedule of the United States (HTSUS). Although the HTSUS subheading is provided for convenience and customs purposes, our written description of the scope of this proceeding remains dispositive.

This review covers the period July 1, 1996, through June 30, 1997, and four exporters of Chinese sebacic acid.

Analysis of Comments Received

Comment 1: Surrogate value for 2-octanol (capryl alcohol). 1 (A) Octanol value in Chemical Weekly (Bombay, India). Petitioner argues that the octanol value in Chemical Weekly is for 1-octanol and not 2-octanol or 2-ethylhexanol. Petitioner questions the reliability of the letter from the editor of Chemical Weekly which was submitted by respondents and used by the Department for the preliminary results. The letter states that ''the octanol price referred by you corresponds to the more common 2-octanol (2 ethylhexanol).'' *See Preliminary Results of Antidumping Duty Administrative Review; Sebacic Acid from the PRC* 63 FR 17371 (April 9, 1998) and *Analysis Memorandum for the Preliminary Results of the 1996/1997 Review*, April 2, 1998, at Attachment 5. Petitioner contends that because respondents failed to provide for the record the original inquiry letter sent to the editor of Chemical Weekly, there is no evidence on the record to indicate whether the octanol price referred to in the inquiry letter to the editor corresponds to the octanol price in the Chemical Weekly. In addition, petitioner argues that there is no evidence on the record to indicate that the Chemical Weekly editor is sufficiently familiar with the chemical composition of the octanol product published in Chemical Weekly to declare that it is 2-octanol (2-ethylhexanol).

Respondents maintain that the Department correctly did not use a surrogate value for 1-octanol for the margin calculations (as suggested by petitioner), because the octanol value from the Chemical Weekly is for 2-ethylhexanol, which is another type of octanol, is the best available information.

Respondents argue that it is clear that the editor of Chemical Weekly was referring in his letter to the price quote for octanol in his own publication, and that the editor is knowledgeable about the price quotes for the various chemicals found in the Indian market. Respondents contend that the Chemical Weekly octanol price quote is for 2-ethylhexanol, which they assert is comparable in use and in value to 2-octanol. (See (B) below.)

Department's Position: 1 (A) Octanol value in Chemical Weekly (Bombay, India). We disagree with petitioner. Respondents submitted a letter written by the editor of Chemical Weekly stating that the reference to the octanol value in Chemical Weekly refers to 2-ethylhexanol, which is a type of octanol. *See* Attachment V of respondent's December 4, 1997 *PAPI submission* and Analysis Memorandum for the Preliminary Results of the 1996/1997 Review, April 2, 1998, at Attachment 5. Furthermore, contrary to petitioner's argument, respondents have placed a copy of the inquiry letter to the editor of Chemical Weekly on the record as an attachment to its rebuttal brief pursuant to the Department's request for this information. *See* Attachment to respondents' June 16, 1998 rebuttal brief. Finally, there is no evidence on the record suggesting that the editor of Chemical Weekly is unfamiliar with the basis of the values reported in his own publication. Therefore, based on the

above information, and absent any substantiated record evidence to the contrary, the Department determines that the octanol value from Chemical Weekly is for 2-ethylhexanol.

1 (B) Comparability between 1-octanol, 2-octanol, and 2-ethylhexanol. Petitioner argues that 2-ethylhexanol, which the Department used as a surrogate value for 2-octanol, is not a comparable product to 2-octanol based on evidence on the record. Petitioner asserts that the Court of International Trade (''CIT''), in both *Union Camp Corp.* v. *United States*, 941 F. Supp. 108, 113 (1996) and *Union Camp Corp.* v. *United States*, No. 97–03–00483, Slip Op. 98–38, (Ct. Int'l Trade, March 27, 1998), held that the Department's use of 1-octanol to value 2-octanol, based on its determination that 1-octanol was comparable to 2-octanol, was ''unsupported by substantial evidence on the record and not in accordance with law.'' *See* petitioner's June 1, 1998 case brief at 2–3. Also, petitioner argues that there is no substantial evidence on the record to indicate that 2-ethylhexanol is comparable to 2-octanol, which is a subsidiary product produced as a result of the Chinese sebacic acid production process. In addition, petitioner asserts that 2-ethylhexanol is a form of 1-octanol with a chemical formula of CH3(CH2)6CH2OH, which is different from 2-octanol's chemical formula of CH3(CH2)5CH2OCH3. Petitioner further alleges that the uses for 2-ethylhexanol and 2-octanol differ. In this point, petitioner notes that *Hawley's Condensed Chemical Dictionary, 12th ed.* (''Hawley's'') lists the following uses for 1-octanol: ''perfumery, cosmetics, organic synthesis, solvent manufacture of high-boiling esters, antifoaming agent, flavoring agent,'' page 848. Hawley's lists the following uses for 2-octanol: ''solvent, manufacture of plasticizers, wetting agents, foam control agents, hydraulic oils, petroleum additives, perfume intermediaries, masking of industrial odors.'' *Id.* at 848. Therefore, petitioner's argue that 2-ethylhexanol is not comparable to 2-octanol.

Respondents contend that the Chemical Weekly octanol price quote is for 2-ethylhexanol, and it is comparable in use and in value to 2-octanol. Respondents argue that 2-ethylhexanol and 2-octanol are both plasticizer-range alcohol chemicals that can be used interchangeably for certain applications and thus have some of the same uses. Respondents argue that an article (in their June 16, 1998 case brief, Exhibit 1) entitled, ''Alcohols, Higher Aliphatic,'' from *Kirk-Othmer Encyclopedia of Chemical Technology* (''Kirk-Othmer'') (1991), refers to all octanols as plasticizer-range alcohols and to 2-octanol as octanol. Respondents maintain that Hawley's indicates that all octanols, including 2-octanol and 2-ethylhexanol, are used interchangeably to produce esters which are used to produce plastics. Respondents also assert that the octanol price from Chemical Weekly, which respondents claim is 2-ethylhexanol, is priced lower in world markets than 2-octanol. Therefore, using the value of 2-ethylhexanol would not result in granting respondents an overstated by-product credit.

Respondents argue that the Department has not considered evidence on the record that 1-octanol and 2-octanol are interchangeable for certain uses and are used in the production of plasticizers, lube oils, and perfumes. Respondents request that the Department, in making its determination about which surrogate value to use in the final results, consider the uses and values of 1-octanol and 2-octanol, in light of the CIT's previous ruling that Commerce's determination that 1-octanol and 2-octanol were not comparable products solely because they have the same molecular structure. *See Union Camp Corp.* v. *United States,* No. 97–03–00483, Slip Op. 98–38, (Ct. Int'l Trade, March 27, 1998). Respondents contend that if the Department uses the petitioner's internal cost as the surrogate value, the petitioner, rather than the Department, will be controlling the dumping margins. Moreover, respondents will not know in the future whether a particular U.S. price will be considered a dumped price, because the petitioner's internal cost is not publicly available.

Petitioner asserts that there is no common usage for 1-octanol and 2-octanol listed in Hawley's. Petitioner argues that the Kirk-Othmer citation (the Alcohols, Higher Aliphatic article) submitted by respondents does not state that 2-octanol is referred to as an octanol or that all octanols are plasticizer range alcohols.

Department's Position: 1 (B) Comparability of 1-octanol, 2-octanol, and 2-ethylhexanol. We disagree with petitioner's contention that the CIT held in *Union Camp Corp.* v. *United States,* No. 97–03–00483, Slip Op. 98–38 (March 27, 1998), that 1-octanol and 2-octanol are not comparable. The CIT held that the Department's determination that 1-octanol and 2-octanol are comparable merchandise based solely on the fact the fact that the two chemicals have similar molecular structure was contrary to law because it was not based on a reasonable interpretation of the statute.

For the record of this review, however, we have substantial evidence on the record establishing that 2-ethylhexanol (also known as 2-ethylhexanol alcohol and octyl alcohol) and 2-octanol are comparable merchandise based on similar uses.

Respondents cite the Kirk-Othmer article, which states that chemical family members with 6–11 carbon atoms are known as plasticizer-range alcohols. *See* ''Alcohols, Higher Aliphatic,'' *Kirk-Othmer Encyclopedia of Chemical Technology* (''Kirk-Othmer'') at 865 (1991). All of the octanols, including 1-octanol, 2-octanol and 2-ethylhexanol, are plasticizer range alcohols with eight carbon atoms. Therefore, 1-octanol, 2-octanol and 2-ethylhexanol are physically similar.

Further, according to Kirk-Othmer, plasticizer-range alcohols are used primarily as ester derivatives in plasticizers and lubricants. *Id.* at 865. Respondents also submitted excerpts from Hawley's in their June 16, 1998 case brief demonstrating that 2-ethylhexanol, 1-octanol, and 2-octanol are comparable products with similar uses. Hawley's states that di(2-ethylhexyl) phthalate is created by mixing 2-ethylhexanol and phthalic anhydride and is used as a plasticizer for many resins and elastomers; thus, 2-ethylhexanol, when mixed with another chemical, is used as a plasticizer for many resins and elastomers. In addition, other data in Hawley's indicates that 1-octanol, 2-ethylhexanol and 2-octanol have similar uses.

Finally, in respondents' December 4, 1997 PAPI submission, Attachment 4, the *Chemical Marketing Reporter* (U.S.) (June 30, 1997) lists the following U.S. prices, in cents per pound: 2-ethylhexanol, $0.56; and 2-octanol, $0.68. These prices are evidence that 2-ethylhexanol may be priced lower than 2-octanol. Therefore, petitioner's argument that respondents are getting a higher co-product allocation with the use of the octanol value in *Chemical Weekly* is unfounded.

Based on the above information, we find that 2-ethylhexanol, 2-octanol, and 1-octanol are all comparable products. Therefore, given the Department's preference for publicly available surrogate values, we have concluded that the *Chemical Weekly* value for 2-ethylhexanol is the most appropriate surrogate value. Because the octanol value in *Chemical Weekly* is reported inclusive of taxes, we deducted taxes from the octanol value.

1 (C) Crude versus refined 2-octanol surrogate value. Petitioner asserts that

instead of the value from the *Chemical Weekly* used by the Department for the preliminary results, the Department should use the U.S. value for 2-octanol and deduct the inputs used to convert crude 2-octanol to refined 2-octanol. Petitioner argues that using the U.S. value for refined 2-octanol is consistent with the Department's practice of using a U.S. surrogate value, citing *Final Determination of Sales at Less Than Fair Value: Certain Cased Pencils from the People's Republic of China,* 59 FR 55625, 55630 (November 8, 1994) (''*Cased Pencils*''). Respondents allege that the petitioner is selling crude 2-octanol at a much higher value than the value reported to the Department. Petitioner counters that the source of this information is suspect, because the respondent's source is not a qualified expert nor are his opinions objective, since he is employed by a firm which imports subject merchandise.

Next, respondents argue that the Department should grant a by-product credit for refined 2-octanol because the Chinese sebacic acid producers only sell refined 2-octanol and the additional factors of production for the refining of the subsidiary product have been reported to the Department. Therefore if the Department decides not to use the octanol value from Chemical Weekly, the Department should use a refined price for 2-octanol, because the Chinese producers sell refined 2-octanol not crude 2-octanol. Also, respondents state that the additional factors for converting crude 2-octanol into refined 2-octanol are already included in the sebacic acid factors of production. Respondents maintain that the Department requires that the additional factors of production for refining a by-product or co-product must be included in the factors of production reported to the Department before a subsidiary by-product credit(s) can be granted.

Respondents argue that, in past cases, the Department has granted a by-product or co-product credit when: (1) the foreign producer proves that the by-product or co-product was sold, and (2) the additional factors of production for the refining of the subsidiary product are reported to the Department, citing: *Final Determination of Sales at Less Than Fair Value: Certain Cut-to-Length Carbon Steel Plate from the People's Republic of China,* 62 FR 61964, 61997 (November 20, 1997); *Final Results of Antidumping Duty Administrative Review and Determination Not to Revoke in Part: Silicon Metal from Brazil,* 62 FR 1954, 1964 (January 14, 1997); and *Final Determination of Sales at Less Than Fair Value: Strontium Nitrate from Italy,* 46 FR 25496 (May 7, 1981). Respondents also argue that the Department has used the sales price of the subsidiary product to determine whether it is a by-product or a co-product, citing: *Final Determination of Sales at Less Than Fair Value: Coumarin from the People's Republic of China,* 59 FR 66895, 66901 (December 28, 1994); *Final Determination of Sales at Less Than Fair Value: Brake Drums and Brake Rotors from the People's Republic of China,* 62 FR 9160, 9172 (February 28, 1997); *Magnesium Corp. of America v.* United States, 938 F. Supp. 885 (Ct. Int'l Trade, 1996). Respondents argue, that based on the above arguments, the Department should grant a by-product credit for refined 2-octanol and not crude 2-octanol.

Petitioner asserts that respondent should not receive a by-product credit for refined 2-octanol because respondents did not state in their submissions to the Department that the additional factors of production to convert crude 2-octanol to refined 2-octanol have already been included in the sebacic acid factors of production. Petitioner notes that there was no cite to the record and their review of respondents's Section D questionnaire response found no discussion of additional factors for refining 2-octanol. Therefore, petitioner maintains that, in the event that the Department uses the octanol value from Chemical Weekly, the Department should reduce the surrogate value by the purity levels at which each firm produces 2-octanol.

Department's Position: 1 (C) Crude versus refined 2-octanol surrogate value. We disagree with petitioner. Petitioner cites *Final Determination of Sales at Less Than Fair Value: Certain Cut-to-Length Carbon Plate from the People's Republic of China,* 62 FR 61964 (November 20, 1997), which states, ''(i)t is the Department's policy to only grant by-product credits for by-products actually produced directly as a result of the production process. A respondent must report the factors associated with the further refining of a by-product if it wishes to receive a credit for the further refined by-product.'' *Id.* at 61997. We note that, in contrast to petitioner's assertion, the sebacic acid factors of production used to calculate normal value (''NV'') already incorporate the relatively few factors of production (labor and energy) necessary to convert crude 2-octanol to refined 2-octanol. Production of sebacic acid results in the production of crude 2-octanol as a subsidiary product. The sebacic acid factors of production already include the factors of production used to refine 2-octanol and the other subsidiary products because the Chinese sebacic acid producers are unable to separate the additional factors of production used to convert crude subsidiary products into refined subsidiary products. For example, respondents state that, for producer Tianjin Zhong He, any additional factors of production to process crude 2-octanol to refine 2-octanol have already been reported to the Department and are included in the sebacic acid factors of production, because these additional factors of production cannot be separated from the sebacic acid factors of production. *See* respondents' January 20, 1998 supplemental questionnaire response at page 7. Moreover, at verification, we made certain that the additional factors of production to convert the crude subsidiary products into refined subsidiary products had either been reported to the Department or, if these additional factors of production had not been reported to the Department, we added these additional factors of production used to convert crude subsidiary products into refined subsidiary products to the reported sebacic acid factors of production. For example, we discovered at verification that the electricity used to convert crude glycerine into refined glycerine was not reported to the Department, but we added this additional electricity used to the reported sebacic acid factors of production. *See Verification report to the File,* page 13 (March 24, 1998).

Also, a more accurate by-product/co-product analysis results by using the refined value of 2-octanol rather than a crude value for 2-octanol. The Department's practice is to use the subsidiary product's sales value and factories' material yield amounts for determining the by-product/co-product analysis. In *Preliminary Determination of Sales at Less Than Fair Value and Postponement of Final Determination: Sebacic Acid from the People's Republic of China,* 59 FR 565, 569 (January 5, 1994), the Department ''used surrogate values from India for sebacic acid, glycerine, caproyl (sic) alcohol, and fatty acid to determine the relative value of each product based on the production on one metric ton of sebacic acid, as well as to determine the total value of one metric ton of sebacic acid.'' Since the Chinese producers sell refined 2-octanol, as confirmed at verification, and they do not sell crude 2-octanol, we believe that it is more appropriate to apply the surrogate value of refined 2-octanol in conducting the by-product/co-product analysis. Moreover, there is a publicly published sales price on which we can base a surrogate value for

refined 2-octanol, which is the octanol value (2-ethylhexanol) from Chemical Weekly.

1 (D) Treatment of 2-octanol by Chinese producers. Petitioner contends that both it and respondent producers Handan Fuyan Sebacic Acid Factory, Tianjin Zhong He, and Hengshui Dongfeng Chemical Factory all treat 2-octanol as a by-product in their respective accounting systems. Therefore, petitioner argues that the Department should also treat 2-octanol as a by-product, rather than a co-product. Petitioner asked the Department to verify how the Chinese producers treat 2-octanol but the Department chose not verify how the Chinese producers treat 2-octanol. Petitioner claims that because the Department used what petitioner suggests to be the value of 1-octanol to value 2-octanol in the preliminary results, the Department incorrectly determined 2-octanol to be a co-product rather than a by-product of the sebacic acid production process. Petitioner cites to *Preliminary Determination of Sales at Less Than Fair Value: Certain Cut-to-Length Carbon Steel Plate from the People's Republic of China* (''Carbon Steel Plate''), 62 FR 31972, 31977 (June 11, 1997), where the Department determined that slag is a by-product and not a co-product, using a U.S. value for slag when surrogate values for slag in India or Indonesia were aberrationally high.

Respondents argue that the Chinese producers do not view 2-octanol as a by-product and such characterization was made by their counsel and not by the producers themselves. Whether Chinese producers classify 2-octanol as a by-product or a co-product, respondents argue, is only relevant in the context of the Chinese accounting system and the relationship of the costs of 2-octanol to the actual Chinese sebacic acid production costs. Respondents contend that the Department determines whether 2-octanol is a by-product or co-product based on the surrogate values used and not based on recorded Chinese costs. Respondents dismiss petitioner's citation of the *Carbon Steel Plate* case because it addresses a specific by-product and provides no guidance as to whether a specific subsidiary product is either a by-product or a co-product.

Department's Position: 1 (D) Treatment of 2-octanol by Chinese producers. We disagree with petitioner. Petitioner cited *Carbon Steel Plate* to support their position that the Department should use the U.S. 2-octanol value instead of the allegedly high octanol value from Chemical Weekly, which petitioner suggests is 1-octanol. We disagree with petitioner's reliance on the above case because the evidence on the record confirms that the octanol value in Chemical Weekly is for 2-ethylhexanol.

We determine whether a subsidiary product is either a by-product or a co-product by comparing the subsidiary products' surrogate value to the value of the subject merchandise. If we determine that the surrogate value of the subsidiary product was significant relative to the surrogate value of subject merchandise, we treat the subsidiary product as a co-product; otherwise, we treat it as a by-product. We do not determine if a subsidiary product is a by-product or co-product based on how a particular company classifies the subsidiary product in its accounting records. Therefore, the treatment of 2-octanol by Chinese producers or by the U.S. producer of sebacic acid is irrelevant to the Department's analysis. This is precisely why the Department did not verify how the Chinese producer Hengshui classifies 2-octanol. In this case, the Department determines that 2-octanol is a co-product, because its value is significant relative to the surrogate value of sebacic acid.

1 (E) Use of an exact match. Petitioner argues that the Department should use the U.S. value of 2-octanol because it is an exact product match, instead of the octanol value (2-ethylhexanol) from the Chemical Weekly. Petitioner contends that past Department practice supports the use of a U.S. value for 2-octanol, in accordance with *Final Determination of Sales at Less Than Fair Value: Certain Cased Pencils from the People's Republic of China,* 59 FR 55625, 55630 (November 8, 1994) (''*Cased Pencils*''); *Union Camp Corp.* v. *United States,* 941 F. Supp. 108, 113 (1996) (''*Union Camp I*''); *Union Camp Corp.* v. *United States,* No. 97–03–00483, Slip Op. 98–38 (1998)(''*Union Camp II*''); and *Writing Instruments Mfrs. Assoc.* v. *United States,* 984 F. Supp. 629 (Ct. Int'l Trade, 1997), appeal docketed, Nos. 981178, 981292 (Fed. Cir., January 9, 1998 and January 21, 1998). In contrast, petitioner asserts that the product associated with the Chemical Weekly value (which petitioner suggests may be 1-octanol) is ''not even 'quite similar' to 2-octanol either chemically or commercially.''

Respondents argue that 2-ethylhexanol (which respondents contend to be the product with which the Chemical Weekly value is associated) and 2-octanol are comparable in both use and value and, therefore, the Department should use the surrogate value 2-ethylhexanol. Respondents note that 2-ethylhexanol is produced in the surrogate country. Respondents state that the Department should not use an identical surrogate value match from the U.S. for 2-octanol when a surrogate value for a comparable product is available from India, the chosen surrogate country used in this review.

Department's Position: 1 (E) Use of an exact match. We disagree with petitioner. In valuing factors of production, the Department used surrogate values from India. In accordance with section 773(c)(4) of the Act, the Department chose India as its surrogate, because it was most comparable to the PRC in terms of overall economic development based on per capita gross national product (GNP), the national distribution of labor, growth rate in per capita GNP, and because it was a significant producer of comparable merchandise (oxalic acid). As noted in Comment 4 below, both petitioner and respondent do not object to the Department's use of India as the surrogate country.

Section 773(c)(4) of the statute and 19 CFR 351.408 of the Department's regulations instruct the Department to value factors of production in an appropriate surrogate country. The Department rarely departs from use of a surrogate value from a country comparable to the NME in terms of overall economic development. *See Final Determination of Sales at Less Than Fair Value: Beryllium Metal and High Beryllium Alloys from the Republic of Kazakstan,* 62 FR 2648 (January 17, 1997). Surrogate values from countries at a similar level of development are considered to be the most appropriate and comparable for valuation of the factors in the similarly situated nonmarket economy country. While the Department may use values from the United States or other countries not at a comparable level of development for individual factors, its practice is to do so only if it cannot find those values in a comparable economy that produce comparable merchandise. *See Memorandum from David Mueller to Laurie Parkhill, Serbacic (sic) Acid from the People's Republic of China: Nonmarket Economy Status and Surrogate Country Selection,* March 4, 1996.

In this review, the Department was unable to locate an Indian value for 2-octanol in India, the surrogate country. Additionally, neither the petitioner nor the respondents were able to locate a specific Indian value for 2-octanol.

Petitioner cites *Cased Pencils* and the *Union Camp I* and *Union Camp II* court decisions to support their position that the Department should use the U.S. 2-octanol value instead of the octanol

value from Chemical Weekly for a surrogate value for 2-octanol. In *Cased Pencils*, the Department used a U.S. value (basswood) as the surrogate value that was ''most similar'' (*Id.* at 55630) instead of an Indian value (a basket category of woods which included jelutong) which was ''quite similar'' to the Chinese product (lindenwood) (*Id.* at 55629). In the *Cased Pencils* case, wood is the most significant input, and jelutong, which was in the basket category of Indian import values, was priced ''much higher than the most comparable wood.'' *Id.* at 55630. Because of these case specific reasons, the Department selected a U.S. surrogate value instead of a surrogate value from a country that is at a comparable level of economic development. We disagree with petitioner that the situation here is the same for selecting a surrogate value for 2-octanol. For the valuation of 2-octanol, India has been determined to be a significant producer of comparable merchandise and India is economically comparable to the People's Republic of China in the following: per capita gross domestic product (GDP), growth rate in per capita GDP, and the national distribution of labor. *See Analysis Memorandum for the Preliminary Results of the 1996/1997 Review*, April 2, 1998, page 2. Also, the octanol in Chemical Weekly (2-ethylhexanol) and 2-octanol are comparable merchandise. *See* Department's Position (B). Because we have a suitable value from India, the Department need not, and, indeed, should not, use a U.S. surrogate value.

Comment 2: Ministerial errors alleged by petitioner. Petitioner maintains that the Department should correct certain alleged ministerial errors discussed in the Department's *Analysis Memorandum for the Preliminary Results of the 1996/1997 Review*, April 2, 1998, namely: (1) for both Tianjin/Hengshui and SICC/Hengshui, profit was incorrectly calculated by multiplying profit by COM and not COP; (2) for the caustic soda surrogate value, taxes were incorrectly deducted twice; (3) for the method of allocation—coal sections, the amount of coal used was misallocated; (4) for ocean freight rates, the rates for sales 5, 6, 7, 9, and 10 for Tianjin were miscalculated; (5) for the glycerine and fatty acid by-products, by-product credits need to be adjusted by each producers respective purity level; (6) for the truck freight inflator, the WPI inflator used is incorrect; (7) for the surrogate value for castor seed cake, use the castor seed cake surrogate value from the Economic Times; (8) for water, include it as a factor of production; (9) for the coal inflator, correct the WPI inflator used to calculate coal and use the WPI inflator for the SICC/Hengshui coal calculation.

Respondents disagree with petitioner's assertions concerning the following alleged ministerial errors: (1) the profit calculation for SICC/Hengshui and Tianjin/Hengshui is calculated correctly; (5) use an average of the crude and refined glycerine values because the Department has already included the factors of production to convert crude glycerine to refined glycerine in the sebacic acid factors of production; and (8) water is not a separate factor of production since water is already included in the factory overhead calculations from the Reserve Bank of India for the chemical industry.

Department's Position: We agree with petitioner concerning alleged errors #2, 3, 4, 6, 7, 9 and have corrected these errors. We disagree with petitioner concerning alleged errors #1, 5, and 8. With respect to the calculation of profit as a percentage of COP (alleged error #1), profit was calculated as a percentage of COP for both Tianjin/Hengshui and SICC/Hengshui. *See Analysis Memorandum for the Preliminary Results of the 1996/1997 Review*, April 2, 1998, page 19i. With respect to the subsidiary products' surrogate value (alleged error #5), as mentioned in the Comment 1, (C) above, any additional factors of production to convert crude subsidiary products into refined subsidiary products are already included in the sebacic acid factors of production. Therefore, we are granting either by-product credits or co-product allocations based on the refined value and not a crude value of the subsidiary products. With respect to water being considered as a separate factor of production (alleged error #8), as we have established in many Chinese chemical dumping cases, such as in *Final Determination of Sales at Less Than Fair Value, Polyvinyl Alcohol from the People's Republic of China*, 61 FR 14058 (March 29, 1996); *Final Results of Antidumping Review for Sebacic Acid from the People's Republic of China*, 62 FR 65674 (December 15, 1997); *Final Results of Antidumping Review for Sebacic Acid from the People's Republic of China*, 62 FR 10530 (March 7, 1997), *Final Determination of Sales at Less Than Fair Value, Sulfur Dyes, Including Sulfur Vat Dyes from the People's Republic of China*, 58 FR 7537 (February 8, 1993); and *Final Results of Antidumping Review for Sulfanilic Acid from the People's Republic of China*, 62 FR 48597 (September 16, 1997), we did not value water as a separate factor of production but relied instead on factory overhead data that reflected water costs. *In Preliminary Determination of Sales at Less Than Fair Value: Freshwater Crawfish Tail Meat*, 62 FR 14392 (March 26, 1997), water was considered a separate factor of production because it is an agricultural product that uses a large amount of water to clean and boil the crawfish to extract the tail meat and to operate the freezer. For sebacic acid, as in the other Chinese chemical case mentioned above, water is considered part of the factory overhead data in the *Reserve Bank of India*. Therefore, we determine that, in this case, water is not a separate factor of production. While we agree with petitioner that, for Hengshui, taxes were incorrectly deducted twice for caustic soda (alleged error #2), we note that the result of this correction is a value of 5.5 Rs/kg and not the 4.43 Rs/kg value submitted by petitioner.

Comment 3: Ministerial errors alleged by respondents. Respondents maintain that the Department should correct certain ministerial errors discussed in the Department's *Analysis Memorandum for the Preliminary Results of the 1996/1997 Review*, April 2, 1998, namely: (1) for Hengshui, the plastic inner bag consumption per sebacic acid metric ton was overstated; (2) for Tianjin, the weighted-average margin was calculated incorrectly; and (3) ocean freight charge was calculated incorrectly by dividing by 17.5 metric tons instead of 18 metric tons for most of the shipments via a NME carrier.

Petitioner did not comment on respondents' ministerial error allegations.

Department's Position: We agree with respondents' allegations with regard to errors # 2, and 3, and have corrected these errors. With respect to the calculation of the amount of plastic bags consumed at Tianjin/Hengshui (alleged error #1), we disagree. We discovered at verification at Tianjin/Hengshui that sale #8 did not use any plastic bags but instead used only woven bags. Consequently, we divided the total plastic inner bag weight for all sales except sale #8 by the total weight of the sebacic acid shipped in plastic bags. Then, we added the weight of the woven bags used for shipment for sale #8 to the total weight of woven bags used for the shipment for all other sales except sale #8 and divided the total weight of the woven bags used by the total amount of sebacic acid shipped for all sales. *See Analysis Memorandum for the Preliminary Results of the 1996/1997 Review*, April 2, 1998, pages 2–3. Therefore, for the final results, we have made no further adjustment to

Hengshui's reported plastic inner bag consumption figure.

Comment 4: Use of India as the surrogate country. Respondent argues that petitioner has stated that India is not an appropriate surrogate country and that the Department should use either Japan or the United States as an appropriate surrogate country.

Petitioner states that it does not object to use of India as the surrogate country for this administrative review.

Department's Position: Since there is no argument as to which surrogate country to use, the Department will continue to use India as the surrogate country for this administrative review.

Final Results of Review

For Sinochem Jiangsu, which failed to respond to the questionnaire, we have not granted a separate rate and the country-wide rate will apply to all of its sales.

As a result of our review of the comments received, we have changed the results from those presented in our preliminary results of the review. Therefore, we determine that the following margins exists as a result of our review:

Manufacturer/exporter	Time period	Margin (percent)
Tianjin Chemicals I/E Corp	7/01/96–6/30/97	1.09
Sinochem International Chemicals Corp	7/01/96–6/30/97	0.11
Guangdong Chemicals I/E Corp	7/01/96–6/30/97	10.18
Country-Wide Rate	7/01/96–6/30/97	243.40
Sinochem Jiangsu I/E Corp	7/01/96–6/30/97	243.40

The Department shall determine, and the Customs Service shall assess, antidumping duties on all appropriate entries. The Department will issue appraisement instructions on each exporter directly to the Customs Service. For assessment purposes, we have calculated importer specific duty assessment rates for the merchandise based on the ratio of the total amount of antidumping duties calculated for the examined sales during the POR to the total entered value of sales examined during the POR.

Furthermore, the following cash deposit requirements will be effective upon publication of the final results of this administrative review for all shipments of the subject merchandise entered, or withdrawn from warehouse, for consumption on or after the publication date, as provided for by section 751(a)(1) of the Act: (1) for the reviewed companies named above which have separate rates (SICC, Tianjin, and Guangdong), the cash deposit rates will be the rates for those firms established in the final results of this administrative review; (2) for companies previously found to be entitled to a separate rate and for which no review was requested, the cash deposit rates will be the rate established in the most recent review of that company; (3) for all other PRC exporters of subject merchandise, the cash deposit rates will be the PRC country-wide rate indicated above; and (4) the cash deposit rate for non-PRC exporters of subject merchandise from the PRC will be the rate applicable to the PRC supplier of that exporter. These deposit rates, when imposed, shall remain in effect until publication of the final results of the next administrative review.

Notification of Interested Parties

This notice also serves as a final reminder to importers of their responsibility under 19 CFR 351.402(f) to file a certificate regarding the reimbursement of antidumping duties prior to liquidation of the relevant entries during this review period. Failure to comply with this requirement could result in the Secretary's presumption that reimbursement of antidumping duties occurred and the subsequent assessment of double antidumping duties.

This determination is issued and published in accordance with section 751(a)(1) and 777(i)(1) of the Act.

Dated: August 7, 1998.

Robert S. LaRussa,

Assistant Secretary for Import Administration.

[FR Doc. 98–21790 Filed 8–12–98; 8:45 am]

BILLING CODE 3510–DS–P

DEPARTMENT OF COMMERCE

International Trade Administration

Export Trade Certificate of Review

ACTION: Notice of Application to Amend Certificate.

SUMMARY: The Office of Export Trading Company Affairs (''OETCA''), International Trade Administration, Department of Commerce, has received an application to amend an Export Trade Certificate of Review (''Certificate''). This notice summarizes the proposed amendment and requests comments relevant to whether the Certificate should be issued.

FOR FURTHER INFORMATION CONTACT: Morton Schnabel, Director, Office of Export Trading Company Affairs, International Trade Administration, (202) 482–5131. This is not a toll-free number.

SUPPLEMENTARY INFORMATION: Title III of the Export Trading Company Act of 1982 (15 U.S.C. 4001–21) authorizes the Secretary of Commerce to issue Export Trade Certificates of Review. An Export Trade Certificate of Review protects the holder and the members identified in the Certificate from state and federal government antitrust actions and from private treble damage antitrust actions for the export conduct specified in the Certificate and carried out in compliance with its terms and conditions. Section 302(b)(1) of the Export Trading Company Act of 1982 and 15 CFR 325.6(a) require the Secretary to publish a notice in the **Federal Register** identifying the applicant and summarizing its proposed export conduct.

Request for Public Comments

Interested parties may submit written comments relevant to the determination whether an amended Certificate should be issued. If the comments include any privileged or confidential business information, it must be clearly marked and a nonconfidential version of the comments (identified as such) should be included. Any comments not marked privileged or confidential business information will be deemed to be nonconfidential. An original and five copies, plus two copies of the nonconfidential version, should be submitted no later than 20 days after the date of this notice to: Office of Export Trading Company Affairs, International Trade Administration, Department of Commerce, Room 1800H, Washington D.C. 20230. Information submitted by

any person is exempt from disclosure under the Freedom of Information Act (5 U.S.C. 552). However, nonconfidential versions of the comments will be made available to the applicant if necessary for determining whether or not to issue the certificate. Comments should refer to this application as ''Export Trade Certificate of Review, application number 84–9A012.'' Northwest Fruit Exporters' (''NFE'') original Certificate was issued on June 11, 1984 (49 FR 24581, June 14, 1984) and previously amended on May 2, 1988 (53 FR 16303, May 6, 1988); September 21, 1988 (53 FR 37628, September 27, 1988); September 20, 1989 (54 FR 39454, September 26, 1989); November 19, 1992 (57 FR 55510, November 25, 1992); August 16, 1994 (59 FR 43093); November 4, 1996 (61 FR 57850, November 8, 1996); and October 22, 1997 (62 FR 55783, October 28, 1997). A summary of the application for an amendment follows.

Summary of the Application

Applicant: Northwest Fruit Exporters (''NFE''), 105 South 18th Street, #227, Yakima, Washington 98901.

Contact: James R. Archer, Manager, Telephone: (509) 576–8004.

Application No.: 84–9A012.

Date Deemed Submitted: August 3, 1998.

Proposed Amendment: Northwest Fruit Exporters seeks to amend its Certificate to:

1. Add each of the following companies as a new ''Member'' of the Certificate within the meaning of section 325.2(1) of the Regulations (15 CFR 325.2(1)): E. Brown & Sons, Inc., Milton Freewater, Oregon; E.W. Brandt & Sons, Inc., Parker, Washington; Domex Marketing Co., Yakima, Washington; Dovex Export Company, Wenatchee, Washington; Henggeler Packing Co., Inc., Fruitland, Idaho; and Rainier Fruit Sales, Selah, Washington.

2. Delete the following companies as ''Members'' of the Certificate: Diamond Fruit Growers, Hood River, Oregon; Haas Fruit Co., Inc., Yakima, Washington; J.C. Watson Company, Parma, Idaho; Jenks Bros. Cold Storage, Inc., Royal City, Washington; Jones Orchards, Yakima, Washington; Naumes, Inc., Medford, Oregon; Oro Fruit Company, Oroville, Washington; Perham Fruit Corp., Wapato, Washington; Squaw Creek Ranch, Inc., Pateros, Washington; and The Apple House, Inc., Brewster, Washington.

3. Change the listing of the company name for each current ''Member'' cited in this paragraph to the new listing cited in this paragraph in parentheses as follows: Cascadian Fruit Shippers, Inc. (Custom Fruit Packers); Cubberley Packing Co., Inc. (CPC International Apple Co.); and Barbee Orchards/Obert Cold Storage (Obert Cold Storage).

Dated: August 7, 1998.

Morton Schnabel,

Director Office of Export Trading Company Affairs.

[FR Doc. 98–21703 Filed 8–12–98; 8:45 am]

BILLING CODE 3510–DR–P

DEPARTMENT OF COMMERCE

National Oceanic and Atmospheric Administration

[Docket No. 980212037–8142–02; I.D. 080498C]

RIN 0648–AJ87

Fisheries of the Exclusive Economic Zone off Alaska; Prohibited Species Donation Program

AGENCY: National Marine Fisheries Service (NMFS), National Oceanic and Atmospheric Administration (NOAA), Commerce.

ACTION: Notification of selection of an authorized distributor.

SUMMARY: NMFS announces the selection of Northwest Food Strategies (NFS) as an authorized distributor for purposes of distributing Pacific halibut to economically disadvantaged individuals under the prohibited species donation (PSD) program. This action is necessary to comply with provisions of the PSD Program implemented at 50 CFR part 679.

DATES: Effective August 13, 1998 through December 31, 2000.

ADDRESSES: Copies of the PSD Permit may be obtained from the Sustainable Fisheries Division, NMFS, Alaska Region, P.O. Box 21668, Juneau, AK 99802–21668, Attn: Lori Gravel. Copies of Amendments 50 and 50 and the Environmental Assessment/Regulatory Impact Review (EA/RIR) prepared for the amendments may be obtained from the North Pacific Fishery Management Council, Suite 306, 605 West 4th Ave., Anchorage, AK 99510–2252.

FOR FURTHER INFORMATION CONTACT: Alan Kinsolving, 907–586–7228.

SUPPLEMENTARY INFORMATION:

Background

NMFS manages the domestic groundfish fisheries in the exclusive economic zone of the Gulf of Alaska (GOA) and Bering Sea and Aleutian Islands (BSAI) according to the Fishery Management Plan (FMP) for the Groundfish Fishery of the Bering Sea and Aleutian Islands Area and the FMP for Groundfish of the Gulf of Alaska. The North Pacific Fishery Management Council prepared the FMPs under the authority of the Magnuson-Stevens Fishery Conservation and Management Act. Regulations governing the Alaska groundfish fisheries appear at 50 CFR parts 600 and 679. Fishing for Pacific halibut in waters in and off Alaska is governed by the Convention between the United States and Canada for the Preservation of the Halibut Fishery of the North Pacific Ocean and Bering Sea and by regulations adopted by the International Pacific Halibut Commission and approved by the Secretary of State of the United States pursuant to section 4 of the Northern Pacific Halibut Act (16 U.S.C. 773–773k).

NMFS approved Amendments 50/50 to the FMPs, authorizing the PSD program, on May 6, 1998, and published a final rule implementing the amendments in the **Federal Register** on June 12, 1998 (63 FR 32144). A full description of, and background information on, the PSD program may be found in the preamble to the proposed rule published in the **Federal Register** on March 4, 1998 (63 FR 10583) and in the EA/RIR prepared for that action.

The regulations implementing Amendments 50/50 expand the existing Salmon Donation Program by creating a PSD program that includes Pacific halibut as well as salmon. The regulations authorize the voluntary distribution of Pacific halibut, taken incidentally in groundfish trawl fisheries off Alaska and landed at shoreside processing plants, to economically disadvantaged individuals by tax-exempt organizations through an authorized distributor. The Regional Administrator, Alaska Region, NMFS (Regional Administrator) may select one or more tax-exempt organizations to be authorized distributors, as defined by 50 CFR 679.2, based on the information submitted by applicants under § 679.26. After review of qualified applicants, NMFS must announce the selection of the authorized distributor(s) in the **Federal Register**, and issue the selected distributor(s) PSD permits. The regulations implementing the donation of halibut under the PSD program are applicable only through December 31, 2000. Thus, any PSD permits issued for halibut will expire on that date.

On July 16, 1998, the Regional Administrator received an application to be an authorized distributor of Pacific halibut from NFS, 600 Erickson Avenue, Suite 395, Bainbridge Island, WA, 98110. The Regional Administrator

reviewed the application and determined that it provided the required information and that NFS met the requirements for an authorized distributor. As required by § 679.26(b)(2), the Regional Administrator based his selection on the following criteria:

1. *The number and qualifications of applicants for PSD permits.* As of the date of this notice, only the application from NFS has been received. NFS has been coordinating the distribution of prohibited salmon bycatch since 1993 under experimental fishing permits and the Salmon Donation Program. NFS employs an independent seafood laboratory to ensure product quality and has received support from cold storage facilities and common carriers servicing the areas where Pacific halibut donation would take place.

2. *The number of harvesters and the quantity of halibut that applicants can effectively administer.* The donation of halibut is limited to halibut taken by trawl catcher vessels and landed at shoreside processing facilities. NFS has obtained statements of support from three shoreside processors located in Dutch Harbor, Alaska. According to its application, NFS has the capacity to receive and distribute halibut from as many as 40 processors and their associated catcher vessels.

3. *The anticipated level of halibut bycatch.* Total halibut bycatch mortality in the Alaska groundfish fisheries was estimated to be 6,757 metric tons (mt) during 1996. Much of this bycatch is discarded at-sea. NMFS estimates that no more than 25 mt of Pacific halibut will be landed at participating shoreside processing plants.

4. *The potential number of vessels and processors participating in the groundfish trawl fisheries.* During 1996, 56 shoreside processors and 213 trawl catcher vessels participated the groundfish trawl fisheries.

This PSD permit is in effect through December 31, 2000 unless suspended or revoked. It may not be transferred.

This permit may be suspended, modified, or revoked under 15 CFR part 904 for noncompliance with terms and conditions specified in the permit or for a violation of this section or other regulations in 50 CFR part 679.

Classification

This action is taken under 50 CFR 679.26.

Authority: 16 U.S.C. 773 *et seq.*, 1801 *et seq.*, and 3631 *et seq.*

Dated: August 6, 1998.

Bruce C. Morehead,

Acting Director, Office of Sustainable Fisheries, National Marine Fisheries Service.

[FR Doc. 98–21765 Filed 8–12–98; 8:45 am]

BILLING CODE 3510–22–F

DEPARTMENT OF COMMERCE

National Oceanic and Atmospheric Administration

[I.D. 080698E]

Endangered Species; Permits

AGENCY: National Marine Fisheries Service (NMFS), National Oceanic and Atmospheric Administration (NOAA), Commerce.

ACTION: Issuance of scientific research permits (1068, 1118, 1142, 1143, 1147) and modifications to scientific research permits (844, 964, 998, 1057, 1114, 1115)

SUMMARY: Notice is hereby given of the following actions regarding permits for takes of endangered and threatened species for the purposes of scientific research and/or enhancement: NMFS has issued permits subject to certain conditions set forth therein, to: the U.S. Fish and Wildlife Service (USFWS)(1068 and 1118), the Fish Ecology Division of the Northwest Fisheries Science Center, NMFS at Seattle, WA (NWFSC)(1142), Washington State Department of Natural Resources (WDNR)(1143), and the Columbia River Inter-Tribal Fish Commission at Portland, OR (CRITFC)(1147); and NMFS has issued modifications to scientific research permits to: the Idaho Department of Fish and Game at Boise, ID (IDFG)(844), NWFSC (964), the Shoshone-Bannock Tribes at Fort Hall, ID (SBT)(998), the U.S. Forest Service at Tiller, OR (USFS)(1057), the Washington Department of Fish and Wildlife (WDFW)(1114), and the Chelan County Public Utility District No. 1 (PUDCC)(1115).

DATES: Written comments or requests for a public hearing on any of the applications must be received on or before September 14, 1998.

ADDRESSES: The applications and related documents are available for review in the following offices, by appointment:

For permits 844, 964, 998, 1057, 1114, 1115, 1118, 1142, 1143, and 1147: Protected Resources Division (PRD), F/NWO3, 525 NE Oregon Street, Suite 500, Portland, OR 97232–4169 (503–230–5400).

For permit 1068: Protected Species Division, NMFS, 777 Sonoma Avenue, Room 325, Santa Rosa, CA 95404-6528 (707-575-6066).

All documents may also be reviewed by appointment in the Office of Protected Resources, F/PR3, NMFS, 1315 East-West Highway, Silver Spring, MD 20910–3226 (301–713–1401).

FOR FURTHER INFORMATION CONTACT: For permit 844, 964, 998, and 1147: Robert Koch, Portland, OR (503–230–5424).

For permits 1057, 1114, 1115, 1118, 1142, and 1143: Tom Lichatowich, Portland, OR (503–230–5438).

For permit 1068: Thomas Hablett, Protected Resources Division, (707-575-6066).

SUPPLEMENTARY INFORMATION:

Authority

Issuance of these permits, modifications, and amendments, as required by the ESA, was based on a finding that such permits, modifications, and amendments: (1) Were applied for in good faith; (2) would not operate to the disadvantage of the listed species which are the subject of the permits; and (3) are consistent with the purposes and policies set forth in section 2 of the ESA. These permits, modifications, and amendments were also issued in accordance with and are subject to parts 217-222 of Title 50 CFR, the NMFS regulations governing listed species permits.

Species Covered in this Notice

The following species are covered in this notice: Chinook salmon (*Oncorhynchus tshawytscha*), Coho salmon (*O. kisutch*), Cutthroat trout (*O. clarki clarki*), Sockeye salmon (*O. nerka*), and Steelhead trout (*O. mykiss*).

Permits and Modifications Issued

Notice was published on June 24, 1998 (63 FR 34366), that an application had been filed by IDFG for modification 6 to incidental take permit 844. Modification 6 to permit 844 was issued to IDFG on July 31, 1998. Permit 844 authorizes IDFG an annual incidental take of adult and juvenile, threatened, naturally produced, Snake River spring/summer chinook salmon and adult, threatened, Snake River fall chinook salmon associated with the State of Idaho's sport-fishing programs. For modification 6, IDFG is authorized an increase in the incidental take of adult, threatened, Snake River spring/summer chinook salmon associated with a salmon sport fishery on the upper South Fork of the Salmon River. The fishery will target non-listed adult, adipose fin-clipped, artificially propagated, summer chinook salmon. The fishery will be terminated when quotas are achieved,

the authorized mortality level of ESA-listed adult fish is reached, or August 4, 1998, whichever occurs first. Modification 6 is valid in 1998 only. Permit 844 expires on December 31, 1998.

Notice was published on May 29, 1998 (63 FR 29382), that an application had been filed by NWFSC for modification 1 to scientific research permit 964. Modification 1 to permit 964 was issued to NWFSC on July 20, 1998. Permit 964 authorizes NWFSC takes of juvenile, endangered, Snake River sockeye salmon; juvenile, threatened, Snake River fall chinook salmon; and juvenile, threatened, naturally produced and artificially propagated, Snake River spring/summer chinook salmon associated with a juvenile fall chinook salmon transportation study. The purpose of the study is to compare the adult recoveries of run-of-the-river subyearling chinook salmon transported around the hydropower dams on the Columbia River using state-of-the-art facilities and technologies versus those migrating inriver under as favorable passage conditions as possible. For modification 1, NWFSC is authorized takes of juvenile, endangered, naturally produced and artificially propagated, upper Columbia River (UCR) steelhead associated with the research. Also for modification 1, juvenile, ESA-listed, Snake River fall chinook salmon that will be taken under permit 964 are authorized to be transported to The Dalles Dam on the Columbia River and used for the survival study under NWFSC's permit 900. Modification 1 is valid for the duration of the permit. Permit 964 expires on December 31, 1998.

Notice was published on February 19, 1998 (63 FR 8435), that an application had been filed by SBT for modification 1 to scientific research permit 998. Modification 1 to permit 998 was issued to SBT on July 8, 1998. Permit 998 authorizes SBT annual takes of juvenile, endangered, Snake River sockeye salmon associated with a study designed to evaluate the destiny of the ESA-listed juvenile sockeye salmon that were released into Pettit Lake in Idaho from the Idaho Department of Fish and Game's captive broodstock program. An evaluation of the productivity of the fish in Pettit Lake is necessary to make management decisions on future releases of the progeny from the captive broodstock program. For modification 1, SBT is authorized an increase in the annual takes of ESA-listed juvenile sockeye salmon associated with a similar study at Alturas Lake in Idaho. Also for modification 1, SBT is authorized an annual take of juvenile, threatened, naturally produced, Snake River spring/summer chinook salmon associated with the Alturas Lake research. Modification 1 is valid for the duration of the permit. Permit 998 expires on December 31, 2000.

Notice was published on June 10, 1998 (63 FR 31739), that an application had been filed by USFS for Modification 1 to Permit 1057. Modification 1 was issued on August 4, 1998, and authorizes USFS to take Umpqua River cutthroat trout in a larger area of the South Umpqua River Basin. The information gathered will be used to establish fish distribution maps to clarify impacts of projected timber harvest in the South Umpqua River. Modification 1 is valid for the duration of the permit. Permit 1057 expires on December 31, 1998.

Notice was published on December 17, 1997 (62 FR 66053), that an application had been filed by USFWS for a scientific research permit. Permit 1068 was issued to USFWS on June 15, 1998. Permit 1068 authorizes takes of adult and juvenile, threatened, southern Oregon/northern California coast (SONCC) coho salmon associated with fish population and habitat studies within the California portion of the ESU. ESA-listed fish will be captured, handled, and released. Indirect mortalities associated with the research are also authorized. Permit 1068 expires on June 30, 2003.

Notice was published on May 15, 1998 (63 FR 27055), that an application had been filed by WDFW, for a modification to permit 1114. Modification 1 to permit 1114 was issued on July 29, 1998. Permit 1114 authorizes a take of juvenile, endangered, naturally produced and artificially propagated, UCR steelhead associated with a smolt monitoring program at Rock Island Dam on the Columbia River. Modification 1, authorizes WDFW to take adult, endangered, UCR steelhead, and is valid for the duration of the permit. Permit 1114 expires on December 31, 2002.

Notice was published on May 15, 1998 (63 FR 27055), that an application had been filed by PUDCC, for a modification to permit 1115. Modification 1 to permit 1115 was issued on July 29, 1998. Permit 1115 authorizes a take of juvenile, endangered, naturally produced and artificially propagated, UCR steelhead associated with two research studies. Modification 1 authorizes PUDCC to take adult, endangered, UCR steelhead. ESA-listed adults will be collected in a permanent bypass pipe at Rocky Reach Dam, handled to determine hatchery or wild origin, and released. The information will be used to design operational measures to enhance adult passage survival at the dam. Modification 1 is valid for the duration of the permit. Permit 1115 expires on December 31, 2002.

Notice was published on March 2, 1998 (63 FR 10198), that an application had been filed by USFWS for a 5-year research/enhancement permit. Permit 1118 was issued on July 30, 1998, and authorizes takes of endangered, artificially propagated, UCR steelhead associated with USFWS's role in an UCR steelhead supplementation program. The receipt, rearing, and release of ESA-listed fish at USFWS's Winthrop Hatchery will spread the risk of a catastrophic accident at one facility which could have serious consequences to one brood year. Permit 1118 expires on May 31, 2003.

Notice was published on May 29, 1998 (63 FR 29382), that an application had been filed by NWFSC for a scientific research permit. Permit 1142 was issued to NWFSC on July 20, 1998. Permit 1142 authorizes NWFSC takes of juvenile, endangered, Snake River sockeye salmon; juvenile, threatened, naturally produced and artificially propagated, Snake River spring/summer chinook salmon; juvenile, threatened, Snake River fall chinook salmon; and adult and juvenile, endangered, naturally produced and artificially propagated, UCR steelhead associated with a study designed to evaluate the effects of the new juvenile bypass/sampling facility at John Day Dam (located on the lower Columbia River) on migrating salmonids. The information will be used to identify and correct any problem areas associated with the bypass system with the ultimate goal of increasing juvenile salmonid survival at the dam. Permit 1142 expires on December 31, 1998.

Notice was published on April 16, 1998 (63 FR 18891), that an application had been filed by WDNR for a 1-year research permit. Permit 1143 was issued on June 26, 1998, and authorizes direct takes of juvenile, endangered, naturally produced, UCR steelhead associated with salmonid presence/absence surveys in proposed timber sale areas. Permit 1143 expires on December 31, 1999.

Notice was published on April 23, 1998 (63 FR 20169), that an application had been filed by CRITFC for a scientific research/enhancement permit. Permit 1147 was issued to CRITFC on July 14, 1998. Permit 1147 authorizes CRITFC an annual direct take of adult and juvenile, threatened, Snake River spring/summer chinook salmon associated with a

supplementation program at Johnson Creek of the South Fork Salmon River in Idaho. The objectives of CRITFC's program are to: (1) Establish an annual supply of chinook salmon broodstock capable of meeting annual supplementation objectives, (2) restore and maintain natural spawning populations of chinook salmon in Johnson Creek, (3) manage the program to increase survival and supplement natural production of chinook salmon in Johnson Creek, (4) increase nutrient enrichment into Johnson Creek, and (5) reestablish sport and tribal fisheries for chinook salmon. Permit 1147 does not authorize releases of juvenile fish from the Johnson Creek supplementation program. When monitoring/evaluation and long-term broodstock management plans are received and approved by NMFS and an Environmental Assessment is completed, NMFS will make a decision on amending permit 1147 to authorize juvenile fish releases from the program. Permit 1147 expires on December 31, 2002.

Dated: August 7, 1998.

Patricia A. Montanio,

Deputy Director, Office of Protected Resources, National Marine Fisheries Service.

[FR Doc. 98–21764 Filed 8–12–98; 8:45 am]

BILLING CODE 3510–22–F

DEPARTMENT OF DEFENSE

Department of the Army

Final Environmental Assessment and Finding of No Significant Impact for Disposal and Reuse of the Bellmore Logistics Activity, Long Island, New York, BRAC 95

AGENCY: Department of the Army, DoD.

ACTION: Notice of availability.

SUMMARY: In accordance with Public Law 101–510 (as amended), the Defense Base Closure and Realignment Act of 1990, the Defense Base Closure and Realignment Act of 1990, the Defense Base Closure and Realignment Commission recommended the closure of Bellmore Logistics Activity.

The Final Environmental Assessment (EA) evaluated the environmental impacts of the disposal and subsequent reuse of the 16.79 acres. Alternatives examined in the EA include encumbered disposal of the property, unencumbered disposal of the property, and no action. Encumbered disposal refers to transfer or conveyance of property having restrictions on subsequent use as a result of any Army-imposed or legal restraint. Under the no action alternative, the Army would not dispose of property but would maintain it in caretaker status for an indefinite period.

DATES: Interested parties are invited to review and comment on the Finding of No Significant Impact (FNSI) on or before September 14, 1998.

ADDRESSES: A copy of the Final EA and FNSI may be obtained by writing to Mr. Carl Burgamy, Jr., U.S. Army Engineer District, Mobile, ATTN: CESAM–PD–ER, 109 St. Joseph Street, Mobile, Alabama 36602.

FOR FURTHER INFORMATION CONTACT: Mr. Carl Burgamy, Jr. by facsimile at (334) 690–2727.

SUPPLEMENTARY INFORMATION: While disposal of Bellmore Logistics Activity is the Army's primary action, the EA also analyzes the potential environmental effects of reuse as a secondary action by means of evaluating intensity-based rescue scenarios. The Army's preferred alternative for disposal of Bellmore Logistics Activity property is encumbered disposal, with encumbrances pertaining to the possible presence of lead-based paint and asbestos-containing material, and the requirement for a right of reentry for environmental clean-up.

Therefore, based on the analysis found in the EA, which was incorporated into the FNSI, it has been determined that implementation of the proposed action will not have significant individual or cumulative impacts on the quality of the natural or the human environment. Because no significant environmental impacts will result from implementation of the proposed action, an Environmental Impact Statement is not required and will not be prepared. The Army will not initiate the proposed action for 30 days following publication of this Notice of Availability in the **Federal Register**.

The Final EA and FNSI are available for review at the North Bellmore Public Library, 1551 Newbridge Road, North Bellmore, NY 11710.

Dated: August 10, 1998.

Raymond J. Fatz,

Deputy Assistant Secretary of the Army (Environment, Safety and Occupational Health) OASA (I,L&E).

[FR Doc. 98–21797 Filed 8–12–98; 8:45 am]

BILLING CODE 3710–08–M

DEPARTMENT OF DEFENSE

Department of the Army

Notice of Record of Decision on the Final Environmental Impact Statement (FEIS) on the Disposal and Reuse of the U.S. Army Garrison, Fort Ritchie, Washington County, Maryland

AGENCY: Department of the Army, DoD.

ACTION: Record of Decision.

SUMMARY: The Department of the Army announces its Record of Decision (ROD) on the FEIS for the disposal and reuse of 638 acres comprising the U.S. Army Garrison, Fort Ritchie, Maryland, in accordance with the Defense Base Closure and Realignment Act of 1990, Public Law 101–510, as amended. Approximately 19.3 acres of property and facilities will be retained by the Army for use as a National Guard enclave.

ADDRESSES: A copy of the ROD may be obtained from the U.S. Army Corps of Engineers, ATTN: Mr. Clifford Kidd (CENAB–PL–EM), Baltimore District, P.O. Box 1715, Baltimore, Maryland 21203–1715.

FOR FURTHER INFORMATION CONTACT: Mr. Clifford Kidd at (410) 962–3100 or facsimile at (410) 962–4698.

SUPPLEMENTARY INFORMATION: The FEIS analyzed two disposal alternatives: (1) the No Action Alternative, which entails maintaining the property in caretaker status after closure; and (2) the Encumbered Disposal Alternative, which entails transferring the property to future owners with Army-imposed limitations, or encumbrances, on the future use of the property. In the ROD, the Army concludes that the FEIS adequately addresses the impacts of property disposal and documents its decision to transfer the property as encumbered. The Army's preferred alternative is disposal with encumbered title on all property transfers. Additionally, the FEIS analyses the potential environmental and socioeconomic consequences of three reuse alternatives: (1) Low Intensity Reuse Alternative; (2) Low-Medium Intensity Reuse Alternative; and (3) Medium Intensity Reuse Alternative. Disposal alternatives were developed by the Army. Reuse alternatives were developed by the Fort Ritchie Local Redevelopment Authority. The resource areas evaluated for potential impacts by the proposed action (disposal) and the secondary action (reuse) include: Land Use; Climate; Air Quality; Noise; Geology, Soils, and Topography; Water Resources; Infrastructure; Hazardous and Toxic Substances; Biological

Resources and Ecosystems; Cultural Resources; Legacy Resources; Sociological Environment; Economic Development; Quality of Life; Installation Agreements, and Permits and Regulatory Authorizations.

The ROD allows the Army to initiate action to dispose of the excess property of the U.S. Army Garrison, Fort Ritchie, Maryland, in accordance with the Fort Ritchie Redevelopment Plan.

Copies of the FEIS are available from the above listed address.

Dated: August 10, 1998.

Raymond J. Fatz,

Deputy Assistant Secretary of the Army (Environment, Safety and Occupational Health) OASA (I, L&E).

[FR Doc. 98–21798 Filed 8–12–98; 8:45 am]

BILLING CODE 3710–08–M

DEPARTMENT OF DEFENSE

Department of the Army

Advisory Committee Meeting Notice

AGENCY: U.S. Army Training and Doctrine Command (TRADOC).

ACTION: Notice of meeting.

SUMMARY: In accordance with Section 10(a)(2) of the Federal Advisory Committee Act, Pubic Law (92–463), announcement is made of the following meeting:

Name of Committee: Distance Learning/training Technology Subcommittee of the Army Education Advisory Committee meeting:

Date: 27 August 1998.

Place: Fort Eustis, Virginia.

Time: 1000–1130 on 27 August 1998.

Type of Meeting: Video teleconference (VTC).

Proposed Agenda: Review and discussion of Army CD–ROM Courseware.

Purpose of the Meeting: The members will make comments regarding Army distance Learning Courseware they have evaluated, and advise the Assistant Deputy Chief of Staff (ADCST), HQ training and doctrine Command (TRADOC), on ways to improve training effectiveness.

FOR FURTHER INFORMATION CONTACT: All communications regarding this subcommittee should be addressed to Mr. Richard Karpinski, at Commander, Headquarters TRADOC, ATTN: ATTG–CF (Mr. Karpinski), Fort Monroe, VA 23651–5000; telephone number (757) 728–5531.

SUPPLEMENTARY INFORMATION: Meeting of the advisory committee is open to the public. Because of restricted meeting space, attendance with be limited to those persons who have notified the Advisory Committee Management Office in writing at last five days prior to the meeting of their intention to attend. Contact Mr. Karpinski (757–728–5531) for meeting agenda and specific locations.

Any member of the public may file a written statement with the committee before, during, or after the meeting. To the extent that time permits, the committee chairman may allow public presentations or oral statements at the meeting.

Gregory D. Showalter,

Army Federal Register Liaison Officer.

[FR Doc. 98–21734 Filed 8–12–98; 8:45 am]

BILLING CODE 3710–08–M

DEPARTMENT OF DEFENSE

Department of the Army

Armed Forces Institute of Pathology Scientific Advisory Board; Meeting

AGENCY: Department of the Army, DoD.

ACTION: Notice of Open Meeting.

SUMMARY: In accordance with 10(a)(2) of the Federal Advisory Committee Act, Public Law (92–463) announcement is made of the following open meeting:

Name of Committee: Scientific Advisory Board (SAB).

Dates of Meeting: 12–13 November 1998.

Place: Armed Forces Institute of Pathology, Building 54, 14th St. & Alaska Ave., NW, Washington, DC 20306–6000.

Time: 8:00 a.m.–4:30 p.m. (12 November 1998). 8:00 a.m.–12:00 p.m. (13 November 1998).

FOR FURTHER INFORMATION CONTACT: Mr. Ridgely Rabold, Center for Advanced Pathology (CAP), AFIP, Building 54, Washington, DC 20306–6000, phone (202) 782–2553.

SUPPLEMENTARY INFORMATION: *General function of the Board:* The Scientific Advisory Board provides scientific and professional advice and guidance on programs, policies and procedures of the AFIP.

Agenda: The Board will hear status reports from the AFIP Deputy Director, Center for Advanced Pathology Director, the National Museum of Health and Medicine, and each of the pathology departments which the Board members will visit during the meeting.

Open board discussions: Reports will be given on all visited departments. The reports will consist of findings, recommended areas of further research, and suggested solutions. New trends and/or technologies will be discussed and goals established. The meeting is open to the public.

Gregory D. Showalter,

Army Federal Register Liaison Officer.

[FR Doc. 98–21733 Filed 8–12–98; 8:45 am]

BILLING CODE 3710–08–M

DEPARTMENT OF DEFENSE

Department of the Navy

Notice of Availability of Invention for Licensing; Government-Owned Invention

AGENCY: Department of the Navy, DOD.

ACTION: Notice.

SUMMARY: The following inventions are assigned to the United States Government as represented by the Secretary of the Navy and are available for licensing by the Department of the Navy: U.S. Patent No. 5,777,400 entitled ''Shielded Computer Network Switch'' issued July 7, 1998; U.S. Patent Applications No. 08/919,181 entitled ''Physical Security Access Control System to Local Area Network (LAN) and Wide Area Network (WAN)'' filed August 15, 1997; U.S. Patent Application No. 08/919,180 entitled ''Secured Network System'' (title will be changed to ''Data Relay Switch'') filed August 15, 1997; and U.S. Patent Application No. 09/035,409 entitled ''Secured Network System'' filed February 10, 1998.

ADDRESSES: Requests for copies of the patent and patent applications cited should be directed to the Office of Naval Research, ONR 00CC, Ballston Tower One, 800 North Quincy Street, Arlington, Virginia 22217–5660, and must include the Navy Case number.

FOR FURTHER INFORMATION CONTACT: Mr. R.J. Erickson, Staff Patent Attorney, Office of Naval Research, ONR 00CC, Ballston Tower One, 800 North Quincy Street, Arlington, Virginia 22217–5660, telephone (703) 696–4001.

(Authority: 35 U.S.C. 207, 37 CFR Part 404).

Dated: August 10, 1998.

Michael I. Quinn,

Commander, Judge Advocate General's Corps, U.S. Navy, Federal Register Liaison Officer.

[FR Doc. 98–21727 Filed 8–12–98; 8:45 am]

BILLING CODE 3810–FF–P

DEPARTMENT OF DEFENSE

Department of the Navy

Notice of Intent to Grant Exclusive Patent License; Market Central, Inc.

AGENCY: Department of the Navy, DOD.

ACTION: Notice.

SUMMARY: The Department of the Navy hereby gives notice of its intent to grant to Market Central, Inc., a revocable, nonassignable, exclusive license in the United States and certain foreign countries, to practice the Government owned inventions described in U. S. Patent No. 5,777,400 entitled ''Shielded Computer Network Switch'' issued July 7, 1998; U.S. Patent Applications Nos. 08/919,181 entitled ''Physical Security Access Control System to Local Area Network (LAN) and Wide Area Network (WAN)'' filed August 15, 1997; U.S. Patent Application No. 08/919,180 entitled ''Secured Network System'' (title will be changed to ''Data Relay Switch'') filed August 15, 1997; and U.S. Patent Application No. 09/035,409 entitled ''Secured Network System'' filed February 10, 1998.

DATES: Anyone wishing to object to the grant of this license must file written objections along with supporting evidence, if any, not later than October 13, 1998.

ADDRESSES: Written objections are to be filed with the Office of Naval Research, ONR 00CC, Ballston Tower One, 800 North Quincy Street, Arlington, Virginia 22217–5660.

FOR FURTHER INFORMATION CONTACT: Mr. R. J. Erickson, Staff Patent Attorney, Office of Naval Research, ONR 00CC, Ballston Tower One, 800 North Quincy Street, Arlington, Virginia 22217–5660, telephone (703) 696–4001.

(Authority: 35 U.S.C. 207, 37 CFR Part 404).

Dated: August 10, 1998.

Michael I. Quinn,

Commander, Judge Advocate General's Corps, U.S. Navy, Federal Register Liaison Officer.

[FR Doc. 98–21726 Filed 8–12–98; 8:45 am]

BILLING CODE 3810–FF–P

DEPARTMENT OF EDUCATION

Submission for OMB Review; Comment Request

AGENCY: Department of Education.

ACTION: Submission for OMB review; comment request.

SUMMARY: The Acting Deputy Chief Information Officer, Office of the Chief Information Officer, invites comments on the submission for OMB review as required by the Paperwork Reduction Act of 1995.

DATES: Interested persons are invited to submit comments on or before September 14, 1998.

ADDRESSES: Written comments should be addressed to the Office of Information and Regulatory Affairs, Attention: Danny Werfel, Desk Officer, Department of Education, Office of Management and Budget, 725 17th Street, NW., Room 10235, New Executive Office Building, Washington, DC 20503. Requests for copies of the proposed information collection requests should be addressed to Patrick J. Sherrill, Department of Education, 600 Independence Avenue, SW, Room 5624, Regional Office Building 3, Washington, DC 20202–4651.

FOR FURTHER INFORMATION CONTACT: Patrick J. Sherrill (202) 708–8196. Individuals who use a telecommunications device for the deaf (TDD) may call the Federal Information Relay Service (FIRS) at 1–800–877–8339 between 8 a.m. and 8 p.m., Eastern time, Monday through Friday.

SUPPLEMENTARY INFORMATION: Section 3506 of the Paperwork Reduction Act of 1995 (44 U.S.C. Chapter 35) requires that the Office of Management and Budget (OMB) provide interested Federal agencies and the public an early opportunity to comment on information collection requests. OMB may amend or waive the requirement for public consultation to the extent that public participation in the approval process would defeat the purpose of the information collection, violate State or Federal law, or substantially interfere with any agency's ability to perform its statutory obligations. The Acting Deputy Chief Information Officer, Office of the Chief Information Officer, publishes this notice containing proposed information collection requests prior to submission of these requests to OMB. Each proposed information collection, grouped by office, contains the following: (1) Type of review requested, e.g., new, revision, extension, existing or reinstatement; (2) Title; (3) Summary of the collection; (4) Description of the need for, and proposed use of, the information; (5) Respondents and frequency of collection; and (6) Reporting and/or Recordkeeping burden. OMB invites public comment at the address specified above. Copies of the requests are available from Patrick J. Sherrill at the address specified above.

Dated: August 7, 1998.

Hazel Fiers,

Acting Deputy Chief Information Officer, Office of the Chief Information Officer.

Office of Vocational and Adult Education

Type of Review: New.

Title: Secretary's Awards for Outstanding Adult Education and Literacy Programs.

Frequency: Every other year.

Affected Public: State, local or Tribal Gov't; SEAs or LEAs.

Reporting and Recordkeeping Hour Burden:

Responses: 40.

Burden Hours: 1,600.

Abstract: The Secretary's Awards identifies programs featuring promising practices in family literacy, welfare to further education or work, services to out-of-school youth, or corrections.

[FR Doc. 98–21663 Filed 8–12–98; 8:45 am]

BILLING CODE 4000–01–P

DEPARTMENT OF EDUCATION

National Committee on Foreign Medical Education and Accreditation; Notice of Meeting

Date and Time: Thursday, October 8, 1998, 8:30 a.m. until 5:30 p.m.; Friday, October 9, 1998, 8:30 a.m. until 12:30 p.m.

Place: The Embassy Suites Hotel, 1250 22nd Street, N.W., Washington, D.C. 20037, (202) 857–3388. The meeting site is accessible to individuals with disabilities. An individual with a disability who will need an accommodation to participate in the meeting (e.g., interpreting service, assistive listening device, or materials in an alternate format) should notify the contact person listed in this notice at least two weeks before the scheduled meeting date. Although the Department will attempt to meet a request received after that date, the requested accommodations may not be available because of insufficient time to arrange them.

Status: Parts of this meeting will be open to the public. Parts of this meeting will be closed to the public.

Matters to be Considered: The standards of accreditation applied to medical schools by a number of foreign countries and the comparability of those standards to the standards of accreditation applied to United States medical schools. Discussions of the standards of accreditation will be held in sessions open to the public. Discussions that focus on specific determinations of comparability are closed to the public in order that each country may be properly notified of the decision.

Supplementary Information: Pursuant to section 481 of the Higher Education Act of 1965, as amended in 1992 (20 U.S.C. § 1088), the Secretary established within the Department of Education the National Committee on Foreign Medical Education and Accreditation. The Committee's

responsibilities are to (1) evaluate the standards of accreditation applied to applicant foreign medical schools; and (2) determine the comparability of those standards to standards for accreditation applied to United States medical schools.

For Further Information Contact: Bonnie LeBold, Executive Director, National Committee on Foreign Medical Education and Accreditation, 7th and D Streets, S.W., Room 3082, ROB #3, Washington, D.C. 20202–7563. Telephone: (202) 260–3636. Beginning September 28, 1998, you may call to obtain the identity of the countries whose standards are to be evaluated during this meeting.

Dated: August 6, 1998.

David A. Longanecker,

Assistant Secretary for Postsecondary Education.

[FR Doc. 98–21757 Filed 8–12–98; 8:45 am]

BILLING CODE 4000–01–M

DEPARTMENT OF ENERGY

Storage and Disposition of Weapons-Usable Fissile Materials

AGENCY: Department of Energy.

ACTION: Notice of an amended Record of Decision.

SUMMARY: The U.S. Department of Energy (DOE) prepared a final programmatic environmental impact statement, Storage and Disposition of Weapons-Usable Fissile Materials (Storage and Disposition PEIS) (DOE/EIS–0229, December 1996) in accordance with the National Environmental Policy Act (NEPA), Council on Environmental Quality NEPA implementing regulations, and DOE implementing procedures. The Storage and Disposition PEIS, among other things, assesses the potential environmental impacts of alternatives and locations for storing weapons-usable fissile materials (plutonium and highly enriched uranium).

On January 14, 1997, DOE issued a Record of Decision (Storage and Disposition ROD), 62 FR 3014, (January 21, 1997), selecting weapons-usable fissile materials storage and surplus plutonium disposition strategies. For plutonium storage, DOE decided to consolidate part of its weapons-usable plutonium storage by upgrading and expanding existing and planned facilities at the Pantex Plant (Pantex) near Amarillo, Texas and the Savannah River Site (SRS) near Aiken, South Carolina. For plutonium currently stored at the Hanford Site (Hanford) near Richland, Washington, and other DOE sites, DOE decided that surplus weapons-usable plutonium would remain at these sites until disposition (or move to lag storage at a disposition facility). The weapons-usable plutonium stored at the Rocky Flats Environmental Technology Site (RFETS), near Golden, Colorado, would be moved to Pantex and the SRS. However, the plutonium destined for the SRS, i.e., non-pit, weapons-usable surplus plutonium, would be moved only if: (1) the plutonium had been stabilized under corrective actions in response to the Defense Nuclear Facilities Safety Board (DNFSB) Recommendation 94–1 and packaged to meet the DOE storage Standard 3013–96, Criteria for Safe Storage of Plutonium Metals and Oxides, (2) the construction and expansion of the Actinide Packaging and Storage Facility (APSF) at the SRS had been completed, and (3) the SRS had been selected in the upcoming Record of Decision for the Surplus Plutonium Disposition Environmental Impact Statement as the immobilization disposition site for surplus weapons-usable plutonium.

In order to support the early closure of the RFETS and the early deactivation of plutonium storage facilities at the Hanford site, DOE is modifying, contingent upon the satisfaction of certain conditions, some of the decisions made in its Storage and Disposition ROD associated with surplus plutonium storage pending disposition. Namely, DOE will take steps that allow: (1) the accelerated shipment of all non-pit surplus weapons-usable plutonium from the RFETS (about 7 metric tons) to the SRS beginning in about 2000, in advance of completion of the APSF in 2001, and (2) the relocation of all Hanford surplus weapons-usable plutonium (about 4.6 metric tons) to the SRS, between about 2002 and 2005, pending disposition. However, consistent with the Storage and Disposition PEIS ROD, DOE will only implement the movement of RFETS and Hanford non-pit, surplus weapons-usable plutonium inventories to the SRS if the SRS is selected as the immobilization disposition site. DOE is preparing the Surplus Plutonium Disposition Environmental Impact Statement (SPD EIS), draft issued July 1998, as part of the decision making process for determining an immobilization site.[1]

To accommodate the storage of Hanford surplus weapons-usable plutonium, DOE will expand the APSF as planned in the Storage and Disposition ROD. In addition, to accommodate the early receipt and storage of the RFETS surplus plutonium, the Department will prepare additional suitable storage space in Building 105–K (i.e., K–Reactor) in the K–Area at the SRS. Portions of Building 105–K will be modified to provide safe and secure plutonium storage. Safeguards and security features will be upgraded, criticality monitoring devices will be installed, structural features will be inspected and repaired, roof vents will be added, and doors will be modified. Several areas in the facility will be decontaminated and excess equipment will be removed to provide additional floor space.

Modifications will also include dismantling and removing unused process equipment in four building areas: Stack Area, Crane Maintenance Area, Crane Wash Area, and Process Room.

Security systems in the four building areas will be reactivated and upgraded to support using them for plutonium storage. Existing systems including the K-Area security perimeter, security control system and building water/power ventilation support systems will be used. Building modifications will provide for truck loading and unloading, material conformation, shipping accountability measurements, and storage. The Department will also declassify (process the metal to produce unclassified ''buttons'') some of the RFETS plutonium materials using SRS's FB-Line (in the F-Area) and after declassification, package this material in the APSF to meet the DOE storage Standard 3013–96, Criteria for Safe Storage of Plutonium Metals and Oxides.

All plutonium materials shipped to SRS will be stable and, except for classified metal and/or parts, will be packaged to meet the requirements of the DOE Standard 3013–96, Criteria for Safe Storage of Plutonium Metals and Oxides, before shipment. All shipments of plutonium to SRS will be by Safe Secure Transport (SST) in accordance with applicable DOE, U.S. Department of Transportation and U.S. Nuclear Regulatory Commission requirements and regulations. Some of the RFETS plutonium material packaged and shipped will be less than 50% plutonium by weight; as a result, there will be approximately 3% more total weight of material and a corresponding increase in the number of shipments than considered in the Storage and Disposition PEIS, although the total amount of plutonium in the material will remain about the same.

Under the previous ROD, a maximum of 10 metric tons of surplus plutonium, including plutonium from RFETS and existing onsite plutonium, would be

[1] SRS has been identified by DOE as the preferred site for the immobilization disposition facility.

stored at SRS in the APSF, pending disposition, provided that SRS is selected as the immobilization site following completion of the Surplus Plutonium Disposition EIS. Transfer of plutonium from RFETS to SRS would begin when the APSF is completed in 2001.

With this amended ROD, a total of approximately 11.6 metric tons of surplus weapons-usable plutonium from Hanford and RFETS (in addition to existing onsite SRS surplus plutonium, for a total of approximately 14 metric tons of surplus plutonium) could be stored at SRS in the APSF and Building 105–K, pending disposition, provided that SRS is selected as the immobilization site. Transfer of plutonium from RFETS to SRS would begin when the modifications to Building 105–K are completed, i.e., in about 2000; shipments of plutonium from Hanford to SRS would begin in about 2002.

This amended ROD only alters DOE's previous decision (Storage and Disposition ROD) for the storage of non-pit, surplus weapons-usable plutonium currently located at the RFETS and Hanford sites. No changes are being made to other storage decisions or any decisions associated with surplus fissile material disposition.

In accordance with 10 CFR 1021.314, DOE has prepared a Supplement Analysis to determine if these changes require a supplement to the Storage and Disposition PEIS under the Council on Environmental Quality Regulations at 40 CFR 1502.9(c). The Supplement Analysis shows that the new proposed action does not result in a substantial change to environmental concerns evaluated in the Storage and Disposition PEIS. Also, the Supplement Analysis shows that the proposed action does not present significant new circumstances or information relevant to the environmental concerns evaluated in the Storage and Disposition PEIS. Therefore, based on the Supplement Analysis, DOE has determined that a supplement to the Storage and Disposition PEIS is not required, and DOE has decided not to prepare such a supplement.

FOR FURTHER INFORMATION CONTACT: For further information on the long-term storage or the disposition of weapons-usable fissile materials, or to receive a copy of the final Storage and Disposition PEIS, the Storage and Disposition EIS ROD or the Supplement Analysis, contact: G. Bert Stevenson, NEPA Compliance Officer, Office of Fissile Materials Disposition (MD–4), U.S. Department of Energy, 1000 Independence Avenue, SW., 1Washington, DC 20585, (202) 586–5368.

For further information on the DOE NEPA process, contact: Carol M. Borgstrom, Director, Office of NEPA Policy and Assistance (EH–42), U.S. Department of Energy, 1000 Independence Avenue, SW., Washington, DC 20585, (202) 586–4600, or leave a message at (800) 472–2756.

SUPPLEMENTARY INFORMATION:

I. Background

A. Current Storage Program and Original Decision for Surplus Weapons-Usable Plutonium

DOE is currently phasing out the storage of all weapons-usable plutonium at RFETS. The phaseout involves shipping all RFETS pits to Pantex, and shipping all RFETS surplus non-pit, weapons-usable plutonium to the SRS (subject to certain conditions) starting in about 2001. As decided in the January 1997 Storage and Disposition PEIS ROD, the stabilized non-pit, surplus weapons-usable plutonium would not be moved unless and until: expansion of the APSF [2] at the SRS had been completed; the RFETS material had been stabilized and packaged to meet the Criteria for Safe Storage of Plutonium Metals and Oxides for long-term storage under corrective actions in response to the Defense Nuclear Facilities Safety Board Recommendation 94–1; and DOE had decided to immobilize plutonium at the SRS. The Department also decided to continue the current storage of surplus plutonium at Hanford, the Idaho National Engineering and Environmental Laboratory (INEEL), and Los Alamos National Laboratory (LANL) pending disposition (or movement to lag storage); and to pursue a strategy for plutonium disposition that would immobilize surplus weapons-usable plutonium in glass or ceramic forms and would allow the burning of some of the surplus weapons-usable plutonium (mostly from pits) as mixed oxide fuel in existing commercial light-water reactors.

B. Need to Change Storage Program

Recently, DOE has estimated that accelerating the closure of RFETS from 2010 to 2006 could save as much as $1.3 billion. Integral to achieving an accelerated closure of the site would be removal of the non-pit, surplus weapons-usable plutonium to SRS two years earlier than the current plan. Removal of the surplus plutonium at RFETS is only one of several steps to realize the savings. Other steps are proposed or ongoing pursuant to separate NEPA review. DOE also expects that the transfer of non-pit, surplus weapons-useable plutonium from Hanford to Savannah River could save as much as $150 million in upgrade and operating costs for plutonium storage facilities at the Hanford Site. As with the RFETS plutonium, the transfer would not be accomplished unless DOE decided to locate the plutonium immobilization facility at the Savannah River Site. The implementation cost for the proposed action is estimated to be approximately $93 million.

Closing RFETS by 2006 would, among other things, require the removal of non-pit, surplus weapons-usable plutonium metal and oxide from RFETS by 2002. In order to remove all the non-pit, surplus weapons-usable plutonium from RFETS by 2002, DOE would have to begin transferring the material to the SRS by January 2000, prior to completing the construction of the APSF.

DOE has also reevaluated plutonium storage operations at Hanford and determined that transferring all (about 4.6 metric tons) non-pit, surplus weapons-usable plutonium from that site for storage could save the Department as much as $150 million by avoiding upgrade and operating costs for plutonium storage facilities at the Hanford Site. DOE is considering the early transfer of plutonium from Hanford to the SRS as a means of achieving this savings.

These transfers would not occur unless DOE decides to immobilize plutonium at the SRS. A ROD to select the immobilization site is anticipated in early 1999 in the SPD EIS.

C. Proposed Action

The Department of Energy is proposing to accelerate the movement of all (about 7 metric tons) of non-pit, surplus weapons-usable plutonium at the RFETS and to move all (about 4.6 metric tons) of the surplus weapons-usable plutonium at Hanford to the SRS for storage pending disposition. The RFETS plutonium would be shipped to the SRS from about January 2000 through 2002. The Hanford plutonium would be shipped to the SRS from about 2002 through 2005.

The plutonium would not be moved to SRS unless the Department decides to disposition (immobilize) the non-pit,

[2] The APSF has been designed but not built. Construction is scheduled to start in October 1998 and the facility is scheduled to be in operation by October 2001. Expansion of the APSF refers to increasing the vault capacity of the facility to the current design of 5,000 storage positions (sufficient storage space for current SRS materials and RFETS materials).

surplus weapons-usable plutonium at SRS, after completion of the final Surplus Plutonium Disposition Environmental Impact Statement. In addition, the plutonium would not be shipped until it were stabilized and packaged to meet DOE Standard 3013–96, *Criteria for Safe Storage of Plutonium Metals and Oxides* in response to Defense Nuclear Facilities Safety Board Recommendation 94–1. This proposed action is consistent with DOE's objective, as explained in the ROD for the Storage and Disposition PEIS, to reduce over time the number of locations where plutonium is stored in the DOE complex.

Starting in about January 2000, all non-pit, surplus weapons-usable plutonium (except for classified plutonium) would be shipped to Building 105-K. At Building 105-K, the shipping containers [3] would be unloaded using a battery powered fork-lift truck. Material control and accountability measurements would be made at Building 105-K. The shipping containers would then be loaded onto metal pallets and transferred to a storage location in the building. DOE would not open any of the shipping containers in Building 105-K. While in storage, the containers would be inspected on a regular basis to assure external container integrity.[3] DOE has successfully used (and continues to use) shipping containers for plutonium storage at the SRS. No problems with a loss of material confinement have been experienced to date.

Portions of Building 105-K will be modified to facilitate plutonium storage. Safeguards and security features will be upgraded, criticality monitoring devices will be installed, structural features will be inspected and repaired, and roof vents will be added and doors will be modified. Several areas in the facility will be decontaminated and excess equipment will be removed to provide additional floor space.[4]

Modifications will include dismantling and removing unused process equipment in four building areas: Stack Area, Crane Maintenance Area, Crane Wash Area, and Process Room. These areas total approximately 30,000 square feet, are within the security areas that existed for reactor operations, and are adjacent to a currently active highly enriched uranium storage area. Security systems in the four building areas will be reactivated and upgraded to support using them for plutonium storage. Existing systems including the K-Area security perimeter, security control system and building water/power ventilation support systems will be used. Building modifications will provide for truck loading and unloading, material conformation, shipping accountability measurements, and storage.

Some of the RFETS plutonium is in a classified form, which would restrict the International Atomic Energy Agency (IAEA) from access to the material. DOE intends to make the APSF vault, and potentially Building 105-K, available for IAEA inspection. As a result, the RFETS plutonium needs to be declassified. To accomplish this objective, DOE would transfer the classified RFETS plutonium to F-Area for processing (declassifying) in the FB-Line facility at SRS. In the FB-Line facility, the plutonium would be melted using existing facilities and equipment that are part of the plutonium metal production process for which the FB-Line facility was designed. The declassification work would not be done on a continuous basis, but rather whenever processing capabilities were available. The RFETS plutonium would be fashioned into metal ''buttons'' that are the traditional FB-Line product. After the ''buttons'' are fabricated, the material would be transferred to the APSF and packaged to meet the requirements of DOE's plutonium storage standard. Then, the material would be placed in type B shipping containers and transported to Building 105-K for storage. Alternatively, the material could remain in the APSF vault, if space is available to allow for operational flexibility.

Some of the RFETS plutonium materials would be less than 50% plutonium by weight and would involve approximately 3% more total weight of material and a corresponding increase in the number of shipments than considered in the S&D PEIS.

Beginning in about 2002, SRS would begin to receive from Hanford stabilized plutonium packaged to meet DOE's long-term standard for placement in the APSF. Once APSF is operating, DOE could transfer a portion of the RFETS material from Building 105-K to the APSF in order to provide for operational flexibility. The plutonium from RFETS and Hanford would remain in storage at the APSF and Building 105-K pending disposition along with existing SRS surplus plutonium.

The plutonium would be transferred in type B shipping containers by truck using methods and routes described in the Storage and Disposition PEIS (i.e., the Department of Energy's Safe Secure Transport System).

If DOE decides to pursue the No Action alternative for the disposition of surplus plutonium in the SPD EIS Record of Decision, the SRS, RFETS, and Hanford materials would remain in storage at their current sites in accordance with the No Action alternative. If the DOE decides to immobilize surplus plutonium at Hanford, the SRS and RFETS materials would be shipped to Hanford in accordance with the decisions reached in the SPD EIS Record of Decision.

II. NEPA Process for Amending ROD

A. Supplement Analysis

Pursuant to DOE regulations in 10 CFR 1021.314, DOE has prepared a Supplement Analysis, Supplement Analysis for Storing Plutonium in the Actinide Packaging and Storage Facility and Building 105-K at the Savannah River Site (July 1998), to help determine whether a supplement to the Storage and Disposition PEIS is required under the Council on Environmental Quality Regulations, 40 CFR 1502.9(c). The Supplement Analysis compares the potential impacts of the new proposed action to the impacts discussed for the plutonium storage alternatives in the Storage and Disposition PEIS. The Supplement Analysis shows that the new proposed action does not make a substantial change to environmental concerns evaluated in the Storage and Disposition PEIS. Furthermore, the Supplement Analysis shows that there are no new significant circumstances or information relevant to environmental concerns and bearing on the proposed action or its impact.

B. Comparison of Potential Impacts

The facilities involved (i.e, Building 105-K and the APSF) are or will be located in existing industrial areas at the SRS.

- Land Resources, Site Infrastructure, Geology and Soils, Biology Resources and Cultural and Paleontological Resources. There are no aquatic habitats or wetlands in these areas nor are there any threatened or endangered species. None of the affected facilities have been nominated for inclusion in the National Register of Historic Places, and there are no plans for such nominations.

Based on evaluations in the Storage and Disposition PEIS and information

[3] To support the proposed action, DOE would purchase additional Type 9975 shipping containers, which are Type B containers and would also be used for storage. This would be done so that storing the RFETS materials in shipping containers pending disposition will not impact the Department's supply of Type B shipping containers.

[4] A portion of these activities could be completed as part of maintenance, clean-up, and decontamination activities at SRS that DOE has determined are categorically excluded from further NEPA review.

incorporated in the Supplement Analysis from the Final Environmental Impact Statements on the Interim Management of Nuclear Materials (DOE/EIS–0220, October, 1995)(IMNMS EIS) there would be little or no impact to land resources, site infrastructure, geology and soils, biology resources and cultural and Paleontological resources by the construction, operation and expansion of the APSF. This is equally true for Building 105-K since all storage operations would occur within the existing Building 105-K structure.

• It is expected that declassification of the RFETS material would require 100 Mw hrs/yr of electricity. This work would not require modification to the FB-line's electrical system and is well within the capacity of the facility and the site.

• Packaging and Transportation. The transportation routes to the SRS would be the same as those assumed in the Storage and Disposition PEIS (i.e., overland truck routes on interstate highways and state roads). Transportation operations would not change. DOE estimates that the total inter-site transportation impact associated with transferring plutonium from the RFETS and Hanford to the SRS would be 0.07 potential latent cancer fatalities, which would be approximately the same as for the Preferred Alternative in the Storage and Disposition PEIS.[5] DOE estimates that the intra-site transportation activities could add an additional 0.01 latent cancer fatalities to the worker population.[6]

• Air Quality and Noise. Storage: Accomplishing the proposed action, including the modifications to Building 105-K, would add no significant air quality and noise impacts above the existing site baseline. Therefore, air quality and noise impacts from the plutonium storage aspects of the proposed action would be essentially the same as the air quality and noise impacts from the Preferred Alternative of the Storage and Disposition PEIS (i.e., the Upgrade With RFETS Non-Pit Material alternative).

Declassification/Repackaging: DOE estimates there would be a small increase in non-radiological air emissions for declassification operations (i.e., metal conversion operations in FB-Line) above the non-radiological air emissions estimated for the No Action and the Upgrade alternatives in the Storage and Disposition PEIS. Non-radiological air emissions would be well within State and Federal regulatory limits. Repackaging activities are not expected to involve the use of chemicals, beyond a very small amount of decontamination liquid.

• Water Resources. *Storage:* The maximum impact to water resources, above existing site baseline usage and discharges, expected from plutonium storage aspects of DOE's proposed action would be about the same as presented in the Upgrade With RFETS and LANL Material alternative of the Storage and Disposition PEIS,[7] i.e., there would be a 0.01% increase in water use and a 0.1% increase in waste water discharges. The water impacts from the proposed action would have a negligible effect on site water or waste treatment capacity.

The impacts of radiological liquid discharges from Building 105-K are included as part of the No Action alternative in the Storage and Disposition PEIS. DOE expects there would be no significant increase above the No Action alternative discharge levels since, during normal operations, water is not in contact with plutonium storage containers.

Declassification/Repackaging: DOE estimates declassification operations would cause a small and insignificant increase in water usage beyond the water requirement estimated for other site operations.

Repackaging activities in the APSF are expected to have essentially no impact to water resources beyond the site base line operations presented in the No Action alternative of the Storage and Disposition PEIS.[8] Repackaging operations would not significantly increase the use of water resources beyond that required to operate the industrial systems associated with the APSF, e.g., chillers for air conditioning, sanitary sewer, potable water, etc., because additional water is not used in repackaging operations.

• Socioeconomics. *Storage:* The socioeconomic impact of operating Building 105–K for plutonium storage would be essentially the same as the impact described for the Preferred Alternative of the Storage and Disposition PEIS. The socioeconomic impact of modifying Building 105–K and operating both APSF and Building 105–K would be well within the impacts described for the Consolidation alternative of the Storage and Disposition PEIS.

The socioeconomic impacts at RFETS and Hanford of moving surplus plutonium to SRS were analyzed in the Storage and Disposition PEIS. The analysis concluded that this action would phase out plutonium storage at RFETS and Hanford. Approximately 200 direct job losses at Hanford, in addition to the 2000 at RFETS, would result. Compared to the total employment in those areas, the loss of these jobs and the impacts to the regional economies would not be significant. The proposed action would not change the magnitude of these impacts at RFETS, but cause them to occur sooner.

Declassification/Repackaging: DOE estimates there would be negligible additional socioeconomic effects due to operating the APSF for repackaging of RFETS plutonium or operating FB-Line for declassification purposes because the existing site workforce would be used.

• Public and Occupational Health and Safety (normal operations). *Storage. Public and Non-Involved Workers:* Plutonium storage operations in Building 105–K would not result in any additional air or water radiological impacts (beyond those currently associated with other operations in Building 105–K) because no shipping containers or storage containers would be opened in Building 105–K. Since air and water emissions create impacts that affect the non-involved workers and the public, there would be no significant additional radiological impact to the public or non-involved workers from normal operations in Building 105–K. Therefore, the impact from the proposed action to the public and non-involved workers would be essentially the same as the impact from the Preferred Alternative in the Storage and Disposition PEIS.

Involved Workers: DOE estimated that the potential health impact from 50 years of APSF storage to individual involved workers for the Preferred Alternative in the Storage and Disposition PEIS was a latent cancer fatality risk of $5x10^{-3}$ and that $1.5x10^{-1}$ latent cancer fatalities could occur in the involved worker population. DOE estimates that the potential health impacts from 10 years of operating Building 105–K to store plutonium could result in a risk of latent cancer

[5] The impact is the sum of the impact of transportation of RFETS non-pit plutonium under the Preferred Alternative in the Storage and Disposition PEIS and the incremental impact for shipping the Hanford plutonium.

[6] In inter-site transportation analyses, non-radiological accidents would be the greatest contributor to fatalities. In the case of intra-site transportation, impacts would be due primarily to radiation doses received from normal transportation operations. Effects from intra-site accidents, if any, would likely be negligible. Historically, certified containers maintain their integrity in accident situations.

[7] Table 4.2.6.4–1 of the Storage and Disposition PEIS.

[8] Table 4.2.6.4–1 of the Storage and Disposition PEIS.

fatality for the average Building 105–K involved worker of $1.5x10^{-3}$ and $2.6x10^{-2}$ latent cancer fatalities in the Building 105–K involved worker population. Since the Storage and Disposition PEIS bases health impacts on 50 years of storage, for comparison purposes, the impacts from 50 years of plutonium storage in the APSF are added to the impacts from 10 years of plutonium storage in Building 105–K. Using this approach, the health impacts from storing plutonium in the APSF and in Building 105–K would be 0.18 latent cancer fatalities in the involved worker population of both facilities.

Health impacts to involved workers for the plutonium storage aspects of the proposed action in this Supplement Analysis (0.18 latent cancer fatalities) would be essentially the same as the health impact estimated in the Preferred Alternative of the Storage and Disposition PEIS (0.15 latent cancer fatalities).

Declassification/Repackaging Radiological Impacts. Public, Non-involved Workers, Involved Workers: For declassification operations the potential health effect from the postulated radiation dose to the maximally exposed member of the public at the Site boundary would be $1.7x10^{-6}$ latent cancer fatalities. The potential health effect from the postulated radiation dose to the population surrounding the SRS and to workers would be 0.068 latent cancer fatalities and 0.078 latent cancer fatalities, respectively, above those predicted in the Preferred Alternative in the Storage and Disposition PEIS.

For repackaging operations (i.e., repackaging all plutonium from the RFETS in the APSF for 2 years) the potential health effect from the postulated radiation dose to the maximally exposed member of the public at the site boundary would be $7.5x10^{-12}$ latent cancer fatalities. The potential health effect from the postulated radiation dose to the population surrounding the SRS and to workers would be $1.5x10^{-7}$ latent cancer fatalities and $2.5x10^{-2}$ latent cancer fatalities, respectively, above those predicted in the Preferred Alternative in the Storage and Disposition PEIS. The impacts from repackaging, only the RFETS plutonium that would be declassified in the FB-Line would be less.

Building 105–K Modification. Public, Non-Involved Workers, Involved Workers: No impacts to non-involved workers or the public would be expected from the decontamination, modification, removal, and construction work because this work is not expected to generate significant air or water emissions. Work activities are confined to the interior of Building 105–K and airborne radioactivity levels are routinely monitored during work. Liquid sources would not be released from the building during normal decontamination, removal, or construction work. The potential health impact to workers, in the form of the risk of latent cancer fatality, would be $4x10^{-4}$ for 18 months of decontamination and construction work and the number of latent cancer fatalities that could be expected in the worker population was estimated to be $2x10^{-2}$. The risks associated with the modification of Building 105–K are approximately ten percent of the risks estimated for storage of the plutonium in the Preferred Alternative of the Storage and Disposition PEIS.

Summary

Public: In the Storage and Disposition PEIS, DOE estimated the potential health impact to the population surrounding the SRS from existing site operations and for the Upgrade Alternative over 50 years was 1.1 latent cancer fatalities. Accomplishing the new proposed action would slightly increase that potential health impact to about 1.2 latent cancer fatalities. Emissions would remain within the limits of the National Emission Standards for Hazardous Air Pollutants permits for the APSF and Building 105–K.

Workers: In the Storage and Disposition PEIS, DOE estimated that the potential health impact to the total site workforce from existing site operations over 50 years would be 5.3 latent cancer fatalities. Accomplishing the proposed action would increase the potential health impact to the site workforce by 0.3 to 5.6 latent cancer fatalities. This new estimate in total site workforce health impact is slightly greater than the health impact of 5.3 latent cancer fatalities estimated for the Preferred Alternative in the Storage and Disposition PEIS and is slightly lower than the health impact of 5.7 latent cancer fatalities that DOE estimated for the Consolidation alternative in the Storage and Disposition PEIS.

Storage Chemical Impacts. There would be no significant impact to the public or workers from hazardous chemicals due to plutonium storage operations in Building 105–K. There are no industrial systems or other operations involved in the plutonium storage operations that would add to existing Building 105–K chemical impacts.

- Waste Management. Modifications to Building 105–K: DOE estimates that decontamination and removal activities which would make Building 105–K available for storage operations would generate 750 cubic meters of low level waste, which is less than 1% of the low-level waste DOE expects to be generated by SRS activities as described in the No Action alternative of the Storage and Disposition PEIS. DOE does not expect to generate any significant quantities of other wastes in order to modify Building 105–K. No high-level radioactive waste would be generated.

Storage: DOE estimated that storing plutonium in the APSF, as described in the Preferred Alternative of the Storage and Disposition PEIS, would not generate any of the following radioactive wastes: high-level, transuranic, mixed transuranic, low-level, mixed low-level or hazardous (other than minor quantities). DOE estimates that storing plutonium in Building 105–K would not significantly change the estimate for the Preferred Alternative in the Storage and Disposition PEIS.

Declassification/Repackaging: DOE estimates that declassifying RFETS plutonium would generate about: 88 m^3 of transuranic waste; 4 m^3 of mixed waste; and 44 m^3 of low-level radioactive waste. No high-level waste is expected. These additional amounts of waste represent a small fraction of these types of waste that are generated at the site by other operations. The site has sufficient capacity to accommodate this increase in waste volume.

- Accidents. *Storage:* For the Building 105–K design basis accidents, DOE estimated that the maximum impact to the population surrounding the SRS could be 0.34 latent cancer fatalities in the unlikely event that plutonium were released to the 105–K Building as a result of corrosion of a storage container. This risk is greater than the risk estimated for storage of plutonium in the Preferred Alternative and other alternatives of the S&D PEIS; however, the risk would be comparable to the same type of accident for the storage of plutonium at SRS in existing storage vaults as analyzed in the Continuing Storage Alternative for the Storage of Plutonium and Uranium in the IMNM EIS. (The IMNM accident analysis showed 0.31 latent cancer fatalities for the population surrounding SRS.) DOE will implement administrative controls (including scheduled surveillances) to limit actions or conditions that might lead to a release of radioactive materials under accident conditions. The risk to the maximally exposed member of the public and non-involved worker would also be greater than the risk for storage

of plutonium estimated in the Preferred Alternative and other alternatives of the Storage and Disposition PEIS but would be low (less than $3x10^{-3}$ latent cancer fatalities).

For the postulated beyond design basis accidents, DOE estimated that the maximum impact to the population could be $2.7x10^{-4}$ latent cancer fatalities in the event of a vault fire. This risk is greater than the risk estimated for storage of plutonium in the Preferred Alternative of the Storage and Disposition PEIS, but low. The risks to the maximally exposed public and the non-involved worker would also be greater than the risks for the storage of plutonium estimated in the Preferred Alternative of the Storage and Disposition PEIS but would be extremely small (less than $2x10^{-8}$ latent cancer fatalities). DOE estimated that the involved worker may be subject to injury and, in some cases, fatality as a result of potential beyond design basis accidents.

Declassification/Repackaging: DOE estimates that for declassification operation in the FB-Line, the risk to the public would be $1.2x10^{-3}$ latent cancer fatalities, $2.6x10^{-4}$ latent cancer fatalities to the maximally exposed off-site individual and $4.5x10^{-3}$ latent cancer fatalities/yr to the non-involved worker. These risks are slightly greater than the risks for storage of plutonium estimated in the Upgrade Alternative of the Storage and Disposition PEIS, but are low. For repackaging operations in the APSF, the risks are low and similar to the impacts presented for storage of plutonium in the Preferred Alternative of the Storage and Disposition PEIS (less than $2x10^{-4}$ latent cancer fatalities).

- *Environmental Justice.* For environmental justice impacts to occur, there must be significant and adverse human health or environmental impacts that disproportionately affect minority populations and/or low-income populations. The Supplement Analysis shows that accomplishing the proposed action would be within regulatory limits and the impacts would be very low during routine operations.

The same Supplement Analyses also shows that accidents would not result in a significant risk of adverse human health or environmental impacts to the population who reside within 80 kilometers of the SRS. Therefore, such accidents would not have disproportionately high or adverse risk of impacts on minority or low-income populations.

Based on the analysis in this supplement analysis, no disproportionate, high or adverse impact would be expected on minority or low-income populations.

C. Environmentally Preferable Alternative

The environmental analyses in Chapter 4 of the Storage and Disposition PEIS indicate that the environmentally preferable alternative (the alternative with the lowest environmental impacts over the 50 years considered in the PEIS) for storage of weapons-usable fissile materials would be the Storage and Disposition PEIS Preferred Alternative, which consists of No Action at Hanford, Idaho National Engineering and Environmental Laboratory, Los Alamos National Laboratory, Argonne National Laboratory, and Nevada Test Site (NTS) (no fissile materials are or would be stored at the NTS) pending disposition, phaseout of storage at RFETS, and upgrades at the Oak Ridge Reservation, SRS, and Pantex. The proposed action as modified by this amended decision is still the environmentally preferred alternative.

III. Non-Environmental Considerations

A. Economic Analysis

DOE has estimated that accelerating the closure of RFETS from 2010 to 2006 in accordance with the DOE Closure 2006 Rocky Flats Closure Project Management Plan could save as much as $1.3 billion. Closing RFETS by 2006 would require the removal of non-pit, surplus weapons-usable plutonium metal and oxide from RFETS by 2002. The early removal of the RFETS non-pit, surplus weapons-usable plutonium supports the early deactivation, decontamination, and decommissioning of the RFETS plutonium storage and packaging facilities.

DOE also expects that the transfer of non-pit, surplus weapons-usable plutonium from Hanford to the SRS, could save as much as $150 million in upgrade and operating costs for plutonium storage facilities at the Hanford Site. As with the RFETS plutonium, the transfer would not be accomplished unless DOE decided to locate the plutonium immobilization disposition facility at the SRS.

The implementation cost for the proposed action is estimated to be approximately $93 million.

B. Nonproliferation

From a nonproliferation standpoint, the highest standards for safeguards and security will be employed during transportation and storage. There is no change in this regard from the original PEIS ROD.

IV. Amended Decision

Consistent with the Preferred Alternative in the Storage and Disposition PEIS, and the Supplement Analysis, Storing Plutonium in the Actinide Packaging and Storage Facility and Building 105–K at the Savannah River Site (July 1998), the Department has decided to reduce, over time, the number of locations where the various forms of plutonium are stored, through a combination of storage alternatives in conjunction with a combination of disposition alternatives.

The Department has decided to modify those aspects of the Storage and Disposition ROD (62 FR 3014) concerning the storage of weapons-usable plutonium at RFETS and Hanford, pending disposition. Other aspects of the Storage and Disposition ROD remain unaltered. DOE has decided to:

- Modify an existing building (105–K) at SRS to allow the receipt and storage of RFETS non-pit, surplus weapons-usable plutonium.

If the Department decides to select SRS as the immobilization site in the SPD EIS ROD, then the Department will:

- Ship all RFETS non-pit, surplus weapons-usable plutonium (about 7 MT) to SRS beginning in about 2000 through about 2002;
- Store RFETS non-classified plutonium metal and/or parts in shipping containers in Building 105–K at SRS beginning in about 2000;
- For RFETS classified surplus metal and/or parts, declassify the material in the FB-Line facility and repackage the material in the APSF (after construction of the APSF in about 2001). In the FB-Line, the plutonium will be melted using existing facilities and equipment that are part of the plutonium metal production process for which FB-Line was designed;
- Store the declassified material in Building 105–K in shipping containers or the APSF vault if space is available;
- Ship all Hanford non-pit, surplus weapons-usable plutonium (approximately 4.6 metric tons) from about 2002 through 2005 and store this material in the APSF;
- Before shipment, all plutonium transported from RFETS (except for the classified metal and/or parts) and Hanford will be stabilized[9] and packaged in accordance with DOE Standard-3013–96, Criteria for Safe Storage of Plutonium Metals and Oxides for long-term storage. All shipments of plutonium, including the classified metal and parts, will be by SST in

[9] Hanford plutonium fuel that is stable would not need to be stabilized.

accordance with applicable DOE, U.S. Department of Transportation and U.S. Nuclear Regulatory Commission requirements and regulations. Plutonium will be packaged in certified Type B accident resistant packages for transport; and

- The RFETS and Hanford Material stored at SRS may be moved between Building 105–K and the APSF to allow for operational flexibility.

Some of the surplus plutonium at RFETS and Hanford, approximately 1 metric ton at each site, is currently under International Atomic Energy Agency (IAEA) safeguards as a component of the United States nonproliferation policy to remove weapons-usable fissile materials from use for defense purposes. DOE has designed the APSF for IAEA safeguards and intends that plutonium stored in the APSF will be available for IAEA safeguards. Surplus plutonium under IAEA safeguards at RFETS and Hanford that may be shipped to the SRS, will remain available for IAEA safeguards in the APSF. Since plutonium that may be stored in Building 105-K will remain in shipping containers and not be accessible for full IAEA safeguards controls (e.g., physical sampling, destructive analyses), DOE is considering, with the IAEA, the application of IAEA verification controls to ensure the plutonium stored in Building 105–K is not diverted for defense purposes. In addition, DOE intends, as indicated in the Storage and Disposition ROD, that DOE's program for surplus plutonium disposition will include IAEA verification as appropriate.

If the DOE decides to pursue the No Action alternative for the disposition of surplus plutonium, the SRS, RFETS, and Hanford materials would remain in storage at their current sites in accordance with the No Action alternative in the Storage and Disposition PEIS ROD. If the DOE decides to immobilize surplus plutonium at Hanford, the SRS and RFETS materials would be shipped to Hanford in accordance with the decisions reached in the SPD EIS ROD.

V. Conclusion

Under the previous ROD, a maximum of 10 metric tons of surplus plutonium, including plutonium from RFETS and existing onsite plutonium, would be stored at SRS in the APSF, pending disposition, provided that SRS is selected as the immobilization site following completion of the SPD EIS. Transfer of plutonium from RFETS to SRS would begin when the APSF is completed in 2001.

With this amended ROD, a total of approximately 11.6 metric tons of surplus plutonium from both Hanford and RFETS (in addition to existing onsite SRS surplus plutonium, for a total of approximately 14 metric tons of surplus plutonium) would be stored at SRS in the APSF and Building 105–K, pending disposition, provided SRS is selected as the immobilization site. Transfer of plutonium from RFETS to SRS would begin when the modifications to Building 105–K are completed, i.e., in about 2000; shipments of plutonium from Hanford to SRS would begin in about 2002.

DOE has decided to implement a revised program to provide for safe and secure storage of weapons-usable fissile materials. DOE will prepare to advance the consolidation of the storage of weapons-usable plutonium by modifying existing facilities at the SRS in South Carolina, and phasing out surplus plutonium storage at RFETS in Colorado and Hanford in Washington. Consistent with the Storage and Disposition PEIS ROD, this Amended ROD supports the Department's objectives to phase out the storage of all weapons-usable plutonium at the RFETS and Hanford as soon as possible and to reduce the number of sites where surplus weapons-usable plutonium is stored.

The decision process reflected in this Notice complies with the requirements of the National Environmental Policy Act (NEPA) (42 U.S.C. 4321 *et seq.*) and its implementing regulations in 40 CFR Parts 1500–1508 and 10 CFR Part 1021.

Issued in Washington, D.C., August 6, 1998.

Laura S. H. Holgate,

Director, Office of Fissile Materials Disposition.

[FR Doc. 98–21744 Filed 8–12–98; 8:45 am]

BILLING CODE 6450–01–P

DEPARTMENT OF ENERGY

Environmental Management Site-Specific Advisory Board, Pantex Plant, Amarillo, Texas

AGENCY: Department of Energy.

ACTION: Notice of open meeting.

SUMMARY: Pursuant to the provisions of the Federal Advisory Committee Act (Pub. L. No. 92–463, 86 Stat. 770) notice is hereby given of the following Advisory Committee meeting: Environmental Management Site-Specific Advisory Board (EM SSAB), Pantex Plant, Amarillo, Texas.

DATE AND TIME: Tuesday, August 25, 1998: 1:30 p.m.–5:30 p.m.

ADDRESSES: Amarillo Association of Realtors, Amarillo, Texas.

FOR FURTHER INFORMATION CONTACT: Jerry S. Johnson, Assistant Area Manager, Department of Energy, Amarillo Area Office, P.O. Box 30030, Amarillo, TX 79120 (806) 477–3125.

SUPPLEMENTARY INFORMATION: *Purpose of the Committee:* The Board provides input to the Department of Energy on Environmental Management strategic decisions that impact future use, risk management, economic development, and budget prioritization activities.

Tentative Agenda

1:30 p.m. Welcome—Agenda Review—Approval of Minutes
1:45 p.m. Co-Chair Comments
2:00 p.m. Immobilization
3:00 p.m. Break
3:15 p.m. Updates—Occurrence Reports—DOE
3:45 p.m. Ex-Officio Reports
4:00 p.m. Low-Level Waste Seminar Update
5:00 p.m. Task Force/Subcommittee Minutes
5:30 p.m. Closing Remarks/Adjourn

Public Participation: The meeting is open to the public, and public comment will be invited throughout the meeting. Written statements may be filed with the Committee either before or after the meeting. Written comments will be accepted at the address above for 15 days after the date of the meeting. Individuals who wish to make oral statements pertaining to agenda items should contact Jerry Johnson's office at the address or telephone number listed above. Requests must be received 5 days prior to the meeting and reasonable provision will be made to include the presentation in the agenda. The Designated Federal Official is empowered to conduct the meeting in a fashion that will facilitate the orderly conduct of business. Each individual wishing to make public comment will be provided a maximum of 5 minutes to present their comments at any time throughout the meeting.

Minutes: The minutes of this meeting will be available for public review and copying at the Pantex Public Reading Rooms located at the Amarillo College Lynn Library and Learning Center, 2201 South Washington, Amarillo, TX phone (806) 371–5400. Hours of operation are from 7:45 am to 10:00 pm, Monday through Thursday; 7:45 am to 5:00 pm on Friday; 8:30 am to 12:00 noon on Saturday; and 2:00 pm to 6:00 pm on Sunday, except for Federal holidays. Additionally, there is a Public Reading Room located at the Carson County Public Library, 401 Main Street,

Panhandle, TX phone (806) 537–3742. Hours of operation are from 9:00 am to 7:00 pm on Monday; 9:00 am to 5:00 pm, Tuesday through Friday; and closed Saturday and Sunday as well as Federal Holidays. Minutes will also be available by writing or calling Jerry S. Johnson at the address or telephone number listed above.

Issued at Washington, DC on August 10, 1998.

Althea T. Vanzego,

Acting Deputy Advisory Committee Management Officer.

[FR Doc. 98–21742 Filed 8–12–98; 8:45 am]

BILLING CODE 6450–01–P

DEPARTMENT OF ENERGY

[Docket No. FE C&E 98–05—Certification Notice—160]

Office of Fossil Energy; Tenaska Frontier Partners, Ltd. Notice of Filing of Coal Capability Powerplant and Industrial Fuel Use Act

AGENCY: Office of Fossil Energy, Department of Energy.

ACTION: Notice of filing.

SUMMARY: On July 20, 1998, Tenaska Frontier Partners, Ltd. submitted a coal capability self-certification pursuant to section 201 of the Powerplant and Industrial Fuel Use Act of 1978, as amended.

ADDRESSES: Copies of self-certification filings are available for public inspection, upon request, in the Office of Coal & Power Im/Ex, Fossil Energy, Room 4G–039, FE–27, Forrestal Building, 1000 Independence Avenue, S.W., Washington, D.C. 20585.

FOR FURTHER INFORMATION CONTACT: Ellen Russell at (202) 586–9624.

SUPPLEMENTARY INFORMATION: Title II of the Powerplant and Industrial Fuel Use Act of 1978 (FUA), as amended (42 U.S.C. 8301 *et seq.*), provides that no new baseload electric powerplant may be constructed or operated without the capability to use coal or another alternate fuel as a primary energy source. In order to meet the requirement of coal capability, the owner or operator of such facilities proposing to use natural gas or petroleum as its primary energy source shall certify, pursuant to FUA section 201(d), to the Secretary of Energy prior to construction, or prior to operation as a base load powerplant, that such powerplant has the capability to use coal or another alternate fuel. Such certification establishes compliance with section 201(a) as of the date filed with the Department of Energy. The Secretary is required to publish a notice in the **Federal Register** that a certification has been filed. The following owner/operator of the proposed new baseload powerplant has filed a self-certification in acccordance with section 201(d).

Owner: Tenaska Frontier Partners, Ltd.

Operator: Tenaska Frontier Partners, Ltd.

Location: Grimes County, Texas.

Plant Configuration: Combined-Cycle.

Capacity: 800 megawatts.

Fuel: Natural gas.

Purchasing Entities: PECO Energy.

In-Service Date: May, 2000.

Issued in Washington, D.C., July 31, 1998.

Anthony J. Como,

Director, Electric Power Regulation, Office of Coal & Power Im/Ex, Office of Coal & Power Systems, Office of Fossil Energy.

[FR Doc. 98–21743 Filed 8–12–98; 8:45 am]

BILLING CODE 6450–01–P

DEPARTMENT OF ENERGY

Federal Energy Regulatory Commission

[Docket No. CP98–704–000]

Florida Gas Transmission Company; Notice of Request Under Blanket Authorization

August 7, 1998.

Take notice that on July 31, 1998, Florida Gas Transmission Company (FGT), filed in Docket No. CP98–704–000 a request for authorization pursuant to sections 157.205 and 157.212 of the Commission's Regulations under the Natural Gas Act (18 CFR 157.205 and 157.212) to construct, own, and operate a new delivery point, PGS-Worthington Springs, on its system to accommodate deliveries of natural gas to the State of Florida, Department of Corrections (The State), under FGT's blanket certificate issued in Docket No. CP82–553–000 pursuant to section 7(c) of the Natural Gas Act, all as more fully set forth in the request that is on file with the Commission and open to public inspection.

Specifically, FGT proposes to construct, own, and operate a new tap, electronic flow measurement (EFM) equipment and approximately 100 feet of 2-inch connecting pipeline in Union County, Florida to deliver natural gas for the State of Florida through a new meter station and 6.25 miles of 4-inch non-jurisdictional pipeline constructed, owned, and operated by TECO Peoples Gas Inc. (TECO). FGT asserts that the new delivery point will be added to the existing FTS–1 Service Agreement between FGT and The State to allow deliveries of natural gas to TECO's new meter station.

FGT states that this new delivery point will not increase the contractual gas quantities nor increase the current certificated level of service under the existing FTS–1 Service Agreements. FGT estimates the total cost of the proposed construction to be approximately $76,000, inclusive of tax gross-up. FGT indicates that TECO will reimburse FGT for all costs directly and indirectly incurred by FGT for the construction of the new delivery point.

Any person or the Commission's staff may, within 45 days after issuance of the instant notice by the Commission, file pursuant to Rule 214 of the Commission's Procedural Rules (18 CFR 385.214) a motion to intervene or notice of intervention and pursuant to Section 157.205 of the Regulations under the Natural Gas Act (18 CFR 157.205) a protest to the request. If no protest is filed within the time allowed therefor, the proposed activity shall be deemed to be authorized effective the day after the time allowed for filing a protest. If a protest is filed and not withdrawn within 30 days after the time allowed for filing a protest, the instant request shall be treated as an application for authorization pursuant to Section 7 of the Natural Gas Act.

David P. Boergers,

Secretary.

[FR Doc. 98–21683 Filed 8–12–98; 8:45 am]

BILLING CODE 6717–01–M

DEPARTMENT OF ENERGY

Federal Energy Regulatory Commission

[Project No. 2680–039]

Consumers Energy Company and the Detroit Edison Company; Notice of Availability of Final Environmental Assessment

August 7, 1998.

A final environmental assessment (FEA) is available for public review. The FEA is for an application to construct Lake Michigan angler access facilities in Ottawa County, Michigan. The proposed action involves the construction of a 2,500-foot boardwalk and 31-car parking area, at the Port Sheldon site, near the Town of West Olive, Michigan. A draft environmental assessment (DEA) of this application and Notice of Availability of the DEA were issued by the Commission on September 22, 1997. The FEA, like the DEA, finds that approval of the proposed action would not constitute a major federal action significantly

affecting the quality of the human environment.

The FEA was written by staff in the Office of Hydropower Licensing, Federal Energy Regulatory Commission. Copies of the FEA can be obtained by calling the Commission's Public Reference room at (202) 208–1371.

David P. Boergers,

Secretary.

[FR Doc. 98–21682 Filed 8–12–98; 8:45 am]

BILLING CODE 6717–01–M

DEPARTMENT OF ENERGY

Federal Energy Regulatory Commission

[Project No. 4316–027 Colorado]

Galloway, Inc.; Notice of Availability of Environmental Assessment

August 7, 1998.

In accordance with the National Environmental Policy Act of 1969 and the Federal Energy Regulatory Commission's (Commission's) regulations, 18 CFR part 380 (Order 486, 52 F.R. 47897), the Commission's Office of Hydropower Licensing has reviewed the license surrender application for the Blue Valley Ranch Project, No. 4316–027. The Blue Valley Ranch Project is located on the Blue River in Grand County, Colorado. The license is being surrendered because the licensee has determined that it is not feasible to rehabilitate the project. An Environmental Assessment (EA) was prepared, and the EA finds that surrendering the license would not constitute a major federal action significantly affecting the quality of the human environment.

Copies of the EA are available for review in the Commission's Reference and Information Center, Room 2A, 888 First Street, NE., Washington, DC 20426. For further information, please contact Ms. Hillary Berlin, at (202) 219–0038.

David P. Boergers,

Secretary.

[FR Doc. 98–21681 Filed 8–12–98; 8:45 am]

BILLING CODE 6717–01–M

DEPARTMENT OF ENERGY

Federal Energy Regulatory Commission

Notice of Meeting on Midwest Electric Pricing Issues

August 7, 1998.

Take notice that members of the Federal Energy Regulatory Commission (Commission) will meet with Midwest state utility commission members and officials of the National Association of Regulatory Utility Commissioners to discuss pricing issues arising from circumstances that existed in electric power markets in the Midwest during the last week of June, 1998.

The meeting will be open to the public. State and federal commissioners and their representatives will participate in the discussion. In addition, the Commission expects to hear presentations from representatives of the Edison Electric Institute, the American Public Power Association, the Electric Power Supply Association, the Electricity Consumers Resource Council, and the National Rural Electric Cooperatives Association. A transcript will be made of the proceedings.

The meeting will be held from 9:00 a.m. until 12:00 noon (CDT) on August 14, 1998. The location of the meeting will be the Rosemont Convention Center, 5555 North River Road, Rosemont, Illinois 60018 (Phone: (847) 692–2220).

Linwood A. Watson, Jr.,

Acting Secretary.

[FR Doc. 98–21684 Filed 8–12–98; 8:45 am]

BILLING CODE 6717–01–M

ENVIRONMENTAL PROTECTION AGENCY

[FRL–6144–1]

Science Advisory Board, Notification of Public Advisory Committee Meetings

AGENCY: Environmental Protection Agency (EPA).

ACTION: Notice.

SUMMARY: Pursuant to the Federal Advisory Committee Act, Public Law 92–463, notification is hereby given that two committees of the Science Advisory Board (SAB) will meet on the dates and times described below. All times noted are Eastern Time. All meetings are open to the public, however, due to limited space, seating at meetings will be on a first-come basis. For further information concerning specific meetings, please contact the individuals listed below. Documents that are the subject of SAB reviews are normally available from the originating EPA office and are *not* available from the SAB Office.

1. Integrated Human Exposure Committee (IHEC)

The Integrated Human Exposure Committee (IHEC) of the Science Advisory Board (SAB) will meet on Thursday, September 3 and Friday September 4, 1998, beginning no earlier than 9 am and ending no later than 5 pm on each day. The meeting will be held at the Sheraton City Centre Hotel at 1143 New Hampshire Avenue, NW, Washington, DC 20037. The hotel is Metro accessible. For directions, please call the hotel at 202–775–0800.

Purpose—The purpose of the meeting is to review the methodologies for the Basic Relative Burden Analysis Methodology (BRBA), the Enhanced Relative Burden Analysis Methodology (ERBA), and the Cumulative Outdoor Toxics Concentration and Exposure Methodology (COATCEM) for scientific merit.

Charge—The IHEC has been asked to respond to the following Charge questions presented in the document, Questions for the Science Advisory Board on the Title VI Relative Burden Analyses and the Cumulative Outdoor Air Toxics Concentration and Exposure Methodology, referred hereafter as ''the review document.'' The following charge questions are from the review document which provides the necessary context for each question. Instructions for obtaining copies of the review document are provided below.

I. Regarding the Relative Burden Analyses

Charge Question #1: The Risk Screening Environmental Indicators (RSEI) toxicity weights that Office of Pollution Prevention and Toxics (OPPT) developed have been reviewed and commented upon by the SAB within the past year (EPA-SAB-EEC-98–007). OPPT has addressed the major concerns of the SAB as to having the weights ordered on a continuous scale directly related to their toxicity values rather than in order of magnitude ''bins'' and avoiding truncation of the value range. The use of these weights for the specific purpose of doing relative burden analyses in the way outlined in the review document has not been commented upon by the SAB. What are the strengths and weaknesses of this approach, which applies the toxicity weights to a number of chemicals released into the air, for the purpose of developing a burden measure?

Charge Question #2: The Basic Relative Burden Analysis (BRBA) method is relatively simple and may not consider important parameters such as relative proximity, weather, stack height. Please provide comment on the strengths, weaknesses, and utility of the ''basic'' method in estimating the distribution of burden to areas proximate to facilities with air emissions.

Charge Question #3: The Enhanced Relative Burden Analysis (ERBA) method was an extension of the BRBA by using the Industrial Source Complex—Long Term, Version 2 (ISCLT2), a standard air model, to model the toxicity-weighted air emissions from each facility. The toxicity-weighted air emissions are modeled as if they were one ''pseudo-chemical,'' although stack and fugitive emissions were treated separately for each facility. This approach has been adopted in order to make more manageable the screening evaluation of potentially hundreds of chemicals and multiple sources. Please provide comment on the utility and limitations of modeling several chemicals simultaneously as one pseudo-chemical with the model. If individual chemical properties would make this modeling method problematic, which classes of air release chemicals are likely to need to be modeled separately? Within the relatively small geographic areas analyzed, will atmospheric degradation play a major factor in the analysis?

Charge Question #4: In the ERBA method, modeling of the air emissions was truncated at 2, 4, or 6 miles. For example, in the 4-mile run, burden was added to census blocks within 4 miles from each facility, but not beyond that, and correspondingly for the 2- and 6-mile runs. Computationally, the number of census blocks potentially affected increases dramatically with increasing radius from the facility and the burden values drop off as the radius increases. (For example, with 314 facilities in Louisiana, the total number of census block-facility combinations within 6 miles of any facility was over 300,000.) What are the strengths and weaknesses of limiting the modeling to a certain radius from the facility for the purpose of evaluating burden, and specifically, 2, 4, or 6 miles?

Charge Question #5: Please provide comment on the strengths and weaknesses of the ERBA methods for analyzing the relative burdens from airborne emissions from nearby facilities for one population subgroup versus another in populations proximate to fixed air emissions sources?

Charge Question #6: The average toxicity weighted concentration, or burden, for each census block has been calculated. Please provide comment on the strengths and weaknesses of additional information which can be derived from the BRBA and ERBA methods, such as ranking census blocks in the state or smaller geographic area by average burden value or comparing the average burden in blocks near one facility to those near another for the purpose of identifying potential problem areas.

Charge Question #7: What are the strengths and weaknesses of the BRBA methodology for assessing relative impacts on population subgroups?

Charge Question #8: What are the strengths and weaknesses of the ERBA methodology assessing relative impacts on population subgroups?

Charge Question #9: Please provide comment on the appropriateness of the review document's interpretation of the Relative Burden Ratio, given the methodology and data used?

Charge Question #10: Please provide comment on the strengths and weaknesses of the ERBA method of estimating general risk and hazard numbers from concentration burdens and its utility for screening out *de minimis* burdens.

II. Regarding the Cumulative Outdoor Air Toxics Concentration and Exposure Methodology (COATCEM)

Charge Question #11: The ambient concentration modeling methodology associated with COATCEM is similar to that used in several previous studies conducted by EPA and reviewed by the SAB (e.g., EPA–SAB–IHEC–96–004; EPA–SAB–EEC–98–007). Are there any assumptions or input data involved in the COATCEM approach which would change the SAB's earlier judgements? Please provide comment on the strengths and weaknesses of the approach for assessing concentrations for the disparate impact analysis given the large number of sources and chemicals considered in the analysis?

Charge Question #12: Please provide comment on the strengths and weaknesses of the COATCEM method for: (1) evaluating the relative burdens from airborne emissions from nearby facilities for one group versus another in a population proximate to fixed air emissions sources, and (2) its utility in screening out *de minimis* burdens.

Charge Question #13: The BRBA, ERBA, and COATCEM approaches described in the review document may be applied to various geographic scales (*e.g.*, national, regional, state, basin, county, place) and collections of sources. Given the inherent uncertainties described in the review document, please comment on how the results of the analysis relate to the resolution of the input data, the varying geographic scales, and numbers of sources being analyzed.

Charge Question #14: Overall, what are the other major uncertainties involved in using the BRBA, ERBA, and COATCEM methods? Are there situations where these methods would have to be modified because the models or approaches used are not suitable? What research or improvements in the methodologies would be most helpful to focus upon in the next few years?

Background—Title VI of the Civil Rights Act of 1964 as amended (Title VI) prohibits recipients of Federal financial assistance (such as state environmental departments) from discriminating on the basis of race, color, or national origin in their programs or activities. Title VI requires Federal agencies that provide financial assistance, including the Environmental Protection Agency (EPA), to ensure that recipients of Federal financial assistance do not discriminate on the basis of race, color, or national origin. Discrimination can result from policies and practices that are neutral on their face, but have the effect of discriminating. In addition to prohibiting intentional discrimination, EPA's Title VI regulations (40 CFR part 7) prohibit facially-neutral policies or practices that result in a disparate adverse impact, unless it is shown that they are justified and that there is no less discriminatory alternative.

Since 1993, EPA has received an increasing number of Title VI complaints that allege violations of EPA's discriminatory effects regulations from the issuance of pollution control permits by EPA recipients. EPA's Office of Civil Rights (OCR) currently has 15 open investigations, as well as 12 awaiting processing, of complaints which allege discriminatory effects of permitting decisions. On February 5, 1998, EPA released its Interim Guidance for Investigating Title VI Administrative Complaints Challenging Permits (Title VI Interim Guidance) which is an internal guidance document that describes how OCR will process these types of complaints. Generally, Title VI complaints are subject to the following process: (1) initial finding of disparate impact, (2) presentation of rebuttal evidence, (3) identification of legitimate justifications, and (4) identification of less discriminatory alternatives. EPA is currently focused on developing sound methods for establishing the first element of this process—the initial finding of disparate impact. OCR is interested in developing tools that can be used repeatedly with some ease so that ultimately they may be used by recipients and others as a means of identifying potential Title VI disparate impacts in the context of individual permit decisions.

The investigation and resolution of Title VI complaints regarding potential discriminatory effects of environmental permitting decisions is precedent-setting and may have implications on

how recipient agencies implement their environmental permitting programs to ensure no person is discriminated against based on race, color, or national origin. As a result, the issue of how to measure disparate adverse impacts from permitted facilities has had high visibility in the news media, as well as generated interest and debate within the industrial, state/local government, and environmental justice communities.

For Further Information—Copies of the review document and relevant background materials are not available from the SAB Staff. Single copies of these documents may be obtained from Ms. Jahleezah Eskew by telephone (202) 260–0507, by fax (202) 260–4580 or via E-mail at: eskew.jahleezah@epa.gov. The review document can also be obtained from the Internet at http://www.epa.gov/sab. Technical questions on these materials should be directed to Mr. Loren Hall by telephone at (202) 260–3931 or via E-mail at hall.loren@epa.gov.

Copies of SAB referenced reports (e.g., EPA–SAB–IHEC–98–004) may be obtained from the SAB staff at the address listed at the end of this notice.

The SAB has reserved a portion of its agenda in order to receive public comments on the scientific/technical issues associated with the disproportionate impact methodologies being reviewed by the IHEC. Comments on other matters reflect legitimate concerns but are not appropriate for this technical forum. Each individual speaker will be allotted five minutes for his/her presentation. Arrangements can be made for coordinated presentations from groups of speakers by contacting Ms. Roslyn Edson, Designated Federal Officer for the IHEC. Anyone wishing to make a brief oral presentation at the meeting must contact Ms. Edson, *in writing,* no later than 5:00 p.m. Eastern Daylight Time on August 25, 1998, at USEPA Science Advisory Board (1400), 401 M Street, SW, Washington, DC 20460, by fax (202) 260–7118, or via E-mail at edson.roslyn@epa.gov to request time on the agenda. The request should identify the name of the individual who will make the presentation, the organization he/she will represent (if any), and an outline of the issues to be addressed. In the event that the number of requests exceed the time available for oral comments, requests will be granted on the time of receipt in the SAB Office. All written comments will be accepted and provided to the IHEC Panel.

Oral, as well as written, commenters are expected to send twenty (20) copies of their written comments to Ms. Edson by August 26, so that they can be provided to and considered by individual IHEC Members and Consultants prior to the public meeting. In order to be most effective, oral public comments at the meeting should highlight, but not duplicate, written comments.

2. Executive Committee (EC)

The Science Advisory Board's (SAB) Executive Committee will conduct a public teleconference meeting on Friday, September 11, 1998, between the hours of 2 pm and 4 pm, Eastern Time. The meeting will be coordinated through a conference call connection in the Science Advisory Board Conference Room, Room 3709M, U.S. Environmental Protection Agency, 401 M Street SW, Washington, DC 20460. The public is welcome to attend the meeting physically or through a telephonic link. Additional instructions about how to participate in the conference call can be obtained by calling Ms. Priscilla Tillery-Gadson at (202) 260–4126 by September 4, 1998.

In this meeting the Executive Committee plans to review drafts from several of its Committees. These anticipated drafts include:

(a) Environmental Economics Advisory Committee's Advisory of the Economic Research Topics

(b) EC Models Subcommittee's Review of TRIM.FaTE Model

(c) Drinking Water Committee's Review of National Containment Occurance Database.

(d) EC Residual Risk Subcommittee's Review of the Agency's Residual Risk Report to Congress.

For Further Information—Any member of the public wishing further information concerning the meeting or wishing to submit comments should contact Dr. Donald G. Barnes, Designated Federal Officer for the Executive Committee, Science Advisory Board (1400), U.S. Environmental Protection Agency, Washington DC 20460; telephone (202) 260–4126; FAX (202) 260–9232; and via E-Mail at: barnes.don@epa.gov. Copies of the relevant documents are available from the same source. Draft documents will also be available on the SAB Website (http:///www.epa.gov/sab) at least one week prior to the meeting.

Providing Oral or Written Comments at SAB Meetings

The Science Advisory Board expects that public statements presented at its meetings will not repeat previously submitted oral or written statements. In general, each individual or group making an oral presentation will be limited to a total time of ten minutes. This time may be reduced at the discretion of the SAB, depending on meeting circumstances. Oral presentations at teleconferences will normally be limited to three minutes per speaker or organization. Written comments (at least 35 copies) received in the SAB Staff Office sufficiently prior to a meeting date, may be mailed to the relevant SAB committee or subcommittee prior to its meeting; comments received too close to the meeting date will normally be provided to the committee at its meeting. Written comments, which may of any length, may be provided to the relevant committee or subcommittee up until the time of the meeting.

The Science Advisory Board

Information concerning the Science Advisory Board, its structure, function, and composition, may be found in The FY1997 Annual Report of the Staff Director which is available from the SAB Committee Evaluation and Support Staff (CESS) by contacting US EPA, Science Advisory Board (1400), Attention: CESS, 401 M Street, SW, Washington, DC 20460 or via fax (202) 260–1889. Additional information concerning the SAB can be found on the SAB Home Page at: http://www.epa.gov/sab.

Copies of SAB prepared final reports mentioned in this **Federal Register** Notice may be obtained immediately from the SAB Home Page or by mail/fax from the SAB's Committee Evaluation and Support Staff at (202) 260–4126, or via fax at (202) 260–1889. Please provide the SAB report number when making a request.

Meeting Access

Individuals requiring special accommodation at SAB meetings, including wheelchair access, should contact the appropriate DFO at least five business days prior to the meeting so that appropriate arrangements can be made.

Dated: August 8, 1998.

Donald G. Barnes,

Staff Director, Science Advisory Board.

[FR Doc. 98–21705 Filed 8–12–98; 8:45 am]

BILLING CODE 6560–50–P

ENVIRONMENTAL PROTECTION AGENCY

[FRL–6143–8]

Notice of Proposed Administrative Settlement Pursuant to the Comprehensive Environmental Response, Compensation, and Liability Act

AGENCY: Environmental Protection Agency (EPA).

ACTION: Notice; request for public comment.

SUMMARY: In accordance with section 122(i) of the Comprehensive Environmental Response, Compensation, and Liability Act, as amended (''CERCLA''), 42 U.S.C. 9622(i), notification is hereby given of a proposed administrative settlement concerning the Cleve Reber Superfund Site, Ascension Parish, Louisiana with the following settling parties:

Vulcan Materials Company,
Uniroyal Chemical Company, Inc,.
Monochem Inc.,
Novartis Crop Protection, (as successor to Ciba-Geigy Corporation),
Rhone-Poulenc, Inc.,

The settlement require the settling parties to pay a total of $360,000 as payment of past response and certain future costs to the Hazardous Substances Superfund. The settlement includes a covenant not to sue pursuant to Section 107 of CERCLA, 42 U.S.C. 9607.

For thirty (30) days following the date of publication of this document, the Agency will receive written comments relating to the settlement. The Agency will consider all comments received and may modify or withdraw its consent to the settlement if comments received disclose facts or considerations which indicate that the settlement is inappropriate, improper, or inadequate. The Agency's response to any comments received will be available for public inspection at 1445 Ross Avenue, Dallas, Texas, 75202–2733.

DATES: Comments must be submitted on or before September 14, 1998.

ADDRESSES: The proposed settlement and additional background information relating to the settlements are available for public inspection at 1445 Ross Avenue, Dallas, Texas, 75202–2733. A copy of the proposed settlement may be obtained from Carl Bolden, 1445 Ross Avenue, Dallas, Texas, 75202–2733 at (214) 665–6713. Comments should reference the Cleve Reber Superfund Site, Ascension Parish, Louisiana and EPA Docket Number 6–30–98, and should be addressed to Carl Bolden at the address listed above.

FOR FURTHER INFORMATION CONTACT: James Costello, 1445 Ross Avenue, Dallas, Texas, 75202–2733 at (214) 665–8045.

Dated: August 5, 1998.

Myron O. Knudson, P.E.,

Acting Regional Administrator, Region 6.

[FR Doc. 98–21674 Filed 8–12–98; 8:45 am]

BILLING CODE 6560–50–P

FEDERAL ELECTION COMMISSION

Sunshine Act Meeting

AGENCY: Federal Election Commission.

DATE AND TIME: Tuesday, August 18, 1998 at 10:00 a.m.

PLACE: 999 E Street, N.W., Washington, D.C.

STATUS: This meeting will be closed to the public.

ITEMS TO BE DISCUSSED:

Complicance matters pursuant to 2 U.S.C. § 437g.

Audits conducted pursuant to 2 U.S.C. § 437g, § 438(b), and Title 26, U.S.C.

Matters concerning participation in civil actions or proceedings or arbitration.

Internal personnel rules and procedures or matters affecting a particular employee.

DATE AND TIME: Thursday, August 20, 1998, at 10:00 a.m.

PLACE: 999 E Street, N.W., Washington, D.C. (ninth floor).

STATUS: This meeting will be open to the public.

ITEMS TO BE DISCUSSED:

Correction and Approval of Minutes.

Advisory Opinion 1998–16: Restoring the American Dream by counsel, James Bopp.

Final Rules—Electronic Filing by Presidential Campaigns that Qualify Under Title 26 for Federal Funding.

Administrative Matters.

PERSON TO CONTACT FOR INFORMATION: Mr. Ron Harris, Press Officer, Telephone (202) 694–1220.

Marjorie W. Emmons,

Secretary of the Commission.

[FR Doc. 98–21778 Filed 8–10–98; 4:18 pm]

BILLING CODE 6715–01–M

FEDERAL EMERGENCY MANAGEMENT AGENCY

Open Meeting, Board of Visitors for the National Fire Academy

AGENCY: Federal Emergency Management Agency (FEMA).

ACTION: Notice of open meeting.

SUMMARY: In accordance with section 10 (a) (2) of the Federal Advisory Committee Act, 5 U.S.C. App. 2, FEMA announces the following committee meeting:

Name: Board of Visitors for the National Fire Academy.

Dates of Meeting: October 4–6, 1998.

Place: Building J, Room 264, National Emergency Training Center, Emmitsburg, Maryland.

Time: October 4, 1998, 10:30 a.m.–9:00 p.m.; October 5, 1998, 8:30 a.m.–5:00 p.m.; October 6, 1998, 8:30 a.m.–5:00 p.m.

Proposed Agenda: October 4, 1998, Attend National Fallen Firefighters Memorial Ceremony and Begin Review National Fire Academy Program Activities. October 5–6, 1998, Review National Fire Academy Program Activities and Prepare 1998 Annual Report.

SUPPLEMENTARY INFORMATION: The meeting will be open to the public with seating available on a first-come, first-served basis. Members of the general public who plan to attend the meeting should contact the Office of the Superintendent, National Fire Academy, U.S. Fire Administration, 16825 South Seton Avenue, Emmitsburg, MD 21727, (301) 447–1117, on or before September 25, 1998.

Minutes of the meeting will be prepared and will be available for public viewing in the Office of the Administrator, U.S. Fire Administration, Federal Emergency Management Agency, Emmitsburg, Maryland 21727. Copies of the minutes will be available upon request within 60 days after the meeting.

Dated: August 6, 1998.

Carrye B. Brown,

U.S. Fire Administrator.

[FR Doc. 98–21739 Filed 8–12–98; 8:45 am]

BILLING CODE 6718–01–P

FEDERAL EMERGENCY MANAGEMENT AGENCY

Open Meeting, Technical Mapping Advisory Council

AGENCY: Federal Emergency Management Agency (FEMA).

ACTION: Notice of meeting.

SUMMARY: In accordance with § 10(a)(2) of the Federal Advisory Committee Act, 5 U.S.C. App. 1, the Federal Emergency Management Agency gives notice that the following meeting will be held:

Name: Technical Mapping Advisory Council.

Date of Meeting: August 17–18, 1998.

Place: U.S. Geological Survey, 807 National Center, Reston, Virginia.

Time: 8:30 a.m. to 5:00 p.m., both days.

Proposed Agenda:

1. Call to order.
2. Announcements.
3. Action on minutes of previous 2 meetings.
4. Presentation by USGS about digital orthophoto quadrangle maps, stream gaging networks, and methodologies for updating flood inundation maps efficiently.
5. Update on FEMA's Map Modernization Program.
6. Discuss recommendations for use of future conditions hydrology.
7. Discuss recommendations for base maps.
8. Report on elevation certificate.
9. Discussion of 1998 Annual Report.
10. Adjournment.

Status: This meeting is open to the public.

FOR FURTHER INFORMATION CONTACT: Michael K. Buckley, P.E., Federal Emergency Management Agency, 500 C Street SW., room 421, Washington, DC 20472, telephone (202) 646–2756 or by facsimile at (202) 646–4596.

SUPPLEMENTARY INFORMATION: This meeting is open to the public with limited seating available on a first-come, first-served basis. Members of the general public who plan to attend the meeting should contact Sally Magee, Federal Emergency Management Agency, 500 C Street SW., room 444, Washington, DC 20472, telephone (202) 646–8242 or by facsimile at (202) 646–4596 on or before August 12, 1998.

Minutes of the meeting will be prepared and will be available upon request 30 days after they have been approved by the next Technical Mapping Advisory Council meeting.

Dated: August 7, 1998.

Michael J. Armstrong,

Associate Director for Mitigation.

[FR Doc. 98–21740 Filed 8–12–98; 8:45 am]

BILLING CODE 6718–04–P

GENERAL SERVICES ADMINISTRATION

Federal Supply Service; Solicitation of Third Party Logistics Services for Freight Shipment Test Pilot Project; Correction

AGENCY: Federal Supply Service, GSA.

ACTION: Notice of proposed solicitation for comment; correction.

SUMMARY: The General Services Administration published a document in the **Federal Register** of August 7, 1998 (63 FR 42402) (FR Doc. 98–21131), concerning a request for comments on the solicitation of third party logistics services for a freight shipment test pilot project. The document contained an incorrect telephone number in the **FOR FURTHER INFORMATION CONTACT** paragraph printed in the third column of page 42402. The corrected telephone number is as set forth below in the **FOR FURTHER INFORMATION CONTACT** paragraph.

FOR FURTHER INFORMATION CONTACT: Ms. Patricia Walker, Contract Management Division (4FQ–P), 401 West Peachtree Street, NW, Suite 2600, Atlanta, GA 30365, Telephone No. 404–331–3059.

Dated: August 7, 1998.

Richard M. Hoffman,

Senior Program Expert, Transportation Management Division.

[FR Doc. 98–21666 Filed 8–12–98; 8:45 am]

BILLING CODE 6820–24–M

DEPARTMENT OF HEALTH AND HUMAN SERVICES

Office of the Secretary

Request for Nominations for Members of the Secretary's Advisory Committee on Genetic Testing

AGENCY: Office of the Secretary, DHHS.

ACTION: Notice.

SUMMARY: The Department of Health and Human Services (DHHS) is soliciting nominations for qualified individuals to serve on the Secretary's Advisory Committee on Genetic Testing (SACGT).

DATES: Nomination packages should be submitted to Sarah Carr, Executive Secretary, SACGT, Office of Science Policy, National Institutes of Health, 9000 Rockville Pike, Building 1, Room 218, Bethesda, Maryland 20892, by August 31, 1998.

FOR FURTHER INFORMATION CONTACT: Sarah Carr, Executive Secretary, SACGT, Office of Science Policy, National Institutes of Health, 9000 Rockville Pike, Building 1, Room 218, Bethesda, Maryland 20892. Tel 301–496–1454.

SUPPLEMENTARY INFORMATION: The SACGT was established June 10, 1998 pursuant to the Federal Advisory Committee Act, as amended (5 U.S.C. Appendix 2). The SACGT will provide advice and make recommendations to the Secretary through the Assistant Secretary for Health on all aspects of the development and use of genetic tests. The scope of the Committee's charge includes recommending policies and procedures for the safe and effective incorporation of genetic technologies into health care; assessing the effectiveness of existing and future measures for oversight of genetic tests; and identifying research needs related to the Committee's purview. The decision to establish the SACGT is responsive to the recommendations of two prior advisory groups commissioned jointly by the National Institutes of Health (NIH) and the Department of Energy (DOE) for the Human Genome Project. The groups were the Task Force on Genetic Testing and the Joint NIH/DOE Committee to Evaluate the Ethnical, Legal, and Social Implications Program of the Human Genome Project.

Nominations

The SACGT's eleven non-governmental members and chair will be selected by the Secretary, or designee, from the fields of genetic testing, medical genetics, genetic counseling, ethics, law, primary health care, public health, clinical laboratory management, diagnostic technology, psychology, social sciences, and other relevant disciplines. At least one member will be specifically selected for knowledge/expertise as a patient/consumer advocate. To ensure coordination with existing committees of relevance, at least one member of the SACGT will be a current member of the Clinical Laboratory Improvement Advisory Committee, and at least one will be a current member of the Medical Devices Advisory Committee. SACGT members shall be invited to serve for overlapping terms of up to four years; terms of more than two years are contingent upon the renewal of the Committee by appropriate action prior to its termination.

Information Required

Individuals and organizations interested in submitting a nomination or nominations, should submit a nomination package that includes the following information for each nominee: (1) a letter of nomination stating the name, affiliation, and contact information for the nominee, the basis for the nomination (i.e., what specific attributes recommends him/her for service in this capacity), and the category of expertise the nominee would fulfill; (2) the name, return address, and daytime telephone number at which the nominator can be contacted; and (3) a biographical sketch of the nominee and a copy of his or her curriculum vitae.

All nomination information for a nominee must be provided in a

complete single package. Incomplete nominations cannot be considered. The nomination letter must bear an original signature; facsimile transmissions or copies cannot be accepted.

Dated: July 31, 1998.

David Satcher,

Assistant Secretary for Health and Surgeon General.

[FR Doc. 98–21788 Filed 8–12–98; 8:45 am]

BILLING CODE 4160–17–M

DEPARTMENT OF HEALTH AND HUMAN SERVICES

Centers for Disease Control and Prevention

Advisory Committee to the Director, National Center for Environmental Health: Notice of Charter Renewal

This gives notice under the Federal Advisory Committee Act (Pub. L. 92–463) of October 6, 1972, that the Advisory Committee to the Director, National Center for Environmental Health (ACD, NCEH), Centers for Disease Control and Prevention (CDC), Department of Health and Human Services, has been renewed for a 2-year period beginning August 2, 1998, through August 2, 2000.

For further information, contact Marilyn R. DiSirio, Executive Secretary, ACD, NCEH; CDC, 4770 Buford Highway, NE, (M/S F–29), Atlanta, Georgia 39341–3742, telephone 770/488–7020 or fax 770/488–7024.

Dated: August 7, 1998.

Carolyn J. Russell,

Director, Management Analysis and Services Office, Centers for Disease Control and Prevention (CDC).

[FR Doc. 98–21712 Filed 8–12–98; 8:45 am]

BILLING CODE 4861–18–P

DEPARTMENT OF HEALTH AND HUMAN SERVICES

Centers for Disease Control and Prevention

National Institute for Occupational Safety and Health (NIOSH) of the Centers for Disease Control and Prevention (CDC) Announces the Following Meeting

Name: Scaffolding as an Anchorage Point for Fall-Arrest Systems.

Time and date: 8:30 a.m.–6 p.m., September 22, 1998.

Place: Pittsburgh Airport Marriott, Coraopolis, Finley and Moore Rooms, 100 Aten Road, Coraopolis, Pennsylvania 15108.

Status: Open to the public, limited only by space available. The meeting room accommodates approximately 100 people, seating will be limited to approximately 70 people.

Purpose: To request public assistance in identifying useful, practical research design concepts to aid in determining under what conditions, if any, scaffolding can be used as a safe anchorage point for fall-arrest systems during erection and dismantling.

NIOSH is developing a research plan to investigate the use of scaffolding as a fall protection anchorage during scaffold erection and dismantling. This research will aid in determining under what circumstances, if any, it is advisable to use scaffolding as a fall protection anchorage. NIOSH is seeking individual input from scaffold and fall protection equipment manufacturers, scaffold erectors and users, regulatory agencies, and others on factors to be considered during the design of the research protocol.

The research will provide the public with information on the stability of scaffolding and the forces applied to scaffolding as a fall is arrested, for the cases tested. NIOSH researchers recognize that not all scaffold types and configurations, fall protection equipment, anchorage types and locations, and fall scenarios can be tested at one time. The research plan currently being developed will evaluate specific cases. It is anticipated that continuing research will evaluate additional cases. To make the research results as useful as possible, NIOSH researchers want to consider scaffold types and configurations, fall protection equipment, anchorage types and locations, and fall scenarios, that are or could be representative of practical scaffold use and any other input offered by the public that could improve the design of this research.

Contact person for additional information: Karl Snyder, NIOSH, CDC, M/S P119, 1095 Willowdale Road, Morgantown, West Virginia 26505, telephone 304/285–5898.

Dated: August 6, 1998.

Carolyn J. Russell,

Director, Management Analysis and Services Office, Centers for Disease Control and Prevention (CDC).

[FR Doc. 98–21711 Filed 8–12–98; 8:45 am]

BILLING CODE 4160–19–P

DEPARTMENT OF HEALTH AND HUMAN SERVICES

Administration for Children and Families

Proposed Information Collection Activity; Comment Request

Proposed Project

Title: Developmental Disabilities Council Program Performance Report.

OMB No.: 0980–0172.

Description: This information collection is a reporting by Developmental Disabilities Council (DD Council) programs in each State. Using this reporting format, the DD Councils describe their program performance against a backdrop of State trends during the previous fiscal year in the pursuit of their effort under Part B of the Developmental Disabilities Assistance and Bill of Rights Act (42 U.S.C., 6000 et seq.) to promote systems change in service systems for persons with developmental disabilities. This program performance report (PPR) is required by Section 107(a) of the Developmental Disabilities Assistance and Bill of Rights Act (42 U.S.C., 6000 *et seq.*).

The PPR is submitted by each DD Council to the Department of Health and Human Services, which use the data in the PPR to develop an annual report to President, the Congress, and the National Council on Disability, as required by Section 107(c) of the Developmental Disabilities Assistance and Bill of Rights Act (42 U.S.C., 6000 et seq.). Additionally, the data in the reports will provide the Department with an overview for good management of the program, and will enable the Department to respond to Congressional requests.

Respondents: State, Local or Tribal Government.

ANNUAL BURDEN ESTIMATES

Instrument	Number of respondents	Number of responses per respondent	Average burden hours per response	Total burden hours
DD Council Program Performance Report	55	1	44	2,420

Estimated Total Annual Burden Hours: 2,420.

In compliance with the requirements of Section 3506(c)(2)(A) of the Paperwork Reduction Act of 1995, the Administration for Children and Families is soliciting public comment on the specific aspects of the information collection described above.

Copies of the proposed collection of information can be obtained and comments may be forwarded by writing to the Administration for Children and Families, Office of Information Services, Division of Information Resource Management Services, 370 L'Enfant Promenade, S.W., Washington, D.C. 20447, Attn: ACF Reports Clearance Officer. All requests should be identified by the title of the information collection.

The Department specifically requests comments on: (a) whether the proposed collection of information is necessary for the proper performance of the functions of the agency, including whether the information shall have practical utility; (b) the accuracy of the agency's estimate of the burden of the proposed collection of information; (c) the quality, utility, and clarity of the information to be collected; and (d) ways to minimize the burden of the collection of information on respondents, including through the use of automated collection techniques or other forms of information technology. Consideration will be given to comments and suggestions submitted within 60 days of this publication.

Dated: August 10, 1998.

Bob Sargis,

Acting Reports Clearance Officer.

[FR Doc. 98–21787 Filed 8–12–98; 8:45 am]

BILLING CODE 4184–01–M

DEPARTMENT OF HEALTH AND HUMAN SERVICES

Food and Drug Administration

[Docket No. 98D–0389]

Agency Information Collection Activities: Proposed Collection; Comment Request; Notification of a Health Claim or a Nutrient Content Claim Based on an Authoritative Statement

AGENCY: Food and Drug Administration, HHS.

ACTION: Notice.

SUMMARY: The Food and Drug Administration (FDA) is announcing an opportunity for public comment on the proposed collection of certain information by the agency. Under the Paperwork Reduction Act of 1995, Federal agencies are required to publish notice in the **Federal Register** concerning each proposed collection of information, including each proposed extension of an existing collection of information, and to allow 60 days for public comment in response to the notice. This notice solicits comments on the submission of notifications of health claims or nutrient content claims based on authoritative statements of scientific bodies. This action is in response to provisions of the FDA Modernization Act of 1997 (FDAMA). In the **Federal Register** of August 6, 1998 (63 FR 42053), FDA published a notice announcing OMB's approval of this collection of information (OMB control number 0910—0374). Since this was an emergency approval that expires on November 30, 1998, FDA is following the normal PRA clearance procedures by issuing this notice.

DATES: Submit written comments on the collection of information by October 13, 1998.

ADDRESSES: Submit written comments on the collection of information to the Dockets Management Branch (HFA–305), Food and Drug Administration, 5630 Fishers Lane, Rockville, MD 20852. All comments should be identified with the docket number found in brackets in the heading of this document.

FOR FURTHER INFORMATION CONTACT: Margaret R. Schlosburg, Office of Information Resources Management (HFA–250), Food and Drug Administration, 5600 Fishers Lane, Rockville, MD 20857, 301–827–1223.

SUPPLEMENTARY INFORMATION: Under the PRA (44 U.S.C. 3501–3520), Federal agencies must obtain approval from the Office of Management and Budget (OMB) for each collection of information they conduct or sponsor. ''Collection of information'' is defined in 44 U.S.C. 3502(3) and 5 CFR 1320.3(c) and includes agency requests or requirements that members of the public submit reports, keep records, or provide information to a third party. Section 3506(c)(2)(A) of the PRA (44 U.S.C. 3506(c)(2)(A)) requires Federal agencies to provide a 60–day notice in the **Federal Register** concerning each proposed collection of information, including each proposed extension of an existing collection of information, before submitting the collection to OMB for approval. To comply with this requirement, FDA is publishing notice of the proposed collection of information set forth below.

With respect to the following collection of information, FDA invites comments on: (1) Whether the proposed collection of information is necessary for the proper performance of FDA's functions, including whether the information will have practical utility; (2) the accuracy of FDA's estimate of the burden of the proposed collection of information, including the validity of the methodology and assumptions used; (3) ways to enhance the quality, utility, and clarity of the information to be collected; and (4) ways to minimize the burden of the collection of information on respondents, including through the use of automated collection techniques, when appropriate, and other forms of information technology.

Notification of a Health Claim or a Nutrient Content Claim Based on an Authoritative Statement (OMB Control Number 0910–0347—Extension)

Section 403(r)(2)(G) and (r)(3)(C) of the Federal Food, Drug, and Cosmetic Act (the act) (21 U.S.C. 343(r)(2)(G) and (r)(3)(C)), as amended by FDAMA, provides that a food producer may

market a food product whose label bears a nutrient content claim or a health claim that is based on an authoritative statement of a scientific body of the Federal Government or the National Academy of Sciences. Under these sections of the act, a food producer that intends to use such a claim must submit a notification of its intention to use the claim 120 days before it begins marketing.

In the **Federal Register** of June 11, 1998 (63 FR 32102), FDA announced the availability of a guidance entitled ''Guidance for Industry: Notification of a Health Claim or Nutrient Content Claim Based on an Authoritative Statement of a Scientific Body.'' The guidance provides the agency's interpretation of terms central to the submission of a notification and the agency's views on the information that should be included in a notification. In addition to the information specifically required by the act to be in such notifications, the guidance states that the notifications should also contain information on analytical methodology for the nutrient that is the subject of a claim based on an authoritative statement.

FDA estimates the burden of this collection of information as follows:

TABLE 1.— ESTIMATED ANNUAL REPORTING BURDEN[1]

	No. of Respondents	Annual Frequency per Response	Total Annual Responses	Hours per Response	Total Hours
Guidance for Notifications	12	5	60	1	60

[1] There are no capital costs or operating and maintenance costs associated with this collection of information.

The agency believes that this guidance will enable food producers to meet the criteria for notifications that are established in section 403(r)(2)(G) and (r)(3)(C) of the act during the interim period while the agency is initiating notice-and-comment rulemaking in this matter. FDA intends to review the notifications it receives to ensure that they comply with the criteria established for them by the act.

These estimates are based on FDA's experience with health claims and nutrient content claims and with other similar notification procedures that fall under its jurisdiction. Because the claims are based on authoritative statements of certain scientific bodies of the Federal Government or the National Academy of Sciences or one of its subdivisions, FDA believes that the information submitted with a notification will be either provided as part of the authoritative statement or readily available to firms wishing to make claims.

The hour burden estimates contained in Table 1 of this document are for the information collection requests in the guidance only and do not include statutory requirements specifically mandated by the act.

Dated: August 6, 1998.

William K. Hubbard,

Associate Commissioner for Policy Coordination.

[FR Doc. 98–21796 Filed 8–12–98; 8:45 am]

BILLING CODE 4160–01–F

DEPARTMENT OF HEALTH AND HUMAN SERVICES

Food and Drug Administration

Joint Meeting of the Hematology and Pathology Devices Panel and the Immunology Devices Panel of the Medical Devices Advisory Committee; Notice of Meeting

AGENCY: Food and Drug Administration, HHS.

ACTION: Notice.

This notice announces a forthcoming meeting of a public advisory committee of the Food and Drug Administration (FDA). The meeting will be open to the public.

Name of Committee: Joint meeting of the Hematology and Pathology Devices Panel and the Immunology Devices Panel of the Medical Devices Advisory Committee.

General Function of the Committee: To provide advice and recommendations to the agency on FDA's regulatory issues.

Date and Time: The meeting will be held on September 4, 1998, 9:30 a.m. to 5 p.m.

Location: Corporate Bldg., conference room 020B, 9200 Corporate Blvd., Rockville, MD.

Contact Person: Veronica J. Calvin, Center for Devices and Radiological Health (HFZ09440), Food and Drug Administration, 2098 Gaither Rd., Rockville, MD 20850, 30109594091243, or FDA Advisory Committee Information Line, 10980009741098138 (30109443090572 in the Washington, DC area), code 12515. Please call the Information Line for up-to-date information on this meeting.

Agenda: The committee will discuss, make recommendations, and vote on a premarket approval application (PMA) for an immunohistochemical device indicated for the detection of HER2 overexpression in breast cancers.

Procedure: Interested persons may present data, information, or views, orally or in writing, on issues pending before the committee. Written submissions may be made to the contact person by August 21, 1998. Oral presentations from the public will be scheduled between approximately 9:45 a.m. and 10:15 a.m. Near the end of the committee deliberations, a 30-minute open public session will be conducted for interested persons to address issues specific to the submission or topic before the committee. Time allotted for each presentation may be limited. Those desiring to make formal oral presentations should notify the contact person before August 21, 1998, and submit a brief statement of the general nature of the evidence or arguments they wish to present, the names and addresses of proposed participants, and an indication of the approximate time requested to make their presentation.

Notice of this meeting is given under the Federal Advisory Committee Act (5 U.S.C. app. 2).

Dated: August 6, 1998.

Michael A. Friedman,

Deputy Commissioner for Operations.

[FR Doc. 98–21736 Filed 8–12–98; 8:45 am]

BILLING CODE 4160–01–F

DEPARTMENT OF HEALTH AND HUMAN SERVICES

Food and Drug Administration

[Docket No. 97D–0153]

Guidance on Accidental Radioactive Contamination of Human Food and Animal Feeds: Recommendations for State and Local Agencies; Availability

AGENCY: Food and Drug Administration, HHS.

ACTION: Notice.

SUMMARY: The Food and Drug Administration (FDA) is announcing the availability of a guidance entitled ''Accidental Radioactive Contamination of Human Food and Animal Feeds: Recommendations to State and Local Agencies.'' This guidance will replace the ''Accidental Radioactive Contamination of Human Foods and Animal Feeds: Recommendations to State and Local Agencies'' issued in 1982 to State and local agencies responsible for taking protective actions in the event that an incident causes the contamination of human food or animal feeds. FDA has a responsibility to issue guidance on planning actions for evaluating and preventing contamination of human food and animal feeds and on the control and use of these products should they become contaminated.

DATES: Written comments may be submitted at any time.

ADDRESSES: Submit written requests for single copies on a 3.5'' diskette of the guidance entitled ''Accidental Radioactive Contamination of Human Food and Animal Feeds: Recommendation for State and Local Agencies'' to the Division of Small Manufacturers Assistance, Center for Devices and Radiological Health (HFZ–220), Food and Drug Administration, 1350 Piccard Dr., Rockville, MD 20850. Send two self-addressed adhesive labels to assist that office in processing your request, or fax your request to 301–443–8818. Submit written comments on the guidance to the contact person listed below. See the **SUPPLEMENTARY INFORMATION** section for information on electronic access to the guidance.

FOR FURTHER INFORMATION CONTACT: Donald L. Thompson, Center for Devices and Radiological Health (HFZ–240), Food and Drug Administration, 1350 Piccard Dr., Rockville, MD 20850, 301–827–0012.

SUPPLEMENTARY INFORMATION:

I. Background

Recommendations on accidental radioactive contamination of human food and animal feeds were issued in 1982 by FDA. Since then, there have been enough significant advancements related to emergency planning to warrant updating the guidance document. New scientific information and radiation protection philosophy are incorporated, experience gained since 1982 is included, and guidance developed by international organizations is taken into account. In 1992, and again in 1994, drafts of the revised document were circulated for review by staff of the principal Federal agencies involved in radiological emergency response and by a committee of the Conference Radiation Control Program Directors. In the **Federal Register** of May 22, 1997 (62 FR 28055), FDA published a notice of availability of a draft guidance. Interested persons were given until August 20, 1997, to comment on the draft. Forty-two comments were received, principally from State and Federal agencies. Revision of the draft in response to comments did not involve any change in concepts, only clarifications, errata, and definitions.

The recommendations provide guidance to State and local agencies to aid in emergency response planning and execution of protective actions associated with production, processing, distribution, and use of human food and animal feeds accidentally contaminated with radionuclides. Limits, called Derived Intervention Levels, are set on the radionuclide activity concentration permitted in food, and protective actions for reducing the amount of contamination are discussed. The recommendations are applicable to accidents at nuclear power plants and many other types of accidents where a significant radiation dose could be received as a result of consumption of contaminated food. The recommendations do not authorize or apply to deliberate releases of radionuclides that could result in contamination, nor do they apply to situations of nonaccidental nature. These recommendations rescind and replace the 1982 recommendations.

II. Significance of Guidance

This guidance document represents the agency's current thinking on the Accidental Radioactive Contamination of Human Food and Animal Feeds: Recommendations for State and Local Agencies. It does not create or confer any rights for or on any person and does not operate to bind FDA or the public. An alternative approach may be used if such approach satisfies the applicable statute, regulations, or both.

The agency has adopted Good Guidance Practices (GGP's), which set forth the agency's policies and procedures for the development, issuance, and use of guidance documents (62 FR 8961, February 27, 1997). This guidance document is issued as a Level 1 guidance consistent with GGP's.

III. Electronic Access

In order to receive the guidance entitled ''Accidental Radioactive Contamination of Human Food and Animal Feeds: Recommendations for State and Local Agencies'' via your fax machine, call the CDRH Facts-On-Demand (FOD) system at 1–800–899–0381 or 301–827–0111 from a touch-tone telephone. At the first voice prompt press 1 to access DSMA Facts, at second voice prompt press 2, and then enter the document number (1071) followed by the pound sign (#). Then follow the remaining voice prompts to complete your request.

Persons interested in obtaining a copy of the guidance may also do so using the World Wide Web (WWW). The Center for Devices and Radiological Health (CDRH) maintains an entry on the WWW for easy access to information including text, graphics, and files that may be downloaded to a personal computer with access to the Web. Updated on a regular basis, the CDRH home page includes the guidance ''Accidental Radioactive Contamination of Human Food and Animal Feeds: Recommendations for State and Local Agencies,'' device safety alerts, **Federal Register** reprints, information on premarket submissions (including lists of approved applications and manufacturer's addresses), small manufacturers' assistance, information on video conferencing and electronic submissions, mammography matters, and other device-oriented information. The CDRH home page may be accessed at ''http://www.fda.gov/cdrh''.

A text-only version of the CDRH Web site is also available from a computer or VT–100 compatible terminal by dialing 1–800–222–0185 (terminal settings are 8/1/N). Once the modem answers, press Enter several times and then select menu choice 1: FDA BULLETIN BOARD SERVICE. From there follow instructions for logging in, and at the BBS TOPICS PAGE, arrow down to the FDA home page (do not select the first CDRH entry). Then select Medical Devices and Radiological Health. From there select CENTER FOR DEVICES AND RADIOLOGICAL HEALTH for

general information, or arrow down for specific topics.

IV. Comments

Interested persons may, at any time, submit to the contact person (named above) written comments regarding this guidance. Such comments will be considered when determining whether to amend the current guidance.

Dated: August 5, 1998.

D.B. Burlington,

Director, Center for Devices and Radiological Health.

[FR Doc. 98–21795 Filed 8–12–98; 8:45 am]

BILLING CODE 4160–01–F

DEPARTMENT OF HEALTH AND HUMAN SERVICES

Health Care Financing Administration

[Document Identifier: HCFA–R–251]

Emergency Clearance: Public Information Collection Requirements Submitted to the Office of Management and Budget (OMB)

AGENCY: Health Care Financing Administration, HHS.

In compliance with the requirement of section 3506(c)(2)(A) of the Paperwork Reduction Act of 1995, the Health Care Financing Administration (HCFA), Department of Health and Human Services, is publishing the following summary of proposed collections for public comment. Interested persons are invited to send comments regarding this burden estimate or any other aspect of this collection of information, including any of the following subjects: (1) The necessity and utility of the proposed information collection for the proper performance of the agency's functions; (2) the accuracy of the estimated burden; (3) ways to enhance the quality, utility, and clarity of the information to be collected; and (4) the use of automated collection techniques or other forms of information technology to minimize the information collection burden.

We are, however, requesting an emergency review of the information collection referenced below. In compliance with the requirement of section 3506(c)(2)(A) of the Paperwork Reduction Act of 1995, we have submitted to the Office of Management and Budget (OMB) the following requirements for emergency review. Due to an unanticipated event and the fact that this collection of this information is needed before the expiration of the normal time limits under OMB's regulations at 5 CFR, Part 1320, we are requesting an emergency review.

With the creation of the Medicare+Choice program, as required by the Balanced Budget Act of 1997 (P.L. 105–33), Medicare beneficiaries' health care options were expanded to include coordinated care plans such as Health Maintenance Organizations, Preferred Provider Organizations, Provider sponsored Organizations, as well as Private Fee for Service Plans and Medical Savings Accounts. While the new options bring more flexibility for health care decisions for people with Medicare, they also necessitate the need for a carefully planned, extensive education campaign to assure that Medicare Beneficiaries have understanding of how Medicare offers more health plan choices and how to use HCFA-developed information tools that will be available through an annual publication and the World Wide Web.

The purpose of this submission is to request approval of the Medicare & You bounce back survey form that will be used to collect information from Internet users accessing the Medicare & You, Medicare+Choice Handbook, on the Medicare.gov Web site. This web-based survey will provide critical feedback from our agents, partners, regional offices, congressional offices, and beneficiaries who use the Medicare & You, Medicare+Choice Handbook. The information will be used by HCFA to identify parts of Medicare & You that need to be revised to further enhance HCFA's, Medicare+Choice information strategies and related tools.

HCFA is requesting OMB review and approval of this collection within 6 working days of publication of this notice in the **Federal Register**, with a 180-day approval period. Written comments and recommendations will be accepted from the public if received by the individuals designated below by 5 working days of the publication of this notice. During this 180-day period, we will publish a separate **Federal Register** notice announcing the initiation of an extensive 60-day agency review and public comment period on these requirements. We will submit the requirements for OMB review and an extension of this emergency approval.

Type of Information Request: New Collection.

Title of Information Collection: Medicare & You Bounce Back Survey Form.

Form Number: HCFA–R–251 (OMB approval #: 0938–NEW).

Use: The primary purpose of the bounce back form is to provide HCFA feedback from users of the Medicare+Choice handbook. The information collected through the bounce back form will be used in conjunction with other information collected in the States piloting Medicare & You to make revisions for future publications of the Medicare & You, Medicare+Choice handbook.

Frequency: On occasion.

Affected Public: Individuals or Households, Businesses or other For-profit.

Number of Respondents: 9,855.

Total Annual Responses: 9,855.

Total Annual Hours Requested: 986.

To obtain copies of the supporting statement for the proposed paperwork collections referenced above, access HCFA's WEB SITE ADDRESS at http://www.hcfa.gov/regs/prdact95.htm, or E-mail your request, including your address and phone number, to Paperwork@hcfa.gov, or call the Reports Clearance Office on (410) 786–1326.

Interested persons are invited to send comments regarding the burden or any other aspect of these collections of information requirements. However, as noted above, comments on these information collection and recordkeeping requirements must be mailed and/or faxed to the designees referenced below within 5 working days of the publication of this notice in the **Federal Register**:

Health Care Financing Administration, Office of Information Services, Security and Standards Group, Division of HCFA Enterprise Standards, Room N2–14–20, 7500 Security Boulevard, Baltimore, MD 21244–1850. Fax Number: (410) 786–0262 Attn: John Rudolph HCFA–R–251 and, Office of Information and Regulatory Affairs, Office of Management and Budget, Room 10235, New Executive Office Building, Washington, DC 20503, Fax Number: (202) 395–6974 or (202) 395–5167 Attn: Allison Herron Eydt, HCFA Desk Officer.

Dated: August 6, 1998.

John P. Burke III,

HCFA Reports Clearance Officer, Office of Information Services, Security and Standards Group, Division of HCFA Enterprise Standards.

[FR Doc. 98–21773 Filed 8–12–98; 8:45 am]

BILLING CODE 4120–03–P

DEPARTMENT OF HEALTH AND HUMAN SERVICES

Health Resources and Services Administration

Agency Information Collection Activities: Proposed Collection: Comment Request

In compliance with the requirement for opportunity for public comment on proposed data collection projects [section 3506(c)(2)(A) of Title 44, United States Code, as amended by the Paperwork Reduction Act of 1995, Pub. L. 104–13], the Health Resources and Services Administration (HRSA) will publish periodic summaries of proposed projects developed for submission to OMB under the Paperwork Reduction Act of 1995. To request more information on the proposed project or to obtain a copy of the data collection plans and draft instruments, call the HRSA Reports Clearance Officer at (301) 443–1129.

Comments are invited on: (a) whether the proposed collection of information is necessary for the proper performance of the functions of the agency, including whether the information shall have practical utility; (b) the accuracy of the agency's estimate of the burden of the proposed collection of information; (c) ways to enhance the quality, utility, and clarity of the information to be collected; and (d) ways to minimize the burden of the collection of information on respondents, including through the use of automated collection techniques or other forms of information technology.

Proposed Project: Implementation of a Reporting Form to Grantees of the Emergency Medical Services for Children (EMSC) Program—New

The Maternal and Child Health Bureau of HRSA is planning to implement an annual reporting form required of grantees of the Emergency Medical Services for Children (EMSC) program. The purpose of the form is to provide systematic information and data on the activities conducted and the results obtained by EMSC program grantees to meet the overall program goal of reducing child and youth mortality and morbidity sustained as a result of severe illness or trauma. The proposed form will constitute a new reporting requirement for EMSC grantees.

Data from the form will provide quantitative information on the different aspects of the EMSC program, specifically: (a) demographic data/profile of populations served, (b) state EMSC infrastructure/system development, (c) local infrastructure/system development, and (d) training of EMS staff in pediatric protocols. This form will provide data useful to the states and will enable HRSA to provide data required by Congress under the Government Performance and Results Act of 1993.

The estimated burden on respondents is as follows:

Respondents	Number of respondents	Hours per respondent	Total hour burden
Grantees	50	2	100

Send comments to Susan Queen, Ph.D., HRSA Reports Clearance Officer, Room 14–33, Parklawn Building, 5600 Fishers Lane, Rockville, MD 20857. Written comments should be received within 60 days of this notice.

Dated: August 7, 1998.

Jane Harrison,

Director, Division of Policy Review and Coordination.

[FR Doc. 98–21722 Filed 8–12–98; 8:45 am]

BILLING CODE 4160–15–M

DEPARTMENT OF HEALTH AND HUMAN SERVICES

Office of Inspector General

Program Exclusions: July 1998

AGENCY: Office of Inspector General, HHS.

ACTION: Notice of program exclusions.

During the month of July 1998, the HHS Office of Inspector General imposed exclusions in the cases set forth below. When an exclusion is imposed, no program payment is made to anyone for any items or services (other than an emergency item or service not provided in a hospital emergency room) furnished, ordered or prescribed by an excluded party under the Medicare, Medicaid, and all Federal Health Care programs. In addition, no program payment is made to any business or facility, e.g., a hospital, that submits bills for payment for items or services provided by an excluded party. Program beneficiaries remain free to decide for themselves whether they will continue to use the services of an excluded party even though no program payments will be made for items and services provided by that excluded party. The exclusions have national effect and also apply to all Executive Branch procurement and non-procurement programs and activities.

Subject, city, state	Effective date
PROGRAM-RELATED CONVICTIONS	
APOIAN, OSCAR A ..... BLOOMFIELD HILLS, MI	08/20/1998
BASDEO, HARRI PERSAD ..... OAKDALE, LA	08/20/1998
BATES, PATRICIA J ..... BATTLE CREEK, MI	08/20/1998
BILBAENO, MODESTO DECASTRO JR ..... S SAN FRANSCISCO, CA	08/20/1998
BOLDEN, CARMEN ..... MUNCY, PA	08/20/1998
BONHAM, HENRY EDWARD EUGENE ..... SEAGOVILLE, TX	08/20/1998
BRODY, BRIAN CHARLES ..... LITTLETON, CO	08/20/1998
BRUCE, WILLIAM H ..... PHILADELPHIA, PA	08/20/1998
BULGER, BEVERLY LARAE ... BURLESON, TX	08/20/1998
BURGE, LISA MAE ..... ELLICOTT CITY, MD	08/20/1998
CENTRO AYUDA, INC ..... MUNCY, PA	08/20/1998
CHAPOTIN, CONCEPCION ..... MIAMI, FL	08/20/1998
CHOI, JOON Y ..... BLOOMFIELD HILLS, MI	08/20/1998
CLAIBORNE, CORDELIA ..... WICHITA, KS	08/20/1998
CLAYMAN, WAYNE R ..... GAHANNA, OH	08/20/1998
COFFEY, ROBERT BROOKS .. PLYMOUTH, MN	08/20/1998
DAVIDSON, THOMAS E ..... LEXINGTON, KY	08/20/1998
DAWSEY, MICHAEL ..... OREGON, WI	08/20/1998
DEELEY, NORMAN ..... NAPLES, FL	08/20/1998
DEHAMER, PAULINE ..... CLEARWATER, FL	08/20/1998
DOSWELL, RONALD J ..... BALTIMORE, MD	08/20/1998
FANG, MICHAEL SCOTT ..... HARRISBURG, PA	08/20/1998
FARIAS, MANUEL ..... LAGUNA NIGUEL, CA	08/20/1998
GASKIN, CATHY ELLEN ..... LANSING, MI	08/20/1998
GIEGER, TRACIE L ..... COLEMAN, FL	08/20/1998
GREENOUGH, HARRY W III ... ANCHORAGE, AK	08/20/1998
GUERRA, SANDRA ..... MIAMI, FL	08/20/1998
GUZMAN, GLADYS ..... MIAMI, FL	08/20/1998
HARRIS, JAMES LOUIS ..... PORTSMOUTH, VA	08/20/1998
HESTER, ANTHONY LYNN ..... OAKDALE, LA	08/20/1998
INTERIAN, EUGENIA GONZALEZ ..... MIAMI LAKES, FL	08/20/1998
JONES, CYNTHIA MOORE ..... PHOENIX, AZ	08/20/1998
JOSHI, JAYENDRA B ..... WHITE DEER, PA	08/20/1998
KELISEK, ROBERT F ..... CHADDS FORD, PA	08/20/1998
KIMBROUGH, RAYMOND JR ..	08/20/1998

Subject, city, state	Effective date
ORLANDO, FL	
LANE, DENISE WASHINGTON JESSUP, MD	08/20/1998
LOPEZ, DENISE MIAMI, FL	08/20/1998
MAHRAN, ADEL M NEW YORK, NY	08/20/1998
MATTHEWS, SUSAN S BLUFFTON, SC	08/20/1998
MILLER, WESLEY MORGANTOWN, WV	08/20/1998
MUSTAFA, MAHGOUB M WASHINGTON, DC	08/20/1998
OMEGA REIMBURSEMENT CONCEPTS PITTSBURGH, PA	08/20/1998
ORZAME & ORZAME MDS PLLC BENTON HARBOR, MI	08/20/1998
OSCAR ASSADOR APOIAN, DO, PC DEARBORN HGTS, MI	08/20/1998
PAGNOTTA, SUSAN C TUCSON, AZ	08/20/1998
PARIANI, HARISH KUMAR HUMBLE, TX	08/20/1998
PASTRANA, ERNESTO HIALEAH, FL	08/20/1998
PAYNE, KERMIT G EAST POINT, GA	08/20/1998
PETERSON, CARL ASHLAND, KY	08/20/1998
PURCELL, DONALD J II HONOLULU, HI	08/20/1998
PUTMAN, DEBRA L MONROE, LA	08/20/1998
REED, BEVERLY ANN LOS ANGELES, CA	08/20/1998
ROBERT F KELISEK, DDS, PC KENNETT SQUARE, PA	08/20/1998
ROSS, MELODY MARKS LOCUST GROVE, VA	08/20/1998
RUST, LORIN MILLER OLDSMAR, FL	08/20/1998
SANCHEZ, ALEJANDRA MIAMI, FL	08/20/1998
SCHULTZ, TANJA LYNN ELVERTA, CA	08/20/1998
SCRIBNER, LAURIE A LIVERMORE FALLS, ME	08/20/1998
SMITH, JUANITA H CAPITOL HGTS, WA	08/20/1998
STILTNER, ESTIL HONAKER, VA	08/20/1998
SWENSON, DAVID W OREM, UT	08/20/1998
URQUHART, DENNIS RAY CALAIS, ME	08/20/1998
VILLAGE CORPORATION S DARTMOUTH, MA	08/20/1998
WATSON, RENELLA A VILLE PLATTE, LA	08/20/1998
FELONY CONTROL SUBSTANCES CONVICTION	
LIGDA, DANIEL L BARNESBORO, PA	08/20/1998
MOYER, NANCY L HOPKINS, MN	08/20/1998
PATIENT ABUSE/NEGLECT CONVICTIONS	
ADERIBIGBE, VICTORIA O BELTSVILLE, MD	08/20/1998
ANDREWS, APRIL GRANTS, NM	08/20/1998
BEACHLEY, CARROLL LEO HAGERSTOWN, MD	08/20/1998
BOYD, CURTIS H NEWARK, DE	08/20/1998
BROWN, AMANDA WINNSBORO, LA	08/20/1998
BUITRAGO, CARLOS ALBERTO FOWLER, CA	08/20/1998
COOK, REGINA SWARTZ DETROIT, MI	08/20/1998
DENISON, ROBERTA VIVIAN, LA	08/20/1998
FOX, ANGELA LATOYA CALHOUN CITY, MS	08/20/1998
GODSEY, GALE FORT WORTH, TX	08/20/1998
GORDON, JOHNNY CLYDE TENNESSEE COLONY, TX	08/20/1998
GREEN, WILLIAM B MERIDIAN, MS	08/20/1998
GRILLO, ADERONKE BALTIMORE, MD	08/20/1998
GUADAGNOLI, JOSEPH ELDEN ALBUQUERQUE, NM	08/20/1998
GUTIERREZ, ARACELI GARCIA EL PASO, TX	08/20/1998
GUTIERREZ, MARTIN G PENA BLANCA, NM	08/20/1998
HAMPTON, JOSEPH BESSEMER, AL	08/20/1998
HUNTLEY, CHARLOTTE ANN DORSET, OH	08/20/1998
INGRAM, BRENDA ANN COFFEVILLE, MS	08/20/1998
JONES, FREDIA HEIDELBERG, MS	08/20/1998
KING, PATRICIA HOT SPRINGS, AR	08/20/1998
LEATHERS, NIKKI RULTON, MS	08/20/1998
LESTER, JOHN BUCKLES LANSING, KS	08/20/1998
LYNN, BILLY E CHATTANOOGA, TN	08/20/1998
MOORE, VICKIE R FOREST, MS	08/20/1998
NOLEN, JULIUS MARIE MONTICELLO, AR	08/20/1998
ORZAME, GABRIEL SAGUN BENTON HARBOR, MI	08/20/1998
PARKER, D SHENETHA BRUCE, MS	08/20/1998
PARRA, DANIEL C KANSAS CITY, KS	08/20/1998
ROSE, THOMAS JR LAKE PROVIDENCE, LA	08/20/1998
SATTERFIELD, DOROTHY DEKALB, TX	08/20/1998
SMITH, CHERYL L DETROIT, MI	08/20/1998
STANHOPE, MYRTLE BAKER, MT	08/20/1998
VINLUAN, OLIVER DALE S SAN FRANCISCO, CA	08/20/1998
WALKER, TANISHA LAVETTE CALHOUN CITY, MS	08/20/1998
WASHINGTON, SHELLY JEAN KILLEEN, TX	08/20/1998
WILBON, DIANE AUGUSTA AKRON, OH	08/20/1998
CONVICTION FOR HEALTH CARE FRAUD	
HANSEN, POLLY CARTER SALEM, VA	08/20/1998
MARTIN, ROSCOE B SACRAMENTO, CA	08/20/1998
PATILLO, MARY LEE DETROIT, MI	08/20/1998
PATILLO, INC DETROIT, MI	08/20/1998
WEISS, STEPHEN JOSEPH URBANDALE, IA	08/20/1998
CONTROLLED SUBSTANCE CONVICTIONS	
JONES, EULALIA MARIE DETROIT, MI	08/20/1998
KOEHLER, PAMELA RAE MCKINLEYVILLE, CA	08/20/1998
LICENSE REVOCATION/SUSPENSION/ SURRENDERED	
ABRAHAM, MARK C OAKS CORNERS, NY	08/20/1998
ADAN, ROBERTO WOODRIDGE, IL	08/20/1998
ALBAZZAZ, ALA J BLOOMINGDALE, IL	08/20/1998
ALWAY, PAUL R ALAMEDA, CA	08/20/1998
ASHLEY, BRUCE A DENAIR, CA	08/20/1998
AZLEIN, KIT GEOFFREY RENO, NV	08/20/1998
BAHOU, KAMIL EMIL HUNTINGTON BCH, CA	08/20/1998
BIRKMEYER, CHRISTOPHER M SAN DIEGO, CA	08/20/1998
BOONE, MICHAEL I BRENTWOOD, NH	08/20/1998
BRADY, JOANN M MINNEAPOLIS, MN	08/20/1998
CALDERON, CONNIE F MANKATO, MN	08/20/1998
CAMAYA, ARACELI ESPERANZA GALT, CA	08/20/1998
CAMPBELL, ANGELA P HIGH VIEW, WV	08/20/1998
CARLSON, TAMARA H ROCHESTER, MN	08/20/1998
CEFALU, VINCENT NICHOLAS HAMMOND, LA	08/20/1998
CHAMBERS, BRYAN PATRICK VOORHEES, NJ	08/20/1998
CHRISTEN, SAMUEL E RANCHO MIRAGE, CA	08/20/1998
CHUNG, ESTHER AN NORWALK, CA	08/20/1998
COLLETT, NANCY B MONTPELIER, VT	08/20/1998
COOL, JAMES H JR PIKEVILLE, KY	08/20/1998
CORRALES, ENRIQUE G MODESTO, CA	08/20/1998
COVILLE, FREDERICK A	08/20/1998

Subject, city, state	Effective date
OCEAN CITY, NJ	
CUSTODIO, JOSEPH M ..... VERO BEACH, FL	08/20/1998
DAVIS, SHARON K ..... ANOKA, MN	08/20/1998
DESPORT, JANE CAMERON .. GREENSBURG, PA	08/20/1998
DEWBERRY, ROBERT W ..... LOS ANGELES, CA	08/20/1998
DICKENS, MARY F ..... INVER GROVE HGTS, MN	08/20/1998
DOBINE, ALICE EMMA ..... LA QUINTA, CA	08/20/1998
DONAHOO, DIANNE MARIE ... SIOUX CITY, IA	08/20/1998
DOOSEY, EZEKIEL O ..... ALEXANDRIA, VA	08/20/1998
DOUGLASS, CASSANDRA SUE ..... IONE, CA	08/20/1998
DOWLING, BEVERLY ..... NEW ZEALAND,	08/20/1998
EDIIN-STANLEY, LINDA ..... JULIAN, CA	08/20/1998
ELLIS, ROBERTA E ..... MORA, MN	08/20/1998
FISHER, JAXIE STEWART ..... VIRGINIA BEACH, VA	08/20/1998
FITZRANDOLPH, KENNETH DAVID ..... RICHMOND, VA	08/20/1998
FORGEY, BURNELL GORDON COSTA MESA, CA	08/20/1998
FOSTER, PATRICIA L ..... WOODLAND, CA	08/20/1998
FRASER, CYNTHIA K ..... ANOKA, MN	08/20/1998
FRENCH, DEBORAH LYNNE .. HENDERSON, NV	08/20/1998
FURMAN, KATHRYN E ..... MANCHESTER, NH	08/20/1998
GIBBONS, PATRICK W ..... ROCHESTER, MN	08/20/1998
GLOVER, MARION ETHEL ..... GRIZZLY FLATS, CA	08/20/1998
GOODWIN, SANDRA LOUISE SANTA ROSA, CA	08/20/1998
GUSTAVSON, KARLA K ..... NEW ULM, MN	08/20/1998
HALBRUNER, ROBERT ..... PHILADELPHIA, PA	08/20/1998
HARDING, KATHLEEN M ..... BLOOMINGTON, MN	08/20/1998
HARRIS, VERNON JR ..... BALTIMORE, MD	08/20/1998
HARTZ, HELEN RIOLA ..... PHILADELPHIA, PA	08/20/1998
HINSON-WOLF, SHARI ..... BEDFORD, PA	08/20/1998
HOFFER, LEE WARREN ..... CORAL SPRINGS, FL	08/20/1998
HOLLIDAY, DEBBIE LYNN ..... SUFFOLK, VA	08/20/1998
HORNER, VALERIE MAE ..... BROOKLYN, MN	08/20/1998
HOWARD, VIRGINIA M ..... SAINT PAUL, MN	08/20/1998
HOWELL, SARAH J ..... MINNEAPOLIS, MN	08/20/1998
JARVIS, DARLENE M ..... CLAREMONT, NH	08/20/1998
JENNINGS, WILLIE LEE JR .... PARK FOREST, IL	08/20/1998
JENSON, DIANE ..... DECATUR, IL	08/20/1998
JOHNSON, PATRICIA M ..... MANCHESTER, NH	08/20/1998
JOSEF, AVELINO S ..... LONG BEACH, CA	08/20/1998
KITTS, BECKY D ..... FALMOUTH, VA	08/20/1998
KRUGER, CHAD G ..... LAS VEGAS, NV	08/20/1998
LACOURSE, JOHN ..... TILTON, NH	08/20/1998
LAPRELL, RENEE M ..... RUMFORD, ME	08/20/1998
LARSON, NORMA J ..... PINE RIVER, MN	08/20/1998
LASSA, RALPH EDWARD ..... SANTA ROSA, CA	08/20/1998
LAUGHLIN, DEBORAH W ..... VIRGINIA BEACH, VA	08/20/1998
LAWYER, BRIDGETT PITTARD ..... CHESAPEAKE, VA	08/20/1998
LEANDRO, DANNA MICHELLE BETHEL ISLAND, CA	08/20/1998
LEEMON, STANTON ..... LAGUNA BEACH, CA	08/20/1998
LENOX, FLORENCE B ..... ROCKFORD, IL	08/20/1998
LESTER, ANDREW TODD ..... FULTON, MD	08/20/1998
LEWIS, DUGALD T ..... AMHERST, NY	08/20/1998
LICHAU, KRISTIN LENORE .... SANTA ROSA, CA	08/20/1998
LILLIE, HOMER J ..... FREMONT, CA	08/20/1998
LIM, RANULFO Y ..... DALY CITY, CA	08/20/1998
LONG, MARGUERITE R ..... EL CAJON, CA	08/20/1998
LOOMAN, MARY M ..... ST PAUL, MN	08/20/1998
MABATID, HEIDI FLORES ..... CONVERSE, TX	08/20/1998
MACNAY, DONALD L ..... MANASSAS, VA	08/20/1998
MCCOLLOUGH, JOHN S ..... SYLVA, NC	08/20/1998
MEADOR, GLENDA OVERSTREET ..... BEDFORD, VA	08/20/1998
MITCHELL, CATHERINE L ..... BATH, ME	08/20/1998
MONTGOMERY, SUSAN KIDD BARREN SPRINGS, VA	08/20/1998
MYERS, GREGORY G JR ..... BIRDSBORO, PA	08/20/1998
OGLE, JAMES RONALD ..... GATLINBURG, TN	08/20/1998
PARK, JANGWON ..... GARDEN GROVE, CA	08/20/1998
PHILLIPS, ANGELA OAKLEY .. ROXBORO, NC	08/20/1998
PHILLIPS, TRACY L ..... MOULTONBORO, NH	08/20/1998
PHILLIPS, TONI LENORE ..... W HOLLYWOOD, CA	08/20/1998
ROTH, MICHAEL JOEL ..... PACIFIC PALISADES, CA	08/20/1998
ROTHROCK, PERRY CLYDE III ..... BLYTHEVILLE, AR	08/20/1998
SCHAUB, JOHN STEPHEN ..... PORTLAND, OR	08/20/1998
SEEBECK, CATHERINE PASETSKY ..... RICHMOND, VA	08/20/1998
SHEPHERD, RUSSELL ..... GALLATIN, TN	08/20/1998
SNYDER, LAWRENCE K ..... BERKELEY, CA	08/20/1998
STANFIELD-NIELSON, LOUISE D ..... LONG BEACH, CA	08/20/1998
SU, NINA N ..... LA JOLLA, CA	08/20/1998
TANI, NICOLE LIZAVETA ..... NEW YORK, NY	08/20/1998
TOLLIVER, JOHN D ..... FAIRFAX STATION, VA	08/20/1998
VANDERSTUYF, JAMES GENE ..... HUNTINGTON BEACH, CA	08/20/1998
WHITE, COURTNEY W ..... SAN DIEGO, CA	08/20/1998
WHITE, MARVIN ..... WALNUT, CA	08/20/1998
WILKINSON, CYNTHIA ..... NEW BEDFORD, MA	08/20/1998
FEDERAL/STATE EXCLUSION/SUSPENSION	
CORNER DRUG, INC ..... BONNERS FERRY, ID	08/20/1998
FINNEGAN'S PLAZA PHARMACY ..... N BRUNSWICK, NJ	08/20/1998
GRAY, MICHAEL ..... NEW YORK, NY	08/20/1998
SAEED, MOHAMMED ..... N BRUNSWICK, NJ	08/20/1998
SANGEAP, CORNELIA ..... REGO PARK, NY	08/20/1998
QUALITY OF CARE VIOLATIONS	
A GENTLE DENTAL HOMECARE GROUP ..... BEDFORD, OH	06/03/1998
PIETRACK, THOMAS J ..... WESTLAKE, OH	06/03/1998
ROSENBERG, DAVID A ..... SOLON, OH	06/03/1998
ROSENBERG/PIETRACK & ASSOC ..... BEDFORD, OH	06/03/1998
FRAUD/KICKBACKS	
BAER, MARC S ..... VERNON, CT	07/16/1998
MEITUS, VICKI L ..... PHILADELPHIA, PA	05/12/1998
PROCARE MEDICAL SUPPLIERS, INC ..... LAKE FOREST, IL	10/31/1997
SKLAROV, VLADIMIR ..... LAKE FOREST, PA	10/31/1997
SUMMERS, SANFORD ..... UNIONTOWN, OH	02/11/1998
OWNED/CONTROLLED BY CONVICTED/EXCLUDED	
EXPO MED MEDICAL EQUIPMENT	08/20/1998

Subject, city, state	Effective date
MIAMI, FL	
FLORIDA MEDICAL JOURNAL CORP SEMINOLE, FL	08/20/1998
GARY P SAZAMA PHD, PC & ASSOC LOGAN, UT	08/20/1998
MOBILSONIX SERVICES, INC ZEPHYRHILLS, FL	08/20/1998
NORTHLAND DENTAL, INC ANCHORAGE, AK	08/20/1998
PARK MANAGEMENT & REALTY, INC ZEPHYRHILLS, FL	08/20/1998
SPEED RENTAL MEDICAL, INC MIAMI, FL	08/20/1998
DEFAULT ON HEAL LOAN	
ARCEFORESTIER, NESTOR CARMUY, PR	08/20/1998
BRATTON, BOBBY JOE OWASSO, OK	08/20/1998
BURBANK, JOHN MARK LADY LAKE, FL	08/20/1998
BUTLER, KEVIN J ASTORIA, IL	08/20/1998
CALANDROS, GEORGE J HUNTINGTON, WV	08/20/1998
CHIAMBAS, ALEXANDER C MT PROSPECT, IL	08/20/1998
CHIODO, DANIEL J MARIETTA, GA	08/20/1998
CLARK, MARK D WALLA WALLA, WA	08/20/1998
DAVIS, MARY L YPSILANTI, MI	08/20/1998
DOUNIES, THERESE M PALOS VERDES ESTATES, CA	08/20/1998
DUONG, LINH H LANCASTER, PA	08/20/1998
ELLIS, DUNK A III MOSS POINT, MS	08/20/1998
ENSIGN, LORIE A SAN CLEMENTE, CA	08/20/1998
EVANS, CHARLES MICHAEL BECKLEY, WV	08/20/1998
FEASTER, SAMUEL J ST LOUIS PARK, MN	08/20/1998
FERREIRA, TINO J SAN DIEGO, CA	08/20/1998
GERMAN, CARL SAN JOSE, CA	08/20/1998
GREEN, DAISY L SANTA BARBARA, CA	08/20/1998
HALLIDAY, JAMES W JR SALEM, OR	08/20/1998
HARRIS, CARL M HARVEY, IL	08/20/1998
HEINEN, JOSEPH E COLUMBIA, SC	08/20/1998
KATALINICH, GERY B MYRTLE BEACH, SC	08/20/1998
LASTER, YOLANDA ROCHELLE NASHVILLE, TN	08/20/1998
LEE, SHERMAN T S PASADENA, CA	08/20/1998
NAPPI, NEIL A W PALM BEACH, FL	08/20/1998
PALMER, RICHARD M NEWBURY PARK, CA	08/20/1998
PEARSON, ANDROMEDA T CHICAGO, IL	08/20/1998
RIBERA, ALFRED R MIAMI, FL	08/20/1998
RUTZ, FREDRICK D ATASCADERO, CA	08/20/1998
SASS, MICHAEL D REGO PARK, NY	08/20/1998
SCHULZE, RANDALL MARTIN SAN ANTONIO, TX	08/20/1998
SCOTT, JOHN ELIJAH MODESTO, CA	08/20/1998
SELKO, ROBERT L NOVATO, CA	08/20/1998
SHUNKWILER, KIM R DEARBORN HGTS, MI	08/20/1998
SPECTOR, MARK B CINCINNATI, OH	08/20/1998
TRICE, SANDRA V NASHVILLE, TN	08/20/1998
VANDERPOOL, KEITH B WASHINGTON, DC	08/20/1998
WHITE, JEANNINE L SOLANA BEACH, CA	08/20/1998

Dated: August 5, 1998.

Joanne Lanahan,

Director, Health Care Administrative Sanctions, Office of Inspector General.

[FR Doc. 98–21775 Filed 8–12–98; 8:45 am]

BILLING CODE 4150–04–P

DEPARTMENT OF HEALTH AND HUMAN SERVICES

National Institutes of Health

Government-Owned Inventions; Availability for Licensing

AGENCY: National Institutes of Health, Public Health Service, DHHS.

ACTION: Notice.

SUMMARY: The inventions listed below are owned by agencies of the U.S. Government and are available for licensing in the U.S. in accordance with 35 U.S.C. 207 to achieve expeditious commercialization of results of federally-funded research and development. Foreign patent applications are filed on selected inventions to extend market coverage for companies and may be available for licensing.

ADDRESSES: Licensing information and copies of the U.S. patent applications listed below may be obtained by writing to the indicated licensing contact at the Office of Technology Transfer, National Institutes of Health, 6011 Executive Boulevard, Suite 325, Rockville, Maryland 20852–3804; telephone: 301/496–7057; fax: 301/402–0220. A signed Confidential Disclosure Agreement will be required to receive copies of the patent applications.

Methods and Compositions for DRM, A Protein with Cell Cycle Regulating Activity

DG Blair, PA Clausen, LZ Topol, M Marx, G Calothy.

Serial No. 60/079,440 filed 26 Mar 98.

Licensing Contact: Joseph Hemby, 301/496–7735 ext. 265.

A novel gene, DRM, has been identified whose regulation and function are linked to the cell cycle and whose over expression as a fusion with Green Flourescent Protein (GFP) induces cell arrest at the G1/S cell cycle boundary. The expression of DRM is down regulated rapidly in transformed cells, but is highly expressed in certain normal, highly-differentiated cells of the brain, lung and colon. This novel gene may hold promise as (1) a new, early marker for cells about to transform, (2) a means for targeted cancer therapy, (3) a protective agent during chemotherapy, and (4) as a tool for *in vitro* or *in vivo* cell assays. The stabilized fluorescence of the fusion protein of DRM with GFP may be used in diagnostic assays or for basic research.

Tumor Tissue Microarrays For Rapid Molecular Profiling.

J Kononen (NHGRI), SB Leighton (NCRR), O Kallioniemi (NHGRI).

Serial No. 60/075,979 filed 25 Feb 98.

Licensing Contact: John Fahner-Vihtelic, 301/496–7735 ext. 270.

The present application describes a laboratory instrument which procures tiny (< 1 mm) core samples of biological tissue from characteristic regions of interest in paraffin embedded biological tissue blocks. The core samples are placed in a regular array in a new paraffin block creating a tissue array of thousands of selected samples for analysis. This new array block may now be sectioned, creating up to 200 nearly identical slides each containing tiny discs of the original specimens. These slides can be used as starting material for molecular screening, such as for DNA and RNA in situ hybridization as well as immunohistological staining. With this new invention, investigators are provided with a way to construct a tissue array consisting of a much higher number of tissue specimens than previously possible. Also, this new device automates the process of creating arrays and eliminates tedious hand operations while avoiding the prior art problem of extensive damage to the donor blocks. Feasibility of this method and apparatus has been proven and an automated version of the original system is in development. This research has

been published in Nature Medicine 1998 Jul 4(7): 844–847.

Inhibition of Ige-Mediated Allergies By A Human Ige-Derived Oligopeptide

EA Padlan, et al. (NIDDK).

DHHS Reference No. E–233–95/1; PCT/US97/22348 filed 05 Dec 97.

Licensing Contact: Stephen Finley, 301/496–7735 ext. 215.

It is estimated that 40 million people have some form of allergy and 14.9 million people have asthma in the United States. This technology identifies a specific amino acid sequence of the IgE molecule that when conformationally constrained inhibits the release of histamine and resulting inflammatory symptoms associated with hay fever and asthma, typical in people suffering from Type I hypersensitivity. This type of response occurs when an allergen triggers B cells to produce allergen-specific IgE antibodies. When binding to receptors on mast cells, these antibodies trigger the release of histamine and the resulting inflammatory symptoms. However when the IgE molecule is conformationally constrained by the addition of a cys residue at the amino acid terminal end and three amino acids at the carboxyl terminal end, the immune response is inhibited. The invention has applications for both of these high prevalence chronic diseases and could possibly be utilized as a vaccine for treatment of these problems.

Method of Treating Cancer Using C–26-Modified Epibryostatin

P Blumbert, Z Szallasi, GR Pettit (NCI).

Serial No. 60/013,740 filed 20 Mar 96; PCT/US97/04515 filed 30 Mar 97.

Licensing Contact: Girish Barua, 301/496–7735 ext. 263.

The invention relates to the use of 26-epibryostatin 1 and related compounds as cancer therapeutics. The compound is related to bryostatin 1 which has shown promise against melanoma but which has significant toxicity. The inventors have discovered that the antineoplastic activity of the bryostatins in a melanoma model system is not mediated by activation of protein kinase C (PKC) as previously believed. This has led to the discovery of antineoplastic activity in the lead compound, which with its reduced binding affinity for PKC would not have been expected to show such activity. The combination of antineoplastic activity with reduced affinity for PKC, which would be expected to translate into reduced toxicity compared to bryostatin 1, could lead to a significant clinical advantage of 26-epibryostatin-1 and analogues over bryostatin 1.

Dated: July 31, 1998.

Jack Spiegel,

Director, Division of Technology Development and Transfer Office of Technology Transfer.

[FR Doc. 98–21649 Filed 8–12–98; 8:45 am]

BILLING CODE 4140–01–M

DEPARTMENT OF HEALTH AND HUMAN SERVICES

National Institutes of Health

National Institute of Mental Health; Notice of Closed Meeting

Pursuant to section 10(d) of the Federal Advisory Committee Act, as amended (5 U.S.C. Appendix 2), notice is hereby given of the following meeting.

The meeting will be closed to the public in accordance with the provisions set forth in sections 552b(c)(4) and 552b(c)(6), Title 5 U.S.C., as amended. The grant applications and the discussions could disclose confidential trade secrets or commercial property such as patentable material, and personal information concerning individuals associated with the grant applications, the disclosure of which would constitute a clearly unwarranted invasion of personal privacy.

Name of Committee: National Institute of Mental Health Special Emphasis Panel.

Date: August 11, 1998.

Time: 1:00 p.m. to 2:30 p.m.

Agenda: To review and evaluate grant applications.

Place: Parklawn Building—Room 9C–26, 5600 Fishers Lane, Rockville, MD 20857, (Telephone Conference Call).

Contact Person: Mary Sue Krause, Scientific Review Administrator, Division of Extramural Activities, National Institute of Mental Health, NIH, Parklawn Building, 5600 Fishers Lane, Room 9C–26, Rockville, MD 20857, 301–443–6470.

This notice is being published less than 15 days prior to the meeting due to the timing limitations imposed by the review and funding cycle.

(Catalogue of Federal Domestic Assistance Program Nos. 93.242, Mental Health Research Grants; 93.281, Scientific Development Award, Scientist Development Award of Clinicians, and Research Scientist Award; 93.282, Mental Health National Research Service Awards for Research Training, National Institutes of Health, HHS)

Dated: August 7, 1998.

LaVerne Y. Stringfield,

Committee Management Officer, NIH.

[FR Doc. 98–21647 Filed 8–12–98; 8:45 am]

BILLING CODE 4140–01–M

DEPARTMENT OF HEALTH AND HUMAN SERVICES

National Institutes of Health

National Institute of Mental Health; Notice of Closed Meetings

Pursuant to section 10(d) of the Federal Advisory Committee Act, as amended (5 U.S.C. Appendix 2), notice is hereby given of the following meetings.

The meetings will be closed to the public in accordance with the provisions set forth in sections 552b(c)(4) and 552b(c)(6), Title 5 U.S.C., as amended. The contract proposals and the discussions could disclose confidential trade secrets or commercial property such as patentable material, and personal information concerning individuals associated with the contract proposals, the disclosure of which would constitute a clearly unwarranted invasion of personal privacy.

Name of Committee: National Institute of Mental Health Special Emphasis Panel.

Date: August 19, 1998.

Time: 9:00 AM to 5:00 PM.

Agenda: To review and evaluate contract proposals.

Place: Hyatt Regency Bethesda, One Bethesda Metro Center, Bethesda, MD 20814.

Contact Person: Ron Schoenfeld, PHD, Scientific Review Administrator, Division of Extramural Activities, National Institute of Mental Health, NIH, Parklawn Building, 5600 Fishers Lane, Room 9–101, Rockville, MD 20857, 301–443–3936.

This notice is being published less than 15 days prior to the meeting due to the timing limitations imposed by the review and funding cycle.

Name of Committee: National Institute of Mental Health Special Emphasis Panel.

Date: August 21, 1998.

Time: 9:00 AM to 5:00 PM.

Agenda: To review and evaluate contract proposals.

Place: Hyatt Regency Bethesda, One Bethesda Metro Center, Bethesda, MD 20814.

Contact Person: Ron Schoenfeld, PHD, Scientific Review Administrator, Division of Extramural Activities, National Institute of Mental Health, NIH, Parklawn Building, 5600 Fishers Lane, Room 9–101, Rockville, MD 20857, 301–443–3936.

This notice is being published less than 15 days prior to the meeting due to the timing limitations imposed by the review and funding cycle.

Name of Committee: National Institute of Mental Health Special Emphasis Panel.

Date: August 25, 1998.

Time: 10:00 AM to 3:00 PM.

Agenda: To review and evaluate contract proposals.

Place: Ritz-Carlton Hotel at Pentagon City, 1250 South Hayes Street, Arlington, VA 22202.

Contact Person: Susan M Matthews, Scientific Review Administrator, Division of Extramural Activities, National Institute of

Mental Health, NIH, Parklawn Building, 5600 Fishers Lane, Room 9–101, Rockville, MD 20857, 301–443–5047.

This notice is being published less than 15 days prior to the meeting due to the timing limitations imposed by the review and funding cycle.

Name of Committee: National Institute of Mental Health Special Emphasis Panel.

Date: September 2, 1998.

Time: 9:00 AM to 5:00 PM.

Agenda: To review and evaluate contract proposals.

Place: Hyatt Regency Bethesda, One Bethesda Metro Center, Bethesda, MD 20814.

Contact Person: Ron Schoenfeld, PHD, Scientific Review Administrator, Division of Extramural Activities, National Institute of Mental Health, NIH, Parklawn Building, 5600 Fishers Lane, Room 9–101, Rockville, MD 20857, 301–443–3936.

(Catalogue of Federal Domestic Assistance Program Nos. 93.242, Mental Health Research Grants; 93.281, Scientist Development Award, Scientist Development Award for Clinicians, and Research Scientist Award; 93.282, Mental Health National Research Service Awards for Research Training, National Institutes of Health, HHS)

Dated: August 7, 1998.

LaVerne Y. Stringfield,

Committee Management Officer, NIH.

[FR Doc. 98–21648 Filed 8–12–98; 8:45 am]

BILLING CODE 4140–01–M

DEPARTMENT OF HEALTH AND HUMAN SERVICES

National Institutes of Health

National Institute of Nursing Research; Notice of Meeting

Pursuant to section 10(d) of the Federal Advisory Committee Act, as amended (5 U.S.C. Appendix 2), notice is hereby given of a meeting of the National Advisory Council for Nursing Research.

The meeting will be open to the public as indicated below, with attendance limited to space available. Individuals who plan to attend and need special assistance, such as sign language interpretation or other reasonable accomodations, should notify the Contact Person listed below in advance of the meeting.

The meeting will be closed to the public in accordance with the provisions set forth in sections 552b(c)(4) and 552b(c)(6), Title 5 U.S.C., as amended. The grant applications and/or contract proposals and the discussions could disclose confidential trade secrets or commercial property such as patentable material, and personal information concerning individuals associated with the grant applications and/or contract proposals, the disclosure of which would constitute a clearly unwarranted invasion of personal privacy.

Name of Committee: National Advisory Council for Nursing Research.

Date: September 17, 1998.

Open: 10:00 AM to 12:00 PM.

Agenda: For discussion of program policies and issues.

Place: William H. Natcher Building, 45 Center Drive, Conference Room D, Bethesda, MD 20892.

Closed: 12:00 PM to 2:00 PM.

Agenda: To review and evaluate grant applications.

Place: William H. Natcher Building, 45 Center Drive, Conference Room D, Bethesda, MD 20892.

Contact Person: Mary Leveck, PHD, Acting Director, Division of Extramural Programs, NINR, NIH, Building 45, Room 3AN–12, Bethesda, MD 20892, (301) 594–5963.

(Catalogue of Federal Domestic Assistance Program Nos. 93.361, Nursing Research, National Institutes of Health, HHS)

Dated: July 29, 1998.

LaVerne Y. Stringfield,

Committee Management Officer, NIH.

[FR Doc. 98–21664 Filed 8–12–98; 8:45 am]

BILLING CODE 4140–01–M

DEPARTMENT OF HEALTH AND HUMAN SERVICES

Substance Abuse and Mental Health Services Administration

Notice of Meetings

Pursuant to Public Law 92–463, notice is hereby given of the meetings of the Substance Abuse and Mental Health Services Administration (SAMHSA) National Advisory Council and Center for Substance Abuse Prevention (CSAP)Drug Testing Advisory Board in September 1998.

The SAMHSA National Advisory Council meeting will include a presentation and discussion of information about the Agency's procurement plans. Therefore, a portion of the meeting will be closed to the public as determined by the Administrator, SAMHSA, in accordance with Title 5 U.S.C. 552b(c)(3) and 5 U.S.C. App. 2, section 10(d).

In addition, a portion of the meeting will be open and will include discussions related to SAMHSA activities in the area of alcohol; follow up to the May 5 SAMHSA National Advisory Council Meeting; an update on the Council's workgroup activties; and a discussion of other SAMHSA program and policy issues. There will also be a discussion of the minutes of the May 4, 1998 meeting of the Agency's five national advisory committees (SAMHSA National Advisory Council, Center for Substance Abuse Prevention National Advisory Council, Center for Substance Abuse Treatment National Advisory Council, and Center for Mental Health Services National Advisory Council, and the Advisory Committee for Women's Services).

Attendance by the public will be limited to space available. Public comments are welcome during the open session. Please communicate with the individual listed as contact below to make arrangements to comment or to request special accommodations for persons with disabilities.

A summary of the meeting and a roster of Council members may be obtained from: Ms. Janet Newsome, Secretary, SAMHSA National Advisory Council, 5600 Fishers Lane, Room 17–89, Rockville, Maryland 20857. Telephone: (301) 443–4266.

Substantive program information may be obtained from the contact whose name and telephone number is listed below.

Committee Name: SAMHSA National Advisory Council.

Meeting Date: September 11, 1998.

Place: Diplomat Room, Omni Shoreham Hotel, 2500 Calvert Street, N.W., Washington, D.C. 20008.

Closed: September 11, 1998, 8:30 a.m. to 9:15 a.m.

Open: September 11, 1998, 9:30 a.m. to 4:15 p.m.

Contact: Toian Vaughn, Executive Secretary, Parklawn, Building, Room 17–89 Telephone: (301) 443–4266; FAX: (301) 443–1587 and E-mail: TVaughn@samhsa.gov.

The Center for Substance Abuse Prevention Drug Testing Advisory Board (DTAB) will meet and the first day (September 9) of the meeting will be open and will include a roll call, general announcements, and a discussion of various program, procedural, and technical issues. The preliminary agenda for the open session includes, but is not limited to, the following topics: HHS update, DOT update, NRC update, and a discussion of the information submitted by industry representatives regarding the proposed draft guidelines for alternative drug testing specimens and technologies.

Public comments are welcome during the open session. If anyone needs special accommodations for persons with disabilities please notify the Contact listed below.

The second day (September 10) of the DTAB meeting involves the review of sensitive National Laboratory Certification Program (NLCP) internal operating procedures and program development issues. Therefore, the second day of the meeting will be closed to the public as determined by the Administrator, SAMHSA, in accordance

with 5 U.S.C. 552b(c) (2), (4), and (6) and 5 U.S.C. App. 2, § 10(d).

An agenda for this meeting and a roster of board members may be obtained from: Ms. Giselle Hersh, Division of Workplace Programs, 5600 Fishers Lane, Rockwall II, Suite 815, Rockville, MD 20857, Telephone: (301) 443–6014.

Substantive program information may be obtained from the contact whose name and telephone number is listed below.

Committee Name: Drug Testing Advisory Board.

Meeting Date: September 9–10, 1998.

Place: Gaithersburg Hilton, 620 Perry Parkway, Gaithersburg, Maryland 20877.

Open: September 9, 1998, 8:30 a.m.–4:00 p.m.

Closed: September 10, 1998, 8:30 a.m.–4:00 p.m.

Contact: Donna M. Bush, Ph.D., Executive Secretary, Telephone: (301) 443–6014 and FAX: (301) 443–3031.

Dated: August 7, 1998.

Jeri Lipov,

Committee Management Officer, Substance Abuse and Mental Health Services Administration.

[FR Doc. 98–21670 Filed 8–12–98; 8:45 am]

BILLING CODE 4162–20–P

DEPARTMENT OF HEALTH AND HUMAN SERVICES

Substance Abuse and Mental Health Services Administration

Center for Substance Abuse Prevention; Notice of Meeting

Pursuant to Public Law 92–463, notice is hereby given of the teleconference meeting of the Center for Substance Abuse Prevention (CSAP) National Advisory Council in August 1998.

The agenda will include the review, discussion and evaluation of individual contract proposals and discussion of information about the Center's procurement plans. Therefore, this teleconference meeting will be closed to the public as determined by the Administrator, SAMHSA, in accordance with Title 5, U.S.C. 552b(c) (3), (4) and (6) and 5 U.S.C. App. 2, Section 10(d).

Substantive program information may be obtained from the contact listed below.

Committee Name: Center for Substance Abuse Prevention, National Advisory Council.

Meeting Date: August 24, 1998.

Place: Center for Substance Abuse Prevention, 5515 Security Lane, 9th Floor, Rockwall II Bldg., Rockville, MD.

Closed: August 24, 1998, 1:00 p.m. to 3:00 p.m.

Contact: Yuth Nimit, Ph.D., Rockwall II Building, Suite 910, Telephone: (301) 443–8455.

This notice is being published less than 15 days prior to the meeting due to the urgent need to meet timing limitations imposed by the review and funding cycle.

Dated: August 7, 1998.

Jeri Lipov,

Committee Management Officer, Substance Abuse and Mental Health Services Administration.

[FR Doc. 98–21669 Filed 8–12–98; 8:45 am]

BILLING CODE 4162–20–P

DEPARTMENT OF THE INTERIOR

National Recreation Lakes Study Commission; Notice of Meeting

AGENCY: National Recreation Lakes Study Commission, Interior.

ACTION: Notice of Second Meeting of the National Recreation Lakes Study Commission.

SUMMARY: The Omnibus Parks and Public Land Management Act of 1996 authorizes a presidential commission to review the demand for recreation at Federal lakes, and to develop alternatives for enhanced recreation uses, primarily through innovative public/private partnerships. This will be the second meeting of the Commission.

DATES: September 9–10, 1998, starting at 8:00 a.m. on September 9 and starting at 1:00 p.m. on September 10.

ADDRESSES: The meeting will be held at the Lake Mead Resort, 322 Lakeshore Road, Boulder City, Nevada. The Commission will address old business and hear presentations concerning: Overview—Federal Lake Recreation; Federal Agency Presentations on Lake Recreation Programs; Workshop Strategy and Report; Roper-Starch Survey Report; Presentation of Commission Staff Research Findings Reports; Commission Business and Decisions.

The Commission will invite comments from the public beginning at 2:00 p.m. on September 9.

FOR FURTHER INFORMATION CONTACT: Jeanne Whittington, 202–219–7104.

Dated: August 7, 1998.

James R. Gasser,

Group Federal Officer, National Recreation Lakes Study Commission.

[FR Doc. 98–21646 Filed 8–12–98; 8:45 am]

BILLING CODE 4310–94–P

DEPARTMENT OF THE INTERIOR

Fish and Wildlife Service

Sport Fishing and Boating Partnership Council; Comment Request

AGENCY: Fish and Wildlife Service, Interior.

ACTION: Notice of open comment period.

SUMMARY: As provided in Section 10(a)(3) of the Federal Advisory Committee Act, the Service announces availability of a draft National Outreach and Communications strategic plan for public comment, prepared by the Federal Advisory Committee, the Sport Fishing and Boating Partnership Council (Council). Interested persons may provide written or electronic comment on the draft strategy.

DATES: August 13, 1998, through August 27, 1998.

ADDRESSES: To receive comments from recreational fishing and boating constituents, the Sport Fishing and Boating Partnership Council will post the draft National Outreach and Communications Plan on the Internet at web site http://www.fws.gov/r9sfbpc. The document will be available for review and comment from August 13 to August 27, 1998. A hard copy of the document is also available for review at the Sport Fishing and Boating Partnership Council Coordinator Office located at 1033 North Fairfax Street, Suite 200, Alexandria, Virginia 22314. A copy of the document can be obtained by mail from the Council Coordinator Office by calling (703) 836–1392. The deadline for written or electronic comment is August 27, 1998. Written comments should be returned by mail or hand carried to the Council Coordinator office at the above address. Comments will be considered for inclusion into the document and discussed by the Sport Fishing and Boating Partnership Council at its next scheduled meeting (announced separately).

The draft National Outreach Communications Plan will become the recommendation of the Sport Fishing and Boating Partnership Council to the Secretary of the Interior to implement the National Outreach and Communications Program required by the Sportfishing and Boating Safety Act of 1998.

Dated: August 7, 1998.

John G. Rogers,

Acting Director.

[FR Doc. 98–21755 Filed 8–12–98; 8:45 am]

BILLING CODE 4310–55–M

DEPARTMENT OF THE INTERIOR

Fish and Wildlife Service

Notice of Receipt of Applications for Permit

The following applicants have applied for a permit to conduct certain activities with endangered species. This notice is provided pursuant to Section 10(c) of the Endangered Species Act of 1973, *as amended* (16 U.S.C. 1531, *et seq.*):

Applicant: International Center for Gibbon Studies, Santa Clarita, California, PRT–001275.

The applicant requests a permit to import two captive-held Northern white-cheeked gibbons (*Hylobates leucogenys*) from the Moscow Zoo to enhance the survival of the species through captive breeding and scientific research.

Applicant: Wildlife Safari Museum, Inc., Mankato, MN, PRT–001134.

The applicant requests a permit to import one mounted specimen of a cheetah (*Acinonyx jubatus*) from Zimbabwe for the purpose of enhancement of the survival of the species through conservation education.

Applicant: Wake Forest University School of Medicine, Winston-Salem, NC, RT–001125.

The applicant requests a permit to export samples taken from ring-tailed lemur (*Lemur catta*) and black and whited ruffed lemur (*Varecia variegata variegata*) to the University of Newcastle, Australia for the purpose of scientific research.

Written data or comments should be submitted to the Director, U.S. Fish and Wildlife Service, Office of Management Authority, 4401 North Fairfax Drive, Room 700, Arlington, Virginia 22203 and must be received by the Director within 30 days of the date of this publication.

The public is invited to comment on the following application for a permit to conduct certain activities with marine mammals. The application was submitted to satisfy requirements of the Marine Mammal Protection Act of 1972, *as amended* (16 U.S.C. 1361 *et seq.*) and the regulations governing marine mammals (50 CFR 18).

Applicant: Mote Marine Laboratory, Sarasota, FL, PRT–001145.

Permit Type: Take for Scientific Research.

Name and Number of Animals: Manatee (*Trichecus manatus*), 2.

Summary of Activity to be Authorized: The applicant requests a permit to take 2 captive manatees by manipulating diets, manipulating water salinity, simulating conditions of transport, and collecting blood and urine samples for the purpose of scientific research to determine the cause(s) of elevated creatinine levels that occur when rehabilitated manatees are released into the wild.

Source of Marine Mammals: Captive manatees currently housed at Mote Marine Laboratory, Sarasota, FL.

Period of Activity: Up to 5 years from issuance date of permit, if issued.

Concurrent with the publication of this notice in the **Federal Register**, the Office of Management Authority is forwarding copies of this application to the Marine Mammal Commission and the Committee of Scientific Advisors for their review.

Written data or comments, requests for copies of the complete application, or requests for a public hearing on this application should be sent to the U.S. Fish and Wildlife Service, Office of Management Authority, 4401 N. Fairfax Drive, Room 700, Arlington, Virginia 22203, telephone 703/358–2104 or fax 703/358–2281 and must be received within 30 days of the date of publication of this notice. Anyone requesting a hearing should give specific reasons why a hearing would be appropriate. The holding of such a hearing is at the discretion of the Director.

Documents and other information submitted with these applications are available for review, *subject to the requirements of the Privacy Act and Freedom of Information Act,* by any party who submits a written request for a copy of such documents to the following office within 30 days of the date of publication of this notice: U.S. Fish and Wildlife Service, Office of Management Authority, 4401 North Fairfax Drive, Room 700, Arlington, Virginia 22203. Phone: (703/358-2104); FAX: (703/358–2281).

Dated: August 7, 1998.

MaryEllen Amtower,

Acting Chief, Branch of Permits, Office of Management Authority.

[FR Doc. 98–21668 Filed 8–12–98; 8:45 am]

BILLING CODE 4310–55–P

DEPARTMENT OF THE INTERIOR

Bureau of Land Management

[OR–030–08–1220–00: GP8–0278]

Notice of Meeting of the Oregon Trail Interpretive Center Advisory Board

AGENCY: National Historic Oregon Trail Interpretive Center, Vale District, Bureau of Land Management, Interior.

ACTION: Notice of meeting.

SUMMARY: Notice is given that a meeting of the Advisory Board for the National Historic Oregon Trail Interpretive Center will be held on Wednesday, September 2, 1998 from 8:00 a.m. to 4:00 p.m. at the Best Western Sunridge Inn, One Sunridge Lane, Baker City, Oregon 97814. At an appropriate time, the Board will recess for approximately one hour for lunch. Public comments will be received from 12:00 p.m. to 12:15 p.m., September 2, 1998. Topics to be discussed are the University of Idaho Marketing Internship, the Pilot Fee Demonstration Program, the draft Strategic Plan and reports from Coordinators of Subcommittees.

DATES: The meeting will begin at 8:00 a.m. and run to 4:00 p.m. September 2, 1998.

FOR FURTHER INFORMATION CONTACT: David B. Hunsaker, Bureau of Land Management, National Historic Oregon Trail, Interpretive Center, P.O. Box 987, Baker City, OR 97814, (Telephone 541–523–1845).

Edwin J. Singleton,

Vale District Manager.

[FR Doc. 98–21767 Filed 8–12–98; 8:45 am]

BILLING CODE 4310–33–M

DEPARTMENT OF THE INTERIOR

Bureau of Land Management

[CA–930–1430–01; CAS 271, CAS 528, and CAS 1632]

Termination of Classifications of Public Lands and Opening Order; California

AGENCY: Bureau of Land Management, Interior.

ACTION: Notice.

SUMMARY: This notice terminates, in their entirety, the following three classifications, which classified public lands as follows: CAS 271 and CAS 528—Unsuitable for public sale, and CAS 1632—Suitable for multiple use management. Those lands, classified by CAS 1632, will be opened to the operation of the public land laws including the mining laws, subject to valid existing rights, the provisions of existing withdrawals, other segregations of record, and the requirements of applicable law. All of the lands have been and remain open to the operation of the mineral leasing laws. The terminations are necessary to facilitate the completion of pending land exchanges.

EFFECTIVE DATE: Termination of the classifications are effective on August 13, 1998. The public lands will be

opened to entry at 10 a.m. on September 14, 1998.

FOR FURTHER INFORMATION CONTACT: Duane Marti, BLM California State Office (CA–931.4), 2135 Butano Drive, Sacramento, California 95825–0451; telephone number 916–978–4675.

SUPPLEMENTARY INFORMATION:

1(a). CAS 271

T. 32 S., R. 16 E., MDM
Sec. 4, SW¼NE¼, S½NW¼, and NE¼ SE¼.

The area described contains 160 acres in San Luis Obispo County.

The above described land was classified as unsuitable for public sale by a Classification Decision dated January 22, 1971. The land was not segregated, therefore, an opening order is not required.

(b). CAS 528

T. 17 S., R. 28 E., MDM
Sec. 24, NE¼NE¼.

The area described contains 40 acres in Tulare County.

The above described land was classified as unsuitable for public sale under the provisions of Sec. 2455 of Revised Statutes by a Classification Decision dated November 2, 1976. The land was not segregated, therefore, an opening order is not required.

(c). CAS 1632—Multiple Use Management

All public lands in:

T. 39 N., R. 5 E., MDM
Sec. 24.
T. 39 N., R. 6 E., MDM
Sec. 7.
T. 39 N., R. 7 E., MDM
Secs. 3, 4, 10, 11, and 15.
T. 40 N., R. 7 E., MDM
Secs. 14, 15, 23, and 26.
T. 39 N., R. 8 E., MDM
Secs. 4, 5, 8, 9, 10, 13, and 15.
T. 40 N., R. 8 E., MDM
Sec. 32.
T. 39 N., R. 9 E., MDM
Sec. 13, SW¼;
Secs. 14, 15, 17, 18, 19, 22, 23, 26, and 27.

The lands described aggregate approximately 6,150 acres in Modoc County.

The public lands described above were classified for multiple use management by a notice published in the **Federal Register** on December 20, 1969 (34 FR 20002), pursuant to the Act of September 19, 1964 (43 U.S.C. 1411–18). The lands were segregated from appropriation only under the agricultural land laws (43 U.S.C. Chs. 7 and 9; 25 U.S.C. sec. 334) and from sale under section 2455 of the Revised Statutes (43 U.S.C. 1171). The lands have remained open to all other applicable forms of appropriation including the mining and mineral leasing laws.

2. Pursuant to the Federal Land Policy and Management Act of 1976, as amended (43 U.S.C. 1701 *et seq.*), and the regulations contained in 43 CFR 2091.7, CAS 271, CAS 528, and CAS 1632 are hereby terminated in their entirety. The classifications no longer serve a needed purpose as to the lands described above.

3. At 10 a.m. on September 14, 1998, the public lands, as described above in paragraph 1(c) for CAS 1632, will be opened to the operation of the public land laws generally, subject to valid existing rights, the provision of existing withdrawals, other segregations of record, and the requirement of applicable law. All valid applications received at or prior to 10 a.m. on September 14, 1998 shall be considered as simultaneously filed at that time. Those received thereafter shall be considered in the order of filing.

Dated: August 14, 1998.

Elaine Marquis-Brong,

Acting State Director.

[FR Doc. 98–21707 Filed 8–12–98; 8:45 am]

BILLING CODE 4310–40–P

DEPARTMENT OF THE INTERIOR

Bureau of Land Management

[CA–930–1430–01; CACA 37422]

Exchange Termination and Opening Order; California

AGENCY: Bureau of Land Management, Interior.

ACTION: Notice.

SUMMARY: This notice terminates the segregative effect resulting from the notation to the public records for exchange CACA 37422. The lands will open to the operation of the public land laws, including the mining laws, subject to valid existing rights, the provisions of existing withdrawals, other segregations of record, and the requirements of applicable law. The lands are temporarily closed to surface entry and mining because of a pending land sale. All of the lands have been and remain open to the operation of the mineral leasing laws.

EFFECTIVE DATE: The public lands will be opened to entry at 10 a.m. on Friday, August 14, 1998.

FOR FURTHER INFORMATION CONTACT: Nancy Alex, BLM California State Office (CA–931), 2135 Butano Drive, Sacramento, California 95825; telephone number 916–978–4674.

SUPPLEMENTARY INFORMATION:

The Bureau of Land Management proposed to exchange the following lands and so noted the public land records. The Bureau of Land Management has decided not to proceed with this exchange proposal, and the segregation imposed by record notation is terminated.

T. 29 S., R. 40 E., MDM
Sec. 35, Lots 24, 25, 26, 28–47 inclusive, N½NW¼, and SW¼NW¼.

The area described contains approximately 300 acres in Kern County.

At 10 a.m. on August 14, 1998, the public lands as described above for CACA 37422 will be made available for sale under Section 203 of the Federal Land Policy and Management Act of 1976, 43 U.S.C. 1713, as noticed in BLM Notices of Realty Action for these specific lands.

Dated: August 7, 1998.

David McIlnay,

Chief Branch of Lands.

[FR Doc. 98–21713 Filed 8–12–98; 8:45 am]

BILLING CODE 4310–40–P

DEPARTMENT OF THE INTERIOR

Bureau of Land Management

[CO–050–1430–01] COC–61006, COC–61891

Notice of Realty Action; Recreation and Public Purposes (R&PP)

AGENCY: Bureau of Land Management, Interior.

ACTION: Notice of Realty Action.

SUMMARY: The following public lands in Boulder and Larimer Counties have been examined and found suitable for classification for lease or conveyance under the provisions of the Recreation and Public Purposes Act, as amended (43 U.S.C. 869 *et seq.*)

COC–61006—The City of Boulder, Division of Parks and Recreation, proposes to include the following lands in their Boulder Mountain Parks:

Sixth Principal Meridian

T. 1 N., R. 71 W.,
Sec. 26 and 35, Mineral Survey No. 17257, consisting of the Chrysolite, Key West, Little Chief, and Little Pittsburg lode mining claims.

Consisting of 19.714 acres in Boulder County.

COC–61891—Larimer County, Parks and Open Land Department, proposes to include the following lands in their Roberts Ranch project.

Sixth Principal Meridian

T. 10 N., R. 70 W.,
Sec. 33, NE¼,SW¼, NW¼SE¼

Containing 80.0 acres in Larimer County.

The lands are not needed for Federal purposes. Lease or conveyance for

recreational use is consistent with current BLM land use planning and would be in the public interest.

Upon publication of this notice in the **Federal Register**, the lands will be segregated from all forms of appropriation under the public land laws, including the general mining laws, except for lease or conveyance under the Recreation and Public Purposes Act.

DATES: Interested parties may submit comments regarding the proposed lease/conveyance or classification of the lands before September 30, 1998. Reference the applicable serial number in all correspondence. In the absence of any adverse comments, the classification will become effective October 13, 1998.

ADDRESS: District Manager, Canon City District Office, or Area Manager, Royal Gorge Resource Area, 3170 East Main, Canon City, Colorado 81212.

FOR FURTHER INFORMATION CONTACT: Jan Fackrell, Realty Specialist at (719) 269–8525.

SUPPLEMENTARY INFORMATION: *Classification comments*—interested parties may submit comments involving the suitability of the land for the purposes stated. Comments on the classification are restricted to whether the land is physically suited for the proposal, whether the use will maximize future use or uses of the land, whether the use is consistent with local planning and zoning, or if the use is consistent with State and Federal programs.

Application comments—interested parties may submit comments regarding the specific use proposed in the application and plan of development, whether the BLM followed proper administrative procedures in reaching the decision, or any other factor not directly related to the suitability of the land for the proposals.

This action is in response to applications by the city of Boulder and the County of Larimer. Lease of the lands will not be authorized until after the classification becomes effective. Lease or patent of the lands for recreational or public purpose use would be subject to the following terms, conditions, and reservations:

1. Provisions of the Recreation and Public Purposes Act and to all applicable regulations of the Secretary of the Interior.

2. All valid existing rights documented on the official public land records at the time of lease/patent issuance.

3. All minerals shall be reserved to the United States, together with the right to prospect for, mine, and remove the minerals.

4. Any other reservations that the authorized officer determines appropriate to ensure public access and proper management of Federal lands and interests therein.

Donnie R. Sparks,

District Manager.

[FR Doc. 98–21777 Filed 8–12–98; 8:45 am]

BILLING CODE 4310–JB–P

DEPARTMENT OF THE INTERIOR

Bureau of Land Management

[ID–016–5700–77; IDI–32149]

Notice of Realty Action, Sale of Public Land in Owyhee County, Idaho

AGENCY: Bureau of Land Management, Interior.

ACTION: Sale of Public Land in Owyhee County.

SUMMARY: The following described public land has been examined and through the public-supported land use planning process has been determined to be suitable for disposal by direct sale pursuant to Section 203 and 209 of the Federal Land Policy and Management Act of 1976 at no less than the appraised fair market value of $25,000. The land will not be offered for sale until at least 60 days after the date of publication of this notice **Federal Register**.

Boise Meridian, Idaho

T.4 S., R. 2 E.,
Section 6, Lot 20;
Section 7, Lot 5.
Containing 36.09 ± acres.

The patent, when issued, will contain a reservation to the United States for ditches and canals, as well as access over an existing road.

DATES: Upon publication of this notice in the **Federal Register**, the land described above will be segregated from appropriation under the public land laws, including the mining laws, except the sale provisions of the Federal Land Policy and Management Act. The segregative effect will end upon issuance of patent or 270 days from the date of publication, whichever occurs first.

ADDRESSES: Boise Field Office, 3948 Development Avenue, Boise, Idaho 83705–5389.

FOR FURTHER INFORMATION CONTACT: Del Bale, Realty Specialist, at the address shown above or (208) 384–3450.

SUPPLEMENTARY INFORMATION: This land is being offered by direct sale to Ralph and Marlena Robinson, of Marsing, Idaho, based on historic use and value of added improvements.

It has been determined that the subject parcel contains no known mineral values; therefore, mineral interests will be conveyed simultaneously. For a period of 45 days from the date of publication of this notice in the **Federal Register**, interested parties may submit comments to the NCA manager, Boise Field Office, at the above address. Any adverse comments will be reviewed by the NCA Manager, who may vacate or modify this realty action to accommodate the protest. If the protest is not accommodated, the comments are subject to review of the District Manager who may sustain, vacate, or modify this realty action. This realty action will become the final determination of the Department of the Interior.

Dated: August 6, 1998.

John Sullivan,

NCA Manager.

[FR Doc. 98–21776 Filed 8–12–98; 8:45 am]

BILLING CODE 4310–GG–M

DEPARTMENT OF THE INTERIOR

Bureau of Land Management

[ID–957–1030–00]

Idaho: Filing of Plats of Survey; Idaho

The plat of the following described land was officially filed in the Idaho State Office, Bureau of Land Management, Boise, Idaho, effective 9:00 a.m., August 4, 1998.

The plat representing the dependent resurvey of portions of the east boundary, subdivisional lines, and boundaries of certain mineral surveys, and the subdivision of sections 23 and 24, and the survey of lot 33 in section 23, T. 48 N., R. 4 E., Boise Meridian, Idaho, Group 997, was accepted August 4, 1998. This survey was executed to meet certain administrative needs of the Bureau of Land Management. All inquiries concerning the surveys of the above described land must be sent to the Chief, Cadastral Survey, Idaho State Office, Bureau of Land Management, 1387 South Vinnell Way, Boise, Idaho 83709–1657.

Dated: August 4, 1998.

Duane E. Olsen,

Chief Cadastral Surveyor for Idaho.

[FR Doc. 98–21769 Filed 8–12–98; 8:45 am]

BILLING CODE 4310–GG–P

DEPARTMENT OF THE INTERIOR

Bureau of Land Management

[ID–957–1220–00]

Idaho: Filing of Plats of Survey; Idaho

The plat of the following described land was officially filed in the Idaho State Office, Bureau of Land Management, Boise, Idaho, effective 9:00 a.m., August 5, 1998.

The plat representing the dependent resurvey of portions of the east and north boundaries, subdivisional lines, and of the 1909 meanders of the Snake River, the subdivision of section 1, and certain metes-and-bounds surveys and informative traverse of a portion of the present left bank of the Snake River within section 1, T. 6 S., R. 9 E., Boise Meridian, Idaho, Group 996, was accepted August 5, 1998. This survey was executed to meet certain administrative needs of the Bureau of Land Management.

All inquiries concerning the surveys of the above described land must be sent to the Chief, Cadastral Survey, Idaho State Office, Bureau of Land Management, 1387 South Vinnell Way, Boise, Idaho 83709–1657.

Dated: August 5, 1998.

Duane E. Olsen,

Chief Cadastral Surveyor for Idaho.

[FR Doc. 98–21770 Filed 8–12–98; 8:45 am]

BILLING CODE 4310–GG–P

INTERNATIONAL TRADE COMMISSION

[Investigations Nos. 751–TA–17–20]

Titanium Sponge From Japan, Kazakhstan, Russia, and Ukraine

Determination

On the basis of the record [1] developed in the subject investigations, the United States International Trade Commission determines, pursuant to section 751(b) of the Tariff Act of 1930 (19 U.S.C. § 1675(b)) (the Act), that revocation of the orders covering titanium sponge imports from Japan, Kazakhstan, Russia, and Ukraine is not likely to lead to continuation or recurrence of material injury to an industry in the United States. Titanium sponge is provided for in subheading 8108.10.50 of the Harmonized Tariff Schedule of the United States.

[1] The record is defined in sec. 207.2(f) of the Commission's Rules of Practice and Procedure (19 CFR § 207.2(f)).

Background

The Commission instituted these investigations effective March 23, 1998, following receipt of a request to review its affirmative determination in investigation No. AA1921–51, as it applied to imports from Russia.[2] This request was filed with the Commission on December 9, 1997, by counsel on behalf of TMC Trading International, Ltd., an Irish trading company involved in the distribution of titanium sponge from Russia, and TMC USA, Inc., its U.S. affiliate. Notice of the scheduling of the Commission's investigation and of a public hearing to be held in connection therewith was given by posting copies of the notice in the Office of the Secretary, U.S. International Trade Commission, Washington, DC, and by publishing the notice in the **Federal Register** of March 23, 1998 (63 FR 13873). The hearing was held in Washington, DC, on June 8, 1998, and all persons who requested the opportunity were permitted to appear in person or by counsel.

The Commission transmitted its determination in this investigation to the Secretary of Commerce on July 31, 1998. The views of the Commission are contained in USITC Publication 3119 (August 1998), entitled Titanium Sponge from Japan, Kazakhstan, Russia, and Ukraine: Investigations Nos. 751–TA–17–20.

Issued: August 7, 1998.

By order of the Commission.

Donna R. Koehnke,

Secretary.

[FR Doc. 98–21699 Filed 8–12–98; 8:45 am]

BILLING CODE 7020–02–P

[2] The Commission also instituted, on its own initiative, review investigations covering imports of titanium sponge from Japan, Kazakhstan, and Ukraine.

DEPARTMENT OF JUSTICE

Office of Community Oriented Policing Services; Agency Information Collection Activities: Proposed Collection; Comment Request

ACTION: Request OMB Emergency Approval; National Survey of Police Executives, District Commanders and Agencies

The Department of Justice, Office of Community Oriented Policing Services (COPS) has submitted the following information collection request (ICR) utilizing emergency review procedures, to the Office of Management and Budget (OMB) for review and clearance in accordance with the Paperwork Reduction Act of 1995. OMB approval has been requested by August 17, 1998. If granted, the emergency approval is only valid for 180 days. All comments and/or questions pertaining to this pending request for emergency approval must be directed to OMB, Office of Information and Regulatory Affairs, Attention: Department of Justice Desk Officer, Washington, DC 20530.

During the first 60 days of this same period a regular review of this information collection is also being undertaken. Comments are encouraged and will be accepted until; October 13, 1998. During the 60-day regular review all comments and suggestions, or questions regarding additional information, to include obtaining a copy of the proposed information collection instrument with instructions, should be directed to the COPS Office, Program/Policy Support and Evaluation Division, COPS Office, U.S. Department of Justice, 1100 Vermont Avenue, NW, Washington, DC 20530. Comments also may be submitted to the COPS Office via facsimile to 202–633–1386. Your comments should address one or more of the following four points:

(1) Evaluate whether the proposed collection of information is necessary for the proper performance of the functions of the agency, including whether the information will have practical utility;

(2) Evaluate the accuracy of the agency's estimate of the burden of the proposed collection of information, including the validity of the methodology and assumptions used;

(3) Enhance the quality, utility, and clarity of the information to be collected; and

(4) Minimize the burden of the collection of information on those who are to respond, including through the use of appropriate automated, electronic, mechanical, or other technological collection techniques or other forms of information technology, e.g., permitting electronic submission of responses.

Overview of this information collection:

(1) *Type of Information Collection:* New collection.

(2) *Title of the Form/Collection:* National Survey of Police Executives, District Commanders and Agencies

(3) *Agency form number, if any, and the applicable component of the Department of Justice sponsoring the collection:* Form: COPS 28/01. Office of Community Oriented Policing Services, U.S. Department of justice.

(4) *Affected public who will be asked or required to respond, as well as a brief abstract:* A sample of local law

enforcement agency heads and precinct/district commanders that have received grant funding from the COPS Office will be surveyed regarding the nature and extent of community policing implementation in their agencies and precincts/districts.

To uphold its mandate, the COPS Office has awarded hiring and redeployment grants, innovative grants, and training grants to over 10,000 law enforcement agencies nationwide. While the COPS Office has made significant strides in funding officers it is important to consider the 1994 Crime Bill and the emergence of COPS in a long-term perspective. The proposed survey aims to answer questions regarding the nature and extent of community policing implementation across the United States.

COPS data and prior national surveys of community policing implementation are limited in their capacity to describe how extensive community policing implementation is. In addition, existing data sets do not permit exploration of the likelihood that implementation of community policing varies within jurisdictions, particularly large ones that are decentralized to precinct or district levels. The National Survey of Police Executives, District Commanders and Agencies will be able to capture variations within a jurisdiction.

Surveys will incorporate elements that the COPS Office has identified as key components of community policing and will draw upon prior surveys, other literature, and prior knowledge to develop a comprehensive listing of community policing elements. Questions will provide more precise information about the extent to which each element is implemented.

(5) *An estimate of the total number of respondents and the amount of time estimated for an average respondent to respond:* This collection is being conducted in two phases as a pilot survey and a larger follow-up survey. Two sections, Section A and Section B will be utilized; a total of approximately 6700 respondents will be surveyed. Estimated time to complete Section A is 20 minutes with no preparation time; estimated time to complete Section B is 1.5 hours including preparation time.

(6) *An estimate of the total public burden (in hours) associated with the collection:* Approximately 6141.6 hours.

In additional information is required contact: Mr. Robert B. Briggs, Clearance Officer, United States Department of Justice, Information Management and Security Staff, Justice Management Division, Suite 850, Washington Center, 1001 G Street, NW, Washington, DC 20530.

Dated: August 6, 1998.

Robert B. Briggs,

Department Clearance Officer, United States Department of Justice

[FR Doc. 98–21685 Filed 8–12–98; 8:45 am]

BILLING CODE 4410–AT–M

DEPARTMENT OF JUSTICE

Immigration and Naturalization Service

Agency Information Collection Activities: Extension of Existing Collection; Comment Request

ACTION: Notice of information collection under review; application by refugee for waiver of ground of excludability.

The Department of Justice, Immigration and Naturalization Service has submitted the following information collection request for review and clearance in accordance with the Paperwork Reduction Act of 1995. The proposed information collection is published to obtain comments from the public and affected agencies. Comments are encouraged and will be accepted for ''sixty days'' until October 13, 1998.

Written comments and suggestions from the public and affected agencies concerning the proposed collection of information should address one or more of the following four points:

(1) Evaluate whether the proposed collection of information is necessary fro the proper performance of the functions of the agency, including whether the information will have practical utility;

(2) Evaluate the accuracy of the agencies estimate of the burden of the proposed collection of information, including the validity of the methodology and assumptions used;

(3) Enhance the quality, utility, and clarity of the information to be collected; and

(4) Minimize the burden of the collection of information on those who are to respond, including through the use of appropriate automated, electronic, mechanical, or other technological collection techniques or other forms of information technology, e.g., permitting electronic submission of responses.

Overview of this information collection:

(1) *Type of Information Collection: Extension of a currently approved collection.*

(2) *Title of the Form/Collection:* Application by Refugee for Waiver of Grounds of Excludability.

(3) *Agency from number, if any, and the applicable component of the Department of Justice sponsoring the collection:* Form I–602. Office of International Affairs, Immigration and Naturalization Service.

(4) *Affected public who will be asked or required to respond, as well as a brief abstract:* Primary: Individual and households. This form is used by the Service to determine eligibility for a waiver.

(5) *An estimate of the total number of respondents and the amount of time estimated for an average respondent to respond:* 2,500 responses at 15 minutes (.25) per response.]

(6) *An estimate of the total public burden (in hours) associated with the collection:* 625 annual burden hours.

If you have additional comments, suggestions, or need a copy of the proposed information collection instrument with instructions, or addition information, please contact Richard A. Sloan 202–514–3291, Director, Policy Directives and Instructions Branch, Immigration and Naturalization Service, U.S. Department of Justice, Room 5307, 425 I Street, NW., Washington, DC 20536. Additionally, comments and/or suggestions regarding the item(s) contained in this notice, especially regarding the estimated public burden and associated response time may also be directed to Mr. Richard A. Sloan.

If additional information is required contact: Ms Brenda E. Dyer, Deputy Clearance Officer, United States Department of Justice, Information Management and Security Staff, Justice Management Division, Suite 850, Washington Center, 1001 G Street, NW., Washingtion, DC 20530.

Dated: August 6, 1998.

Brenda E. Dyer,

Deputy Clearance Officer, United States Department of Justice.

[FR Doc. 98–21686 Filed 8–12–98; 8:45 am]

BILLING CODE 4410–18–M

DEPARTMENT OF JUSTICE

Immigration and Naturalization Service

Agency Information Collection Activities: Extension of Existing Collection; Comment Request

ACTION: Notice of Information Collection Under Review; Application for Waiver of the Foreign Residence Requirement of Section 212(e) of the Immigration and Nationality Act.

The Department of Justice, Immigration and Naturalization Service has submitted the following information collection request for review and clearance in accordance with the

Paperwork Reduction Act of 1995. The proposed information collection is published to obtain comments from the public and affected agencies. Comments are encouraged and will be accepted for ''sixty days'' until October 13, 1998.

Written comments and suggestions from the public and affected agencies concerning the proposed collection of information should address one or more of the following four points:

(1) Evaluate whether the proposed collection of information is necessary for the proper performance of the functions of the agency, including whether the information will have practical utility;

(2) Evaluate the accuracy of the agencies estimated of the burden of the proposed collection of information including the validity of the methodology and assumption used;

(3) Enhance the quality, utility, and clarity of the information to be collected; and

(4) Minimize the burden of the collection of information on those who are to respond, including through the use of appropriate automated, electronic, mechanical, or other technological collection techniques or other forms of information technology, e.g., permitting electronic submission of responses.

Overview of this information collection:

(1) *Type of Information Collection:* Extension of a currently approved collection.

(2) *Title of the Form/Collection:* Application for Waiver of the Foreign Residence Requirement of Section 212(e) of the Immigration and Nationality Act.

(3) *Agency form number, if any, and the applicable component of the Department of Justice sponsoring the collection:* For I–612. Adjudications Division, Immigration and Naturalization Service.

(4) *Affected public who will be asked or required to respond, as well as a brief abstract:* Primary: Individuals and households. This form is used by the Service to determine eligibility for a waiver.

(5) *An estimate of the total number of respondents and the amount of time estimated for an average respondent to respond:* 1,300 responses at 20 minutes (.333) per response.

(6) *An estimate of the total public burden (in hours) associated with the collection:* 432 annual burden hours.

If you have additional comments, suggestions, or need a copy of the proposed information collection instrument with instructions, or additional information, please contact Richard A. Sloan 202–514–3291, Director, Policy Directives and Instructions Branch, Immigration and Naturalization Service, U.S. Department of Justice, Room 5307, 425 I Street, NW., Washington, DC 20536. Additionally, comments and/or suggestions regarding the item(s) contained in this notice, especially regarding the estimated public burden and associated response time may also be directed to Mr. Richard A. Sloan.

If addition information is required contact: Ms Brenda Dyer, Deputy Clearance Officer, United States Department of Justice, Information Management and Security Staff, Justice Management Division, Suite 850, Washington Center, 1001 G Street, NW., Washington, DC 20530.

Dated August 6, 1998.

Brenda E. Dyer,

Deputy Clearance Officer, United States Department of Justice.

[FR Doc. 98–21687 Filed 8–12–98; 8:45 am]

BILLING CODE 4410–18–M

DEPARTMENT OF JUSTICE

Immigration and Naturalization Service

Agency Information Collection Activities: Extension of Existing Collection; Comment Request

ACTION: Notice of information collection under review; Petition to classify orphan as an immediate relative and application for advance processing of orphan petition.

The Department of Justice, Immigration and Naturalization Service has submitted the following information collection request for review and clearance in accordance with the Paperwork Reduction Act of 1995. The proposed information collection is published to obtain comments from the public and affected agencies. Comments are encouraged and will be accepted for ''sixty days'' until October 13, 1998.

Written comments and suggestions from the public and affected agencies concerning the proposed collection of information should address one or more of the following four points:

(1) Evaluate whether the proposed collection of information is necessary for the proper performance of the functions of the agency, including whether the information will have practical utility;

(2) Evaluate the accuracy of the agencies estimate of the burden of the proposed collection of information, including the validity of the methodology and assumptions used;

(3) Enhance the quality, utility, and clarity of the information to be collected; and

(4) Minimize the burden of the collection of information on those who are to respond, including through the use of appropriate automated, electronic, mechanical, or other technological collection techniques or other forms of information technology, e.g., permitting electronic submission of responses.

Overview of this information collection:

(1) *Type of Information Collection: Extension of a currently approved collection.*

(2) *Title of the Form/Collection:* Petition to Classify Orphan as an Immediate Relative and Application for Advance Processing of Orphan Petition.

(3) *Agency form number, if any, and the applicable component of the Department of Justice sponsoring the collection:* Form I–600 and I–600A. Adjudications Division, Immigration and Naturalization Service.

(4) *Affected public who will be asked or required to respond, as well as a brief abstract:* Primary: Individuals and households. This form is used by the Service to determine immigrant eligibility and advance processing of orphans.

(5) *An estimate of total number of respondents and the amount of time estimated for an average respondent to respond:* 34,000 responses at 30 minutes (.50) per response.

(6) *An estimate of the total public burden (in hours) associated with the collection:* 17,000 annual burden hours.

If you have additional comments, suggestions, or need a copy of the proposed information collection instrument with instructions, or additional information, please contact Richard A. Sloan 202–514–3291, Director, Policy Directives and Instructions branch, Immigration and Naturalization Service, U.S. Department of Justice, Room 5307, 425 I Street, NW., Washington, DC 20536. Additionally, comments and/or suggestions regarding the item(s) contained in this notice, especially regarding the estimated public burden and associated response time may also be directed to Mr. Richard A. Sloan.

If additional information is required contact: Ms. Brenda E. Dyer, Deputy Clearance Officer, United States Department of Justice, Information Management and Security Staff, Justice Managment Division, Suite 850, Washington, Center, 1001 G Street, NW., Washington, DC 20530.

Dated: August 6, 1998.

Brenda E. Dyer,

Deputy Clearance Officer, United Sates Department of Justice.

[FR Doc. 98–21688 Filed 8–12–98; 8:45 am]

BILLING CODE 4410–18–M

DEPARTMENT OF JUSTICE

Immigration and Naturalization Service

Agency Information Collection Activities: Extension of Existing Collection; Comment Request

ACTION: Notice of Information Collection Under Review; Application to Preserve Residence for Naturalization.

The Department of Justice, Immigration and Naturalization Service has submitted the following information collection request for review and clearance in accordance with the Paperwork Reduction Act of 1995. The proposed information collection is published to obtain comments from the public and affected agencies. Comments are encouraged and will be accepted for ''sixty days'' until October 13, 1998.

Written comments and suggestions from the public and affected agencies concerning the proposed collection of information should address one or more of the following four points:

(1) Evaluate whether the proposed collection of information is necessary for the proper performance of the functions of the agency, including whether the information will have practical utility;

(2) Evaluate the accuracy of the agencies estimate of the burden of the proposed collection of information, including the validity of the methodology and assumptions used;

(3) Enhance the quality, utility, and clarity of the information to be collected; and

(4) Minimize the burden of the collection of information on those who are to respond, including through the use of appropriate automated, electronic, mechanical, or other technological collection techniques or other forms of information technology, e.g., permitting electronic submission of responses.

Overview of this information collection:

(1) *Type of Information Collection:* Extension of a currently approved collection.

(2) *Title of the Form/Collection:* Application to Preserve Residence for Naturalization.

(3) *Agency form number, if any, and the applicable component of the Department of Justice sponsoring the collection:* Form N–470. Adjudications Division, Immigration and Naturalization Service.

(4) *Affected public who will be asked or required to respond, as well as a brief abstract:* Primary: Individuals or households. The information will be used to determine whether an alien who intends to be absent from the United States for a period of one year or more is eligible to preserve residence for naturalization purposes.

(5) *An estimate of the total number of respondents and the amount of time estimated for an average respondent to respond:* 1,000 responses at 15 minutes (.25) per response.

(6) *An estimate of the total public burden (in hours) associated with the collection:* 250 annual burden hours.

If you have additional comments, suggestions, or need a copy of the proposed information collection instrument with instructions, or additional information, please contact Richard A. Sloan, 202–514–3291, Director, Policy Directives and Instructions Branch, Immigration and Naturalization Service, U.S. Department of Justice, Room 5307, 425 I Street, NW., Washington, DC 20536. Additionally, comments and/or suggestions regarding the item(s) contained in this notice, especially regarding the estimated public burden and associated response time may also be directed to Mr. Richard A. Sloan.

If additional information is required contact: Ms. Brenda E. Dyer, Deputy Clearance Officer, United States Department of Justice, Information Management and Security Staff, Justice Management Division, Suite 850, Washington Center, 1001 G Street NW., Washington, DC 20530.

Dated: August 6, 1998.

Brenda E. Dyer,

Deputy Clearance Officer, United States Department of Justice.

[FR Doc. 98–21689 Filed 8–12–98; 8:45 am]

BILLING CODE 4410–18–M

DEPARTMENT OF JUSTICE

Immigration and Naturalization Service

Agency Information Collection Activities: Extension of Existing Collection; Comment Request

ACTION: Notice of Information Collection Under Review; Application of Temporary Replacement Card.

The Department of Justice, Immigration and Naturalization Service has submitted the following information collection request for review and clearance in accordance with the Paperwork Reduction Act of 1995. The proposed information collection is published to obtain comments from the public and affected agencies. Comments are encouraged and will be accepted for ''sixty days'' until October 13, 1998.

Written comments and suggestions from the public and affected agencies concerning the proposed collection of information should address one or more of the following four points:

(1) Evaluate whether the proposed collection of information is necessary for the proper performance of the functions of the agency, including whether the information will have practical utility;

(2) Evaluate the accuracy of the agencies estimate of the burden of the proposed collection of information, including the validity of the methodology and assumptions used;

(3) Enhance the quality, utility, and clarity of the information to be collected; and

(4) Minimize the burden of the collection of information on those who are to respond, including through the use of appropriate automated, electronic, mechanical, or other technological collection techniques of other forms of information technology, e.g., permitting electronic submission of responses.

Overview of this information collection:

(1) *Type of Information Collection:* Extension of a currently approved collection.

(2) *Title of the Form/Collection:* Application of Temporary Replacement Card.

(3) *Agency form number, if any, and the applicable component of the Department of Justice sponsoring the collection:* Form I–695. Adjudications Division, Immigration and Naturalization Service.

(4) *Affected public who will be asked or required to respond, as well as a brief abstract:* Primary: Individuals or households. The information collected by this application will be used by the INS to consider application for replacement of temporary resident card. It will also be used to request a new card on the occasion that one has been lost, stolen, or destroyed.

(5) *An estimate of the total number of respondents and the amount of time estimated for an average respondent to respond:* 100,000 responses at 10 minutes (.166) per response.

(6) *An estimate of the total public burden (in hours) associated with the collection:* 16,600 annual burden hours.

If you have additional comments, suggestions, or need a copy of the

proposed information collection instrument with instructions, or additional information, please contact Richard A. Sloan 202–514–3291, Director, Policy Directives and Instructions Branch, Immigration and Naturalization Service, U.S. Department of Justice, Room 5307, 425 I Street, NW., Washington, DC 20536. Additionally, comments and/or suggestions regarding the item(s) contained in this notice, especially regarding the estimated public burden and associated response time may also be directed to Mr. Richard A. Sloan.

If additional information is required contact: Ms. Brenda E. Dyer, Deputy Clearance Officer, United States Department of Justice, Information Management and Security Staff, Justice Management Division, Suite 850, Washington, Center, 1001 G Street NW., Washington, DC 20530.

Dated: August 6, 1998.

Brenda E. Dyer,

Deputy Clearance Officer, United States Department of Justice.

[FR Doc. 98–21690 Filed 8–12–98; 8:45 am]

BILLING CODE 4410–18–M

DEPARTMENT OF JUSTICE

Immigration and Naturalization Service

Agency Information Collection Activities: Extension of Existing Collection; Comment Request

ACTION: Notice of Information Collection Under Review; Request for Information From Selective Service Files.

The Department of Justice, Immigration and Naturalization Service has submitted the following information collection request for review and clearance in accordance with the Paperwork Reduction Act of 1995. The proposed information collection is published to obtain comments from the public and affected agencies. Comments are encouraged and will be accepted for ''sixty days'' until October 13, 1998.

Written comments and suggestions from the public and affected agencies concerning the proposed collection of information should address one or more of the following four points:

(1) Evaluate whether the proposed collection of information is necessary for the proper performance of the functions of the agency, including whether the information will have practical utility;

(2) Evaluate the accuracy of the agencies estimate of the burden of the proposed collection of information, including the validity of the methodology and assumptions used;

(3) Enhance the quality, utility, and clarity of the information to be collected; and

(4) Minimize the burden of the collection of information on those who are to respond, including through the use of appropriate automated, electronic, mechanical, or other technological collection techniques or other forms of information technology, e.g., permitting electronic submission of responses.

Overview of this information collection:

(1) *Type of Information Collection:* Extension of a currently approved collection.

(2) *Title of the Form/Collection:* Request for Information From Selective Service Files.

(3) *Agency form number, if any, and the applicable component of the Department of Justice sponsoring the collection:* Form N–422. Adjudications Division, Immigration and Naturalization Service.

(4) *Affected public who will be asked or required to respond, as well as a brief abstract:* Primary: Individuals or households. This form is necessary to obtain information from Selective Service to determine eligibility for naturalization as provided in the I & N Act.

(5) *An estimate of the total number of respondents and the amount of time estimated for an average respondent to respond:* 2,000 responses at 10 minutes (.166) per response.

(6) *An estimate of the total public burden (in hours) associated with the collection:* 332 annual burden hours.

If you have additional comments, suggestions, or need a copy of the proposed information collection instrument with instructions, or additional information, please contact Richard A. Sloan 202–514–3291, Director, Policy Directives and Instructions Branch, Immigration and Naturalization Service, U.S. Department of Justice, Room 5307, 425 I Street, NW., Washington, DC 20536. Additionally, comments and/or suggestions regarding the item(s) contained in this notice, especially regarding the estimated public burden and associated response time may also be directed to Mr. Richard A. Sloan.

If additional information is required contact: Ms. Brenda E. Dyer, Deputy Clearance Officer, United States Department of Justice, Information Management and Security Staff, Justice Management Division, Suite 850, Washington Center, 1001 G Street, NW., Washington, DC 20530.

Dated: August 6, 1998.

Brenda E. Dyer,

Deputy Clearance Officer, United States Department of Justice.

[FR Doc. 98–21691 Filed 8–12–98; 8:45 am]

BILLING CODE 4410–18–M

DEPARTMENT OF JUSTICE

Immigration and Naturalization Service

Agency Information Collection Activities; Extension of Existing Collection; Comment Request

ACTION: Notice of Information Collection Under Review; Change of Address Card.

The Department of Justice, Immigration and Naturalization Service has submitted the following information collection request for review and clearance in accordance with the Paperwork Reduction Act of 1995. The proposed information collection is published to obtain comments from the public and affected agencies. Comments are encouraged and will be accepted for ''sixty days'' until October 13, 1998.

Written comments and suggestions from the public and affected agencies concerning the proposed collection of information should address one or more of the following four points;

(1) Evaluate whether the proposed collection of information is necessary for the proper performance of the functions of the agency, including whether the information will have practical utility;

(2) Evaluate the accuracy of the agencies estimate of the burden of the proposed collection of information, including the validity of the methodology and assumptions used;

(3) Enhance the quality, utility, and clarity of the information to be collected; and

(4) Minimize the burden of the collection of information on those who are to respond, including through the use of appropriate automated, electronic, mechanical, or other technological collection techniques or other forms of information technology, e.g., permitting electronic submission of responses.

Overview of this information collection:

(1) *Type of Information Collection: Extension of a currently approved collection.*

(2) *Title of the Form/Collection:* Change of Address Card.

(3) *Agency form number, if any, and the applicable component of the Department of Justice sponsoring the collection:* Form I–697A. Adjudications

Division, Immigration and Naturalization Service.

(4) *Affected public who will be asked or required to respond, as well as a brief abstract:* Primary: Individuals or households. The Service uses the information to update on applicant's address in the Legalization Automated Database. The country, date of birth, and registration number and elements needed to identify specific applicants who have similar names and/or don't provide an A-number, registration number, or provide a wrong A-number.

(5) *An estimate of the total number of respondents and the amount of time estimated for an average respondent to respond:* 200,000 respond at 5 minutes (.083) per response.

(6) *An estimate of the total public burden (in hours) associated with the collection:* 16,600 annual burden hours.

If you have additional comments, suggestions, or need a copy of the proposed information collection instrument with instructions, or additional information, please contact Richard A. Sloan, 202–514–3291, Director, Policy Directives and Instructions Branch, Immigration and Naturalization Service, U.S. Department of Justice, Room 5307, 425 I Street, NW., Washington, DC 20536. Additionally, comments and/or suggestions regarding the item(s) contained in this notice, especially regarding the estimated public burden and associated response time may also be directed to Mr. Richard A. Sloan.

If additional information is required contact: Ms. Brenda E. Dyer, Deputy Clearance Officer, United States Department of Justice, Information Management and Security Staff, Justice Management Division, Suite 850, Washington Center, 1001 G Street, NW., Washington, DC 20530.

Dated: August 6, 1998.

Brenda E. Dyer,

Deputy Clearance Officer, United States Department of Justice.

[FR Doc. 98–21692 Filed 8–12–98; 8:45 am]

BILLING CODE 4410–18–M

DEPARTMENT OF JUSTICE

Immigration and Naturalization Service

Agency Information Collection Activities: Extension of Existing Collection; Comment Request

ACTION: Notice of Information Collection Under Review; Request for Verification of Naturalization.

The Department of Justice, Immigration and Naturalization Service has submitted the following information collection request for review and clearance in accordance with the Paperwork Reduction Act of 1995. The proposed information collection is published to obtain comments from the public and affected agencies. Comments are encouraged and will be accepted for ''sixty days'' until October 13, 1998.

Written comments and suggestions from the public and affected agencies concerning the proposed collection of information should address one or more of the following four points:

(1) Evaluate whether the proposed collection of information is necessary for the proper performance of the functions of the agency, including whether the information will have practical utility;

(2) Evaluate the accuracy of the agencies estimate of the burden of the proposed collection of information, including the validity of the methodology and assumptions used;

(3) Enhance the quality, utility, and clarity of the information to be collected; and

(4) Minimize the burden of the collection of information on those who are to respond, including through the use of appropriate automated, electronic, mechanical, or other technological collection techniques or other forms of information technology, e.g., permitting electronic submission of responses.

Overview of this information collection:

(1) *Type of Information Collection:* Extension of a currently collection.

(2) *Title of the Form/Collection:* Request for Verification of Naturalization.

(3) *Agency form number, if any, and the applicable component of the Department of Justice sponsoring the collection:* Form N–25, Adjudications Division, Immigration and Naturalization Service.

(4) *Affected public who will be asked or required to respond, as well as a brief abstract:* Primary: Individual or households. This form is used to obtain information form the records of a clerk of court which may be needed by a person applying for benefits under various provisions of the I & N Act.

(5) *An estimate of the total number of respondents and the amount of time estimated for an average respondent to respond:* 1,000 responses at 15 minutes (.25) per response.

(6) *An estimate of the total public burden (in hours) associated with the collection:* 250 annual burden hours.

If you have additional comments, suggestions, or need a copy of the proposed information collection instrument with instructions, or additional information, please contact Richard A. Sloan, 202–514–3291, Director, Policy Directives and Instructions Branch, Immigration and Naturalization Service, U.S. Department of Justice, Room 5307, 425 I Street, NW., Washington, DC 20536. Additionally, comments and/or suggestions regarding the item(s) contained in this notice, especially regarding the estimated public burden and associated response time may also be directed to Mr. Richard A. Sloan.

If additional information is required contact: Ms. Brenda E. Dyer, Deputy Clearance Officer, United States Department of Justice, Information Management and Security Staff, Justice Management Division, Suite 850, Washington Center, 1001 G Street, NW., Washington, DC 20530.

Dated: August 6, 1998.

Brenda E. Dyer,

Deputy Clearance Officer, United States Department of Justice.

[FR Doc. 98–21693 Filed 8–12–98; 8:45 am]

BILLING CODE 4410–18–M

DEPARTMENT OF JUSTICE

Immigration and Naturalization Service

Agency Information Collection Activities: Extension of Existing Collection; Comment Request

ACTION: Notice of Information Collection Under Review; Application for Certificate of Citizenship.

The Department of Justice, Immigration and Naturalization Service has submitted the following information collection request for review and clearance in accordance with the Paperwork Reduction Act of 1995. The proposed information collection is published to obtain comments from the public and affected agencies. Comments are encouraged and will be accepted for ''sixty days'' until October 13, 1998.

Written comments and suggestions from the public and affected agencies concerning the proposed collection of information should address one or more of the following four points:

(1) Evaluate whether the proposed collection of information is necessary for the proper performance of the functions of the agency, including whether the information will have practical utility;

(2) Evaluate the accuracy of the agencies estimate of the burden of the proposed collection of information, including the validity of the methodology and assumptions used;

(3) Enhance the quality, utility, and clarity of the information to be collected; and

(4) Minimize the burden of the collection of information on those who are to respond, including through the use of appropriate automated, electronic, mechanical, or other technological collection techniques or other forms of information technology, e.g., permitting electronic submission of responses.

Overview of this information collection:

(1) *Type of Information Collection:* Extension of a currently approved collection.

(2) *Title of the Form/Collection:* Application for Certificate of Citizenship.

(3) *Agency form number, if any, and the applicable component of the Department of Justice sponsoring the collection:* Form N–600. Adjudications Division, Immigration and Naturalization Service.

(4) *Affected public who will be asked or required to respond, as well as a brief abstract:* Primary: Individuals or households. This form is provided by the Service as a uniform format for obtaining essential data necessary to determine the applicant's eligibility for the requested immigration benefit.

(5) *An estimate of the total number of respondents and the amount of time estimated for an average respondent to respond:* 30,000 responses at 60 minutes (1) per response.

(6) *An estimate of the total public burden (in hours) associated with the collection:* 30,00 annual burden hours.

If you have additional comments, suggestions, or need a copy of the proposed information collection instrument with instructions, or additional information, please contact Richard A. Sloan 202–514–3291, Director, Policy Directives and Instructions Branch, Immigration and Naturalization Service, U.S. Department of Justice, Room 5307, 425 I Street, NW., Washington, DC 20536. Additionally, comments and/or suggestions regarding the item(s) contained in this notice, especially regarding the estimated public burden and associated response time may also be directed to Mr. Richard A. Sloan.

If additional information is required contact: Ms. Brenda E. Dyer, Deputy Clearance Officer, United States Department of Justice, Information Management and Security Staff, Justice Management Division, Suite 850, Washington Center, 1001 G Street, NW., Washington, DC 20530.

Dated: August 6, 1998.

Brenda E. Dyer,

Deputy Clearance Officer, United States Department of Justice.

[FR Doc. 98–21694 Filed 8–12–98; 8:45 am]

BILLING CODE 4410–18–M

DEPARTMENT OF JUSTICE

Immigration and Naturalization Service

Agency Information Collection Activities: Extension of Existing Collection; Comment Request

ACTION: Notice of Information Collection Under Review; Request for Hearing on a Decision in Naturalization Proceedings Under Sec. 336.

The Department of Justice, Immigration and Naturalization Service has submitted the following information collection request for review and clearance in accordance with the Paperwork Reduction Act of 1995. The proposed information collection is published to obtain comments from the public and affected agencies. Comments are encouraged and will be accepted for ''sixty days'' until October 13, 1998.

Written comments and suggestions from the public and affected agencies concerning the proposed collection of information should address one or more of the following four points:

(1) Evaluate whether the proposed collection of information is necessary for the proper performance of the functions of the agency, including whether the information will have practical utility;

(2) Evaluate the accuracy of the agencies' estimate of the burden of the proposed collection of information, including the validity of the methodology and assumptions used;

(3) Enhance the quality, utility, and clarity of the information to be collected; and

(4) Minimize the burden of the collection of information on those who are to respond, including through the use of appropriate automated, electronic, mechanical, or other technological collection techniques or other forms of information technology, e.g., permitting electronic submission of responses.

Overview of this information collection:

(1) *Type of Information Collection:* Extension of a currently approved collection.

Title of the Form/Collection: Request for Hearing on a Decision in Naturalization Proceedings Under Sec. 336.

(3) *Agency form number, if any, and the applicable component of the Department of Justice sponsoring the collection:* Form N–336. Adjudications Division, Immigration and Naturalization Service.

(4) *Affected public who will be asked or required to respond, as well as a brief abstract:* Primary: individuals or households. This form will be used by applicants for naturalization to pursue the only avenue available to them in the appeal process.

(5) *An estimate of the total number of respondents and the amount of time estimated for an average respondent to respond:* 5,000 responses at 165 minutes (2.75) per response.

(6) *An estimate of the total public burden (in hours) associated with the collection:* 13,750 annual burden hours.

If you have additional comments, suggestions, or need a copy of the proposed information collection instrument with instructions, or additional information, please contact Richard A. Sloan 202–514–3291, Director, Policy Directives and Instructions Branch, Immigration and Naturalization Service, U.S. Department of Justice, Room 5307, 425 I Street, NW., Washington, DC 20536. Additionally, comments and/or suggestions regarding the item(s) contained in this notice, especially regarding the estimated public burden and associated response time may also be directed to Mr. Richard A. Sloan.

If additional information is required contact: Ms. Brenda E. Dyer, Deputy Clearance Officer, United States Department of Justice, Information Management and Security Staff, Justice Management Division, Suite 850, Washington Center, 1001 G Street, NW., Washington, DC 20530.

Dated: August 6, 1998.

Brenda E. Dyer,

Deputy Clearance Officer, United States Department of Justice.

[FR Doc. 98–21695 Filed 8–12–98; 8:45 am]

BILLING CODE 4410–18–M

DEPARTMENT OF JUSTICE

Immigration and Naturalization Service

Agency Information Collection Activities: Extension of Existing Collection; Comment Request

ACTION: Notice of Information Collection Under Review; Guam Visa Waiver Agreement.

The Department of Justice, Immigration and Naturalization Service has submitted the following information

collection request for review and clearance in accordance with the Paperwork Reduction Act of 1995. The proposed information collection is published to obtain comments from the public and affected agencies. Comments are encouraged and will be accepted for ''sixty days'' until October 13, 1998.

Written comments and suggestions from the public and affected agencies concerning the proposed collection of information should address one or more of the following four points:

(1) Evaluate whether the proposed collection of information is necessary for the proper performance of the functions of the agency; including whether the information will have practical utility;

(2) Evaluate the accuracy of the agencies, estimate of the burden of the proposed collection of information, including the validity of the methodology and assumptions used;

(3) Enhance the quality, utility, and clarity of the information to be collected; and

(4) Minimize the burden of the collection of information on those who are to respond, including through the use of appropriate automated, electronic, mechanical, or other technological collection techniques or other forms of information technology, e.g., permitting electronic submission of responses.

Overview of this information collection:

(1) *Type of Information Collection:* Extension of a currently approved collection.

(2) *Title of the Form/Collection:* Guam Visa Waiver Agreement.

(3) *Agency form number, if any, and the applicable component of the Department of Justice sponsoring the collection:* Form I–760. Inspections Division, Immigration and Naturalization Service.

(4) *Affected public who will be asked or required to respond, as well as a brief abstract:* Primary: Business or other for-profit. Public Law 99–396 provides for certain aliens to be exempt from the nonimmigrant visa requirements if seeking entry into and stay on Guam as a visitor under certain conditions. This form, the I–760, is the agreement between the carrier of the alien and the United States. Application by aliens is made on another form, the I–736.

(5) *An estimate of the total number of respondents and the amount of time estimated for an average respondent to respond:* 5 responses at 60 minutes (1) per response.

(6) *An estimate of total public burden (in hours) associated with the collection:* 5 annual burden hours.

If you have additional comments, suggestions, or need a copy of the proposed information collection instrument with instructions, or additional information, please contact Richard A. Sloan 202–514–3291, Director, Policy Directives and Instructions Branch, Immigration and Naturalization Service, U.S. Department of Justice, Room 5307, 425 I Street, NW., Washington, DC 20536. Additionally, comments and/or suggestions regarding the item(s) contained in this notice, especially regarding the estimated public burden and associated response time any also be directed to Mr. Richard A. Sloan.

If additional information is required contact: Ms. Brenda E. Dyer, Deputy Clearance Officer, United States Department of Justice, Information Management and Security Staff, Justice Management Division, Suite 850, Washington Center, 1001 G Street, NW., Washington, DC 20530.

Dated: August 6, 1998.

Brenda E. Dyer,

Deputy Clearance Officer, United States Department of Justice.

[FR Doc. 98–21696 Filed 8–12–98; 8:45 am]

BILLING CODE 4410–18–M

DEPARTMENT OF JUSTICE

Immigration and Naturalization Service

Agency Information Collection Activities; Extension of Existing Collection; Comment Request

ACTION: Notice of Information Collection Under Review; Application for Waiver of Grounds of Excludability.

The Department of Justice, Immigration and Naturalization Service has submitted the following information collection request for review and clearance in accordance with the Paperwork Reduction Act of 1995. The proposed information collection is published to obtain comments from the public and affected agencies. Comments are encouraged and will be accepted for ''sixty days'' until October 13, 1998.

Written comments and suggestions from the public and affected agencies concerning the proposed collection of information should address one or more of the following four points:

(1) Evaluate whether the proposed collection of information is necessary for the proper performance of the functions of the agency, including whether the information will have practical utility;

(2) Evaluate the accuracy of the agencies estimate of the burden of the proposed collection of information, including the validity of the methodology and assumptions used;

(3) Enhance the quality, utility, and clarity of the information to be collected; and

(4) Minimize the burden of the collection of information on those who are to respond, including through the use of appropriate automated, electronic, mechanical, or other technological collection techniques or other forms of information technology, e.g., permitting electronic submission of responses.

Overview of this information collection:

(1) *Type of Information Collection:* Extension of a currently approved collection.

(2) *Title of the Form/Collection:* Application for Waiver of Grounds of Excludability.

(3) *Agency form number, if any, and the applicable component of the Department of Justice sponsoring the collection:* Form I–690. Adjudication Division, Immigration and Naturalization Service.

(4) *Affected public who will be asked or required to respond, as well as a brief abstract:* Primary: Individuals and households. The information on the application will be used by the Service in considering eligibility for legalization under sections 210 and 245A of the Immigration and Nationality Act.

(5) *An estimate of the total number of respondents and the amount of time estimated for an average respondent to respond:* 52,000 responses at 15 minutes (.25) per response.

(6) *An estimate of the total public burden (in hours) associated with the collection:* 13,000 annual burden hours.

If you have additional comments, suggestions, or need a copy of the proposed information collection instrument with instructions, or additional information, please contact Richard A. Sloan 202–514–3291, Director, Policy Directives and Instructions Branch, Immigration and Naturalization Service, U.S. Department of Justice, Room 5307, 425 I Street, NW., Washington, DC 20536. Additionally, comments and/or suggestions regarding the item(s) contained in this notice, especially regarding the estimated public burden and associated response time may also be directed to Mr. Richard A. Sloan.

If additional information is required contact: Ms Brenda E. Dyer, Deputy Clearance Officer, United States Department of Justice, Information Management and Security Staff, Justice Management Division, Suite 850,

Washington Center, 1001 G Street, NW., Washington, DC 20530.

Dated: August 6, 1998.

Brenda E. Dyer,

Deputy Clearance Officer, United States Department of Justice.

[FR Doc. 98–21697 Filed 8–12–98; 8:45 am]

BILLING CODE 4410–18–M

DEPARTMENT OF JUSTICE

Office of Justice Programs

[OJP(OJP)–1193]

RIN 1121–ZB29

Corrections Program Office; Solicitation for Violent Offender Incarceration/Truth-in-Sentencing Incentive Program Technical Assistance and Training

AGENCY: Office of Justice Programs, Corrections Program Office, Justice.

ACTION: To solicit applications for an organization(s) to develop and deliver training and/or provide technical assistance related to the implementation, administration, or impact of the Violent Offender Incarceration and Truth-in-Sentencing Incentive Program (VOI/TIS), which was authorized by the Violent Crime Control and Law Enforcement Act of 1994, as amended.

SUMMARY: The Office of Justice Programs, Corrections Program Office (CPO) is soliciting proposals to establish a VOI/TIS Training and Technical Assistance Program. Applicants may apply for funding to perform functions described under Component 1: Training Curriculum Development and Delivery, Component 2: Technical Assistance, or both. Applicants may also apply for funding to implement the training and/or technical assistance program in one or a limited number of the defined topic areas. Eligible applicants include public, private non-profit, and for-profit organizations (for-profit organizations must waive their profit) that have an understanding of sentencing and corrections related issues and experience developing and delivering training and/or providing technical assistance to State and local agencies.

Component 1: Development and Delivery of Training. CPO plans to expand its training offerings to include a broader range of topics related to the VOI/TIS program. The applicant will be expected to develop a curriculum for each topic and to deliver training to State and tribal policy makers and adult and juvenile correctional agencies. Some of the training will be provided onsite at a location provided by the requesting agency and will be tailored to the needs of that agency, while other programs will be provided on a regional basis or in a central location. The applicant may apply to develop training on all, one, or several of the following topics:

- Managing long-term offenders
- Managing violent offenders
- Managing the supermax facility
- Staffing issues related to such issues as managing crowded facilities, more violent offenders, and/or inmates with very long or life sentences
- Managing prison climates (race/ethnicity, staff sensitivity, etc.)
- Effective use of needs and risk assessments
- Implementing drug testing, sanctions, and treatment programs
- Reducing the flow of drugs and other contraband into correctional facilities
- Cognitive restructuring
- Cross-discipline team building
- Relapse prevention
- Case management
- Treating offenders with co-occurring disorders
- Transition planning and aftercare to assist inmates with reintegration into the community
- Health issues and geriatric inmates
- Addressing victims rights and related issues in corrections
- Management of violent youth tried as adults
- Management of female populations
- Developing and managing RFPs, contracts, and monitoring systems related to private prisons
- Using data to make management and program decisions
- Tribal justice/corrections

Component 2: Technical Assistance. Assistance will be made available, under this cooperative agreement, to State and tribal policy makers and representatives from adult and juvenile corrections agencies to assist them in addressing issues related to the following topics:

- Sentencing reform
- Offender management
- Facility design, space management, and overcrowding
- Budgetary implications of the VOI/TIS program
- Geriatric prisoners and prisoners with medical conditions
- Crime victims' rights
- Privatization
- Drug control, testing, sanctions, and treatment
- Tribal justice and corrections

DATES: Applications must be received by the Corrections Program Office no later than close of business on September 15, 1998.

ADDRESS: Corrections Program Office, 810 7th Street, NW, Washington, DC 20531.

FOR FURTHER INFORMATION OR TO OBTAIN A COPY OF THE SOLICITATION: Log into the CPO Website at http://www.ojp.usdoj.gov/cpo or contact Donna Bownes, Chief, Technical Assistance and Conference Branch, Corrections Program Office, at (800) 848–6325 extension 69618.

SUPPLEMENTARY INFORMATION:

Authority

This action is authorized under the Violent Crime Control and Law Enforcement Act of 1994, as amended, 42 U.S.C 13701–9 and 42 U.S.C. 13911.

Background.

The Corrections Program Office (CPO) is responsible for administration of the following corrections-related grant programs authorized by the Violent Crime Control and Law Enforcement Act of 1994, as amended:

- Violent Offender Incarceration and Truth-in-Sentencing Incentive Program (VOI/TIS)

—Formula Grants

—Discretionary Grants to Build Jail Facilities on Tribal Lands

- Residential Substance Abuse Treatment for State Prisoners
- Prevention, Diagnosis, and Treatment of Tuberculosis in Correctional Institutions

The solicitation addresses training and technical assistance for the Violent Offender Incarceration and Truth-in-Sentencing Incentive Program (VOI/TIS). It describes these programs, outlines the scope of work and tasks to be performed, describes the administrative and application requirements, and provides the forms needed to prepare an application. One or several awards totaling up to $2.4 million ($1.4 million for the training component and $1 million for technical assistance component) will be issued as a cooperative agreement. The duration will be for one year, with supplemental awards made annually, or as needed, for up to a total of four additional years, based on the recipient's performance, program needs, and the availability of funds. The recipient will be expected to work in close partnership with CPO and other Department of Justice personnel to define and address the needs for assistance by State and local jurisdictions.

Dated: August 7, 1998.

Laurie Robinson,

Assistant Attorney General.

[FR Doc. 98–21732 Filed 8–12–98; 8:45 am]

BILLING CODE 4410–18–P

DEPARTMENT OF LABOR

Occupational Safety and Health Administration

[Docket No. ICR–98–34]

Presence Sensing Device Initiation (PSDI) (29 CFR 1910.217(h); Information Collection Requirements

ACTION: Notice; Opportunity for Public Comment.

SUMMARY: The Department of Labor, as part of its continuing effort to reduce paperwork and respondent burden, conducts a preclearance consultation program to provide the general public and Federal agencies with an opportunity to comment on proposed and/or continuing collections of information in accordance with the Paperwork Reduction Act of 1995 (PRA–95) (44 U.S.C. 3506(c)(2)(A)). This program helps to ensure that requested data can be provided in the desired format, reporting burden (time and financial resources) is minimized, collection instruments are clearly understood, and impact of collection requirements on respondents can be properly assessed. Currently, the Occupational Safety and Health Administration (OSHA) is soliciting comments concerning the proposed extension of the information collection requirements contained in the standard on Presence Sensing Device Initiation (29 CFR 1910.217(h)). The Agency is particularly interested in comments which:

- evaluate whether the proposed collection of information is necessary for the proper performance of the functions of the Agency, including whether the information will have practical use;
- evaluate the accuracy of the Agency's estimate of the burden of the proposed collection of information, including the validity of the methodology and assumptions used;
- enhance the quality, utility, and clarity of the information to be collected; and
- minimize the burden of the collection of information on those who are to respond, including through the use of appropriate automated, electronic, mechanical, or other technological collection techniques or other forms of information technology, e.g., permitting electronic submissions of responses.

DATES: Written comments must be submitted on or before October 13, 1998.

ADDRESSES: Comments are to be submitted to the Docket Office, Docket No. ICR–98–34, Occupational Safety and Health Administration, U.S. Department of Labor, Room N–2625, 200 Constitution Avenue, N.W., Washington, D.C. 20210. Telephone: (202) 219–7894. Written comments limited to 10 pages or less in length may also be transmitted by facsimile to (202) 219–5046.

FOR FURTHER INFORMATION CONTACT: Theda Kenney, Directorate of Safety Standards Programs, Occupational Safety and Health Administration, U.S. Department of Labor, Room N–3605, 200 Constitution Avenue, N.W., Washington, D.C. 20210, telephone: (202) 219–8061. A copy of the referenced information collection request is available for inspection and copying in the Docket Office and will be mailed to persons who request copies by telephoning Theda Kenney at (202) 219–8061, extension 100, or Barbara Bielaski at (202) 219–8076, extension 142. For electronic copies of the Information Collection Request on Presence Sensing Device Initiation (29 CFR 1910.217(h)), contact OSHA's WebPage on the Internet at http://www.osha.gov and click on ''Regulations and Compliance.''

SUPPLEMENTARY INFORMATION

I. Background

The Occupational Safety and Health Act of 1970 (the Act) authorizes the promulgation of such health and safety stndards as are necessary or appropriate to provide safe or healthful employment and places of employment. The statute specifically authorizes information collection by employers as necessary or appropriate for the enforcement of the Act or for developing information regarding the causes and prevention of occupational injuries, illnesses, and accidents.

The collections of information contained in PSDI are considered essential for ensuring the safety of employees using presence sensing devices. The requirement for affixing test rod instructions label to the presence sensing device—1910.217(h)(10)(i)—enhances the proper and essential device testing. Because operator safety depends on the PSDI safety system, conforming with the equipment testing and checking requirements is absolutely essential for worker safety.

The requirements for certification/validation—1910.217(h)(11)(i) through (vi), (13), and Appendices A and C—ensure that the design, installation, and ongoing maintenance of the safety system is objectively evaluated for conformance with all applicable requirements of the section. The section further requires notification of unplanned incidents such as component failures and accidents which could impair the continuing safety of the system. For employees, employers, OSHA compliance and consultation personnel, insurance authorities, and others involved to be able to recognize easily that the system meets OSHA standards, the press must be labeled to affirm validation/certification. Submitting copies of accident reports to the validation organization is necessary to assure that the validation organization will have knowledge of field experience in this mode of press operation and will be able to incorporate any lessons learned from the accidents into the certification/validation program provisions.

Because this rule permits a mode of operation which previously was prohibited, OSHA believes it is especially essential to verify that this method does not compromise worker safety. The certification/validation program provides a method to ensure that the press and related equipment are properly arranged and that the installation does not become degraded over time. It should be noted that although OSHA uses the term ''certification'' for this process, it should not be confused with the use of the word as addressed in the OMB implementing regulations for the Paperwork Reduction Act, to reflect a minimal information collection method. The word ''certification'' in this rulemaking is based on the American National Standard ANSI Z3l.1. 1–1987, and is nationally recognized as describing a broad, comprehensive, well-defined program for ensuring product or material conformance with established standards.

II. Current Actions

This notice requests public comment on OSHA's burden hour estimates before OSHA seeks Office of Management and Budget (OMB) approval of the information collection requirements contained in the Presence Sensing Device Initiation (PSDI) standard.

OSHA has calculated the burden for this collection of information at 30,615 burden hours. OSHA believes this amount may be even lower because many employers do not use PSDI. In

fact, many employers have not incurred any paperwork burden to comply with the standard because they have not elected to use PSDI features on their power presses. OSHA is requesting the appropriate approval from OMB in the event an employer may wish to use a PSDI, which will trigger the collection of information requirements.

Type of Review: Extension of a Currently Approved Collection.

Agency: U.S. Department of Labor, Occupational Safety and Health Administration.

Title: Presence Sensing Device Initiation (29 CFR 1910.217(h)).

OMB Number: 1218–0143.

Agency Number: Docket Number ICR–98–34.

Affected Public: Business or other for-profit; Not for profit institutions; Federal Government; State, local or tribal Government.

Number of Respondents: 2,238.

Frequency: Varies (Initially, Yearly, On Occasion).

Average Time per Response: Varies from two minutes (.02 hr.) to 4 hours.

Estimated Total Burden Hours: 30,615.

Total Annualized Capital/Startup Costs: $0.

Comments submitted in response to this notice will be summarized and included in the request for Office of Management and Budget (OMB) approval of the information collection request. The comments will become a matter of public record.

Signed at Washington, DC, this 5th day of August 1998.

[FR Doc. 98–21784 Filed 8–12–98; 8:45 am]

BILLING CODE 4510–26–M

DEPARTMENT OF LABOR

Occupational Safety and Health Administration

[Docket No. ICR–98–32]

Control of Hazardous Energy Sources (Lockout/Tagout) (29 CFR 1910.147); Information Collection Requirements

ACTION: Notice; Opportunity for Public Comment.

SUMMARY: The Department of Labor, as part of its continuing effort to reduce paperwork and respondent burden, conducts a preclearance consultation program to provide the general public and Federal agencies with an opportunity to comment on proposed and/or continuing collections of information in accordance with the Paperwork Reduction Act of 1995 (PRA–95) (44 U.S.C. 3506(c)(2)(A)). This program helps to ensure that requested data can be provided in the desired format, reporting burden (time and financial resources) is minimized, collection instruments are clearly understood, and impact of collection requirements on respondents can be properly assessed. Currently, the Occupational Safety and Health Administration (OSHA) is soliciting comments concerning the proposed extension of the information collection requirements contained in the standard on the Control of Hazardous Energy Sources (Lockout/Tagout) (29 CFR 1910.147). The Agency is particularly interested in comments that:

- evaluate whether the proposed collection of information is necessary for the proper performance of the functions of the Agency, including whether the information will have practical utility;
- evaluate the accuracy of the Agency's estimate of the burden of the proposed collection of information, including the validity of the methodology and assumptions used;
- enhance the quality, utility, and clarity of the information to be collected; and
- minimize the burden of the collection of information on those who are to respond, including through the use of appropriate automated, electronic, mechanical, or other technological collection techniques or other forms of information technology, e.g., permitting electronic submissions of responses.

DATES: Written comments must be submitted on or before October 13, 1998.

ADDRESSES: Comments are to be submitted to the Docket Office, Docket No. ICR–98–32, Occupational Safety and Health Administration, U.S. Department of Labor, Room N–2625, 200 Constitution Avenue, NW., Washington, DC 20210. Telephone: (202) 219–7894. Written comments limited to 10 pages or less in length may also be transmitted by facsimile to (202) 219–5046.

FOR FURTHER INFORMATION CONTACT: Theda Kenney, Directorate of Safety Standards Programs, Occupational Safety and Health Administration, U.S. Department of Labor, Room N–3605, 200 Constitution Avenue, NW., Washington, DC 20210, telephone: (202) 219–8061. A copy of the referenced information collection request is available for inspection and copying in the Docket Office and will be mailed to persons who request copies by telephoning Theda Kenney at (202) 219–8061, extension 100, or Barbara Bielaski at (202) 219–8076, extension 142. For electronic copies of the Information Collection Request on the Control of Hazardous Energy (Lockout/Tagout), contact OSHA's WebPage on the Internet at http://www.osha.gov and click on ''Regulations and Compliance.''

SUPPLEMENTARY INFORMATION:

I. Background

The Occupational Safety and Health Act of 1970 (the Act) authorizes the promulgation of such health and safety standards as are necessary or appropriate to provide safe or healthful employment and places of employment. The statute specifically authorizes information collection by employers as necessary or appropriate for the enforcement of the Act or for developing information regarding the causes and prevention of occupational injuries, illnesses, and accidents.

The collections of information contained in the standard on the Control of Hazardous Energy Sources (Lockout/Tagout) are needed to reduce injuries and deaths in the workplace that occur when employees are engaged in maintenance, repair, and other service related activities requiring the control of potentially hazardous energy. The employer will use the information in the procedures he or she develops to provide employees with a clear understanding of uniform and safe methods for the application and removal of energy control measures involving work on machines or equipment, thereby, reducing accident probability. In addition, the information will be used by employers to enable them to pinpoint methods and operations currently in use that may require additional attention. The failure to provide and maintain access to this information will significantly impair OSHA's effort to control or reduce injuries and fatalities in the workplace that are associated with these activities and conditions.

II. Current Actions

This notice requests public comment on OSHA's burden hour estimates prior to OSHA seeking Office of Management and Budget (OMB) approval of the information collection requirements contained in the Control of Hazardous Energy Sources (Lockout/Tagout) standard.

Type of Review: Extension of a Currently Approved Collection.

Agency: U.S. Department of Labor, Occupational Safety and Health Administration.

Title: Control of Hazardous Energy Sources (Lockout/Tagout) (29 CFR 1910.147).

OMB Number: 1218–0150.

Agency Number: Docket Number ICR–98–32.

Affected Public: Business or other for-profit; Not for-profit institutions; Federal Government; State, local or tribal Government.

Number of Respondents: 462,340.

Frequency: Varies (Initially, Yearly, On Occasion).

Average Time per Response: Varies from .15 seconds (.004 hr.) to 2.5 hours.

Estimated Total Burden Hours: 818,098.

Total Annualized Capital/Startup Costs: $0.

Comments submitted in response to this notice will be summarized and included in the request for Office of Management and Budget (OMB) approval of the information collection request. The comments will become a matter of public record.

Signed at Washington, D.C., this 5th day of August 1998.

Charles N. Jeffress,

Assistant Secretary of Labor.

[FR Doc. 98–21785 Filed 8–12–98; 8:45 am]

BILLING CODE 4510–26–M

DEPARTMENT OF LABOR

Occupational Safety and Health Administration

Maritime Advisory Committee for Occupational Safety and Health: Appointment of Members

AGENCY: Occupational Safety and Health Administration (OSHA), Labor.

ACTION: Notice of appointment of members to the Maritime Advisory Committee for Occupational Safety and Health (MACOSH).

SUMMARY: The Secretary of Labor has established an advisory committee to advise the Assistant Secretary for Occupational Safety and Health on issues relating to occupational safety and health programs, policies, and standards in the maritime industries in the United States. The committee will provide collective expertise not otherwise available to the Secretary to address the complex and sensitive issues involved. Committee members have been appointed from government agencies, shipbuilding, longshoring, and labor and professional associations.

ADDRESSES: Written comments in response to this notice should be sent to the following address: U.S. Department of Labor, OSHA, Office of Maritime Standards, Room N–3621, 200 Constitution Avenue, NW., Washington, DC 20120. Phone: (202) 219–7234; Fax: (202) 219–7477.

FOR FURTHER INFORMATION CONTACT: Larry Liberatore, Office of Maritime Standards, OSHA, (202) 219–7234.

SUPPLEMENTARY INFORMATION: On February 26, 1998, OSHA announced its intention to renew the charter of MACOSH and request nominations of qualified persons to serve on the committee (63 FR 9861). MACOSH is intended to address the concerns of the entire maritime community, focussing on the shipyard and marine cargo handling industries.

MACOSH will assist the Secretary in complying with the President's initiative to make the U.S. shipyard industry competitive in the worldwide community, while maintaining the safety of workers. MACOSH will focus on more effective enforcement, improved training and outreach programs, and streamlined rulemaking techniques. In addition, MACOSH will address controversial issues, including those with international implications, that impact the U.S. longshoring and shipyard communities.

Committee Members

MACOSH is composed of 15 members who have been selected to represent the diverse interest of the maritime community. Section 7(b) of the OSH Act requires the following: at least one member who is designee of the Secretary of Health and Human Services; at least one member who represents a State safety and health agency; and an equal number of representatives of employees and employers. Other members include representatives from professional and other governmental organizations with specific maritime responsibilities.

The 15 members of MACOSH are as follows:

Employee Representatives

Al Cernadas, International Longshoremen's Association
Michael Flynn, International Association of Machinists and Aerospace Workers
Douglas Getchell, International Longshore and Warehouse Union, Local 12
William (Chico) McGill, International Brotherhood of Electrical Workers, Local 733
Robert M. Scott, Shipwrights Local 1184

Employer Representatives

Katherine R. Chumley, Atlantic Marine, Inc.
John Faulk, Stevedoring Services of America
Chester Matthews, Bath Iron Works
Steve Morris, American Commercial Marine Service
Captain John McNeill, Marine Terminals Corporation

Government, Public and Professional Organizations

Iona Evans, U.S. Department of Navy, Naval Sea Systems Command
Lt. Julie Gahn, U.S. Coast Guard, Office of Operating and Environmental Standards
Laurence Reed, National Institute for Occupational Safety and Health (NIOSH)
Peter Schmidt, Washington State Department of Labor and Industry
James Thornton, American Industrial Hygiene Association

Signed at Washington, DC this 7th day of August, 1998.

Charles N. Jeffress,

Assistant Secretary of Labor.

[FR Doc. 98–21786 Filed 8–12–98; 8:45 am]

BILLING CODE 4510–26–M

LIBRARY OF CONGRESS

[LOC Docket No. 98–3]

Library of Congress/Ameritech National Digital Library Competition

ACTION: Notice of competition.

SUMMARY: This Notice of Competition announces that the Library of Congress, with a gift from Ameritech, is sponsoring a competition to enable public, research, and academic libraries, museums, historical societies, and archival institutions (except federal institutions) to create digital collections of primary resources for distribution on the Internet. In the 1998/99 competition year, applications will be limited to collections of textual and graphic materials that illuminate the period 1492–1920 and that complement and enhance the American Memory collections in the National Digital Library. Awards will be made of up to $75,000 to individual institutions and up to $150,000 to eligible consortia for projects that can be accomplished in twelve to eighteen months.

DATES: Applications must be postmarked by November 2, 1998.

ADDRESSES: LC/Ameritech NDL Competition, Library of Congress, 101 Independence Avenue, SE, Washington, D.C. 20540–1340.

FOR FURTHER INFORMATION CONTACT: Ariel Rosenblum, Tel: (202) 707–1087; Fax (202) 252–3249; Email: lc__ameritech@loc.gov; Http://memory.loc.gov/ammem/award/.

SUPPLEMENTARY INFORMATION: The National Digital Library is envisioned as

a distributed collection of converted library materials and digital originals to which many American institutions will contribute. The Library of Congress' contribution to the World Wide Web-based virtual library is called American Memory and is created by the Library's National Digital Library Program. Non-profit cultural repositories in the United States with collections of primary resources that are significant for education and research in United States history and culture are eligible to apply to the LC/Ameritech Competition. Collections that are digitized with awards from this competition must be distributable on the Internet.

Applications from Association of Research Libraries (ARL) and non-ARL institutions will be evaluated separately, in order to encourage applications from a variety of institutions. In the final selection among meritorious projects, consideration will be given to the historical subjects emphasized in the guidelines and to the size, type, and geographical location of the applicant institution. The evaluation criteria is as follows:

- The significance of the collection's content for understanding United States history and culture, as well as its breadth of interest and utility to students and the general public.
- The availability and usability of aids to intellectual access that can be integrated into the American Memory resource.
- The technical and administrative viability of the project's plan of work in relation to the scope of the project.

Applications will be evaluated by scholars, educators, librarians, archivists, administrators, and technical specialists external to the Library of Congress. Evaluators will be convened by George Farr, Director of the Division of Preservation and Access of the National Endowment for the Humanities and by Deanna Marcum, President of the Council on Library and Information Resources.

Only costs directly associated with digital conversion may be included in the request. Equipment may not be purchased with award funds. The 1998/99 Guidelines and Application Instructions are available online to view or download from the Library of Congress/Ameritech National Digital Library Competition Web page (http://memory.loc.gov/ammem/award).

Dated: August 3, 1998.

James H. Billington,

Librarian of Congress.

[FR Doc. 98–21723 Filed 8–12–98; 8:45 am]

BILLING CODE 1410–10–P

LIBRARY OF CONGRESS

Copyright Office

[Docket No. 98–2B]

Fees

AGENCY: Copyright Office, Library of Congress.

ACTION: Notice of proposed fee increase and public hearing.

SUMMARY: The Copyright Office issues this notice to inform the public that the Office will hold a public hearing in the course of a rulemaking proceeding during which the Office proposes to increase the fees set forth in 17 U.S.C. 708(a). The proposed fees would recover a significant part of the cost to the Office of registering claims, including supplementary and renewal claims, of recording documents, of issuing receipts for deposits, of issuing additional certificates, and of making and reporting searches.

DATES: A public hearing will be held on Thursday, October 1, 1998, beginning at 10:00 a.m. in Dining Room A, 6th Floor, (yellow core) of the James Madison Memorial Building, of the Library of Congress, First Street and Independence Avenue, S.E., Washington, D.C. 20559–6000. Anyone desiring to present oral testimony should notify the Copyright Office by no later than September 10, 1998. Written comments are invited from both those who wish to testify and those who plan only to file initial or reply comments. All initial written comments must be filed on or before September 18, 1998. All reply comments must be filed on or before October 15, 1998.

ADDRESSES: Those who wish to present oral testimony should notify Marylyn Martin, Office Manager, Office of the General Counsel by fax (202) 707–8366 or by telephone (202) 707–8380. Interested parties should submit an original and fifteen copies of written comments. If delivered BY MAIL, address to Office of the General Counsel, GC/I&R, P.O. Box 70400, Southwest Station, Washington, D.C. 20024. If delivered BY HAND, copies should be brought to: Office of the General Counsel, Copyright Office, James Madison Memorial Building, Room LM–403, First and Independence Avenue, S.E., Washington, D.C. 20559–6000.

FOR FURTHER INFORMATION CONTACT: Marilyn J. Kretsinger, Assistant General Counsel, Copyright GC/I&R, P.O. Box 70400, Southwest Station, Washington, D.C. 20024. Telephone: (202) 707–8380; Telefax: (202) 707–8366.

SUPPLEMENTARY INFORMATION:

I. Background

Benefits of Registration and Recordation

Copyright is secured automatically when the work is created, that is, fixed in a copy or phonorecord for the first time. This protection generally lasts for the author's life plus an additional 50 years after the author's death, or if the work is made for hire, for a term of 75 years from publication or 100 years from creation, whichever is shorter. The rights granted to authors are broad and protection is worldwide because of multilateral and bilateral treaties.

Registration of claims to copyright and recordation of transfers of copyright ownership are optional.[1] However, there are certain benefits. Registration establishes a public record of the copyright claim; this record includes the name of the author, the name and address of the claimant (owner), the type of authorship and the scope of the claim, and the date and nation of first publication, if applicable. A bibliographic entry prepared by the Cataloging Division is available online through the Copyright Office's website.

Registration made within three months after publication of the work or before an infringement of the work will entitle the copyright claimant to statutory damages and the possibility of recovering attorney's fees. Statutory damages are an important remedy because it may be difficult to prove the extent of the economic injury that the infringement has caused. Statutory damages allow the court to consider what is just compensation rather than actual damages. With respect to attorney's fees, timely registration makes this remedy a possibility. A court is not obliged to award reasonable attorney's fees and is authorized to do so only to the prevailing party.

If a work is registered before or within five years of publication, registration will establish *prima facie* evidence in court of the validity of the copyright and the facts stated in the certificate. Although such evidence is rebuttable, the *prima facie* status is valuable; this is especially true when infringement takes place years after the work was published, when facts are sometimes difficult to ascertain and prove. With respect to the copyrightability of the work, the registration is important. The Office examines a work and issues a

[1] In a recent case, a court found that Federal copyright law takes precedence over state laws having to do with the legal validity of any legally recognizable interest in or share of ownership in copyright. Documents having to do with security interests in copyright may be recorded in the Copyright Office.

certificate only when it determines that the work deposited represents copyrightable authorship and that the other legal and formal requirements of the law have been met. The Office's decisions are accorded great weight by courts; generally, their review of Office determinations is limited to the high standard of ''abuse of discretion,'' meaning that a court will defer to the expertise of the Office unless the registration or refusal to register is considered so arbitrary that the court determines it to constitute an abuse of the Register's discretion.

Additionally, the Copyright Office develops, services, preserves and stores the official records, which include the original application for registration, the deposit copies or phonorecords not selected by the Library for its collections or exchange programs or identifying material submitted in place of actual copies or phonorecords, any correspondence concerning the copyright claim, and an online catalog consisting of bibliographic records. Copies of unpublished works must, by law, be retained for the entire life of the copyright. Published works are retained for the period determined practicable by the Register and the Librarian, which at present is five years from the date of deposit unless the work is a pictorial, graphic, sculptural or architectural work where the retention period is 10 years. This material may be inspected by the public. Copies of records other than deposit materials may be requested and can be certified. With respect to deposit materials, the Office provides certified and uncertified copies of materials within the custody of the Office when certain conditions are met.

With respect to transfers of copyright ownership, although recordation is not mandatory, there are several advantages. For example, recordation can, under certain conditions, establish priorities between conflicting transfers, or between a conflicting transfer and a nonexclusive license. Recordation can provide the advantage of according a document ''constructive notice''—a legal concept meaning that members of the public are deemed to have knowledge of the facts stated in the document; in other words, they cannot claim they were unaware of the document or its contents.

The Office does not attempt to judge the legal sufficiency of a document; it does check to see that certain requirements are met and verifies certain information. Documents accepted for recordation are numbered, imaged, and indexed under the titles and names they contain for the public record. The original document is returned to the sender with a certificate of record bearing the date of recordation and the volume and page number where the document can be located. Information about recorded documents is available on the Office's Website; recorded documents are available for inspection and copies of such documents may be made or requested.

History of Copyright Fees in Relation to Costs of Providing Services

In 1870, Congress centralized registration of copyrights in the Library of Congress. The fee for registering a claim to a copyright was set at fifty cents, an amount sufficient to cover the entire cost of registration at that time. Copyright fees were increased in 1909 and 1928, and the Copyright Office remained self-sufficient until 1942, when, for the first time, revenues fell short of expenditures. Another increase in 1948 brought income above expenditures again, but only for one year. From that time, fee increases were never sufficient to cover all of the Office's operating costs, and the percentage of costs covered by income eroded greatly between legislated fee increases.

In 1965, a fee increase from $4 to $6 brought income from 62% to an estimated 80% of expenses. A 1978 fee increase to $10 brought revenues to about 80% of costs, but by 1989, revenues had again diminished to a new low of 40% of costs. The most recent fee increase, to $20, enacted in 1990 and made effective in 1991, raised income to about 65% of expenditures; the House Judiciary Committee defeated an amendment to increase the fee to $30, which would have achieved full-cost recovery. H. Rep. No. 279, 101st Cong., 1st Sess. 4 (1989).

History of the Fee Structure

The 1990 legislation adjusted all of the copyright fees enumerated in the copyright law and also gave the Copyright Office authority to adjust fees at five-year intervals, based upon the change in the Consumer Price Index. Public Law 101–318, 104 Stat. 287 (1990). Under this authority, in 1994, the Acting Register of Copyrights appointed an internal committee to study costs and recommend revised fees. The committee examined what 17 U.S.C. 708(b) would permit as a statutory fee increase, and comprehensively analyzed the costs to the Office of providing special services. In 1994, the Copyright Office increased fees for special services.[2] As a result of the committee's analysis, the Acting Register concluded that a 1995 increase in statutory fees to the limit permitted under 17 U.S.C. 708(b) would be minimal and would not be cost effective given the administrative costs associated with increasing fees. The Office did not increase fees in 1995 and was unsure what years would be computed in increases to the Consumer Price Index the next time it increased fees; consequently, it sought a clarifying legislative amendment. The current fee proposals resulted from that effort.

The Fee Structure Enacted in 1997

Amendments to the copyright fee structure were made part of the Technical Amendments Act which was enacted on November 13, 1997, Public Law 105–80, 111 Stat. 1529 (1997). Among other things, this Act revised 17 USC 708(b) and set out specific guidelines for the Copyright Office to change the fees specified in the statute. It authorized the Register to adjust fees to recover a greater percentage of the Office's costs of providing services. The main directives of this Act are:

1. The Register shall conduct a study of the costs incurred by the Copyright Office for the registration of claims, the recordation of documents, and the provision of services. This study should also consider the timing of any increase in fees and the authority to use such fees consistent with the budget.
2. On the basis of the study, and subject to congressional approval, the Register is authorized to fix fees at a level not more than that necessary to recover reasonable costs incurred for the services described plus a reasonable adjustment for inflation.
3. The fees should also be fair and equitable and give due consideration to the objectives of the copyright system.
4. The Register must then submit a proposed fee schedule with the accompanying economic analysis to Congress for its approval. The Register may institute the new fees 120-days after the schedule is submitted to Congress unless Congress enacts a law within the 120-day period stating that it does not approve the schedule.

Copyright Office's Response

In the spring of 1997, while Congress was considering the proposed fee legislation that became part of the Technical Amendments Act, the Register conferred with the Director of the Library's Financial Services Directorate (FSD) on how to proceed. Based on this discussion, the Register appointed a group of Copyright Office staff members to conduct a fee study and to recommend appropriate fee changes. With the advice of FSD, the

[2] Special service fees are not at issue here. They were again increased effective July 1, 1998, pursuant to a Notice of Proposed Rulemaking (NOPR) published April 1, 1998. 63 FR 15802 (April 1, 1998), and final rule, 63 FR 29137 (May 28, 1998).

Copyright Office hired two consulting firms, Abacus Technology Corporation (Abacus) and Ron Young, with expertise in cost accounting and federal cost accounting regulations to assist in this effort.

On March 25, 1998, the Office's Fee Analysis Task Group (FEATAG) submitted a report to the Register of Copyrights. The report presented the results of the commissioned economic study and analysis of the costs that the Copyright Office incurs in registering claims, recording documents, and providing related services, and recommended a new schedule of fees.

The core of the economic study and analysis was done by Abacus, a private consulting firm who developed a methodology for determining the Office's full costs and the fees required to recover part or all of the costs.

Abacus documented all of the Copyright Office costs. The Office determined that some costs not related to providing specified registration and related services should not be included in the study. It directed Abacus to exclude all Licensing Division and Copyright Arbitration Royalty Panel (CARP) unit costs since they are paid from other appropriated funds. It also directed Abacus to exclude policy costs, the costs of the Copyright Acquisitions Division, whose primary responsibility is securing copies of works published in the United States that have not been deposited for the Library of Congress' collections, and certain overhead expenses associated with these activities. Policy expenses excluded certain staff from the Office of the General Counsel and the Public Information Office and all Policy and International Affairs staff.

The study used the activity based costing (ABC) methodology approved under the new managerial cost accounting standards as described in Managerial Cost Accounting Standards for the Federal Government, Statement of Federal Financial Accounting Standards, no. 4, published by the Office of Management and Budget, on July 31, 1995. Under this approach, resource costs were assigned to activities, and activities were assigned to specified services. Most Copyright Office activity costs were directly related to fee services. Certain general and administrative costs related to fee services were treated as indirect costs and were allocated proportionately across all fee services.

Based on those cost parameters, Abacus proposed the fees which were presented in its report. Ron Young and Associates reviewed the Abacus report for compliance with the new federal financial accounting standards. FEATAG's final report to the Register made recommendations on the fees based upon Abacus's cost determinations and policy factors such as fairness, equity, and the objectives of the copyright system, with adjustments for elasticity in demand for services. This report is available on the Copyright Office's website via the Internet.[3]

Fee Policy Considerations

In developing its fee recommendations, FEATAG considered several policy issues on fees and fee structures, both from the point of view of equity and fairness and of practicality and potential administrative burden. The Office resolved three of these policy issues as follows:

1. Basic filing fee. Should the basic filing fee be the same for all administrative classes of material, e.g., Class TX (literary works), Class VA (pictorial, graphic, sculptural and architectural works), Class PA, works of the performing arts including but not limited to music, lyrics, choreography, motion pictures and other audiovisual works), Class SR, (sound recordings); and all types of work within a given class, e.g., poems, databases, novels, computer programs, illustrations, sculptures, photographs, feature films, instructional television programs? Or should a distinction be made based on the Office's administrative classification or alternatively on the type of the work?

The Office concluded that for administrative efficiency, generally the fees should be the same for all types and all classes of works. With respect to types of works, in order to institute different fees for types of works within a class, the Office would need to develop separate applications. Additionally, distinguishing different types of works is not always easy. What is a feature film? What is an instructional television program? With respect to administrative classification, many works contain authorship in more than one class, and filers are asked to choose the class representing the preponderance of material. Claims filed correctly but submitted on the wrong application are generally registered without question. The Office does not wish to ''measure'' content to determine whether the correct class was chosen and perhaps to assess a higher fee. Further, it prefers that filers not be influenced by a lower fee to select an inappropriate application form.

2. Published versus unpublished. Should there be different fees for published or unpublished works?

The issue can be looked at from two different perspectives—one argues for a higher fee for unpublished works; the other argues for a higher fee for published works. The first argument is that the cost of processing a claim in an unpublished work is higher than the cost of processing a claim in a published work; additionally, the Office is required to store a copy of the unpublished work for the life of the copyright. In the case of published works, the Office either doesn't store the material because it has been selected by the Library or stores it for a limited number of years. The second argument is that published works have entered the stream of commerce and may be earning royalties or other income. Therefore, at the time of registration, the copyright in a published work arguably is more valuable than the copyright in an unpublished work.

After much discussion, the Office decided that different fees based on the status of the work could not easily be justified; moreover, there would be a considerable administrative burden in such a fee structure. Therefore, the Office decided not to propose different fees based on the publication status of a work.

3. Works made for hire versus independently authored works. Should a greater fee be charged for works made for hire?

There was considerable discussion on whether there was a basis to charge a higher fee for works made for hire. However, again the administrative burden of different fees coupled with some uncertainty concerning the authorship status on the part of many registrants, led us to reject any differentiation.

Discussions of Copyright Objectives and Fairness and Equity

In May of 1998, the Register contacted representatives of interested groups who register claims to offer them the opportunity to meet and discuss the forthcoming fee increases and to voice their membership's initial concerns. A number met with the Register; others submitted comments.

These representatives suggested several alternatives to the fee schedules offered by ABACUS and/or recommended by FEATAG. Various groups representing individual authors told the Office that the fee suggested in the FEATAG report, $45, was too high. They stressed the importance of keeping the registration fee low to keep

[3] The full FEATAG, report may be accessed at http://lcweb.loc.gov/copyright. In addition, both the FEATAG Report and ABACUS Report are available for inspection and copying in our Public Information Office, 101 Independence Avenue, S.E., LM–402, Washington, D.C. 20540 between 8:30 a.m. and 5:00 p.m. Eastern time Monday thru Friday except holidays.

registration affordable. Several representatives cautioned that income from statutory fees should be used only for providing the direct service, e.g. registration, recordation, certification. A few spokespersons indicated that most of their members do not register under the current registration procedures for various reasons and anticipated that higher fees will result in even fewer registrations.

Several representatives suggested that there should be more group registration opportunities to ease the burden and cost of registering. One indicated that a doubling of the current fee would be satisfactory, but only if this group of authors could register a very large number of images for one fee. Other spokespersons questioned why those who register daily newsletters must pay more than those who register daily newspapers under the existing fee schedules.

Other suggestions were that the Office keep basic registration and recordation fees low and seek increased revenues from special services, i.e., raise the fees even more for special handling and other special services, consider volume discounts for quantity registrations, balance an increase in fees with a discount for each registration filed by those with deposit accounts, and provide reduced fees for those who use the electronic registration and deposit system when this is available for users. Another suggested that the Office increase fees for registrations by those who commercially exploit works such as publishers or motion picture companies. Several suggested providing an exemption for small businesses. One representative suggested a ''means test'' to determine the ability of the individual author to pay. Another suggested assessing the fee at a level commensurate with the value of the work.

II. Current Initiatives and Office's Initial Response to These Concerns

Existing Registration Options

The Office wants to keep fees within a reasonable range in order to encourage registration and increase the value of the public record. Consequently, the Office has explored the possibility of providing registration at a lower fee for claims by individual authors.

The Office notes that it already offers two registration options that benefit individual authors who wish to register more than one work.

(1) Unpublished works can be assembled into a collection and registered as a single work under a collective title. The Office examines the claim for copyrightability of the whole and does not identify any works within the collection that may not be independently copyrightable. Only the collection titles are cataloged; individual titles are not cataloged, even when listed on the application. The option does, however, provide an economical means of registering a number of unpublished works.

(2) Contributions to periodicals can be registered on a single application and with a single fee. This option is provided for in section 408(c)(2) of the law; it offers a single registration for works that were first published as contributions to periodicals, including newspapers, within a twelve-month period.

The Office is considering offering another form of group registration for unpublished works by individual authors. This option would permit registration of up to ten unpublished works in one class, listed by title on the form, and each examined for copyrightability by the Copyright Office. Each title would appear on the certificate of registration and be entered into the Catalog of Copyright Entries. The fee would be determined by the number of items in the group, with a minimum fee not less than the fee for a single work.

Special Fee for Daily Newsletters

The Office considered the request to include daily newsletters with daily newspapers instead of with other serials but concluded that daily newsletters should continue to be assessed the same fees as other serials. The Office is not proposing to change the existing fee for serials other than to increase the minimum number of works that can be registered in one group. The special newspaper fee is only available to newspapers who are willing to provide the Library of Congress with a microfilm deposit that meets certain archival standards; the cost of preparing such copies generally is between $1000 and $1200 per year. Moreover, this deposit exceeds the deposit requirements set forth in the law.

Offering Additional Group Registrations

The Office included group fees in this NOPR, although they are special services rather than statutory ones in order to propose increases to all filing fees at the same time. It is currently considering additional group registration options. When it is ready to publish these new group options, the Office will need to amend its regulations. At that time, these options and their accompanying fees will be addressed in a separate rulemaking proceeding.

Assessing a Short Fee Service Charge

The Office notes that it increased certain fees for special services in an earlier rulemaking, including proposing for the first time a charge of $20.00 for submitting a fee that is insufficient to cover the requested service after the new fees go into effect. This short fee will only be assessed for fees that go into effect in 1999 and will only be assessed for insufficient payments made beginning six months after from the effective date of the new fees.

Reduced Rate for Individual Authors

In order to respond to the plea on behalf of individual authors to keep registration within reach financially, the Office proposes an alternate schedule of fees including a reduced fee for unpublished single works, not including collections registered under a single title, of which the author is an individual (not an employer for hire) and where the author is claiming copyright. The reduced fee, proposed at $35 for individuals, would negatively affect the Office's income.

To determine the impact on the Copyright Office's income the Office reviewed a number of registrations completed in 1997 in each of the unpublished series TXu, VAu, PAu, and SRu to see what percentage would have qualified for the reduced fee had it been available. Applying the percentages to the projected receipts for Fiscal Year 2000, the Office would forfeit $1.4 million in income by adopting the reduced fee for individual authors. This loss of income would be much greater if the lower fee for individuals were applied to collections, to published works, or to unpublished works by joint individual authors all of whom were claiming copyright. The Office is, therefore, not proposing to offer the reduced fee for these categories.

The second fee schedule shows the adjustment that would have to be made in fees for other claims to make up for the income lost through this accommodation. Those claims in Classes TX, VA, PA, and SR that did not qualify for the reduced fee would be subject to a higher fee of $50. The Office proposes keeping the fee for serials at $45. The lower fee for serials is justified by the lower cost to process them.

III. Proposed New Statutory and Filing Fees

Based on the discussions thus far and the analysis done by the Office, the Office is proposing two different fee schedules. Schedule I contains the fees suggested by the FEATAG report, rounded to the nearest $5. Assessment

of fees at the level proposed in Schedule I would enable the Office to recover a significant portion of the costs of providing these services and thus fulfill its congressional mandate. Schedule II includes a reduced fee for individual authors who meet the criteria set out above and adjusts other fees accordingly to recover the revenue lost to the Office by this adjustment.

The Office is not proposing any changes at this time for Recordation of Notices of Intent to Enforce copyrights restored under the Uruguay Round Amendments Act and group registration of serials.

SCHEDULE I

Statutory service with no special rate for individual authors	Proposed fee
Registration of a claim in literary materials other than serials (Form TX)	$45.
Registration of a claim in a serial (Form SE)	45.
Registration of a claim in a work of the performing arts, including sound recordings and audiovisual works (Form PA).	45.
Registration of a claim in a work of the visual arts (Form VA)	45.
Registration of a claim in a group of contributions to periodicals (GRCP), including group renewals	3/contribution-45 minimum.
Registration of a renewal claim (Form RE)	
• Claim without addendum	45.
• Claim with addendum	60.
Registration of a correction or supplement to a claim (Form CA)	65.
Registration of a claim in a group of serials, including daily newsletters, (Form SE/Group)	10/issue-45 minimum.
Registration of a claim in a group of daily newspapers (Form G/DN)	55.
Registration of a restored copyright (Form GATT)	45.
Registration of a claim in a group of restored works (Form GATT/Group)	10/claim-45 minimum.
Providing an additional certificate of registration	25.
Any other certification	65.
Search—report prepared from official records (per hour)	65.
Search—locating records (per hour)	65.
Recordation of document (single title)	50.
• Additional titles (per group of 10 titles)	15.
Recordation of Notices of Intent to Enforce (NIEs) (single title)	30
• Additional titles	1.

SCHEDULE II

Statutory service with a special rate for individual authors	Proposed fees
Registration of a claim in a single work submitted by a qualified individual author in classes TX, VA, PA, and SR	$35.
Registration of a claim in literary materials other than serials (Form TX)	50.
Registration of a claim in a serial (Form SE)	45.
Registration of a claim in a work of the performing arts, including sound recordings and audiovisual works (Form PA)	50.
Registration of a claim in a work of the visual arts (Form VA)	50.
Registration of a claim in a group of contributions to periodicals (GRCP), including group renewals of contributions to periodicals.	As in Schedule I.
Registration to a renewal claim (Form RE)	
• Claim without addendum	45
• Claim with addendum	60
Registration of a correction or supplement to a claim (Form CA)	As in Schedule I.
Registration of a group of serials, including daily newsletters (Form SE/Group)	Do.
Registration of a group of daily newspapers (Form G/DN)	Do.
Registration of a restored copyright (Form GATT)	Do.
Registration of a group of restored copyrights (Form GATT/Group)	Do.
Providing an additional certificate of registration	Do.
Any other certification	Do.
Search—report prepared from official records (per hour)	Do.
Search—locating records (per hour)	Do.
Recordation of a document (single title)	Do.
• Additional titles (per group of 10 titles)	Do.
Recordation of Notices of Intent (NIEs) (single title)	Do.
• Additional titles	Do.

IV. Request for Comments

The Office seeks comments on the suggestions made by the parties and the fee schedules proposed above. The Office also seeks comments on the following specific questions:

1. Do you agree that individual authors of unpublished works should pay a lower registration fee? If so, why? If not, why not?

2. Are there other distinctions that the Office should make in assessing fees?

• Should a corporation with a certain net worth pay more than others? Should there be a small business exemption? If so, how should this be determined?

• Should a distinction be made between published and unpublished works in setting registration fees? If so, is this equitable given the fact that many commercially valuable works, including computer programs, databases, and motion pictures, are often registered in unpublished form?

• Should there be a higher fee for works made for hire?

3. The Office did not suggest different fees for different classes or types of works. Instead for administrative efficiency and cost concerns, it suggested the same fee for all classes and types of works (except serials). Do you agree with this decision? If not, how would you recommend structuring the fees and why?

4. Are there other practical alternatives for fee increases that will allow the Office to recover its reasonable costs?

5. Based on the fees proposed in Schedule I, who is unlikely to register? Based on the fees proposed in Schedule II, who is unlikely to register?

6. In assessing fees for the registration and related services detailed in the schedules set out above, the Office concluded that certain costs should be recovered through appropriations. It also distinguished between direct and indirect costs in assessing what costs should be recovered. Do you agree with the Office's exclusion of such costs in assessing fees for registration and related services? If not, why not?

7. Are any of the specified fees too high? If so, why?

Dated: August 6, 1998.

Marybeth Peters,

Register of Copyrights.

Approved By:

James H. Billington,

The Librarian of Congress.

[FR Doc. 98–21738 Filed 8–12–98; 8:45 am]

BILLING CODE 1410–30–P

NUCLEAR REGULATORY COMMISSION

[IA 98–024]

Leland H. Brooks; Order Prohibiting Involvement in NRC-Licensed Activities (Effective Immediately)

I

Leland H. Brooks was an employee of Westinghouse a contractor to Pacific Gas & Electric Company (PG&E) at the Diablo Canyon Nuclear Power Plant (Diablo Canyon). PG&E holds NRC license Nos. DPR–80 and DPR–82, issued by the Nuclear Regulatory Commission (NRC or Commission) pursuant to 10 CFR Part 50. The licenses authorize the operation of Units 1 and 2 of the Diablo Canyon facility in accordance with the conditions specified therein.

II

On April 16, 1997, Mr. Brooks, a millwright, was granted temporary unescorted access to Diablo Canyon as an employee of Westinghouse. PG&E terminated Mr. Brooks access to Diablo Canyon on May 21, 1997, upon completion of the work Mr. Brooks was hired to perform. PG&E's decision to grant Mr. Brooks unescorted access was based on the information Mr. Brooks provided in a signed Personnel Access Questionnaire dated April 7, 1997, including information Mr. Brooks provided about his arrest record. In addition to requesting information about any arrests, this questionnaire clearly stated, ''For all arrests and/or convictions that occurred in the last five years, a copy of your court orders must be provided with this application.'' Mr. Brooks wrote ''None'' next to this statement. On July 22, 1997, approximately two months after Mr. Brooks' access to Diablo Canyon had been terminated, PG&E received information from the Federal Bureau of Investigation (FBI) which indicated that Mr. Brooks had failed to inform PG&E of several arrests and convictions, including a 1995 felony charge which was still pending. PG&E conducted an investigation and determined that Mr. Brooks knowingly withheld and/or falsified information on the Personnel Access Questionnaire. On August 6, 1997, PG&E issued Mr. Brooks a letter informing Mr. Brooks of this conclusion and denying Mr. Brooks future access to Diablo Canyon.

The deliberately false information that Mr. Brooks provided to the licensee, as well as the failure to provide copies of the required court records, were violations of 10 CFR 50.5, ''Deliberate Misconduct.'' Specifically, Section 50.5(a)(2) provides, in part, that an employee of a contractor to a licensee may not deliberately submit to a licensee information that the person submitting the information knows to be incomplete or inaccurate in some respect material to the NRC. The false and incomplete information that Mr. Brooks submitted was material because PG&E is required to consider criminal history in making a determination as to whether to grant unescorted access in accordance with 10 CFR 73.56.

On April 27, 1998, the NRC issued a letter to Mr. Brooks, informing Mr. Brooks that the NRC was considering escalated enforcement action against him and providing Mr. Brooks a choice of requesting a predecisional enforcement conference or submitting a written response. Although Mr. Brooks telephoned the NRC regional office and stated that he didn't recall ever working at the Diablo Canyon nuclear power plant, he has not submitted a written response or requested a predecisional enforcement conference, and he has not provided any evidence to support his claim. The NRC's letter to Mr. Brooks informed him that in the absence of a response, we would proceed with enforcement action.

Based on the above, the NRC has concluded that Mr. Brooks engaged in deliberate misconduct by deliberately omitting criminal history information when completing a Personnel Access Questionnaire to gain unescorted access to the Diablo Canyon nuclear power plants. The NRC must be able to rely on employees of licensees and their contractors to comply with NRC requirements, including the requirement to provide information that is complete and accurate in all material respects. Mr. Brooks' action in deliberately providing false information to the licensee raises serious doubt about his trustworthiness and reliability and particularly whether he can be relied upon to comply with NRC requirements and to provide complete and accurate information to NRC licensees in the future.

Consequently, I lack the requisite reasonable assurance that licensed activities can be conducted in compliance with the Commission's requirements and that the health and safety of the public would be protected if Mr. Brooks were permitted to be involved in NRC-licensed activities. Therefore, the public health, safety and interest require that Mr. Brooks be prohibited from any involvement in NRC-licensed activities for a period of five years from the date of this Order. Additionally, Mr. Brooks is required to notify the NRC of his first employment in NRC-licensed activities for the five year period after the above prohibition period. Furthermore, pursuant to 10 CFR 2.202, based on the significance of Mr. Brooks' conduct described above and the fact that he could seek and obtain employment and unescorted access at other nuclear facilities, and engage in licensed activities before his criminal history became known to the licensee, I find that the public health, safety and interest require that this Order be effective immediately.

IV

Accordingly, pursuant to Sections 103, 161b, 161i, 161o, and 186 of the Atomic Energy Act of 1954, as amended, and the Commission's regulations in 10 CFR 2.202, 10 CFR Part 50.5, and 10 CFR 150.20, *It is hereby ordered, effective immediately, that:*

1. Leland H. Brooks is prohibited for five years from the date of this order from engaging in NRC licensed activities. NRC-licensed activities are those that are conducted pursuant to a specific or general license issued by the NRC, including, but not limited to, those activities of Agreement State licensees conducted pursuant to the authority granted by 10 CFR 150.20.

2. If Leland H. Brooks is currently involved with another employer in NRC-licensed activities, he must immediately cease such activities, and inform the NRC of the name, address and telephone number of the employer, and provide a copy of this Order to the employer.

3. For the five-year period after the above prohibition period has expired, Mr. Brooks shall notify the Director, Office of Enforcement, U.S. Nuclear Regulatory Commission, Washington, D.C., 20555, within 20 days of the first time he accepts an offer for employment in NRC-licensed activities, as defined in Paragraph IV.1 above. In the notification, he will include a statement of his commitment to comply with regulatory requirements and address why the NRC should have confidence that he will comply with regulatory requirements, and the name, address and telephone number of his employer or entity where he will be involved in licensed activities.

The Director, Office of Enforcement, may relax or rescind, in writing, any of the above conditions upon a showing by Mr. Brooks of good cause.

V

In accordance with 10 CFR 2.202, Mr. Brooks must, and any other person adversely affected by this Order may, submit an answer to this Order, and may request a hearing on this order within 20 days of its issuance. Where good cause is shown, consideration will be given to extending the time to request a hearing. A request for extension of time must be made in writing to the Director, Office of Enforcement, U.S. Nuclear Regulatory Commission, Washington, D.C. 20555, and include a statement of good cause for the extension. The answer may consent to this Order. Unless the answer consents to this Order, the answer shall, in writing and under oath or affirmation, specifically admit or deny each allegation or charge made in this Order and shall set forth the matters of fact and law on which Mr. Brooks, or any other such person adversely affected, relies and the reasons as to why the Order should not have been issued. Any answer or request for a hearing shall be submitted to the Secretary, U.S. Nuclear Regulatory Commission, *Attn.*: Chief, Rulemaking and Adjudications Staff, Washington, D.C. 20555. Copies also shall be sent to the Director, Office of Enforcement, U.S. Nuclear Regulatory Commission, Washington, D.C. 20555, to the Deputy Assistant General Counsel for Enforcement at the same address, to the Regional Administrator, NRC Region IV, 611 Ryan Plaza Drive, Suite 400, Arlington, Texas 76011, and to Mr. Brooks if the answer or hearing request is by a person other than Mr. Brooks. If a person other than Mr. Brooks requests a hearing, that person shall set forth with particularity the manner in which his or her interest is adversely affected by this Order and shall address the criteria set forth in 10 CFR 2.714(d).

If a hearing is requested by Mr. Brooks or a person whose interest is adversely affected, the Commission will issue an Order designating the time and place of any hearing. If a hearing is held, the issue to be considered at such hearing shall be whether this Order should be sustained.

Pursuant to 10 CFR 2.202(c)(2)(i)I Mr. Brooks may, in addition to demanding a hearing, at the time the answer is filed or sooner, move the presiding officer to set aside the immediate effectiveness of the Order, on the ground that the Order, including the need for immediate effectiveness, is not based on adequate evidence but on mere suspicion, unfounded allegations, or error.

In the absence of any request for a hearing, or written approval of an extension of time in which to request a hearing, the provisions specified in Section IV above shall be final 20 days from the date of this Order without further order or proceedings. If an extension of time for requesting a hearing has been approved, the provisions specified in Section IV shall be final when the extension expires if a hearing request has not been received. AN ANSWER OR A REQUEST FOR HEARING SHALL NOT STAY THE IMMEDIATE EFFECTIVENESS OF THIS ORDER.

Dated at Rockville, Maryland this 24th day of July 1998.

For the Nuclear Regulatory Commission.

William D. Travers,

Deputy Executive Director for Regulatory Effectiveness.

[FR Doc. 98–21759 Filed 8–12–98; 8:45 am]

BILLING CODE 7590–01–P

NUCLEAR REGULATORY COMMISSION

[Docket No. 410]

Niagara Mohawk Power Corporation; Notice of Consideration of Issuance of Amendment to Facility Operating License, Proposed No Significant Hazards Consideration Determination, and Opportunity for a Hearing

The U.S. Nuclear Regulatory Commission (the Commission) is considering issuance of an amendment to Facility Operating License No. NPF–69 issued to Niagara Mohawk Power Corporation (the licensee) for operation of the Nine Mile Point Nuclear Station, Unit 1, located in Oswego County, New York.

The proposed amendment would change Technical Specification (TS) 3/4.2.3 regarding reactor coolant chemistry in accordance with a report by Electrical Power Research Institute, Inc. (EPRI) TR–103515–R1, ''BWR Water Chemistry Guidelines, 1996 Revision,'' also known as Boiling Water Reactor Vessel and Internals Project (BWRVIP)–29. Specifically, the amendment would define new conductivity limits in TS 3.2.3a (when reactor coolant is 200 degrees F or more and reactor thermal power is no more that 10%), and in TS 3.2.3b (when reactor thermal power exceeds 10%). The new conductivity limits would be 1 micro-mho/cm, which is less than the existing limits of 2 micro-mho/cm and 5 micro-mho/cm. The chloride ion limit in TS 3.2.3a, 0.1 ppm, would remain at this value but would be designated as 100 ppb. The chloride ion limit in TS 3.2.3b would be changed from 0.2 ppm to 20 ppb. Sulfate ion limits would be added to TS 3.2.3a and TS 3.2.3b at 100 ppb and 20 ppb, respectively. The proposed change to TS 3.2.3a would require that the reactor coolant water shall not exceed these new limits specified in TS 3.2.3a for conductivity, chloride ion, or sulfate ion for more than 24 hours when the coolant temperature is equal to or greater than 200 degrees F and the reactor thermal power is no more than 10 percent, or a shutdown shall be initiated within 1 hour and the reactor shall be shutdown and reactor coolant temperature reduced to below 200 degrees F within 10 hours. Similarly, TS 3.2.3b would require that the reactor coolant water not exceed the new limits specified in TS 3.2.3b for more than 24 hours when reactor thermal power exceeds 10 percent, or a shutdown shall be initiated within 1 hour and the reactor shall be shutdown and reactor coolant temperature reduced to less than 200 degrees F within 10 hours. TS

3.2.3c would be changed to state: ''In no case shall the reactor coolant exceed the following limits at the specified conditions or a shutdown shall be initiated within 1 hour and the reactor shall be shutdown and reactor coolant temperature be reduced to less than 200 degrees F within 10 hours: (1) With reactor coolant temperature at or above 200 degrees F, the conductivity has a maximum limit of 5 micro-mho/cm, or (2) With reactor coolant temperature at or above 200 degrees F and reactor thermal power no more than 10 percent, the maximum limit of chloride or sulfate ion concentration is 200 ppb, or (3) With reactor thermal power greater than 10 percent, the maximum limit of chloride or sulfate ion concentration is 100 ppb.'' Existing TS 3.2.3d would be revised to require that ''If the continuous conductivity monitor is inoperable for more than 7 days, a shutdown shall be initiated within 1 hour and the reactor shall be shutdown and reactor coolant temperature be reduced to below 200 degrees F within 24 hours''. A new TS 3.2.3e would be added to require that ''If the ability to analyze a sample for both chloride and sulfate ions is lost for more than 24 hours, coincident with reactor water conductivity being more than 0.19 micro-mho/cm for more than 24 hours, a shutdown shall be initiated within 1 hour and the reactor shall be shutdown and reactor coolant temperature reduced to below 200 degrees F within 24 hours.'' A new TS 3.2.3f would be added to require that ''If the ability to analyze for conductivity and chloride and sulfate ion concentration is lost for more than 24 hours, a shutdown shall be initiated within 1 hour and the reactor shall be shutdown and reactor coolant temperature reduced to below 200 degrees F within 10 hours.'' TS 4.2.3 would be revised to add that the samples taken and analyzed for conductivity and chloride ion content are also to be analyzed for sulfate ion content. The sampling frequency specified in TS 4.2.3 would be increased from ''at least 3 times per week with a maximum time of 96 hours between samples'' to ''daily.'' TS Bases 3/4.2.3 would also be changed to reflect that the purpose of TS 3/4.2.3 is to limit intergranular stress corrosion cracking crack growth rates to values consistent with Nine Mile Point Unit 1 (NMP1) core shroud analyses in accordance with an NRC letter dated May 8, 1997, and to describe the NMP1 operating philosophy of maintaining levels (averaged over an operating cycle) for conductivity, chloride and sulfate concentration to values that ensure the crack growth rate is bounded by the core shroud analysis.

Before issuance of the proposed license amendment, the Commission will have made findings required by the Atomic Energy Act of 1954, as amended (the Act) and the Commission's regulations.

The Commission has made a proposed determination that the amendment request involves no significant hazards consideration. Under the Commission's regulations in 10 CFR 50.92, this means that operation of the facility in accordance with the proposed amendment would not (1) involve a significant increase in the probability or consequences of an accident previously evaluated; or (2) create the possibility of a new or different kind of accident from any accident previously evaluated; or (3) involve a significant reduction in a margin of safety. As required by 10 CFR 50.91(a), the licensee has provided its analysis of the issue of no significant hazards consideration, which is presented below:

1. The operation of Nine Mile Point Unit 1, in accordance with the proposed amendment, will not involve a significant increase in the probability or consequences of an accident previously evaluated.

The changes to the conductivity and chloride ion action levels and the addition of sulfate ion levels in reactor water chemistry are being made to make the TS and TS Bases consistent with the values used in the core shroud vertical weld cracking evaluations. These new values reflect NMPC's [Niagara Mohawk Power Corporation's] commitment to Table 4–4 of the ''Electric Power Research Institute (EPRI) BWR Water Chemistry Guidelines—1996 Revision'' (TR–103515–R1, BWRVIP–29) and are equal to or more restrictive than the present TS values. No physical modification of the plant is involved and no changes to the methods in which plant systems are operated are required. None of the precursors of previously evaluated accidents are affected and therefore, the probability of an accident previously evaluated is not increased. These changes to the coolant chemistry TS provide more restrictive limits. No new failure modes are introduced. Therefore, these changes will not involve a significant increase in the consequences of an accident previously evaluated.

2. The operation of Nine Mile Point Unit 1, in accordance with the proposed amendment, will not create the possibility of a new or different kind of accident from any accident previously evaluated.

The changes to the conductivity and chloride ion action levels and the addition of sulfate ion levels in reactor water chemistry are being made to make the TS and TS Bases consistent with the values used in the core shroud vertical weld cracking evaluations. The new values reflect NMPC's commitment to Table 4–4 of the EPRI BWR water chemistry guidelines, and are equal to or more restrictive than the present TS values. No physical modification of the plant is involved and no changes to the methods in which plant systems are operated are required. The changes do not introduce any new failure modes or conditions that may create a new or different accident. Therefore, these changes do not create the possibility of a new or different kind of accident [from any accident] previously evaluated.

3. The operation of Nine Mile Point Unit 1, in accordance with the proposed amendment, will not involve a significant reduction in a margin of safety.

The changes to the conductivity and chloride ion action levels and the addition of sulfate ion levels in reactor water chemistry are being made to make the TS and TS Bases consistent with the values used in the core shroud vertical weld cracking evaluations. These new values reflect NMPC's commitment to Table 4–4 of the EPRI BWR water chemistry guidelines, and are equal to or more restrictive than the present TS values. No physical modification of the plant is involved and no changes to the methods in which plant systems are operated are required. The changes do not adversely affect any physical barrier to the release of radiation to plant personnel or the public. Therefore, these changes do not involve a significant reduction in a margin of safety.

The NRC staff has reviewed the licensee's analysis and, based on this review, it appears that the three standards of 10 CFR 50.92(c) are satisfied. Therefore, the NRC staff proposes to determine that the amendment request involves no significant hazards consideration.

The Commission is seeking public comments on this proposed determination. Any comments received within 30 days after the date of publication of this notice will be considered in making any final determination.

Normally, the Commission will not issue the amendment until the expiration of the 30-day notice period. However, should circumstances change during the notice period such that failure to act in a timely way would result, for example, in derating or shutdown of the facility, the Commission may issue the license amendment before the expiration of the 30-day notice period, provided that its final determination is that the amendment involves no significant hazards consideration. The final determination will consider all public and State comments received. Should the Commission take this action, it will publish in the **Federal Register** a notice of issuance and provide for opportunity for a hearing after issuance. The Commission expects that the need to take this action will occur very infrequently.

Written comments may be submitted by mail to the Chief, Rules and

Directives Branch, Division of Administrative Services, Office of Administration, U.S. Nuclear Regulatory Commission, Washington, DC 20555–0001, and should cite the publication date and page number of this **Federal Register** notice. Written comments may also be delivered to Room 6D59, Two White Flint North, 11545 Rockville Pike, Rockville, Maryland, from 7:30 a.m. to 4:15 p.m. Federal workdays. Copies of written comments received may be examined at the NRC Public Document Room, the Gelman Building, 2120 L Street, NW., Washington, DC.

The filing of requests for hearing and petitions for leave to intervene is discussed below.

By September 10, 1998, the licensee may file a request for a hearing with respect to issuance of the amendment to the subject facility operating license and any person whose interest may be affected by this proceeding and who wishes to participate as a party in the proceeding must file a written request for a hearing and a petition for leave to intervene. Requests for a hearing and a petition for leave to intervene shall be filed in accordance with the Commission's ''Rules of Practice for Domestic Licensing Proceedings'' in 10 CFR Part 2. Interested persons should consult a current copy of 10 CFR 2.714 which is available at the Commission's Public Document Room, the Gelman Building, 2120 L Street, NW., Washington, DC, and at the local public document room located at the Reference and Documents Department, Penfield Library, State University of New York, Oswego, New York 13126. If a request for a hearing or petition for leave to intervene is filed by the above date, the Commission or an Atomic Safety and Licensing Board, designated by the Commission or by the Chairman of the Atomic Safety and Licensing Board Panel, will rule on the request and/or petition; and the Secretary or the designated Atomic Safety and Licensing Board will issue a notice of hearing or an appropriate order.

As required by 10 CFR 2.714, a petition for leave to intervene shall set forth with particularity the interest of the petitioner in the proceeding, and how that interest may be affected by the results of the proceeding. The petition should specifically explain the reasons why intervention should be permitted with particular reference to the following factors: (1) the nature of the petitioner's right under the Act to be made party to the proceeding; (2) the nature and extent of the petitioner's property, financial, or other interest in the proceeding; and (3) the possible effect of any order which may be entered in the proceeding on the petitioner's interest. The petition should also identify the specific aspect(s) of the subject matter of the proceeding as to which petitioner wishes to intervene. Any person who has filed a petition for leave to intervene or who has been admitted as a party may amend the petition without requesting leave of the Board up to 15 days prior to the first prehearing conference scheduled in the proceeding, but such an amended petition must satisfy the specificity requirements described above.

Not later than 15 days prior to the first prehearing conference scheduled in the proceeding, a petitioner shall file a supplement to the petition to intervene which must include a list of the contentions which are sought to be litigated in the matter. Each contention must consist of a specific statement of the issue of law or fact to be raised or controverted. In addition, the petitioner shall provide a brief explanation of the bases of the contention and a concise statement of the alleged facts or expert opinion which support the contention and on which the petitioner intends to rely in proving the contention at the hearing. The petitioner must also provide references to those specific sources and documents of which the petitioner is aware and on which the petitioner intends to rely to establish those facts or expert opinion. Petitioner must provide sufficient information to show that a genuine dispute exists with the applicant on a material issue of law or fact. Contentions shall be limited to matters within the scope of the amendment under consideration. The contention must be one which, if proven, would entitle the petitioner to relief. A petitioner who fails to file such a supplement which satisfies these requirements with respect to at least one contention will not be permitted to participate as a party.

Those permitted to intervene become parties to the proceeding, subject to any limitations in the order granting leave to intervene, and have the opportunity to participate fully in the conduct of the hearing, including the opportunity to present evidence and cross-examine witnesses.

If a hearing is requested, the Commission will make a final determination on the issue of no significant hazards consideration. The final determination will serve to decide when the hearing is held.

If the final determination is that the amendment request involves no significant hazards consideration, the Commission may issue the amendment and make it immediately effective, notwithstanding the request for a hearing. Any hearing held would take place after issuance of the amendment.

If the final determination is that the amendment request involves a significant hazards consideration, any hearing held would take place before the issuance of any amendment.

A request for a hearing or a petition for leave to intervene must be filed with the Secretary of the Commission, U.S. Nuclear Regulatory Commission, Washington, DC 20555–0001, Attention: Rulemakings and Adjudications Staff, or may be delivered to the Commission's Public Document Room, the Gelman Building, 2120 L Street, NW., Washington, DC, by the above date. A copy of the petition should also be sent to the Office of the General Counsel, U.S. Nuclear Regulatory Commission, Washington, DC 20555–0001, and to Mark J. Wetterhahn, Esquire, Winston & Strawn, 1400 L Street, NW., Washington, DC 20005–3502, attorney for the licensee.

Nontimely filings of petitions for leave to intervene, amended petitions, supplemental petitions and/or requests for hearing will not be entertained absent a determination by the Commission, the presiding officer or the presiding Atomic Safety and Licensing Board that the petition and/or request should be granted based upon a balancing of the factors specified in 10 CFR 2.714(a)(1)(i)–(v) and 2.714(d).

For further details with respect to this action, see the application for amendment dated July 16, 1998, which is available for public inspection at the Commission's Public Document Room, the Gelman Building, 2120 L Street, NW., Washington, DC, and at the local public document room located at the Reference and Documents Department, Penfield Library, State University of New York, Oswego, New York 13126. This notice supersedes a previous notice (62 FR 40851, published July 30, 1997) which was based upon an amendment request dated July 2, 1997. The request dated July 2, 1997 was superseded in its entirety by the amendment request dated July 16, 1998.

Dated at Rockville, Maryland, this 5th day of July, 1998.

For the Nuclear Regulatory Commission.

Darl S. Hood,

Senior Project Manager, Project Directorate I–1, Division of Reactor Projects—I/II, Office of Nuclear Reactor Regulation.

[FR Doc. 98–21725 Filed 8–12–98; 8:45 am]

BILLING CODE 7590–01–P

NUCLEAR REGULATORY COMMISSION

[Docket No. 50–461]

Illinois Power; Clinton Power Station, Environmental Assessment and Finding of No Significant Impact

The U.S. Nuclear Regulatory Commission (the Commission) is considering issuance of an amendment to Facility Operating License No. NPF–62, issued to Illinois Power (the licensee), for operation of the Clinton Power Station located in DeWitt County, Illinois.

Environmental Assessment

Identification of the Proposed Action

The proposed action is in accordance with the licensee's application for amendment dated May 4, 1998, and would incorporate Technical Specifications requirements for the protection systems for the new static VAR compensators being installed onsite to address degraded electrical grid voltage.

The Need for the Proposed Action

The proposed action is needed as part of the solution to address degraded electrical grid voltage at Clinton Power Station.

Environmental Impacts of the Proposed Action

The Commission has completed its evaluation of the proposed action and concludes that the change will improve the plant's capability to handle degraded grid voltage. The change will not increase the probability or consequences of accidents, no changes are being made in the types of any effluents that may be released offsite, and there is no significant increase in the allowable occupational or public radiation exposure. Accordingly, the Commission concludes that there are no significant radiological environmental impacts associated with the proposed action.

With regard to potential nonradiological impacts, the proposed action does involve features located entirely within the restricted area as defined in 10 CFR Part 20. It does not affect nonradiological plant effluents and has no other nonradiological environmental impact.

Accordingly, the Commission concludes that there are no significant environmental impacts associated with the proposed action.

Alternatives to the Proposed Action

Since the Commission has concluded there is no significant environmental impact associated with the proposed action, any alternatives with equal or greater environmental impact need not be evaluated. As an alternative to the proposed action, the staff considered denial of the proposed action. Denial of the application would result in no change in current environmental impacts. The environmental impacts of the proposed action and the alternative action are similar.

Alternative Use of Resources:

This action does not involve the use of any resources not previously considered in the Final Environmental Statement for the Clinton Power Station (NUREG–0854, May 1982).

Agencies and Persons Consulted:

In accordance with its stated policy, on June 11, 1998, the staff consulted with the Illinois State official, F. Nizidlek of the Illinois Department of Nuclear Safety, regarding the environmental impact of the proposed action. The State official had no comments.

Finding of No Significant Impact

Based upon the environmental assessment, the Commission concludes that the proposed action will not have a significant effect on the quality of the human environment. Accordingly, the Commission has determined not to prepare an environmental impact statement for the proposed action.

For further details with respect to the proposed action, see the licensee's letter dated May 4, 1998, which is available for public inspection at the Commission's Public Document Room, the Gelman Building, 2120 L Street, NW., Washington, DC, and at the local public document room located at the Vespasian Warner Public Library, 310 N. Quincy Street, Clinton, IL 61727.

Dated at Rockville, Maryland, this 7th day of August 1998.

For the Nuclear Regulatory Commission.

Jon B. Hopkins,

Senior Project Manager, Project Directorate III–3, Division of Reactor Projects—III/IV, Office of Nuclear Reactor Regulation.

[FR Doc. 98–21758 Filed 8–12–98; 8:45 am]

BILLING CODE 7590–01–P

SECURITIES AND EXCHANGE COMMISSION

[File No. 5001–1]

Order of Suspension of Trading; Eventemp Corporation

August 10, 1998.

It appears to the Securities and Exchange Commission that there is a lack of current and accurate information concerning the securities of Eventemp Corporation (''Eventemp''), a Scottsdale, Arizona-based company which holds itself out to be the developer of a self contained climate control system for automobiles. There are questions regarding the accuracy and adequacy of publicly disseminated information concerning, among other things, a purported contract with a national car dealership group to purchase the climate control system, and other orders and commitments for the system.

The Commission is of the opinion that the public interest and the protection of investors require a suspension of trading in the securities of the above-listed company.

Therefore, it is ordered, pursuant to Section 12(k) of the Securities Exchange Act of 1934, that trading in the above-listed company is suspended for the period from 9:30 a.m. EST, August 10, 1998 through 11:50 p.m. EST, on August 21, 1998.

By the Commission.

Margaret H. McFarland,

Deputy Secretary.

[FR Doc. 98–21815 Filed 8–11–98; 9:37 am]

BILLING CODE 8010–01–M

SECURITIES AND EXCHANGE COMMISSION

[Release No. 34–40298; File Nos. SR-Amex–98–28; SR–CBOE–98–32; and SR-Phlx–98–33]

Self-Regulatory Organizations; Notice of Filing and Order Granting Accelerated Approval of Proposed Rule Change and Related Amendments by the American Stock Exchange, Incorporated, the Chicago Board Options Exchange, Incorporated and the Philadelphia Stock Exchange, Incorporated Relating to the Listing and Trading of Options on Telebras Holding Company Depositary Receipts SM

August 3, 1998.

Pursuant to Section 19(b)(1) of the Securities Exchange Act of 1934 [1]

[1] 15 U.S.C. 78s(b)(1).

(''Act'') and Rule 19b–4[2] thereunder, on July 10, 1998, July 16, 1998 and July 28, 1998, the Chicago Board Options Exchange, Incorporated (''CBOE''), the American Stock Exchange, Incorporated (''Amex'') and the Philadelphia Stock Exchange, Incorporated (''Phlx''), respectively, filed with the Securities and Exchange Commission (''SEC'' or ''Commission'') the proposed rule changes, as described in Items I and II below, which Items have been prepared by the self-regulatory organizations (''SROs''), to permit the listing and trading of standardized equity options on Telebras Holding Company Depositary Receipts℠ (''HOLDRs''),[3] as described below.

On July 28, 1998 and July 31, 1998 the Amex and the CBOE, respectively submitted amendments to their proposed rule changes.[4] This order approves the proposed rule changes, and Amex Amendment No. 1 and CBOE Amendment No. 1 on an accelerated basis.

I. Self-Regulatory Organization's Statement of the Terms of Substance of the Proposed Rule Change

The SROs propose to list and trade standardized equity options on HOLDRs, as described below. The texts of the proposed rule changes are available at the Office of the Secretary, Amex, CBOE and Phlx, respectively, and at the Commission.

II. Self-Regulatory Organization's Statement of the Purpose of, and Statutory Basis for, the Proposed Rule Change

In their filings with the Commission, the SROs included statements concerning the purpose of and basis for the proposed rule changes and discussed any comments they received on the proposed rule change. The text of those statements may be examined at the places specified in Item IV below and summaries of the most significant aspects are set forth in sections (A), (B), and (C) below.

(A) Self-Regulatory Organizations' Statement of the Purpose of, and the Statutory Basis for, the Proposed Rule Change

1. Purpose

Telecommunicacoes Brasileiras S.A. (''Telebras'') is a corporation organized under the laws of the Federative Republic of Brazil. Prior to July 28, 1998, Telebras was wholly-owned by the government of Brazil. HOLDRs are American Depositary Receipts (''ADRs'') intended to represent the American Depositary Shares (''ADSs'') of Telebras currently listed on the NYSE, until such time as Telebras spins off twelve companies (''Reorganization'').[5] More specifically, HOLDRs are designed to provide current Telebras ADS owners with a single, exchange traded instrument that is intended to represent, as each spin-off occurs in connection with the Reorganization, (whether concurrently or in tranches), the ADSs of each spin-off company (''Spin-Off ADSs'') and Telebras ADSs (collectively with the Spin-Off ADSs, known as the ''Securities'') until the Telebras ADSs are extinguished. After the Telebras ADSs are extinguished, HOLDRs will represent all the Spin-Off ADSs. HOLDRs will be a separately registered security, with a separate CUSIP number, from each of the Spin-Off ADSs.

In order to purchase HOLDRs before the Reorganization, existing beneficial owners of Telebras ADSs may elect to deposit their Telebras ADSs with The Bank of New York as depositary (''Depositary'') in return for one HOLDR for each Telebras ADS as deposited.[6] After the spin-offs occur, either concurrently or in tranches, beneficial owners of Telebras ADSs also may deposit their Telebras ADSs (until they are extinguished) with the Depositary, along with their newly acquired Spin-Off ADSs, in order to receive HOLDRs. The beneficial owners of the HOLDRs registered on the books of the Depositary (''Owners'') will only be able to trade the HOLDRs themselves, which, in effect, will constitute a trade of a basket of the Securities. If an Owner of HOLDRs desires to buy or sell some but not all of the Securities the HOLDRs represent at that time.

Currently, the SROs provide for the trading of standardized equity options overlying the Telebras ADSs. Telebras is the most active stock in Brazil, trading 22 million shares per day and accounting for 55% of the total value of trade on the Bolsa de Valores de Sao Paolo (''Bovespa''). Prior to July 28, 1998, Telebras ADSs were trading at approximately $115 per share with 96 million ADSs outstanding and 40,000 holders, with average daily trading volume of 3.5 million shares, and annual volume during the preceding twelve months equal to approximately 892 million shares.[7] Since July 28, 1998, Telebras ADSs have been trading at approximately $125 per share with an average daily trading volume of approximately 8.2 million shares.[8] In addition, options on Telebras ADSs are the sixth most active option class in the U.S., with an average daily trading volume of 23,400 contracts and an open interest of 415,000 contracts.

The SROs now propose to trade options on HOLDRs pursuant to Amex Rule 915. CBOE Rule 5.3 and Phlx Rule 1009 (collectively, the ''SRO Rules''), respectively.[9] The SROs, however, have requested to rely upon the trading volume and market price history of Telebras ADSs for purposes of satisfying the associated requirements under the SRO Rules. Commentary .01 of the SRO Rules[10] requires that, absent exceptional circumstances, at the time the SRO selects an underlying security for options transactions, the following guidelines with respect to the issuer shall be met: (1) there are a minimum of 7 million shares of the underlying securities which are owned by persons other than those required to report their security holding under Section 16(a) of the Act (''Public Ownership Requirement''); (2) there are a minimum of 2,000 holders of the underlying security (''Public Holder Requirement''); (3) there is trading volume (in all markets in which the underlying security is traded) of a least 2.4 million shares during the preceding 12 months (''Volume Requirement''); (4) the market price per share of the underlying security has been at least $7.50 for the

[2] 17 CFR 240.19b–4.

[3] ''HOLDRs'' and ''Holding Company Depositary Receipts'' are service marks of Merrill Lynch & Co., Inc. (''Merrill Lynch'').

[4] See Letter from Claire P. McGrath, Vice President and Special Counsel, Amex to Michael Walinskas, Deputy Associate Director, Division of Market Regulation (''Division'') SEC dated July 28, 1998 (''Amex Amendment No. 1'') and Letter from Eileen Smith to Michael Walinskas, Deputy Associate Director, Division, SEC, July 31, 1998 (''CBOE Amendment No. 1''). Amex Amendment No. 1 clarifies the procedures to be followed in the event that a surveillance sharing arrangement with Brazil ceases to exist. CBOE Amendment No. 1 clarifies, among other things, the price and trading volume requirements that HOLDRs must satisfy in order to permit options trading overlying HOLDRs

[5] The government of Brazil divested its interest in Telebras through a public auction in Brazil that commenced on July 28, 1998. Subsequent to the auction, Telebras will be divided into 12 spin-off companies. After all 12 spin-offs are completed, Telebras, and therefore Telebras ADSs, may continue to exist for a limited period of time, but both eventually will be extinguished. The NYSE listed HOLDRs on July 28, 1998.

[6] A copy of the Deposit Agreement and Form F–6 (Registration No. 333–8840) has been filed with the Commission, declared effective on July 21, 1998 and is publicly available.

[7] Data provided by Bridge Data Company for the period July 1, 1997 through June 30, 1998.

[8] Data provided by Reuters and Bloomberg L.P. for the period after July 28, 1998.

[9] The SROs have already filed certification with the Options Clearing corporation for options on HOLDRs.

[10] The Amex and Phlx Rules refer to ''Commentaries'' while the CBOE Rules refer to ''Interpretations and Policies.'' For purposes of this order, the term ''Commentary'' will be used for all SRO Rules.

majority of business days during the three calendar months preceding the date of selection (''Price Requirement''); (5) the issuer is in compliance with any applicable requirements of the Act. Unless the SROs' request to rely upon the price history of Telebras ADSs in order to satisfy the Price Requirement applicable to options on HOLDRs is approved, the SROs would be required to wait at least three months prior to listing options on HOLDRs. The SROs believe, however, that it is essential that options on HOLDRs be provided without significant delay so that investors who have exchanged their Telebras ADSs for HOLDRs can use options to manage the risks of their positions in HOLDRs.

Commentary .03 of the SRO Rules requires that with respect to an ADR, an effective surveillance sharing arrangement be in place with the proper regulatory authority in the country where the security underlying the ADR trades or, as one of several alternatives, as the Commission otherwise authorizes the listing. The SROs note that the Commission has entered into a Memorandum of Understanding (''MOU'') with the Comissao de Valores Mobiliarios (''CVM'') in Brazil. In addition, the Amex represents that it has a surveillance sharing agreement (''SSA'') with the Bovespa. The CBOE represents that it has an SSA with the Bovespa and the Rio de Janeiro Stock Exchange (''RJSE'').[11] The Phlx does not have an SSA with the Bovespa or the RJSE. If the MOU ceases to exist, each SRO represents that it will contact the Commission immediately in order to enable the Commission to determine what measures should be taken with regards to the listing and trading of options on HOLDRs.[12]

Commentary .05(d) of the SRO Rules, which applies to options on securities issued during a restructuring transaction that are sold in a public offering or pursuant to a rights distribution (''Restructure Security''), provides that an SRO may ''look back'' to the ''original'' security regarding the Public Ownership Requirement and Public Holder Requirement subject to certain conditions enumerated in the SRO Rules. Commentary .05(d) also provides that an SRO may certify that the market price of the Restructure Security meets the Price Requirement by replying on the price history of the original security, provided that the Restructure Security has traded ''regular way'' on an exchange or automatic quotation system for at least five trading days immediately preceding the date of selection and has a market price of at least $7.50. Finally, Commentary .05(d) provides that an SRO may certify that the trading volume of the Restructure Security satisfies the Volume Requirement only if the trading volume in the Restructure Security, without reliance on the original security, has been at least 2.4 million shares during a period of 12 months or less ending on the date of the Restructure Security is selected for options trading.[13]

Initial reports indicate that at least 40 million shares of HOLDRs have been issued, with at least 2,000 public holders,[14] and that HOLDRs have been trading near the current market price for Telebras ADSs after July 28, 1998 (approximately $125) with an average daily trading volume of approximately 3.4 million shares.[15] In addition, the SROs state that although HOLDRs is a unique product, it resembles shares issued during a restructuring transaction. Therefore, the SROs believe that they should be allowed to rely on the price history of the original security. Accordingly, the SROs represent that HOLDRs will comply with the requirement that its market price be at least $7.50 for at least 5 trading days immediately prior to the listing date in order to rely upon the market price history of the original security to satisfy the three month Price Requirement. Thus, the SROs assert that options should be permitted to be listed on HOLDRs on the sixth day following the five day Price Requirement Period, provided that all other options listing criteria, including that HOLDRs has traded 2.4 million shares, have been met.[16]

The SROs believe that review under their respective rules will result in the establishment of position and exercise limits for the options overlying HOLDRs equal to 25,000 contracts on the same side of the market. Prior to the commencement of trading, the SROs will issue an Information Circular advising their concerning the proposed options on Telebras HOLDRs.

(2) Statutory Basis

The basis under the Act of the proposed rule changes is the requirement under Section 6(b) of the Act, and Section 6(b)5 in particular,[17] that an exchange have rules that are designed to promote just and equitable principals of trade, to remove impediments to, and perfect the mechanism of, a free and open market and a national market system, and, in general, to protect investors and the public interest. The SROs believe that the proposed rule changes satisfy the requirements of Section 6(b) in general, and Section 6(b)(5) in particular, because the expedited trading of options on HOLDRs will allow investors currently holding Telebras ADSs, and desiring to deposit those shares to receive HOLDRs, to continue to hedge their respective positions in Telebras ADSs by opening offsetting positions in HOLDRs options.

B. Self-Regulatory Organizations Statement on Burden on Competition

The SROs do not believe that the proposed rule change will impose any inappropriate burden on competition.

C. Self-Regulatory Organization's Statement on Comments on the Proposed Rule Change Received From Members, Participants or Others

No written comments were either solicited or received.

III. Commission's Findings and Order Granting Accelerated Approval of Proposed Rule Change

For the reasons discussed below, the Commission finds that the SROs' proposal are consistent with the requirements of the Act and the rules and regulations thereunder applicable to a national securities exchange. Specifically, the Commission finds that the proposed rule change is consistent with Section 6(b)(5) of the Act, which requires an exchange to have rules designed to promote just and equitable principles of trade, to remove impediments to, and perfect the mechanism of, a free and open market and a national market system, and, in general, to protect investors and the public interest.[18]

[11] The Amex makes this representation in Amex Amendment No. 1 and the CBOE makes this representation in CBOE Amendment No. 1.

[12] In the case of the Amex and CBOE, if the SSAs cease to exist but the MOU is still effective, they are not required to notify the Commission.

[13] The Restructure Security cannot piggyback upon the trading volume of the original security. Accordingly, the SROs cannot select a Restructure Security for options listing until 2.4 million shares of the Restructure Security actually have traded.

[14] Data provided by Merrill Lynch. See CBOE Amendment No. 1.

[15] Data provided by Reuters and Bloomberg L.P.

[16] Phone call between Nadita Yagnik, Counsel, Phlx and Marianne Duffy, Special Counsel, Division, SEC on August 3, 1998 and phone call between Scott Van Hatten, Legal Counsel, and Marianne Duffy, Special Counsel, Division, SEC on August 3, 1998.

[17] 15 U.S.C. 78f(b)(5).

[18] Pursuant to section 6(b)(5) of the Act, the Commission must predicate approval of any new securities product upon a finding that the introduction of such product is in the public interest. Such a finding would be difficult with respect to a warrant that served no hedging or other

Continued

As the Commission has previously stated,[19] it is necessary for securities to meet certain minimum standards regarding both the quality of the issuer and the quality of the market for a particular security to become options eligible. The Commission believes that these standards are imposed to ensure that those issuers upon whose securities options are to be traded are financially sound companies whose trading volume, market price, number of holders and public ownership of shares are substantial enough to ensure adequate depth and liquidity to sustain options trading that is not readily susceptible to manipulation. The Commission also recognizes that under Commentary .01 of the SRO Rules, investors may be precluded for a significant period (generally, the three calendar month period required to meet the Price Requirement) from employing an adequate hedging strategy involving options on newly issued securities such as those issued during an initial public offering or rights distribution.

As the SROs observe in their filings, an alternate method of meeting equity option listing standards has been established for securities issued in connection with a spin-off, reorganization, restructuring or similar corporate transaction.[20] These alternate standards facilitate the earlier listing of options on Restructure Securities by permitting an SRO to determine whether the Restructure Security satisfies the Volume Requirement and Price Requirement by reference to the trading volume and market price history of an outstanding equity security previously issued by the issuer of the Restructure Security.[21] While such criteria are not directly applicable to the listing of options on HOLDRs, the CBOE notes that HOLDRs are being issued as a result of a corporate restructuring. The SROs believe that the price history of Telebras ADSs should be allowed to be used to determine compliance with the Price Requirement since HOLDRs is designed to replicate Telebras ADSs at least until the spin-offs occur.[22] The SROs also originally asserted that the trading volume of Telebras ADSs should be used to determine the Volume Requirement but have now amended their proposals to represent that HOLDRs must trade 2.4 million shares prior to listing options thereon.[23]

The Commission believes that it is appropriate for the SROs to deem the Price Requirement satisfied for the listing of options on HOLDRs if HOLDRs has a closing price of at least $7.50 for at least five trading days since its issuance.[24] This conclusion is based on the Commission's determination that HOLDRs is designed to track the price of Telebras ADSs and/or the Spin-Off ADSs. It is extremely likely that HOLDRSs would independently meet the Price Requirement over the next three months.[25] Nevertheless, permitting the use of Telebras ADS price history to meet the Price Requirement will allow the desirable result of permitting Owners of HOLDRs to be able to hedge their exposure sooner through a single overlying options product. Finally, the Commission notes that requiring actual five day price history of HOLDRs prior to listing options thereon, further ensures that the market is sufficient to support options trading and is not subject to manipulation.

The Commission's approval of these proposals is also based on the fact that, apart from the Price Test, all other options listing criteria will be met prior to the listing of options on HOLDRs. In this regard, the Commission notes that initial reports indicate that HOLDRs has satisfied the requirements of Commentary .05(d) of the SRO Rules in that at least 40 million shares of HOLDRs have been issued, with at least 2,000 public holders,[26] and that HOLDRs has been trading near the current market price for Telebras ADSs after July 28, 1998 (approximately $125) with an average daily trading volume of approximately 3.4 million shares.[27]

In addition, as previously stated, Commentary .03 of the SRO Rules requires that with respect to an ADR, an affective surveillance sharing arrangement be in place with the proper regulatory authority in the country where the security underlying the ADR trades or, as one of several alternatives, as the Commission otherwise authorizes the listing. In evaluating new derivative instruments, the Commission, consistent with the protection of investors, considers the degree to which the derivative instrument is susceptible to manipulation. The ability to obtain information necessary to detect and deter market manipulation and other trading abuses is a critical factor in the Commission's evaluation. It is for this reason that the Commission requires that there be an SSA in place between an exchange listing or trading a derivative product and the exchanges trading the stocks underlying the derivative contract that specifically enables officials to survey trading in the derivative product and its underlying stocks.[28] Such agreements provide a necessary deterrent to manipulation because they facilitate the availability of information needed to fully investigate a potential manipulation if it were to occur. With regards to HOLDRs, these agreements are especially important to facilitate the collection of necessary

economic function, because any benefits that might be derived by market participants likely would be outweighed by the potential for manipulation, diminished public confidence in the integrity of the markets, and other valid regulatory concerns.

[19] See Securities Exchange Release No. 37011 (March 22, 1996) 61 FR 14177 (March 29, 1996) (order approving proposed rule changes relating to listing standards for options on securities issued in a reorganization transaction pursuant to a public offering or a rights distribution).

[20] The Commission notes that there is a distinction in treatment of options overlying securities issued to existing shareholders in a spin-off, reorganization or restructuring and options overlying securities issued through a public offering or rights distribution. Specifically, options overlying securities issued pursuant to a public offering or rights distribution cannot be listed until the market price of the Restructure Security has been at least $7.50 for at least five trading days immediately preceding the selection date, while options overlying securities issued to existing shareholders in a spin-off, reorganization or restructuring can ''look back'' to the ''original'' security to meet the Price Requirement without waiting five trading days.

[21] These alternate criteria also provide special provisions for evaluating the distribution of shares of a Restructure Security for purposes of meeting the Public Ownership Requirement and Public Holder Requirement.

[22] Although pages 7 and 8 of the Phlx filing represent that the Phlx alternatively argues that options on HOLDRs could be listed and traded on the day that the NYSE listed HOLDRs for trading, the Phlx has agreed to such language. Phone conversation between Nandita Yagnik, Counsel, Phlx and Marianne H. Duffy, Special Counsel, Division, SEC on July 31, 1998.

[23] The Commission notes, however, that holders of Telebras ADSs are not required to deposit their Telebras ADSs for HOLDRs. Therefore, the actual number of outstanding shares of, and public investors in, HOLDRs could not be determined with certainty for purposes of the Public Ownership Requirement and Public Holder Requirement of the SRO Rules, prior to the date that HOLDRs was listed on the NYSE. The Commission also notes that it is for this reason, among others, that Commission would not consider it permissible for the SROs to list and trade options on HOLDRs on the day that the NYSE listed HOLDRs.

[24] This approach incorporates the price history of Telebras ADSs for the prior measured period. Telebras ADSs have traded well in excess of $7.50 per share for the prior three months.

[25] As previously noted, HOLDRs has traded at approximately $125 per share since July 28, 1998.

[26] Supra note 14.

[27] Supra note 15.

[28] The Commission believes that the ability to obtain relevant surveillance information, including, among other things, the identity of the ultimate purchasers and sellers of securities, is an essential and necessary component of an SSA. An SSA should provide the parties thereto with the ability to obtain information necessary to detect and deter market manipulation and other trading abuses. Consequently, the Commission generally requires that an SSA require that the parties to the agreement provide each other, upon request, information about market trading activity, clearing activity and customer identity. *See* Securities Exchange Act Release No. 31529 (November 27, 1992).

regulatory, surveillance and other information from foreign jurisdictions.[29]

In order to address the above noted concerns and to comply with Commentary .03 of the SRO Rules, the SROs note that the Commission has entered into an MOU with the CVM. The Amex represents that it has an SSA with the Bovespa. The CBOE represents that it has an SSA with the Bovespa and the RJSE.[30] If the MOU ceases to exist, each SRO represents that it will contact the Commission immediately in order to enable the Commission to determine what measures should be taken with regards to the listing and trading of options of HOLDRs.[31] The Commission believes that the combination of the SSAs and the MOU satisfy the requirement of Commentary .03 of the SRO Rules. The Commission also notes that the SROs have relied on the SSAs and the MOU to trade options overlying Telebras ADSs.

For the reasons described above, the Commission finds good cause to approve the proposed rule changes, and Amex Amendment No. 1 and CBOE Amendment No. 1, prior to the thirtieth day after publication of notice of filing thereof in the **Federal Register**. Specifically, Amex Amendment No. 1 clarifies the procedures to be followed in the event that a surveillance sharing arrangement with Brazil ceases to exist.[32] CBOE Amendment No. 1 clarifies, among other things, the Volume Requirement and five day Price Requirement that HOLDRs must satisfy in order to permit options trading overlying HOLDRs.[33] The Commission believes that the proposal will benefit investors who want to trade the Spin-Off ADSs in one exchange traded product, (similar to what investors trade through one Telebras ADS), and who seek to hedge their exposure through a single overlying options product. In addition, the Commission believes that any regulatory issues that are posed by options on HOLDRs have been adequately addressed by the SROs.

Accordingly, the Commission believes that it is consistent with Sections 6(b)(5) and 19(b)(2)[34] of the Act, to find that good cause exists to approve the proposed rule changes and Amex Amendment No. 1 and CBOE Amendment No. 1 on an accelerated basis.

IV. Solicitation of Comments

Interested persons are invited to submit written data, views and arguments concerning the foregoing, including whether the proposed rule changes are consistent with the Act. Persons making written submissions should file six copies thereof with the Secretary, Securities and Exchange Commission, 450 Fifth Street, NW, Washington, DC 20549. Copies of the submission, all subsequent amendments, all written statements with respect to the proposed rule change that are filed with the Commission, and all written communications relating to the proposed rule change between the Commission and any person, other than those that may be withheld from the public in accordance with the provisions with the provisions of 5 U.S.C. 552, will be available for inspection and copying in the Commission's Public Reference Section, 450 Fifth Street, NW, Washington, DC 20549. Copies of such filing will also be available for inspection and copying at the principal office of the SROs. All submissions should refer to File Nos. SR–Amex–98–28, SR–CBOE–98–32 and SR–Phlx–98–33 and should be submitted by September 3, 1998.

It is therefore ordered, pursuant to Section 19(b)(2) of the Act, that the proposed rule changes (SR–Amex–98–28, SR–CBOE–98–32 and SR–Phlx–98–33), and Amex Amendment No. 1 and CBOE Amendment No. 1, are approved.

For the Commission by the Division of Market Regulation, pursuant to delegated authority.[35]

Jonathan G. Katz,

Secretary.

[FR Doc. 98–21721 Filed 8–12–98; 8:45 am]

BILLING CODE 8010–01–M

[29] An MOU provides a framework for mutual assistance in investigatory and regulatory matters. Generally, the Commission has permitted an SRO to rely on an MOU in the absence of an SSA only if the SRO receives an assurance from the Commission that such an MOU can be relied on for surveillance purposes and includes, at a minimum, the transaction, clearing and customer information necessary to conduct an investigation. See Securities Exchange Act Release No. 35184 (December 30, 1994) 60 FR 2616 (January 10, 1995). In addition, an SRO should nonetheless endeavor to develop SSAs with the foreign exchange that trades the underlying securities even if the SRO receives prior Commission approval to rely on an MOU in place of an SSA.

[30] Supra note 11.

[31] The Commission notes that although the Phlx does not have an SSA with the Bovespa or RJSE, the MOU alone satisfies the requirement of Commentary .03 of the SRO Rules. Furthermore, the Commission believes that in the case of the Amex and the CBOE, if the SSAs cease to exist but the MOU is still effective, the Amex and the CBOE are not required to notify the Commission.

[32] Supra note 4.

[33] Supra note 4.

[34] 15 U.S.C. 78s(b)(2).

[35] 17 CFR 200.30–3(a)(12).

TENNESSEE VALLEY AUTHORITY

Paperwork Reduction Act of 1995, as Amended by P.L. 104–13; Submission for OMB Review; Comment Request

AGENCY: Tennessee Valley Authority.

ACTION: Submission for OMB Review; comment request.

SUMMARY: The proposed information collection described below will be submitted to the Office of Management and Budget (OMB) for review, as required by the Paperwork Reduction Act of 1995 (44 U.S.C. Chapter 35, as amended). The Tennessee Valley Authority is soliciting public comments on this proposed collection as provided by 5 C.F.R. Section 1320.8(d)(1). Requests for information, including copies of the information collection proposed and supporting documentation, should be directed to the Agency Clearance Officer: Wilma H. McCauley, Tennessee Valley Authority, 1101 Market Street (WR 4Q), Chattanooga, Tennessee 37402–2801; (423) 751–2523.

Comments should be sent to the OMB Office of Information and Regulatory Affairs, Attention: Desk Officer for the Tennessee Valley Authority September 14, 1998.

Type of Request: Regular submission.

Title of Information Collection: TVA Aquatic Plant Management.

Frequency of Use: On occasion.

Type of Affected Public: Individuals or households.

Small Businesses or Organizations Affected: No.

Federal Budget Functional Category Code: 452.

Estimated Number of Annual Responses: 2,000.

Estimated Total Annual Burden Hours: 400.

Estimated Average Burden Hours Per Response: .2.

Need For and Use of Information: TVA committed to involving the public in developing plans for managing aquatic plants in individual TVA lakes under a Supplemental Environmental Impact Statement completed in August 1993. This proposed survey will provide a mechanism for obtaining input into this planning process from a representative sample of people living near each lake. The information obtained from the survey will be factored into the development of aquatic plant management plans for mainstream Tennessee River lakes.

William S. Moore,

Senior Manager, Administrative Services.

[FR Doc. 98–21660 Filed 8–12–98; 8:45 am]

BILLING CODE 8120–08–P

DEPARTMENT OF TRANSPORTATION

Office of the Secretary

Reports, Forms and Recordkeeping Requirements; Agency Information Collection Activity Under OMB Review

AGENCY: Office of the Secretary, DOT.

ACTION: Notice.

SUMMARY: In accordance with the Paperwork Reduction Act of 1995 (44 U.S.C. Chapter 3501, *et seq.*) the Department of Transportation has submitted the following Information Collection Request (ICR) abstracted below to the Office of Management and Budget (OMB) for review and clearance. The ICR describes the nature of the information collections and their expected burden. The **Federal Register** Notice requesting an emergency approval on this collection of information was published on March 6, 1998 (61 FR page 11326).

FOR FURTHER INFORMATION CONTACT: Mr. Ladd Hakes, Office of the Secretary, U.S. Department of Transportation, 400 Seventh Street, SW., Washington, DC 20590, 202/366–4268; refer to the control number above.

SUPPLEMENTARY INFORMATION:

Office of the Secretary

Title: Uniform Administrative Requirements for Grants and Cooperative Agreements to State and Local Governments.

OMB Control Number: 2105–0520.

Type of Request: Extension of a current approved collection.

Form(s): SF424, SF269, S7270, SF271, SF272.

Affected Public: State and local governments receiving Federal financial assistance from the Department of Transportation (DOT).

Abstract: Requirements for Federal administration of financial assistance to State and Local governments is provided to affected Executive agencies via a common grant management rule, codified by DOT at 49 CFR part 18, Uniform Administrative Requirements for Grants and Cooperative Agreements to States and Local governments. The Office of Management and Budget (OMB) provides management and oversight of the common rule. OMB also provides for a standard figure of seventy (70) annual burden hours per grantee for completion of required forms.

Estimated Annual Burden Hours: 125,650 hours.

ADDRESSES: Send comments to the Office of Information and Regulatory Affairs, Office of Management and Budget, 725–17th Street, NW, Washington, DC 20503, Attention DOT Desk Officer.

Comments are invited on: whether the proposed collection of information is necessary for the proper performance of the functions of the Department, including whether the information will have practical utility; the accuracy of the Department's estimate of the burden of the proposed information collection; ways to enhance the quality, utility and clarity of the information to be collected; and ways to minimize the burden of the collection of information on respondents, including the use of automated collection techniques or other forms of information technology.

A comment to OMB is best assured of having its full effect if OMB receives it within 30 days of publication.

Issued in Washington, DC, on August 7, 1998.

Vanester M. Williams,

Clearance Officer, United States Department of Transportation.

[FR Doc. 98–21731 Filed 8–12–98; 8:45 am]

BILLING CODE 4910–62–P

DEPARTMENT OF TRANSPORTATION

Coast Guard

[USCG–1998–4298]

U.S. Delegation to the International Maritime Organization's Ballast Water Working Group

AGENCY: Coast Guard, DOT.

ACTION: Notice of meetings; request for comments.

SUMMARY: The U.S. Delegation to the Ballast Water Working Group (BWWG) of the Marine Environment Protection Committee (MEPC) of the International Maritime Organization (IMO) is conducting three public meetings in preparation for the 42nd session of the MEPC. This session is scheduled for November 2–6, 1998, in London, United Kingdom. All of the U.S. Delegation's meetings will be open to the public. The Coast Guard also solicits comments to develop its position for treaty negotiations for a possible annex to the International Convention on the Prevention of Pollution from Ships (MARPOL 73/78).

DATES: The public meetings are scheduled for the following times. The meetings will convene at the times indicated; however, they may be concluded early if their business is finished: (1) Monday, August 31, 1998, from 2 p.m. to 5 p.m.; (2) Thursday, September 10, 1998, from 2 p.m. to 5 p.m.; and (3) Thursday, October 15, 1998, from 2 p.m. to 5 p.m.

Written material and requests to make oral presentations should reach the Coast Guard at least five days before the date of the meeting you wish to attend. All comments must reach the Docket Management Facility on or before October 20, 1998; however, you are highly encouraged to submit your comments prior to the last meeting to facilitate discussion.

ADDRESSES: All meetings will be held at the Department of Transportation, Nassif Building, 400 Seventh Street, SW., Washington, DC 20590. This is near the L'Enfant Plaza stations of both the Metro subway and the Virginia Railway Express (VRE) train service. The August 31, meeting will be held in Room 3328, the September 10, meeting in Room 6200, and the October 15, meeting in Room 3328.

You may mail your comments to the Docket Management Facility, (USCG–1998–4298), U.S. Department of Transportation, room PL–401, 400 Seventh Street SW., Washington, DC 20590–0001, or deliver them to room PL–401 on the Plaza level of the Nassif Building at the same address between 10 a.m. and 5 p.m., Monday through Friday, except Federal holidays. The telephone number is 202–366–9329.

The Docket Management Facility maintains the public docket for this rulemaking. Comments, and documents as indicated in this notice, will become part of this docket and will be available for inspection or copying at room PL–401 on the Plaza level of the Nassif Building at the same address between 10 a.m. and 5 p.m., Monday through Friday, except Federal holidays. You may also access the docket on the Internet at *http://dms.dot.gov*.

FOR FURTHER INFORMATION CONTACT: For questions on this notice, or persons interested in presenting information at the meetings, contact Lieutenant Mary Pat McKeown, Office of Operating and Environmental Standards (G–MSO), telephone 202–267–0500, fax 202–267–4690, or electronic mail mmckeown@comdt.uscg.mil. For questions on viewing, or submitting material to, the docket, contact Ms. Dorothy Walker, Chief, Dockets, Department of Transportation, telephone 202–366–9329.

SUPPLEMENTARY INFORMATION:

Request for Comments

The Coast Guard encourages interested persons to participate in the preparation of the U.S. position on treaty negotiations for a possible annex to the International Convention on the

Prevention of Pollution from Ships (MARPOL 73/78) by submitting written data, views, or arguments. The draft annex is titled ''Regulations for the Control and Management of Ships' Ballast Water and Sediments to Minimize the Transfer of Harmful Aquatic Organisms and Pathogens''. A copy of the draft document is available for viewing under this docket at *http://dms.dot.gov*. Persons submitting comments should include their names and addresses, identify this notice (USCG–1998–4298) and the specific section of this document to which each comment applies, and give the reason for each comment.

Please submit all comments and attachments in an unbound format, no larger than 8½ by 11 inches, suitable for copying and electronic filing to the Docket Management Facility at the address under **ADDRESSES**. Persons wanting acknowledgement of receipt of comments should enclose stamped self-addressed postcards or envelopes. The Coast Guard will consider all comments received during the comment period.

Written material and requests to make oral presentations should reach the Coast Guard at least five days before the date of the meeting you wish to attend. All comments must reach the Docket Management Facility on or before October 20, 1998; however, you are highly encouraged to submit your comments prior to the last meeting to facilitate discussion.

Purpose of Meetings

The U.S. Delegation to the Ballast Water Working Group (BWWG) of the Marine Environment Protection Committee (MEPC) of the International Maritime Organization (IMO) consists of both Federal Government employees and non-government advisors. The meetings will be held to discuss the U.S. position of the treaty negotiations for a possible Annex to the International Convention on the Prevention of Pollution from Ships (MARPOL 73/78). The MEPC will discuss a draft text of the treaty annex at its 42nd session on November 2–6, 1998, in London, United Kingdom. The Committee will determine whether or not to hold a Conference of Parties to vote on the new Annex in the year 2000.

The U.S. delegation will also develop a U.S. position paper commenting on aspects of the current draft of the treaty. Additionally, the delegation will discuss the U.S. position on any papers submitted by other countries for MEPC's 42nd session.

Information on Service for Individuals with Disabilities

For information on facilities or services for individuals with disabilities or to request special assistance at the meeting, contact LT Mary Pat McKeown at the address or phone number under **FOR FURTHER INFORMATION CONTACT** as soon as possible.

Dated: August 7, 1998.

Joseph J. Angelo,

Director of Standards, Marine Safety and Environmental Protection.

[FR Doc. 98–21800 Filed 8–12–98; 8:45 am]

BILLING CODE 4910–15–M

DEPARTMENT OF TRANSPORTATION

Federal Railroad Administration

[Docket No. RSAC–96–1, Notice No. 12]

Railroad Safety Advisory Committee; Notice of Meeting

AGENCY: Federal Railroad Administration (FRA), Department of Transportation (DOT).

ACTION: Notice of Railroad Safety Advisory Committee (''RSAC'') meeting.

SUMMARY: FRA announces the next meeting of the RSAC, a Federal Advisory Committee that develops railroad safety regulations through a consensus process. The meeting will address a wide range of topics, including possible adoption of specific recommendations for regulatory action.

DATES: The meeting of the RSAC is scheduled to commence at 9:30 a.m. and conclude at 4:00 p.m. on Wednesday, September 9, 1998.

ADDRESSES: The meeting of the RSAC will be held at The Westin Hotel, 1400 M Street, NW, Washington, DC. The meeting is open to the public on a first-come, first-served basis and is accessible to individuals with disabilities. Sign language interpreters will be available for individuals with hearing impediments.

FOR FURTHER INFORMATION CONTACT: Vicky McCully, RSAC Coordinator, FRA, 400 7th Street, SW Washington, D.C. 20590, (202)493–6305 or Grady Cothen, Deputy Associate Administrator for Safety Standards and Program Development, FRA, 400 7th Street, SW, Washington, D.C. 20590, (202) 493–6302.

SUPPLEMENTARY INFORMATION: Pursuant to section 10(a)(2) of the Federal Advisory Committee Act (Pub. L. 92-463), FRA is giving notice of a meeting of the Railroad Safety Advisory Committee (''RSAC''). The meeting is scheduled to begin at 9:30 a.m. and conclude at 4:00 p.m. on Wednesday, September 9, 1998. The meeting will be held at The Westin Hotel, 1400 M Street, NW, Washington, DC. All times noted are Eastern Standard Time.

RSAC was established to provide advice and recommendations to the FRA on railroad safety matters. The Committee consists of 48 individual representatives, drawn from among 27 organizations representing various rail industry perspectives, and 2 associate non-voting representatives from the agencies with railroad safety regulatory responsibility in Canada and Mexico. Staff of the National Transportation Safety Board and Federal Transit Administration also participate in an advisory capacity.

During this meeting, the RSAC will receive status reports, containing progress information, from the Locomotive Crashworthiness Working Group, the Locomotive Cab Working Conditions Working Group, and the Event Recorder Working Group. A status report will also be received from the Positive Train Control (PTC) Working Group, tasked with: (1) facilitating understanding of current PTC technologies, definitions, and capabilities; (2) addressing issues regarding the feasibility of implementing fully integrated PTC systems; and (3) facilitating implementation of software based signal and operating systems through consideration of revisions to the Rules, Standards and Instructions to address processor-based technology and communication-based architectures.

Please refer to the notice published in the **Federal Register** on March 11, 1996 (61 FR 9740) for more information about the RSAC.

Issued in Washington, D.C. on August 7, 1998.

George A. Gavalla,

Acting Associate Administrator for Safety.

[FR Doc. 98–21783 Filed 8–12–98; 8:45 am]

BILLING CODE 4910–06–P

DEPARTMENT OF TRANSPORTATION

Maritime Administration

[Docket No. MARAD–98–4297]

Sea-Land Service, Inc.; Notice of Application to Increase Service in the Non-Contiguous Domestic Trade for Puerto Rico

Sea-Land Service, Inc. (Sea-Land), by application dated July 17, 1998, has applied for an increase in the authorized level of the service that Sea-Land

provides to the Commonwealth of Puerto Rico (Puerto Rico), pursuant to section 656(d) of Subtitle B, Title VI, of the Merchant Marine Act, 1936, as amended (1936 Act). In support of its application, Sea-Land has provided information related to the growth of Real Gross Product (RGP) for the Commonwealth of Puerto Rico, as supplied to Sea-Land by the Planning Board of the Office of the Governor of Puerto Rico.

This application is composed of two separate requests by Sea-Land. The first asks for revision of Sea-Land's authorized service level for Puerto Rico for Fiscal Year (FY) 1996 and FY 1997, based on revised figures for the increase in RGP for those periods. The second is a new request for a service level increase in respect to the growth in RGP for FY 1998. A summation of the service level increases requested by Sea-Land is attached hereto as Table I.

Any person, firm or corporation having an interest in this application for increased service authorization, and who desires to submit comments concerning Sea-Land's application, is requested to provide those comments to the Docket Clerk, U.S. DOT Dockets, Room PL–401, 400 Seventh Street, S.W., Washington, D.C. 20590. Such comments must be filed no later than 5:00 PM Eastern Time, Monday, September 14, 1998. All comments received will be available for examination at the above address between 10 a.m. and 5 p.m., e.t., Monday through Friday, except Federal Holidays. An electronic version of this document is available on the World Wide Web at http:/dms.dot.gov.

By Order of the Maritime Administrator.

Date: August 10, 1998.

Joel C. Richard,

Secretary, Maritime Administration.

Sea-Land Service, Inc.; Requested Increases in Authorized Non-Contiguous Domestic Service for the Commonwealth of Puerto Rico

Revision for FY 1996 (July 1, 1995 to June 30, 1996)

Due to the legislatively established end date of August 9, 1995, for the time period used for determination of grandfather service levels for containerships, FY 1996 is prorated for the period between August 9, 1995 and June 30, 1996. This proration is 326/366 days (1996 was a leap year).

Original FY 1996 RGP: 3.1 percent
Proration Factor: 326/366=.89
Original FY 1996 RGP proration:
(.89)x(3.1)=2.76 percent
Current Service Level for FY 1996:
(220,157)x(.0276)=6,076
220,157+6,076=226,233 TEUs
Revised FY 1996 RGP: 3.3 percent
Revised FY 1996 proration: (.89)x(3.3)=2.94 percent
Service level for FY 1996:
(220,157)x(.0294)=6,473 TEUs
Revised service level for FY 1996=220,157+6,473=226,630 TEUs
Change: +397 TEUs

Revision for FY 1997 (July 1, 1996 through June 30, 1997)

Original FY 1997 RGP: 2.8 percent
Current Service Level for FY 1997:
(226,233)x(.028)=6,335
226,233+6,335=232,568 TEUs
Revised FY 1997 RGP: 3.2 percent
Revised Service Level for FY 1997:
(226,630)x(.032)=7,252
226,630+7,252=233,882 TEUs
Change: +1,314 TEUs

Service Level Increase for FY 1998 (July 1, 1997 through June 30, 1998)

Revised Service Level (July 1, 1997): 233,882 TEUs
RGP for FY 1998 (uncorrected): 3.0 percent
Proposed Service Level (July 1, 1998):
(233,882)x(.03)=7,016
233,882+7,016=240,898 TEUs
Increase: 7,016 TEUs

[FR Doc. 98–21780 Filed 8–12–98; 8:45 am]

BILLING CODE 4910–81–P

DEPARTMENT OF TRANSPORTATION

National Highway Traffic Safety Administration

Discretionary Cooperative Agreement To Support Biomechanical Research

AGENCY: National Highway Traffic Safety Administration, DOT.

ACTION: Announcement of Discretionary Cooperative Agreement to Support Biomechanical Research.

SUMMARY: This notice announces a discretionary cooperative agreement program to support research studies to evaluate the biomechanical response of human surrogates to impact, and solicits applications for projects under this program.

DATES: Applications must be received on or before October 5, 1998.

ADDRESSES: Applications must be submitted to the National Highway Traffic Safety Administration, Office of Contracts and Procurement (NAD–30), ATTN: Rose Watson, 400 Seventh Street, S.W., Room 5301, Washington, D.C. 20590, USA. All applications submitted must include a reference to NHTSA Cooperative Agreement Program No. NRD–01–8–07346. Interested applicants are advised that no separate application package exists beyond the contents of this announcement.

FOR FURTHER INFORMATION CONTACT: General administrative questions may be directed to Rose Watson, Office of Contracts and Procurement, at (202) 366–9557. Programmatic questions relating to this cooperative agreement program should be directed to Emily A. Sun, National Transportation Biomechanics Research Center (NRD–51), 400 Seventh Street, S.W., Room 6221E, Washington, D.C. 20590, USA, at (202) 366–4722.

SUPPLEMENTARY INFORMATION:

Background and Objective

The National Highway Traffic Safety Administration (NHTSA) is responsible for devising strategies to save lives and reduce injuries from motor vehicle crashes. The purpose of this cooperative agreement program is to promote the improvement of traffic safety for the public through the support of research studies designed to evaluate the biomechanical response of human surrogates to impact, as a means of expanding the base of scientific knowledge in this field and to provide for the coordinated exchange of scientific information collected as a result of the studies conducted.

Impact trauma research employs the principles of mechanics to discover the physical response and physiological results of impacts to the human body. Generally, the teams doing the research are comprised of individuals from different disciplines: engineering, physiology, medicine, biology, and anatomy. The team studies the physical response of the body to impact by measuring and recording engineering parameters defining the event, such as force, accelerations, displacements, surface contours, strains, pressure, etc., and observing the physiological consequences in terms of physical or functional alterations to the body.

One of the major research materials used to simulate injury to the living human is the human cadaver, or human surrogate, exposed to impact and detailed response measurement.

The focus of this cooperative research effort is the study of human surrogate response and injury to physical impacts simulating some significant aspect of automotive impact injury, *e.g.*, head, neck, torso, or lower extremity injury produced in drivers and passengers restrained by various safety devices and exposed to either a frontal, lateral, or rear impact. The specific objective of this cooperative research effort are to perform human surrogate impact tests to: (1) delineate the mechanism of injury, (2) develop functional relationships between the measurable engineering parameters and the extent and severity of injury, and (3) quantify

the impact response of the body in such a way as to allow the development of mechanical analogs of the human body. NHTSA will consider applications which propose the use of human surrogates, such as human cadavers or other innovative techniques, to achieve these objectives.

NHTSA Involvement

The NHTSA National Transportation Biomechanics Research Center will be involved in all activities undertaken as part of the cooperative agreement program and will:

1. Provide, on an as-needed basis, one professional staff person, to be designated as the Contracting Officer's Technical Representative (COTR), to participate in the planning and management of the cooperative agreement and coordinate activities between the organization and the NHTSA;

2. Make available information and technical assistance from government sources, within available resources and as determined appropriate by the COTR;

3. Provide liaison with other government agencies and organizations as appropriate; and

4. Stimulate the exchange of ideas among cooperative agreement recipients, and, if appropriate, NHTSA contractors and other interested parties.

Involvement for Recipient of an Award

Any recipient of an award will:

1. Perform an effort in accordance with the application proposal and any incorporated revisions;

2. Contribute any in-kind resources that might have been specified by the recipient in the application, for the performance of the effort under the agreement;

3. Meet periodically with the NHTSA COTR to promote the exchange of information so as to assure coordination of the cooperative effort and related projects; and

4. Provide the NHTSA COTR with following required deliverables:

a. *Data Package:* The dynamic and other data measured in each human surrogate impact test will be provided by the recipient(s) within four (4) weeks after the test is run. For each and every test performed with a human surrogate, a data package shall be submitted to the COTR. For example, where a human subject to be impacted by pendulum to the right femur and later to be impacted by pendulum to the thorax, the two (2) impacts are separate tests even though there was only one (1) human surrogate.

A data package consists of (1) high speed film or an equivalent digitally-captured video, (2) two copies of the test report, and (3) test data stored on magnetic tape, CD–ROM, or floppy disk complying with the NHTSA Data Tape Reference Guide. The NHTSA National Transportation Biomechancis Research Center maintains a Biomechanics Data Base which provides information, upon request, to the public, including educational institutions and other research organizations.

To facilitate the input of data as well as the exchange of information, any recipient of a cooperative agreement awarded as a result of this notice must provide the magnetic tape in the format specified in the ''NHTSA Data Tape Reference Guide.'' A copy of this document may be obtained from the programmatic information contact designated in this notice.

b. *Performance Reports:* The recipient shall present one (1) hour semiannual technical performance briefings at the NHTSA headquarters building (at 400 Seventh Street, S.W., Washington, D.C. 20590) which shall be due 30 days after the reporting period and a final performance report within 90 days after the completion of the research effort. An original and two copies of the final performance report shall be submitted to the COTR.

Period of Support

The research effort described in this notice will be supported through the award of at least one cooperative agreement. NHTSA reserves the right to make multiple awards depending upon the merit of the applications received.

Contingent upon the availability of funds and satisfactory performance, a cooperative agreement(s) will be awarded to an eligible organization(s) for project periods of up to five years. No cooperative agreement awarded as a result of this notice shall exceed $550,000 per year of $2,750,000 for five years.

Eligibility Requirements

In order to be eligible to participate in this cooperative agreement program, an applicant must be an educational institution or other nonprofit research organization. For profit research organizations may apply; however, no fee or profit will be allowed.

Application Procedure

Each applicant must submit one original and two copies of their application package to: Cooperative Agreement Program No. NRD–01–8–07346, Office of Contracts and Procurement (NAD–30), NHTSA, 400 Seventh Street, S.W., Room 5301, Washington, D.C. 20590, USA. Only complete application packages received on or before the due date identified above will be considered. Submission of three additional copies will expedite processing but is not required.

Application Contents

The application package must be submitted with OMB Standard Form 424 (Rev. 4–88, including 424A and 424B), Application for Federal Assistance, with the required information filled in an the certified assurances included. While the Form 424–A deals with budget information, and section B identifies Budget Categories, the available space does not permit a level of detail which is sufficient to provide for a meaningful evaluation of the proposed costs. A supplemental sheet should be provided which represents a detailed breakdown of the proposed costs, as well as any costs which the applicant proposes to contribute in support of this effort.

Applications shall include a program narrative statement which addresses the following:

1. The objectives, goals, and anticipated outcomes of the proposed research effort;

2. The method or methods that will be used;

3. The source of the human surrogates be used:

4. The number, quality, and anticipated ages at death of the human surrogates the applicant expects to use for this research effort along with documentation that provides evidence that the applicant has access to the proposed quantity, quality, and projected ages of the experimental material (because NHTSA has interest in obtaining knowledge of the impact injury process and its effort on the total automotive-population-at-risk, an experimental human subject pool with ages representative of this population is highly desirable);

5. The proposed program director and other Key personnel identified for participation in the proposed research effort, including a description of their qualifications and their respective organizational responsibilities;

6. A description of the general, as well as specialized impact simulation, test facilities and equipment (including sled impact systems, component test systems, and data acquisition systems with high channel capabilities) currently available or to be obtained for use in the conduct of the proposed research effort; and

7. A Description of the applicant's previous experience or on-going research program that is related to this proposed research effort.

Review Process and Criteria

Initially, all applications will be reviewed to confirm that the applicant is an eligible recipient and to assure that the application contains all of the information required by the Application Contents section of this notice. Each complete application from an eligible recipient will then be evaluated by a Technical Evaluation Committee. The applications will be evaluated using the following criteria:

1. The applicant's understanding of the purpose and unique problems represented by the research objectives of this cooperative agreement program as evidenced in the description of their proposed research effort. Specific attention shall be placed upon the applicant's stated means for obtaining the quantity of experimental material necessary to conduct the proposed research effort.

2. The potential of the proposed research effort accomplishments to make an innovative and/or significant contribution to the base of biomechanical knowledge as it may be applied to saving lives and reducing injuries resulting from motor vehicle crashes.

3. The technical merit of the proposed research effort, including the feasibility of the approach, planned methodology, and anticipated results.

4. The adequacy of test facilities and equipment identified to accomplish the proposed research effort, including impact simulation.

5. The adequacy of the organizational plan for accomplishing the proposed research effort, including the qualifications and experience of the research team, the various disciplines represented, and the relative level of effort proposed for professional, technical, and support staff.

Award Selection Factors

The award selection may be based solely on the evaluation results. Award preference may be given to an innovative or creative approach that offers a potentially significant contribution to achieve the specific objectives of this cooperative research effort. Award preference may be given to a proposal with a larger percentage of cost sharing.

Terms and Conditions of the Award

1. The protection of the rights and welfare of human subjects and the ethical use of human surrogates in NHTS-sponsored research is governed by NHTSA Orders 700–1 through 700–4. Any recipient must satisfy the requirements and guidelines of these NHTSA Orders prior to award of the cooperative agreement. A copy of NHTS Orders 770–1 through 700–4 may be obtain from the programmatic information contact designated in this notice.

2. Prior to award, each recipient must comply with the certification requirements of 49 CFR Part 29—Department of Transportation Government-wide Department and Suspension (Nonprocurement) and Government-wide Requirements for Drug-Free Workplace (Grants), as well as CFR Part 200-Department of Transportation New Restrictions on Lobbying.

3. During the effective period of the cooperative agreement(s) awarded as a result of this notice, each agreement shall be subject to the general administrative requirements of the requirements of 49 CFR Part 19, 20 and 29, the cost principles of OMB Circular A–21, A–122, or FAR 31.2 as applicable to the recipient, and the NHTS General Provisions for Assistance Agreements.

Issued On: August 6, 1998.

Acting Associate Administrator for Research and Development.

Joseph N. Kanianthra,

[FR Doc. 98–21590 Filed 8–12–98; 8:45 am]

BILLING CODE 4910–59–M

DEPARTMENT OF TRANSPORTATION

Surface Transportation Board

[STB Finance Docket No. 33634]

Sunbelt Railroad Historical Trust—Acquisition Exemption—Lines of the Southeast Kansas Railroad Company

Sunbelt Railroad Historical Trust (SRHT), a noncarrier, has filed a notice of exemption under 49 CFR 1150.31 to acquire approximately 35.99 miles of rail line from the Southeast Kansas Railroad Company (SEK), between milepost 152.01, near Tulsa, OK, and milepost 188.00, near Barnsdall, OK. SRHT will not acquire the right to operate any freight service on the line, but will provide excursion passenger service. On Line Rail Services Company, Inc. (OLRS) will be the operator of freight service on the line.[1]

The transaction was scheduled to be consummated on or shortly after July 21, 1998.

If the notice contains false or misleading information, the exemption is void *ab initio.* Petitions to revoke the exemption under 49 U.S.C. 10502(d) may be filed at any time. The filing of a petition to revoke does not automatically stay the transaction.

An original and 10 copies of all pleadings, referring to STB Finance Docket No. 33634, must be filed with the Surface Transportation Board, Office of the Secretary, Case Control Unit, 1925 K Street, N.W., Washington, DC 20423–0001. In addition, a copy of each pleading must be served on Karl Morell, BALL JANIK LLP, 1455 F Street, NW., Suite 225, Washington, DC 20005.

Board decisions and notices are available on our website at ''WWW.STB.DOT.GOV.''

Decided: August 6, 1998.

By the Board, David M. Konschnik, Director, Office of Proceedings.

Vernon A. Williams,

Secretary.

[FR Doc. 98–21753 Filed 8–12–98; 8:45 am]

BILLING CODE 4915–00–P

DEPARTMENT OF THE TREASURY

Customs Service

[T.D. 98–68]

Revocation of Customs Broker License

AGENCY: U.S. Customs Service, Department of the Treasury.

ACTION: Broker License Revocation.

Notice is hereby given that the Commissioner of Customs, pursuant to Section 641, Tariff Act of 1930, as amended, (19 U.S.C. 1641), and Parts 111.52 and 111.74 of the Customs Regulations, as amended (19 CFR 111.52 and 111.74), is canceling the following Customs broker licenses without prejudice.

Port	Individual	License No.
Seattle	C & Y International	11796
New York	J.D. Smith Customs Brokers, Inc	04853
New York	JCM Air Sea, Ltd	10061
New York	Import Express Services, Inc	13517
Dallas	Ericson, Inc.	11815

[1] OLRS will apparently be filing a notice of exemption to operate the line.

Dated: August 10, 1998.

Philip Metzger,

Director, Trade Compliance.

[FR Doc. 98–21737 Filed 8–12–98; 8:45 am]

BILLING CODE 4820–02–P

UNITED STATES INFORMATION AGENCY

Regional Investment Initiative (RII) Internet Project in Samara Oblast: Public Access Internet Sites, Training and Development of Internet Resources

ACTION: Notice—Request for proposals.

SUMMARY: The Office of Academic Programs, Academic Exchanges Division, European Programs Branch of the United States Information Agency's Bureau of Educational and Cultural Affairs announces an open competition for an assistance award. Public and private non-profit organizations with at least four years experience administering international exchange and training programs and demonstrated experience administering Internet projects in the Russian Federation and meeting the provisions described in IRS regulation 26 CFR 1.501(c) may apply to develop the Regional Investment Initiative (RII) Internet Project in Samara Oblast.

For the RII Internet Project in Samara Oblast, USIA seeks proposals that would: Establish and/or enhance at least five non-commercial public access Internet sites at libraries, universities or other RII partner institutions in Samara and Togliatti designated by the United States Information Service in Moscow with the concurrence of the oblast administration; Train staff of the partner institutions to manage and maintain the public access Internet sites; Provide e-mail and Internet training to diverse groups of end-users, including participants in and alumni of USIA and other U.S. government-sponsored programs; Develop, adapt, or identify Russian language training materials for individual and group instruction and training of trainer courses at public access Internet sites; Publicize the project to target audiences; Organize a series of topical seminars designed to attract target audiences to the public access Internet sites, and; Administer a small grants competition for the development of Internet materials in Russian and English that further higher education and professional training in business, law, public administration, and transparency of governance.

Proposals should reflect a thorough understanding of the telecommunications infrastructure in Samara Oblast, technical requirements for implementing all aspects of the project including procurement of appropriate equipment and services required to connect partner institutions to the Internet and establish non-commercial public access Internet sites, and the political, economic, and social environment in which the program activity will take place.

The goal of the RII Internet Project is to foster free and open access to Internet-based information resources and facilitate the dissemination of useful online information in Russian and English to students, professors and practitioners of business, law, public administration, non-governmental organizations and other constituencies in Samara and Togliatti that promote and support Russian-American cooperation and communication. The Regional Investment Initiative is a new program to expand trade and investment between Russia's regions and the U.S., foster U.S.-Russia economic, social, and community-based linkages, and coordinate U.S. government assistance in the Russian Federation. USIA expects the Internet project to achieve results on two levels: by building institutional capacity in Samara and Togliatti and by empowering end-users to obtain and publish online information resources, such as Web sites, newsletters, and listservs in business, law, public administration and related educational and professional fields. Applicant organizations must include a plan with clear benchmarks that demonstrates how permanent results will be achieved, monitored, and reported to USIA as a result of the activities funded by the grant.

Successful applicant organizations will be required to work in ongoing consultation with the United States Information Service in Moscow, the State Department's Regional Investment Initiative Coordinator in Samara, and the United States Information Agency in Washington to ensure effective implementation of project activities.

Interested organizations should read the complete **Federal Register** Announcement and request a Solicitation Package from USIA prior to preparing a proposal and should consult with USIA and USIS Moscow about the proposed partner institutions for public access Internet sites in Samara and Togliatti before submitting a proposal.

Applicant organizations may apply to administer the Project individually or as a consortium, via a subcontract arrangement, as long as one organization is designated to be the recipient of the grant. USIA anticipates awarding one assistance award in an amount not to exceed $350,000 for the implementation of this Project for a period of 20 months. The award is expected to begin in late October 1998. Project activities should be completed by June 30, 2000.

Overall grant making authority for this program is contained in the Mutual Educational and Cultural Exchange Act of 1961, Public Law 87–256, as amended, also known as the Fulbright-Hays Act. The purpose of the Act is ''to enable the Government of the United States to increase mutual understanding between the people of the United States and the people of other counties . . .; to strengthen the ties which unite us with other nations by demonstrating the educational and cultural interests, developments, and achievements of the people of the United States and other nations . . . and thus to assist in the development of friendly, sympathetic and peaceful relations between the United States and the other countries of the world.''

The funding authority for the project is provided through the Freedom for Russia and Emerging Eurasian Democracies and Open Markets Act of 1992 (Freedom Support Act). The legislation was established to assist the economic and democratic development of the New Independent States of the former Soviet Union. Programs and projects must conform with Agency requirements and guidelines outlined in the Solicitation Package.

Announcement Title and Number: All communications with USIA concerning this RFP should refer to the announcement's title and reference number E/AEE–99–01.

Deadline for Proposals: All copies must be received at the U.S. Information Agency by 5 p.m. Washington, DC time on Thursday September 17, 1998. Faxed documents will not be accepted at any time. Documents postmarked by the due date but received at a later date will not be accepted. It is the responsibility of the applicant to ensure that proposals are received by the above deadline.

FOR FUTHER INFORMATION CONTACT: The Office of Academic Programs, Academic Exchanges Division, European Programs Branch, E/AEE, Room 246, U.S. Information Agency, 301 4th Street, SW., Washington, DC 20547; telephone number (202) 205–0525; fax: (202) 260–7985 to request a Solicitation Package containing more detailed award criteria. Please request required application forms, and standard guideline for preparing proposals, including specific criteria for preparation of the proposal budget.

To Download a Solicitation Package via Internet: The entire Solicitation

Package may be downloaded from USIA's website at http://www.usia.gov/education/rfps. Please read all information before downloading.

To Receive a Solicitation Package via Fax on Demand: The entire Solicitation Package may be received via the Bureau's ''Grants Information Fax on Demand System'', which is accessed by calling 202/401/7616. Please request a ''Catalog'' of available documents and order numbers when first entering the system.

Please specify USIA Program Manager Rhonda E. Boris on all inquiries and correspondences. Interested applicants should read the complete **Federal Register** announcement before sending inquiries or submitted proposals. Once the RFP deadline has passed, Agency staff may not discuss this competition in any way with applicants until the Bureau proposal review process has been completed.

Submissions: Applicants must follow all instructions given in the Solicitation Package. The original and 9 copies of the application should be sent to: U.S. Information Agency, Ref.: E/AEE–99–01, Office of Grants Management, E/XE, Room 326, 301 4th Street, S.W., Washington, D.C. 20547.

Applicants must also submit the ''Executive Summary'' and ''Proposal Narrative'' sections of the proposal on a 3.5″ diskette, formatted for DOS. This material must be provided in ASCII text (DOS) format with a maximum line length of 65 characters. USIA will transmit these files electronically to our overseas posts for review, with the goal of reducing the time it takes to get posts' comments for the Agency's grant review process.

Diversity, Freedom and Democracy Guidelines: Pursuant to the Bureau's authorizing legislation, programs must maintain a non-political character and should be balanced and representative of the diversity of American political, social, and cultural life. ''Diversity'' should be interpreted in the broadest sense and encompass differences including, but not limited to ethnicity, race, gender, religion, geographic location, socio-economic status, and physical challenges.

Applicants are strongly encouraged to adhere to the advancement of this principle both in program administration and in program content. Please refer to the review criteria under the 'Support for Diversity' section for specific suggestions on incorporating diversity into the total proposal. Public Law 104–319 provides that ''in carrying out programs of educational and cultural exchange in countries whose people do not fully enjoy freedom and democracy'', USIA ''shall take appropriate steps to provide opportunities for participation in such programs to human rights and democracy leaders of such countries.'' Proposals should account for advancement of this goal in their program contents, to the full extent deemed feasible.

SUPPLEMENTARY INFORMATION: The Samara Regional Investment Initiative Internet Project is intended to be a collaborative effort between the U.S. and Russian governments, regional authorities and public and private sector organizations of both countries. Applicant organization must demonstrate the ability to collaborate with other organizations that support Internet projects in Samara Oblast and U.S. and Russian scholarly, educational, and professional organizations in fields such as business, law, and public administration. Such collaboration is intended to ensure the dissemination of high quality information to the USIA's designated audiences, expand the scope and impact of USIA grant funding, maximize resources, avoid duplication of effort, and lay the groundwork for sustaining Internet access costs beyond the USIA funding period.

Partner institutions for public access Internet sites may include, but should not be limited to, the Samara Oblast Public Library, the Samara State Aerospace University, the Togliatti Public Library, and the Togliatti International Business and Banking Academy. USIA expects applicant organizations and all institutions participating in the project to provide significant in-kind contributions and cost-sharing, such as facilities and services required for the public access Internet sites, existing network and computer equipment, connectivity, designated staff, staff time, volunteers, and training materials, as appropriate. Proposals should include evidence of the in-kind contributions or direct cost-sharing to be provided by potential partner institutions, Internet service providers, and other organizations interested in collaborating on the project.

USIA encourages applicant organizations to include the following supplementary materials: A feasible and realistic plan for expanding connectivity that builds on existing infrastructure and networks; Draft partnership agreements with institutions designated for public access Internet sites; Proposed equipment packages, services, staff coverage, Internet service provider, security, and hours of operation for each public access site; Sample training program, courses, topics, and materials for staff of partner institutions, individual and group instruction for end-users; curriculum for training of trainer program; Draft program announcements, publicity plans, and methodology for community outreach; Proposed topics and structure of seminar series; Concept paper for administration of small grants competition to develop Internet-based information resources and draft grant application which cites eligibility requirements and selection criteria; Position descriptions for project team members; Other materials that are reasonable and appropriate.

Guidelines

Administration of the program must be in compliance with reporting and withholding regulations for federal, state, and local taxes as applicable. Organizations should demonstrate tax regulation adherence in the proposal. Procurement of required computer and networking equipment and applications software must be in compliance with year 2000 requirements (Y2K). Applicant organizations should demonstrate compliance with Y2K requirements in the proposal.

Proposed Budget

Funding for the Regional Investment Initiative Internet Project in Samara Oblast is anticipated at $350,000. Applicant organizations must submit a comprehensive line item budget request for program costs and administrative costs based on the specific guidance on the Solicitation Package. There must be a summary budget as well as a break-down reflecting both the administrative budget and the program budget and a budget narrative demonstrating how costs were derived. Organizations whose proposals include an administrative budget that is less than 20% of the grant amount requested from the USIA will be considered competitive.

Allowable program costs include, but are not limited to, equipment and services required to build on existing networks and infrastructure in order to expand connectivity to the beneficiaries of the project, and to provide low-cost high speed sustainable access to the Internet for the public access Internet sites; required workstations, hardware, software, peripherals, training materials, services, and supplies to establish or enhance public access Internet sites; monthly Internet access fees (if required); salaries to support project team members; materials for seminar series; honorarium for selection committee for grants competition to

develop Internet resources; consultants to provide specialized expertise or to make presentations.

Allowable administrative costs would include staff salary and benefits, staff travel to project sites; office expenses, communications, and shipping. Please refer to the Solicitation Package for complete budget guidelines and formatting instructions.

Review Process

USIA will acknowledge receipt for all proposals and will review them for technical eligibility. Proposals will be deemed ineligible if they do not fully adhere to the guidelines stated herein and in the Solicitation Package. Eligible proposals will be forwarded to panels of USIA officers for advisory review. All eligible proposals will be reviewed by the program office, as well as the USIA Office of East European and NIS Affairs and the USIA post overseas, where appropriate. Proposals may be reviewed by the Office of the General Counsel or by other Agency elements. Funding decisions are at the discretion of the USIA Associate Director for Educational and Cultural Affairs. Final technical authority for assistance awards (grants or cooperative agreements) resides with the USIA grants officer.

Review Criteria

Technical eligible applications will be competitively reviewed according to the criteria stated below. These criteria are not rank ordered and all carry equal weight in the proposal evaluation:

1. Program planning and ability to achieve objectives: Program objectives should be stated clearly and precisely and should reflect the applicant organization's experience administering Internet projects and training programs in the Russian Federation. Objectives should respond to the project activities cited in this announcement and should relate to the current state of connectivity, Internet access, and training available in libraries, universities, and NGOs in Samara Oblast. A detailed work plan should explain step by step how objectives will be achieved and include a timetable for completion of all critical technical and programmatic components of the project. The training methodology and curriculum should be discussed in detail. Responsibilities of all partners should be clearly described.

2. Institutional capacity: Proposed personnel and organizational resources must be adequate and appropriate to implement the project. The narrative must demonstrate proven ability to handle the technical and programmatic requirements of the project, including a knowledge of useful Internet resources in English and Russian in business, law, and public administration, and to effectively coordinate logistics and project components with diverse Russian and U.S. public and private sector organizations.

3. Organization's track record: Relevant USIA and outside assessments of the organization's experience with academic exchange and training programs and Internet projects in Russia, including responsible fiscal management and full compliance with all reporting requirements for past grants as determined by USIA's Office of Contracts.

4. Multiplier effect/impact: Proposed programs must demonstrate an impact on the wider community through the sharing of information and the establishment of long-term institutional and individual linkages.

5. Cost-effectiveness: Overhead and program and administrative costs, including required equipment, services, connectivity, salaries, and honoraria, should be kept as low as possible. All other items should be necessary and appropriate. Preference will be given to proposals that leverage existing resources in Samara Oblast, maximize in-kind contributions and cost-sharing through other U.S. and/or Russian public and private sector partners as well as institutional direct funding contributions, and submit an administrative budget that is less than 20% of the grant amount requested from the USIA.

6. Support of diversity and pluralism: Proposals should demonstrate substantive support of the Bureau's policy on diversity throughout the program.

7. Program evaluation: USIA is results-oriented. Proposals must include a plan to evaluate the project's success, both as the activities unfold at each public access Internet site and at the end of the project. A draft survey questionnaire plus a description of a methodology to be used to link outcomes to original project objectives is required. USIA recommends that the proposal include draft questions for focus groups for staff and end-users at the public access Internet sites.

Notice

The terms and conditions published in this RFP are binding and may not be modified by any USIA representative. Explanatory information provided by the Agency that contradicts published language will not be binding. Issuance of the RFP does not constitute an award commitment on the part of the Government. The Agency reserves the right to reduce, revise, or increase proposal budgets in accordance with the needs of the program and the availability of funds. Awards made will be subject to periodic reporting and evaluation requirements.

Notification

Final awards cannot be made until funds have been appropriated by Congress, allocated and committed through internal USIA procedures.

Dated: August 7, 1998.

James D. Whitten,

Acting Associate Director for Educational and Cultural Affairs.

[FR Doc. 98–21792 Filed 8–12–98; 8:45 am]

BILLING CODE 8230–01–M

UTAH RECLAMATION MITIGATION AND CONSERVATION COMMISSION

Notice of Availability of the Draft Environmental Assessment for the Angler-Access Mitigation Program Strawberry Aqueduct and Collection System, Bonneville Unit, Central Utah Project

AGENCY: The Utah Reclamation Mitigation and Conservation Commission (Mitigation Commission).

ACTION: Notice of availability of the draft environmental assessment.

SUMMARY: The purpose of the Proposed Action is to complete several mitigation obligations that were identified as mitigation for the construction and operation of the Bonneville Unit of the Central Utah Project. As originally planned in 1965, construction of the Bonneville Unit was estimated to inundate approximately 40 miles of stream habitat and adversely impact an additional 240 miles of streams by altering stream flows. It was estimated that 73 percent of the adult trout habitat on impacted streams would be lost as a result of constructing and operating the Strawberry Aqueduct and Collection System (SACS), a feature of the Bonneville Unit. To mitigate for these impacts, several mitigation obligations were identified. Although the emphasis of this Draft Environmental Assessment is achieving angler access, several other mitigation measures are addressed. The mitigation obligations that are addressed by the Proposed Action are as follows:

- The 1988 Aquatic Mitigation Plan for the Bonneville Unit identified the acquisition of 51 miles of angler access on seven impacted streams as partial mitigation for the construction and operation of SACS. Approximately 42.25 of the 51 miles identified for angler-access acquisition have already

been acquired. Under the Proposed Action, the remaining access would be acquired.

- The 1987 Wildlife Mitigation Plan for the Bonneville Unit identified measures to mitigate for impacts on terrestrial wildlife from the construction and operation of the Bonneville Unit of the Central Utah Project. The Wildlife Mitigation Plan identified the acquisition and management of 32,096 acres of terrestrial wildlife habitat as mitigation. All but 388 acres has previously been acquired, primarily within or adjacent to the angler-access corridors. Under the Proposed Action, all or a portion of the remaining 388 acres of terrestrial wildlife would be acquired. In addition, the Proposed Action would establish a management direction consistent with the mitigation requirements.
- The 1987 Wetland Mitigation Plan for the Bonneville Unit identified measures to mitigate for impacts on wetlands from the construction and operation the Bonneville Unit. An analysis of wetland losses showed that the construction of Jordanelle Dam and Reservoir and associated highway relocations would result in a loss of approximately 153 acres of emergent wetlands consisting of both open meadows and shrub meadows. The Wetland Mitigation Plan for the Bonneville Unit identifies, among other things, protection and enhancement of 26.6 acres of wetlands on Currant Creek, 14.76 acres on the middle Strawberry River, and 85.1 acres on Rock Creek, within the angler-access corridors, as partial mitigation for these impacts. Under the Proposed Action, additional wetland acres would be acquired for this purpose. In addition, the management direction would be established to ensure wetland areas are managed to protect and enhance their wetland values.

DATES: Comments are most useful if received by September 8, 1998.

FOR FURTHER INFORMATION: Copies of the the Draft Environmental Assessment or Executive Summary can be obtained at the address and telephone number below: Richard Mingo, Natural Resource Specialist, Utah Reclamation Mitigation and Conservation Commission, 102 West 500 South, Suite 315, Salt Lake City, UT 84101–2328, Telephone: (801) 524–3146.

Dated: August 6, 1998.

Michael C. Weland,

Executive Director, Utah Reclamation Mitigation and Conservation Commission.

[FR Doc. 98–21771 Filed 8–12–98; 8:45 am]

BILLING CODE 4310–05–P

DEPARTMENT OF VETERANS AFFAIRS

Veterans' Advisory Committee on Rehabilitation, Notice of Meeting

The Department of Veterans Affairs (VA) gives notice under Public Law 92–463 that a meeting of the Veterans' Advisory Committee on Rehabilitation (VACOR), authorized by 38 U.S.C., Section 3121, will be held September 23rd through 25th, 1998. The meeting will be held in room #730 at VA Central Office, 810 Vermont Avenue NW, Washington, DC 20420. The purpose of the meeting is to provide the Committee with current information regarding the reorganization of the VA's Health and Benefits Administrations, determine how these service-delivery changes may potentially impact on the rehabilitation of disabled veterans, and generate change recommendations, if needed, to ensure the effectiveness of the VA's programs of veteran rehabilitation. In addition, the committee will be informed of the new Vocational Rehabilitation and Counseling (VR&C) Quality Assurance Program, outside contracting for rehabilitation services, and review of preliminary findings made by the Commission on Servicemembers and Veterans Transition Assistance.

The September 23rd meeting will begin at 9:00 a.m. Prior to a full discussion of the VR&C Quality Assurance program, the VA's Deputy Ethics Official will assist members in completing financial disclosure forms and updating prior year form submissions. The afternoon session will focus on the reorganization of service delivery in the VA Health and Benefits Administrations. A 3:45 p.m. adjournment time is anticipated.

On September 24th, the Committee will reconvene at 9:00 a.m. and hear a presentation from the Chairman of the Commission on Servicemembers and Veterans Assistance Transition regarding preliminary Committee findings relative to the VA's Vocational Rehabilitation and Counseling program. Following that presentation, spokespersons from the Vocational Rehabilitation & Counseling program will address the issues of outside contracting for rehabilitation services and current program activities designed to more effectively market VR&C initiatives and successes within both the VA and the community at large. A 3:45 p.m. adjournment will follow a review of implications for future program directions based on information received. The September 25th meeting will begin at 9:00 a.m. and will focus on general Committee findings, the generation of specific recommendations for program changes, and a discussion of future meetings, potential meeting locations and future agenda topics. Adjournment will follow at approximately 12:00 noon.

All meetings will be open to the general public. Oral statements will be received by the general public on September 25th at 9:00 a.m.

Anyone having questions concerning the meeting may contact Frank J. Donlan, Counseling Psychologist, Department of Veterans Affairs, at (202) 273–7436.

Dated: August 3, 1998.

By Direction of the Secretary.

Heyward Bannister,

Committee Management Officer.

[FR Doc. 98–21698 Filed 8–12–98; 8:45 am]

BILLING CODE 8320–01–M

Corrections

Federal Register

Vol. 63, No. 156

Thursday, August 13, 1998

This section of the FEDERAL REGISTER contains editorial corrections of previously published Presidential, Rule, Proposed Rule, and Notice documents. These corrections are prepared by the Office of the Federal Register. Agency prepared corrections are issued as signed documents and appear in the appropriate document categories elsewhere in the issue.

DEPARTMENT OF DEFENSE

48 CFR Part 242

[DFARS Case 97-D012]

Defense Federal Acquisition Regulation Supplement; Contractor Insurance/Pension Reviews

Correction

In rule document 98–20187 beginning on page 40374 in the issue of Wednesday, July 29, 1998, make the following correction:

242.7301 [Corrected]

On page 40374, in the second column, in amendatory instruction 2., in the first line, ''and'' should read ''through''.

BILLING CODE 1505-01-D

ENVIRONMENTAL PROTECTION AGENCY

40 CFR Part 52

[FRL–6131–6]

RIN 2060–ZA02

Promulgation of Federal Implementation Plan for Arizona—Phoenix PM–10 Moderate Area; Disapproval of State Implementation Plan for Arizona— Phoenix PM–10 Moderate Area

Correction

In rule document 98–20147 beginning on page 41326, in the issue of Monday, August 3, 1998, make the following correction:

Appendix A to § 52.128 [Corrected]

1. On page 41355, in the third column, in Table 1, under ''TFV'', in the first line, ''≤100'' should read ''>100''.

2. On page 41356, in the third column, in the 18th line, after ''this'' insert ''Appendix''.

BILLING CODE 1505-01-D

DEPARTMENT OF HEALTH AND HUMAN SERVICES

Office of the Inspector General

42 CFR Part 1008

RIN 0991–AA85

Medicare and State Health Care Programs: Fraud and Abuse; Issuance of Advisory Opinions by the OIG

Correction

In rule document 98–18874, beginning on page 38311, in the issue of Thursday, July 16, 1998, make the following correction:

§ 1008.39 [Corrected]

On page 38325, in the third column, the section heading following amendatory instruction 11 should read ''**§ 1008.39 Additional Information.**''

BILLING CODE 1505-01-D

SECURITIES AND EXCHANGE COMMISSION

[Release No. 34-40186; File No. SR-CBOE-98-20]

Self-Regulatory Organizations; Notice of Filing of Proposed Rule Change by the Chicago Board Options Exchange, Inc. and Amendment No. 1 Thereto Relating to RAES Eligibility Requirements for OEX and DJX Options

July 9, 1998.

Correction

In notice document 98–18905 beginning on page 38441 in the issue of Thursday, July 16, 1998, the date should read as set forth above.

BILLING CODE 1505-01-D

SECURITIES AND EXCHANGE COMMISSION

[Release No. 34-40187; File No. SR-CHX-98-13]

Self-Regulatory Organizations; Notice of Filing of Proposed Rule Change by The Chicago Stock Exchange, Inc. Amending the Exchange's Clearing the Post Policy for Cabinet Securities

July 9, 1998.

Correction

In notice document 98–18906 beginning on page 38442 in the issue of Thursday, July 16, 1998, the date should read as set forth above.

BILLING CODE 1505-01-D

federal register

Thursday
August 13, 1998

Part II

Department of Labor

Occupational Safety and Health Administration

29 CFR Part 1926

Safety Standards for Steel Erection; Proposed Rule

DEPARTMENT OF LABOR

Occupational Safety and Health Administration

29 CFR Part l926

[Docket No. S–775]

RIN No. 1218–AA65

Safety Standards for Steel Erection

AGENCY: Occupational Safety and Health Administration (OSHA), U.S. Department of Labor.

ACTION: Proposed rule; Notice of hearing.

SUMMARY: The Occupational Safety and Health Administration (OSHA) proposes to revise the construction industry safety standards addressing steel erection. The intent of this revision is to enhance the protections provided to workers engaged in steel erection and to update and strengthen the general provisions that address steel erection. This proposal contains requirements for hoisting and rigging, structural steel assembly, beam and column connections, joist erection, pre-engineered metal building erection, fall protection and training. The proposed requirements address significant hazards in the steel erection industry. The principal hazards addressed by this proposal are those associated with working under loads; hoisting, landing and placing decking; column stability; double connections; hoisting, landing and placing steel joists; and falls to lower levels. Notice is also given of an informal public hearing.

DATES: Written comments on the proposed rule and notices of intention to appear at the informal public hearing on the proposed rule must be postmarked by November 12, 1998. Parties who request more than 10 minutes for their presentations at the informal public hearing and parties who will submit documentary evidence at the hearing must submit the full text of their testimony and all documentary evidence postmarked no later than November 17, 1998. The hearing will take place in Washington, DC and is scheduled to begin on December 1, 1998.

ADDRESSES: Comments on the proposal are to be submitted in quadruplicate or 1 original (hardcopy) and 1 disk (5¼ or 3½) in WP 5.0, 5.1, 6.0, 6.1, 8.0 or ASCII to: the Docket Officer, Docket S–775, U.S. Department of Labor, Occupational Safety and Health Administration, Room N2625, 200 Constitution Avenue, N.W., Washington, D.C. 20210, (202) 219–7894. Written comments of 10 pages or less may be transmitted by facsimile (fax) to the Docket Office at (202) 219–5046, provided an original and three (3) copies are sent to the Docket Office thereafter. Comments may be submitted electronically by e-mail to steelerection@osha-no.osha.gov. If the e-mail contains attached electronic files, the files must be in WordPerfect 5.0, 5.1, 6.0, 6.1, 8.0 or ASCII. When submitting a comment by e-mail, please include your name and address.

Any information not contained on the disk or in the e-mail (e.g., studies, articles) must be submitted in quadruplicate. Specific comments on the collection of information requirements may also be submitted to: The Office of Information and Regulatory Affairs, Attn: OMB Desk Officer for OSHA, Office of Management and Budget, Room 10235, Washington, DC 20503, (202) 395–7316.

Notices of intention to appear at the hearing, and testimony and documentary evidence which will be introduced into the hearing record, must be submitted in quadruplicate to: the Docket Officer, Docket S–775, U.S. Department of Labor, Occupational Safety and Health Administration, Room N2625, 200 Constitution Avenue, N.W., Washington, D.C. 20210, (202) 219–7894. The hearing will be held in Washington, D.C., beginning December 1, 1998 at 10:00 a.m. in the Auditorium of the Frances Perkins Building, U.S. Department of Labor, 200 Constitution Avenue, N.W., Washington, D.C. 20210.

FOR FURTHER INFORMATION CONTACT: Office of Information and Consumer Affairs, OSHA, U.S. Department of Labor, Room N3647, 200 Constitution Avenue, N.W., Washington D.C. 20210, (202) 219–8151.

For an electronic copy of this **Federal Register** notice, contact the Labor News Bulletin Board, (202) 219–4784 (callers must pay any toll-call charges. 300, 1200, 2400, 9600 or 14,400 BAUD; Parity: None; Data Bits = 8; Stop Bit = 1. Voice phone (202) 219–8831); or OSHA's Webpage on Internet at http://www.osha.gov/ and http://www.osha-slc.gov/. For news releases, fact sheets, and other documents, contact OSHA FAX at (900) 555–3400 at $1.50 per minute.

SUPPLEMENTARY INFORMATION:

I. Background

Congress amended the Contract Work Hours and Safety Standards Act (CWHSA) (40 U.S.C. 327 *et seq.*) in 1969 by adding a new Section 107 (40 U.S.C. 333) to provide employees in the construction industry with a safer work environment and to reduce the frequency and severity of construction accidents and injuries. The amendment, commonly known as the Construction Safety Act (CSA) [P.L. 91–54; August 9, 1969], significantly strengthened employee protection by providing for occupational safety and health standards for employees of the building trades and construction industry in Federal and Federally-financed or Federally-assisted construction projects. Accordingly, the Secretary of Labor issued Safety and Health Regulations for Construction in 29 CFR Part 1518 (36 FR 7340, April 17, 1971) pursuant to Section 107 of the Contract Work Hours and Safety Standards Act.

The Occupational Safety and Health Act (the Act) (84 Stat. 1590; 29 U.S.C. 651 *et seq.*), was enacted by Congress in 1970 and authorized the Secretary of Labor to adopt established Federal standards issued under other statutes, including the CSA, as occupational safety and health standards. Accordingly, the Secretary of Labor adopted the construction standards which had been issued under the CSA, in accordance with Section 6(a) of the Act (36 FR 10466, May 29, 1971). The Safety and Health Regulations for Construction were redesignated as Part 1926 of 29 CFR later in 1971 (36 FR 25232, December 30, 1971). Subpart R of Part 1926, currently entitled ''Steel Erection,'' incorporating §§ 1926.750 through 1926.752, was adopted as an OSHA standard during this process. The requirements in the existing standard cover flooring, steel assembly, bolting, plumbing-up and related operations. In 1974 a revision in the temporary flooring requirement was made pursuant to a rulemaking conducted under section 6(b) of the Act (39 FR 24361).

Since that time, OSHA has received several requests for clarification of various provisions, including those pertaining to fall protection. The Agency began drafting a proposed rule to revise several provisions of its steel erection standard in 1984 and on several occasions discussed its intention with its Advisory Committee on Construction Safety and Health (ACCSH). During these discussions, the fall protection requirements of the standard often aroused controversy. The discussions with ACCSH led to the development of several draft notices requesting information or proposing changes to the rule. None of these draft notices was published, nor was public comment sought, except through the proceedings of the Advisory Committee.

In 1986, the Agency issued a Notice of Proposed Rulemaking for subpart M (Fall Protection) and announced that it

intended the proposed rule to apply to all walking/working surfaces found in construction, alteration, repair (including painting and decorating), and demolition work, except for five specific areas. Although none of the specific areas pertained to steel erection, the Agency noted that ''Additional requirements to have fall protection for connectors and for workers on derrick and erection floors during steel erection would remain in subpart R—Steel Erection.''

This statement led to confusion. Many of the commenters to the subpart M rulemaking noted that they were not sure whether subpart M or subpart R would govern their activities. In one case, two sets of comments were provided, one to be used if subpart M applied and the other if subpart R applied. In the face of this uncertainty, the Agency decided that it would regulate the fall hazards associated with steel erection in its planned revision of subpart R.

OSHA announced its intention to regulate the hazards associated with steel erection, and in particular the fall hazards associated with steel erection, in a notice published in the **Federal Register** on January 26, 1988 (53 FR 2048). In that notice OSHA stated the following:

> The rulemaking record developed to date indicates that the Agency needs more information in order to develop a revised standard covering fall protection for employees engaged in steel erection activities. The comments received to date have convinced the Agency to develop a separate proposed rule which will provide comprehensive coverage for fall protection in steel erection. OSHA intends, therefore, that the consolidation and revision of fall protection provisions in subpart M do not apply to steel erection and that the current fall protection requirements of Part 1926 continue to cover steel erection until the steel erection rulemaking is completed. Accordingly, in order to maintain coverage under existing fall protection standards pending completion of the separate steel erection fall protection rulemaking, OSHA plans to redesignate existing §§ 1926.104, 1926.105, 1926.107(b), 1926.107(c), 1926.107(f), 1926.500 (with Appendix A), 1926.501, and 1926.502 into subpart R when the Agency issues the final rule for the subpart M rulemaking.

Since that time, the Agency drafted several documents which it presented to ACCSH for comment. The Agency was also petitioned by affected parties to institute negotiated rulemaking. The first request for negotiated rulemaking was submitted to the Agency in 1990. At that time, it appeared the Agency would soon publish a Notice of Proposed Rulemaking in the **Federal Register** and, therefore, the request was denied. However, affected parties once again made their concerns known, and the Agency delayed publication of the NPRM while it made a further, more comprehensive study of the concerns raised.

OSHA retained an independent consultant to review the fall protection issues raised by the draft revisions to subpart R, to render an independent opinion on how to resolve the issues, and to recommend a course of action. In 1991, the consultant recommended that OSHA address the issue of fall protection as well as other potential revisions to subpart R by using the negotiated rulemaking process (Ex. 4–18A).

Based on this recommendation and continued requests for negotiated rulemaking by affected stakeholders, on December 29, 1992, OSHA published a **Federal Register** notice of intent to establish a negotiated rulemaking committee (57 FR 61860). The notice requested nominations for membership on the Committee and comments on the appropriateness of using negotiated rulemaking to develop a steel erection proposed rule. In addition, the notice described the negotiated rulemaking process and identified some key issues for negotiation.

In response to the notice of intent, OSHA received more than 225 submissions, including more than 60 nominations for membership on the Committee and several sets of comments. After an evaluation of the submissions, it was apparent that an overwhelming majority of commenters supported this action, and OSHA decided to go forward with the negotiated rulemaking process. The Agency selected the members of the Committee from among the nominations.

On May 11, 1994, OSHA announced that it had established the Steel Erection Negotiated Rulemaking Advisory Committee (SENRAC) (59 FR 24389) in accordance with the Federal Advisory Committee Act (FACA) (5 U.S.C. App. I), the Negotiated Rulemaking Act of 1990 (NRA) (5 U.S.C. 561 *et seq.*) and section 7(b) of the Occupational Safety and Health Act (OSH Act) (29 U.S.C. 656 (b)) to resolve issues associated with the development of a Notice of Proposed Rulemaking on Steel Erection. Appointees to the Committee included representatives from labor, industry, public interests and government agencies. OSHA was a member of the committee, representing the Agency's interests.

II. Establishing the Steel Erection Negotiated Rulemaking Advisory Committee (SENRAC)

Negotiated rulemaking is a process by which a proposed rule is developed through negotiation of differing viewpoints by a committee that is intended to be composed of representatives of all the interests that will be significantly affected by the rule. The negotiated rulemaking process is thus fundamentally different from OSHA's usual development process for proposed rules. Negotiation allows interested parties to discuss possible approaches to various issues rather than the Agency asking them to respond to the details of an OSHA draft proposal. The negotiation process involves a mutual education of the parties on the reasons for different positions on the issues as well as on the concerns about the practical impact of various approaches.

Each committee member participates in resolving the interests and concerns of other members instead of leaving it up to OSHA to bridge different points of view.

A key principle of negotiated rulemaking is that agreement is reached by consensus of all the interests. The NRA defines consensus as unanimous concurrence among the interests represented on a negotiated rulemaking committee, unless the committee itself unanimously agrees to use a different definition of consensus.

SENRAC was formed with particular attention to obtaining full and adequate representation of those interests that may be significantly affected by the proposed rule. Section 562 of the NRA defines the term ''interest'' as follows:

> ''interest'' means, with respect to an issue or matter, multiple parties which have a similar point of view or which are likely to be affected in a similar manner.

Particular care was taken to identify any unique interests which were determined to be significantly affected by the proposed rule and ensure that they were fully represented on the Committee.

The members of the Committee are: Richard Adams—Army Corps of Engineers, who was later replaced by Donald Pittinger; William W. Brown—Ben Hur Construction Company; Bart Chadwick—Regional Administrator, Region VIII, Occupational Safety and Health Administration (since retired); James E. Cole—International Association of Bridge, Structural & Ornamental Iron Workers; Stephen D. Cooper—International Association of Bridge, Structural & Ornamental Iron Workers; Phillip H. Cordova—El Paso

Crane & Rigging, Inc.; Perry A. Day—International Brotherhood of Boilermakers, Iron Ship Builders, Blacksmiths, Forgers & Helpers; James R. Hinson—J. Hinson Network, Inc.; Jim Lapping—Building and Construction Trades Department (AFL–CIO), replaced by Brad Sant and later replaced by Sandy Tillett; Richard King—Black & Veatch; John R. Molovich—United Steelworkers of America; Carol Murkland—Gilbane Building Company; John J. Murphy—Williams Enterprises of Georgia, Inc.; Steven L. Rank—Holton & Associates, Ltd.; Ray Rooth—CAL/OSHA; Alan Simmons—International Association of Bridge, Structural & Ornamental Iron Workers; William J. Smith—International Union of Operating Engineers; Ronald Stanevich—National Institute for Occupational Safety and Health (NIOSH) later replaced by Tim Pizatella, Division of Safety Research; C. Rockwell Turner—L.P.R. Construction Co.; and Eric Waterman—National Erectors Association.

SENRAC was chaired by Philip J. Harter, Esq., a trained facilitator. The role of the facilitator was to apply proven consensus building techniques to the OSHA advisory committee setting. This individual was not involved with the substantive development of the standard. Rather, the facilitator's role generally included:

(1) Chairing the meetings of the committee in an impartial manner;

(2) Impartially assisting the members of the committee in conducting discussions and negotiations;

(3) Acting as disclosure officer for committee records under the Freedom of Information Act (FOIA); and

(4) In accordance with FACA's requirements, keeping minutes of all committee meetings.

SENRAC consists of 20 members. Although these members represent particular interests, natural coalitions formed around particular issues, and certain members were identified as spokespersons for these coalitions.

Interested parties who were not selected to membership on the Committee were provided an opportunity to contribute to the negotiated rulemaking effort in the following ways:

(1) by being placed on the Committee mailing list and submitting written comments to the Committee as appropriate;

(2) by attending the Committee meetings, which were open to the public, caucusing with the SENRAC member representing his or her interest on the Committee, and addressing the Committee (usually allowed at the end of the discussion of an issue or the end of a session, as time permitted); and/or

(3) by participating in a workgroup established by the Committee.

Informal workgroups were established by SENRAC to assist the Committee in ''staffing'' various technical matters (e.g., researching or preparing summaries of the technical literature or commenting on particular matters before the Committee) to facilitate Committee deliberations. They also assisted in drafting regulatory text. The workgroups were made up of SENRAC members and other parties who had expertise or a particular interest in the technical matter(s) being studied.

SENRAC began negotiations in mid-June, 1994, and has met 11 times. Initial meetings dealt with procedural matters, including schedules, agendas and the establishment of workgroups. Workgroups addressed major issues, such as Scope, Fall Protection, Joists, Slippery Surfaces, Pre-Engineered Metal Buildings, and Cranes. During subsequent meetings, the foundations for negotiations were established and preliminary resolutions of issues were reached. Through negotiations at full Committee meetings and options developed by Committee workgroups, the Committee reached consensus on a proposed revision to the regulatory text for subpart R. This preamble addresses that text, which is the basis for OSHA's proposed rule.

During SENRAC negotiations, the Committee addressed some difficult issues. Particularly controversial was the relationship between the fall protection requirements of subpart M (OSHA's standard for Fall Protection in construction) and such requirements in the steel erection context. Subpart M was published in the **Federal Register** on August 9, 1994 (59 FR 40672), and became effective on February 6, 1995. Initially, that standard applied to steel erection in non-building structures such as tanks, towers and bridges but not to steel erection in buildings. On October 7, 1994, five steel erection companies petitioned OSHA for an administrative stay of final subpart M to the extent that the standard applied to steel erection activities. The companies alleged that they had not received fair notice that the requirements of subpart M would apply to steel erection in non-building structures such as bridges, tanks and towers and that, in consequence, they had not had the opportunity to comment on the issue. Subsequently, OSHA agreed to stay subpart M as it applied to such activities and announced this decision to SENRAC on December 8, 1994. The Committee was informed that the Agency had decided to consider fall protection standards for all steel erection activities in the subpart R rulemaking as part of the SENRAC process. OSHA also indicated that it intends to address any aspects of steel erection fall protection not ultimately addressed by SENRAC by proposing to include them under subpart M or in a separate regulation, after notice and comment.

On January 26, 1995, OSHA issued a notice in the **Federal Register** (60 FR 5131) delaying the application of subpart M to non-building steel erection activities until August 6, 1995. On August 2, 1995, OSHA published a follow-up notice in the **Federal Register** (60 FR 39254) amending subpart M to indicate that its provisions did not cover steel erection, and that requirements relating to fall protection for employees performing steel erection work are included in § 1926.105 and in subpart R. The notice also stated that, until such time as subparts M and R have been revised, the Agency's enforcement policy on fall protection during steel erection would be the policy outlined in Deputy Assistant Secretary James R. Stanley's July 10, 1995, memorandum to the Office of Field Programs, ''Fall Protection in Steel Erection'' (Ex. 9–13F)(see full discussion of this memo in the fall protection section below). The notice also noted the Agency's intention to conduct a supplemental rulemaking in the near future, to provide an opportunity for public comment on the extension of subpart M coverage to any steel erection activity that subpart R does not address.

OSHA believes that the proposed subpart R will help to reduce the significant risk of death and serious injury that has continued to confront workers engaged in steel erection activities. In addition, the clarified and revised language of the proposal will help employers and employees understand the requirements of the steel erection standard and will improve worker safety by clarifying and consolidating current requirements into a single set of provisions that will be easier for employers to understand. OSHA is also proposing changes and additions to the current rules to provide more protective requirements and to close gaps in the current rule's coverage of steel erection hazards. These proposed revisions have been achieved through the SENRAC negotiations, with active participation from workgroup members such as the Steel Joist Institute (SJI), American Institute for Steel Construction (AISC), Steel Erectors Association of America (SEAA), American Iron and Steel Institute (AISI), Metal Building Manufacturers

Association (MBMA), Steel Deck Institute (SDI), National Association of Miscellaneous, Ornamental and Architectural Products Contractors (NAMOA), the Institute of the Ironworking Industry (III), the Ironworkers Employers Associations of Washington, D.C. and Western Pennsylvania (IWEA), and the Allied Building Metal Industries. These organizations, although not members of the Committee, were able to contribute significantly to the negotiations through recommendations they made at various full Committee and workgroup meetings. This proposal has also been reviewed by OSHA's Advisory Committee on Construction Safety and Health (ACCSH). ACCSH was kept informed of SENRAC's progress throughout the negotiated rulemaking process and was given copies of the draft consensus regulatory text (Exs. 9–147, 9–148).

In summary, the SENRAC Committee was established by OSHA to negotiate a draft revision of the steel erection standard to serve as the basis for a proposed rule. The Committee and its workgroups met over an 18-month period and recommended a consensus document to OSHA. OSHA believes that the consensus document reflects the concerted effort of the entire steel erection community—steel erectors (both union and non-union); employee representatives; steel fabricators; major producers of domestic steel; manufacturers of steel joists, steel deck, steel coatings, pre-engineered metal buildings and safety equipment; insurance interests; safety consultants; and construction safety associations—to develop a comprehensive, workable and enforceable proposed standard for the safe erection of steel. In accordance with the Negotiated Rulemaking Act of 1990 and the Department of Labor's Negotiated Rulemaking Policy (57 FR 61925), the draft regulatory text and accompanying rationale presented to OSHA by the SENRAC Committee constitute the basis for this proposed rule.

In this Notice of Proposed Rulemaking (NPRM), OSHA provides notice to all affected employers and employees of these proposed revisions to subpart R, which the Agency believes are necessary to protect employees. OSHA believes the clarified language of the proposal will help employers to protect their employees more effectively and to comply more readily.

III. Pertinent Legal Authority

The purpose of the Occupational Safety and Health Act, 29 U.S.C. §§ 651 *et seq.* (''the Act''), is ''to assure so far as possible every working man and woman in the Nation safe and healthful working conditions and to preserve our human resources.'' 29 U.S.C. § 651(b). To achieve this goal, Congress authorized the Secretary of Labor to promulgate and enforce occupational safety and health standards (see 29 U.S.C. §§ 655(a) (authorizing summary adoption of existing consensus and federal standards within two years of Act's enactment), 655(b) (authorizing promulgation of standards pursuant to notice and comment), 654(b) (requiring employers to comply with OSHA standards)).

A safety or health standard is a standard ''which requires conditions, or the adoption or use of one or more practices, means, methods, operations, or processes, reasonably necessary or appropriate to provide safe or healthful employment'' (29 U.S.C. § 652(8)).

A standard is reasonably necessary or appropriate within the meaning of Section 652(8) if it substantially reduces or eliminates significant risk, and is economically feasible, technologically feasible, and cost effective, and is consistent with prior Agency action or is a justified departure, is supported by substantial evidence, and is better able to effectuate the Act's purposes than any national consensus standard it supersedes. See 58 FR 16612—16616 (March 30, 1993).

OSHA has generally considered, at minimum, a fatality risk of 1/1000 over a 45-year working lifetime to be a significant health risk. See the Benzene decision *Industrial Union Dep't* v. *American Petroleum Institute,* 448 U.S. 607, 646 (1980); the Asbestos decision *Building and Constr. Trades Dep't, AFL–CIO* v. *Brock,* 838 F.2d 1258, 1265 (D.C. Cir. 1988); the Formaldehyde decision *International Union, UAW* v. *Pendergrass,* 878 F.2d 389, 392 (D.C. Cir. 1989).

A standard is technologically feasible if the protective measures it requires already exist, can be brought into existence with available technology, or can be created with technology that can reasonably be expected to be developed. *American Textile Mfrs. Institute* v. *OSHA,* 452 U.S. 490, 513 (1981)(''*ATMI*''); *AISI* v. *OSHA,* 939 F.2d 975, 980 (D.C. Cir. 1991)(''*AISI*'').

A standard is economically feasible if industry can absorb or pass on the costs of compliance without threatening its long term profitability or competitive structure. See *ATMI,* 452 U.S. at 530 n. 55; *AISI,* 939 F.2d at 980. A standard is cost effective if the protective measures it requires are the least costly of the available alternatives that achieve the same level of protection. *ATMI,* 453 U.S. at 514 n. 32; *International Union, UAW* v. *OSHA,* 37 F.3d 665, 668 (D.C. Cir. 1994) (''*LOTO III*'').

Section 6(b)(7) authorizes OSHA to include among a standard's requirements labeling, monitoring, medical testing and other information gathering and transmittal provisions. 29 U.S.C. § 655(b)(7).

All standards must be highly protective. See 58 FR at 16614–16615; *LOTO III,* 37 F.3d at 669. Finally, whenever practical, standards shall ''be expressed in terms of objective criteria and of the performance desired.'' *Id.*

IV. Hazards in Steel Erection

Accidents during steel erection continue to cause injuries and fatalities at construction sites. Based on a review of compliance problems and public comments over the past several years, OSHA believes that the current standard, which has been in place with little change for 25 years, needs a complete revision to provide greater protection and eliminate ambiguity and confusion. OSHA believes that reorganizing the standard's requirements into a more logical sequence and providing more effective protection will help employers to understand better how to protect their employees from the hazards associated with steel erection and will thus reduce the incidence of injuries and fatalities in this workforce.

OSHA tracks fatalities through its Integrated Management Information System (IMIS), which captures a large percentage of the fatalities in the steel erection industry; however, detailed information on the conditions that give rise to steel erection accidents is less readily available. The best available data are derived from NIOSH and industry studies and from the Bureau of Labor Statistics (BLS) (Ex. 9–39). During SENRAC negotiations, OSHA staff and a Committee statistical workgroup analyzed accident information derived from OSHA's IMIS system (Exs. 9–14A and 9–42). Of the data reviewed, the IMIS fatality/catastrophe reports provided the richest source of accident descriptions. However, it was frequently difficult for OSHA and the Committee to determine several critical elements, such as the precise activity being undertaken at the time of the accident, whether the victim was a trained ironworker, or the type of structure under construction or repair.

Nevertheless, OSHA believes that the IMIS reports, combined with the collective experience of the members of the SENRAC workgroup, provide a solid basis for identifying the types of hazards that result in accidents during steel

erection. An analysis of OSHA fatality/catastrophe data was performed by the SENRAC Statistical Workgroup which analyzed an eleven-year period (January 1984 through November 1994) and determined that 323 fatal accidents involved factors that are addressed both by OSHA's current and proposed steel erection standards [Ex. 9–42, Attachment C]. After categorizing the accidents according to primary contributing factors, the SENRAC workgroup concluded that the leading initial cause of accidents was slips (23.8 percent). The next highest categories were unknown (17.3 percent) and collapse (15.8 percent). Categorizing the accidents in the IMIS database by the immediate (final) cause of death, the SENRAC analysis reveals that 284 of the 323 fatalities (87.9 percent) involved falls from various heights where fall protection was either not provided or not used. Categorized by activity, decking was associated with the most fatalities (22.9 percent), followed by connecting (17.0 percent) and bolting (11.5 percent). An OSHA staff evaluation of these reports for an eight year period (January 1984 through December 1990) revealed that fatalities associated with various types of accidents were caused by the following factors:

- *Collapses while landing or placing a load*—most were the result of placing loads on unsecured or unbridged joists.
- *Collapses while connecting joists or trusses*—most were the result of prematurely disconnecting the crane before the piece was secure.
- *Workers struck by objects during miscellaneous activities*—most were the result of walking or working under a load.
- *Workers struck by objects and then falling*—most were the result of being struck while landing a load or making a connection, by a tool slipping, or by a piece of decking being blown off a pile when fall protection was not provided or used.
- *Improper use or failure of fall protection*—most were the result of employee failure to use available fall protection systems even though the worker was wearing a belt (and in some cases lifelines were rigged).
- *Unsecured or unstable decking*—most were the result of stepping onto or working on unsecured decking that slipped out of place when fall protection was not provided or used.
- *Other falls during decking activities*—most were the result of stepping off the metal decking onto insulation (and then falling to the ground) during roofing operations where fall protection was not provided or used.
- *Plumbing, bolting, welding and cutting*—most were the result of the worker not being tied off while at the work station (whether or not fall protection was provided).
- *Walking/standing on the beam/joist (i.e., moving point-to-point)*—most were slips or falls where fall protection was not provided or used.

Based upon these analyses, OSHA has preliminarily determined that the SENRAC recommendations would, taken together, generally address those situations that have caused a significant number of ironworker catastrophes and fatalities in the past.

For the time period examined, the fatality/catastrophe reports described accidents that involved at least one fatality or 5 hospitalizations. (In April, 1994, the reporting criterion was changed to 1 fatality or 3 hospitalizations (59 FR 15594).) These reports do not cover the entire universe of steel erection accidents; for example, an individual accident that did not result in a fatality would not be reported in the IMIS reports. Nonetheless, the IMIS data enabled OSHA to broadly characterize the fatality data in a way that permitted the estimation of baseline risk for specific types of steel erection hazards.

For its assessment of baseline risk in steel erection, OSHA used fatality data from the Bureau of Labor Statistics' (BLS) Census of Fatal Occupational Injuries and distributed the data according to the committee's categorization of the OSHA IMIS accident data. BLS reports that over the period 1982–1993, structural metal workers experienced an average of 40 fatalities per year. OSHA determined that, of these fatalities, approximately 28 deaths per year were caused by factors that are addressed by the proposed standard (see the preliminary economic analysis, Chapter III, summarized below in Section VII). Furthermore, results from the 1992 BLS injury survey identify 1,836 lost-workday injuries (1,164 ''struck-by'' injuries and 672 ''falls to lower levels'') whose circumstances would be addressed by provisions in the proposed standard. With an estimated workforce of 38,980 iron workers in construction ([BLS, Occupational Employment Statistics Survey, 1993]; see the preliminary economic analysis), OSHA concludes that these baseline fatality and injury levels are high and clearly pose a significant risk to these workers that justifies Agency action. Therefore, OSHA has undertaken this negotiated rulemaking to reduce these significant risk levels. OSHA preliminarily concludes that the proposed standard will substantially reduce this significant risk.

Even though detailed data targeted exclusively at steel erection accidents are not available, steel erection is known to have a high rate of serious accidents. Available sources of information on steel erection injuries and fatalities include a draft report on fatal work-related falls in structural steel erection (Ex. 9–13E); a draft National Institute for Occupational Safety and Health (NIOSH) document entitled ''Structural Steel Erection: Falls'' (Ex. 9–15); the report of the SENRAC Statistical Workgroup (Exs. 9–42 and 9–49); a comparison of non-union and union contractor construction fatalities (Ex. 9–85); and a report on fatalities in the construction industry in the United States, 1992 and 1993, by the Center to Protect Workers' Rights (Ex. 9–119). The Committee urged OSHA to use improved technology to collect more detailed steel erection fatality inspection data. OSHA agrees with SENRAC on this issue, because an improved fatality data base will permit a more in-depth analysis of construction fatalities and provide information not available at the time of the negotiations on the most hazardous types of construction and construction activities by occupation. In response, OSHA has developed and implemented an enhanced coding system which must be used by OSHA compliance officers when recording construction fatality investigations for entry into the Agency's IMIS. This system was implemented nationally on January 1, 1997. The data OSHA is now recording when making fatality investigations will provide a rich source of detailed information indicating how and where construction fatalities occur.

Three years after the rule becomes final, OSHA will use the improved fatality data to evaluate the rule's effectiveness. Based upon this evaluation, a determination will be made as to whether modifications to the standard are necessary (see Ex. 9–130).

The following examples from OSHA's IMIS reports of accident investigations illustrate the types of accidents that occur in steel erection (Ex. 9–157):

1. April 25, 1990: 1 Fatality and 3 injuries. Four employees were sitting on steel roof beams. Two employees were bolting beams to columns and the other two employees were sitting on the beams connecting roof purlins. A gust of wind caused the columns to topple in a domino fashion. One of the employees connecting roof purlins fell 25 feet to his death and the other three employees

fell and were hospitalized. OSHA believes that compliance with the anchor bolt requirements of proposed § 1926.755(a) could have prevented this accident by requiring that all columns be anchored by a minimum of four anchor bolts and that unstable columns be guyed or braced where deemed necessary by a competent person.

2. July 23, 1984: Fatality. An employee was welding roof decking adjacent to an unguarded staircase opening. The employee fell through the opening 57 feet to the sub-level and died of multiple injuries. OSHA believes that compliance with proposed § 1926.754(e)(2) could have prevented this accident by requiring proper procedures for cutting and covering floor and roof openings.

3. October 5, 1988: Fatality. While walking atop structural steel checking joints and bolts, an employee slipped or misjudged his footing and fell approximately 20 feet to the concrete floor below, resulting in his death. OSHA believes that compliance with the fall protection requirements of proposed § 1926.760(a)(1) could have prevented the accident by ensuring that the employee was properly protected from fall hazards.

4. July 24, 1987: Fatality. While bolting-up, an employee's foot slipped, causing him to fall nearly 24 feet head first to the concrete below. OSHA believes that compliance with the fall protection requirements of proposed § 1926.760(a)(1) could have prevented the accident by ensuring that the employee was properly protected from fall hazards.

OSHA believes that in this case and the case before, compliance with the proposed fall protection requirements in § 1926.760(a)(1) could have prevented these fatalities by requiring that employees on a walking/working surface with an unprotected side or edge more than 15 feet above a lower level be protected from fall hazards.

5. November 12, 1987: Fatality. An employee was connecting X-bracing at the end of a bar joist. The joist was 40 feet long and welded at one end. The employee was sitting on the joist connecting the X-bracing when the joist slipped. The employee rode the joist down 25 feet and died of massive head injuries. OSHA believes that compliance with existing § 1926.751(c)(3) or the clarified and more comprehensive provisions of proposed § 1926.757, the open web steel joist section, and more specifically with paragraph (d)(1), could have prevented the accident by ensuring that specific erection bridging requirements were met before the hoisting cable was released from a joist.

6. April 2, 1987: 1 Fatality, 1 hospitalized injury. Two employees had unloaded 2 bundles of metal decking, 2 bundles of bridging and 2 bundles of roof frames onto 6 open web steel joists 25 feet above ground level. The joists were at 5½ foot centers and welded on the end to the ''I'' beam. The employees had just unhooked the second bundle of frames when the joist rolled, causing the employees to fall. All six joists broke from the welds and collapsed, landing on the employee. OSHA believes that this accident also could have been prevented by compliance with the proposed open web steel joist section of the proposed standard. Specifically, the proposed provisions of § 1926.757(e) provide criteria to be met before landing loads on joists. The requirements of current subpart R are not as complete or comprehensive in this regard.

OSHA believes that the proposed provisions will enhance employee protections by adding new requirements to close gaps in current coverage, strengthening many of the existing requirements, and promoting compliance by clarifying and consolidating current requirements. For further discussion of accident rates and significant risk, see Section VII, *Preliminary Economic Analysis.*

Based on the available information referenced in OSHA's preliminary economic analysis and other record evidence, OSHA finds that structural metal workers are faced with a significant risk of serious injury or death that can be reduced substantially by the revisions contained in this proposal. The Agency has estimated that, each year, approximately 38,980 workers in the United States suffer 1,836 serious (*i.e.,* lost-workday) steel erection injuries. In addition, an estimated 28 steel erection workers die every year because of preventable hazardous workplace conditions. OSHA's analysis has estimated that, of the 28 annual steel erection fatalities, 26 (93 percent) will be averted by compliance with the proposed standard. Additionally, of the 1,836 lost-workday steel erection injuries occurring annually, OSHA's analysis estimates that 1,151 (63 percent) will be averted by compliance with the proposed standard. Therefore, OSHA preliminarily finds it both necessary and appropriate to proceed with rulemaking for steel erection activities.

V. Summary and Explanation of the Proposed Standard

The following discussion summarizes and explains each provision in the proposal and the substantive changes proposed to be made to the provisions of OSHA's existing steel erection standard.

Section 1926.750 Scope and application

The existing standard does not contain a scope and application section. OSHA is proposing to add this new section to clarify that the standard would apply to employers engaged in the erection, alteration and/or repair of steel in single and multi-story buildings, bridges and other structures where steel erection occurs as well as to identify some of the specific activities that may be included in steel erection.

Paragraph (a) Scope. This proposed paragraph states the purpose of the subpart, which is to protect employees from the hazards associated with steel erection in the construction, alteration and/or repair of single and multi-story buildings, bridges, and other structures where steel erection occurs. The fact that the existing standard does not clearly address scope has caused much debate in the past over what structures are covered by subpart R. This paragraph would also clarify that subpart R does not apply to electrical transmission towers, communication and broadcast towers, or tanks. These structures are covered by provisions in other subparts of Part 1926.

Paragraph (b) Application. In this paragraph, OSHA lists the steel erection activities that may be covered by subpart R.

When SENRAC began negotiations on subpart R, the scope and application of subpart R was anticipated to be a major issue for deliberation. At the first meeting, the Committee formed a workgroup to determine what the proposed scope of subpart R should be. The Committee wanted to state clearly that this proposed steel erection standard would apply to more than multi-story buildings. The workgroup recommended, and the Committee agreed, that steel erection activities should include hoisting, connecting, welding, bolting, and rigging structural steel, steel joists and metal buildings. The Committee also decided that steel erection activities should include the installation of metal deck, siding systems, miscellaneous metals, ornamental iron and similar materials as well as moving point-to-point while performing these activities. OSHA is proposing to include these activities among those considered to be steel erection activities, as recommended by the Committee.

In an attempt to clarify what structures and activities could be considered steel erection, the scope and application paragraph includes an

extensive list of structures and activities as developed by SENRAC (see notes to paragraphs (a) and (b) of proposed § 1926.750). The notes are an attempt to ensure that employers performing the listed activities will be aware that they could potentially be covered by the proposed steel erection standard.

SENRAC intended the notes to enhance compliance by listing structures where steel erection *could* occur since many of the structures listed do not always involve steel erection. Likewise, the steel erection activities listed include examples of construction activities that are sometimes involved in steel erection but may not always be conducted by the steel erector. Simply because an employee is working on a listed structure or is performing a listed activity does not necessarily mean that the employee is engaged in steel erection. Thus, there is no presumption that every listed item constitutes a steel erection activity or operation. To determine whether a given activity on a particular structure does indeed constitute steel erection, the employer first must determine that steel erection is actually being performed and that the activities being performed are covered by this subpart. This determination would be based on the following criteria: (1) Whether the work falls within the definition of steel erection found in proposed § 1926.751; and (2) Whether the structure being erected and the activities being performed fall within the scope and application paragraphs found in proposed § 1926.750. In other words, in order to be covered by subpart R, as proposed, work would have to fit within the definition of steel erection, the scope of the proposed standard, and the application of the proposed standard.

The Committee discussed at length the differences between construction and maintenance because the construction industry performs millions of manhours per year of ''industrial maintenance'' work. The definition of construction contained in the Davis-Bacon Act is:

> Construction work means work for construction, alteration, and/or repair, including painting and decorating.

OSHA has interpreted this definition to include alteration, repair, renovation, rehabilitation and remodeling of existing facilities or structure.

After clarifying that work is defined based on the nature of the work being performed rather than on the job title of the worker performing it, SENRAC agreed that the scope of proposed subpart R should be governed by the definition of construction work contained in § 1910.12(b), § 1926.13 and § 1926.32(g).

SENRAC debated extensively the detailed lists of structures and activities. The Committee decided that these lists should be placed in the standard itself in paragraphs (a) and (b), respectively, because they stated the broad range of structures and activities that might be covered by subpart R. The lists are intended to enhance compliance by listing structures where steel erection could occur. OSHA is proposing these lists for comment from interested parties. Specifically, are these lists necessary? Do they clarify the extent of steel erection activities? Will they introduce confusion by suggesting that all steel erection activities and structures are included in these lists or, alternatively, that any listed activity performed on a listed structure necessarily constitutes steel erection? Because of their size, would they be more effective as an appendix to the rule or in compliance materials?

OSHA is proposing that the scope of subpart R exclude electrical transmission towers, communication and broadcast towers, and tanks from coverage. The Committee concluded that tower erection is a specialized form of steel erection and that electrical transmission towers are regulated under subpart V of 29 CFR Part 1926. In discussing potential exclusions from the scope of the proposed standard, the Committee as a whole expressed uncertainty about the extent to which these towers were currently covered by OSHA standards. OSHA provided a memo to the Committee (Ex. 9–53) describing the current coverage of towers in OSHA standards. Based on that information and the tower erection industry's reasons for exclusion from coverage by subpart R (Ex. 9–127), the Committee agreed that it would be appropriate to exclude electrical transmission, communication, and broadcast towers from the proposed scope. The Committee also believes that tanks should not be included in the scope of subpart R since tank construction is also, based on its use of cylindrical construction techniques, a specialized industry. In addition, the tank industry has clearly stated its reasons for not being covered by subpart R (Ex. 9–32F). Since tanks have never been covered by subpart R, OSHA is proposing to exclude them from the scope of revised subpart R, as well, and the Committee is in agreement with this approach. In the case of water towers, OSHA intends subpart R to cover the steel structure upon which the water tank is supported but not the water tank itself, as recommended by the Committee. OSHA specifically solicits comments on the appropriateness of these exclusions from the scope of the proposed standard.

Section 1926.751 Definitions

The current standard does not contain a definitions section. Since the proposal is more comprehensive than the existing standard and refers to many technical concepts, terms and materials, a definition section is being proposed. The proposed definition section lists and defines all major terms used in the proposed standard to assist employers in understanding the proposed provisions and thus facilitate compliance.

Anchored bridging. This term would be defined by OSHA to mean that the steel joist bridging is connected to a bridging terminus point. This definition was recommended by the Steel Joist Institute (SJI), accepted by the Committee and is being proposed by OSHA.

Bolted diagonal bridging. OSHA is proposing to define this term to mean diagonal bridging which is bolted to a steel joist or joists. This definition was developed by a SENRAC workgroup, was accepted by the Committee, and is being proposed by OSHA.

Bridging clip. OSHA is proposing that this term be defined as a device that is attached to the steel joist to allow the bolting of the bridging to the steel joist. This definition was recommended by SJI and accepted by the Committee.

Bridging terminus point. This term would be defined to mean a wall, beam, tandem joists (with all bridging installed and a horizontal truss in the plane of the top chord) or other element at an end or intermediate point(s) of a line of bridging that provides an anchor point for the steel joist bridging. This definition was recommended by SJI, accepted by the Committee, and is being proposed by OSHA.

Choker. OSHA would define this term to mean a wire rope or synthetic fiber rigging assembly that is used to attach a load to a hoisting device. This definition was developed by a SENRAC workgroup and accepted by the Committee.

Clipped connection. This term would be defined by OSHA to mean the connection material on the end of a structural member intended for use in a double connection which has a notch at the bottom and/or top to allow the bolt(s) of the first member placed on the opposite side of the central member to remain in place. The notch(es) fits around the nut or bolt head of the opposing member to allow the second member to be bolted up without

removing the bolt(s) holding the first member. This definition was developed by a workgroup of the Committee and accepted by SENRAC.

Cold formed joist. OSHA defines this term as an open web joist fabricated with cold formed steel components. This definition was recommended by SJI, was accepted by the Committee, and is being proposed by OSHA.

Cold forming. This term would be defined by OSHA to mean the process of using press brakes, rolls, or other methods to shape steel into desired cross sections at room temperature. This definition was recommended by the Steel Deck Institute, was accepted by the Committee, and is being proposed by the Agency.

Competent person. This term is defined in § 1926.32(f) as one who is capable of identifying existing and predictable hazards in the surroundings or working conditions which are unsanitary, hazardous, or dangerous to employees, and who has authorization to take prompt corrective measures to eliminate them. Because of the frequent use of the term in this proposal, the Committee urged OSHA to repeat this definition in subpart R even though the definition appears in § 1926.32 and applies to all of the standards contained in 29 CFR Part 1926, and OSHA agrees with the Committee's recommendation. The Committee reasoned that an employer performing steel erection should be able to locate the competent person definition in subpart R instead of having to search for it elsewhere in Part 1926.

Composite joists. OSHA defines this term to mean steel joists designed to act in composite action with concrete floor and (or) concrete roof slabs. Typically, a portion of the top chord of the joist (or a lug or similar device attached to the top chord of the joist) is embedded in the concrete slab. This definition was developed by a SENRAC workgroup and accepted by the Committee.

Connector. OSHA would define this term to mean an employee who, working with hoisting equipment, is placing and connecting structural members and/or components. After lengthy discussion on how to define what a connector is and what tasks a connector performs, the Committee decided to define as narrowly as possible the activities that a connector performs in light of the connector-specific proposed fall protection provisions in § 1926.760, which will be discussed later in the preamble. OSHA requests comment on this definition.

Construction load for joist erection. This term would be defined to mean any load other than the weight of the employee(s), the joists and the bridging bundle. This definition was recommended by SJI, accepted by the Committee, and is being proposed by OSHA.

Controlled Decking Zone (CDZ). This term would be defined by OSHA to mean an area in which certain work (*e.g.*, initial installation and placement of metal deck) may take place without the use of guardrail systems, personal fall arrest systems or safety net systems provided that alternative procedures (*e.g.*, controlled access, worker training, use of control lines or equivalent) are implemented. Controlled decking zones are discussed in proposed § 1926.760(c). OSHA requests comment on the necessity of defining a CDZ since all of the requirements for a CDZ are in proposed § 1926.760(c). If it is necessary to define a CDZ, is this an appropriate definition?

Controlled load lowering. OSHA would define this term to mean lowering a load by means of a mechanical hoist drum device that allows a hoisted load to be lowered with maximum control using the gear train or hydraulic components of the hoist mechanism. Controlled load lowering requires the use of the hoist drive motor to lower the load. This definition was developed by a SENRAC workgroup and accepted by the Committee. Controlled load lowering is an essential component of the multiple lift rigging procedure and the hoisting of personnel platforms addressed in proposed § 1926.753.

Controlling contractor. OSHA would define this term to mean a prime contractor, general contractor, construction manager or any other legal entity at the site who has, by contract with other parties, the overall responsibility for the project, its planning, quality and completion and is intended to describe an entity in addition to the steel erector who is responsible for hazards that result from poor performance, pre-planning, or communication. Based on its analysis of actual steel erection fatalities, catastrophes and collapses, the Committee agreed that many hazardous situations could have been avoided if, for example, concrete foundations had been properly cured, anchor bolts that were replaced had been properly repaired, or cranes had been appropriately placed to avoid overhead exposure. All of these primarily fall within the responsibility of the controlling contractor. In several of the proposed revisions, therefore, OSHA is proposing, based on the Committee's recommendation, that the controlling contractor be held responsible for communicating with the steel erector to prevent accidents from happening during certain activities; see, for example, § 1926.752(a), (b) and (c) (Approval to begin steel erection, site layout and overhead protection, respectively); § 1926.755(b)(3) (Repair, replacement or field modification of anchor bolts); § 1926.759(b) (Falling object protection); and § 1926.760(e) (Fall protection). OSHA solicits comments from interested parties on the appropriateness of this approach to ensuring accountability for adequate planning and coordination.

Critical lift. OSHA proposes to define this term to mean a lift that (1) exceeds 75% of the rated capacity of the crane or derrick, or (2) requires the use of more than one crane or derrick. This definition was developed by a SENRAC workgroup and accepted by the Committee.

Decking hole. OSHA would define this term to mean a gap or void more than 2 inches (5.1 cm) in its least dimension and less than 12 inches (30.5 cm) in its greatest dimension in a floor, roof or other walking/working surface. Pre-engineered holes in cellular decking are not included in this definition. This definition was developed by a SENRAC workgroup to be industry specific and was accepted by the Committee. The workgroup borrowed part of this definition from the subpart M definition of ''hole.'' The subpart M definition was modified, however, to limit the size of a hole to more than 2 inches in its least dimension and less than 12 inches in its greatest dimension to be compatible with the definition of an opening (defined later). The proposed definition of decking hole and the proposed definition of opening differ from the subpart M definitions in that subpart M uses the term ''hole'' to describe all holes and openings in floors, roofs and other walking/working surfaces and uses the term ''opening'' to apply only to holes and openings in walls. By custom and practice, the common usage of these same terms in steel erection refers to different situations and hazards. In steel erection, a hole is a commonly used term that means a small gap or void that presents a tripping hazard or a falling object hazard and an opening is a larger gap or void in a walking/working surface that presents a fall hazard to the employee. Therefore, to be more industry specific, OSHA is proposing to define ''decking hole'' and ''opening'' based on the size of the gap or void in a floor, roof or other walking/working surface only. This proposal contains requirements that treat ''decking holes'' and ''openings'' differently, which necessitates having

two separate definitions based on the size of the gap or void.

Derrick floor. This term, which was developed by a SENRAC workgroup and accepted by the Committee, would be defined by OSHA to mean that elevated floor of a building or structure that has been designated to receive hoisted pieces of steel prior to their final placement.

Double connection. OSHA proposes to define this term to mean an attachment method where the connection point is intended for two pieces of steel which share common bolts on either side of a central piece. This definition was developed by the Committee to address the serious collapse hazard involved in making this complex connection. Double connections are discussed in proposed § 1926.756(c).

Erection bridging. OSHA would define this term to mean the bolted diagonal bridging that must be installed prior to releasing the hoisting cables from the steel joists. This definition was recommended by SJI and accepted by the Committee and the term is found in proposed § 1926.757, Open Web Steel Joists.

Fall restraint (Positioning device) system. This term would be defined by OSHA to mean a body belt or body harness used to prevent an employee from free falling more than 24 inches (61 cm) and where self rescue can be assured. Such a system consists of an anchorage, connectors, a body belt or harness and may include a lanyard, deceleration device, lifeline, or suitable combination of these. This definition was developed by the Committee, and the term is used in proposed § 1926.760, Fall Protection. The criteria for ''positioning device systems'' found in § 1926.502(e) would apply to these types of fall restraint systems used in steel erection.

Girt (in pre-engineered metal buildings). This term would be defined by OSHA to mean a ''Z'' or ''C'' shaped member formed from sheet steel spanning between primary framing and supporting wall material. This definition was developed by a SENRAC workgroup, accepted by the Committee, and the term is used in proposed § 1926.758, Pre-engineered Metal Buildings.

Headache ball. OSHA proposes to define this term to mean a weighted hook that is used to attach loads to the hoist load line of the crane. This definition was developed by a SENRAC workgroup, accepted by the Committee, and is used in proposed § 1926.753, Hoisting and Rigging.

Hoisting equipment. This term would be defined to mean commercially manufactured lifting equipment designed to lift and position a load of known weight to an erection location at some known elevation and horizontal distance from the equipment's center of rotation. ''Hoisting equipment'' includes but is not limited to cranes, derricks, tower cranes, barge-mounted derricks or cranes, gin poles and gantry hoist systems. The Committee developed a definition for hoisting equipment that would include all equipment that is used in steel erection to lift loads to a specified location. The intent was to ensure that this equipment is not strictly limited to cranes. The definition was also crafted to avoid a situation where a steel erector might elect to characterize employees who are not true connectors, *e.g.*, detailers, as connectors by providing them with a ''come-a-long'' to meet the definition of connector. Thus, a ''come-a-long'' would not be included in the definition of hoisting equipment because a ''come-a-long'' is a mechanical device, usually consisting of a chain or cable attached at each end, that is used to facilitate movement of materials through leverage rather than true hoisting equipment.

Leading edge. OSHA proposes to define this term to mean the unprotected side and edge of a floor, roof, or formwork for a floor or other walking/working surface (such as deck) which changes location as additional floor, roof, decking or formwork sections are placed, formed or constructed. This definition is based on the subpart M definition of ''leading edge'' but was enhanced by the Committee which added ''unprotected side and'' before *''edge''* to clarify that all unprotected sides and edges would be defined in subpart R as leading edges.

Metal deck. This term would be defined by OSHA to mean a commercially manufactured, structural grade, cold rolled metal panel formed into a series of parallel ribs; for this subpart, this would include metal floor and roof decks, standing seam metal roofs, other metal roof systems and other products such as bar gratings, checker plate, expanded metal panels, and similar products. After installation and proper fastening, these decking materials serve a combination of functions including, but not limited to: a structural element designed in combination with the structure to resist, distribute and transfer loads, stiffen the structure and provide a diaphragm action; a walking/working surface; a form for concrete slabs; a support for roofing systems; and a finished floor or roof. This definition was developed by a SENRAC workgroup and accepted by the Committee. This workgroup believes that, for the purposes of steel erection, rather than referring to several similar building materials associated with a particular hazard, a generic term should be defined and then be used consistently in the standard. Since the materials listed in this definition are all similarly installed and eventually become walking/working surfaces, the workgroup believes that a single term would provide both greater clarity and facilitate compliance. In developing this definition, the workgroup relied on the Steel Deck Institute (SDI) ''Manual of Construction with Steel Deck,'' in addition to its own collective expertise.

Multiple lift rigging. OSHA would define this term to mean a rigging assembly manufactured by wire rope rigging suppliers that facilitates the attachment of up to five independent loads to the hoist rigging of a crane. This definition was developed by a SENRAC workgroup and accepted by the Committee.

Opening. OSHA would define this term to mean a gap or void 12 inches (30.5 cm) or more in its least dimension in a floor, roof or other walking/working surface. For the purposes of this subpart, skylights and smoke domes that do not meet the strength requirements for covered openings in § 1926.760(d)(1) would be regarded as openings. This definition was developed by a SENRAC workgroup to prevent workers from sitting or walking on covers that are insufficient to support their weight. The last sentence of the definition was added to ensure that skylights and smoke domes would not be considered covered if they do not meet the strength requirements for covered openings in § 1926.760(d)(1) and therefore must be protected by other means. This definition differs from the definition in subpart M of this part as discussed earlier in the definition of ''decking hole.''

Permanent floor. This term would be defined by OSHA to mean a structurally completed floor at any level or elevation (including slab on grade). A floor would be considered a permanent floor when all the work contained on the structural contract documents has been completed for that floor. Concrete poured on metal deck and grating or floor plate applied to structural members would be considered permanent floors. This definition was developed by the Committee to promote clarity.

Personal fall arrest system. OSHA would define this term to mean a system used to arrest an employee in a fall from a working level; a personal fall arrest system consists of an anchorage, connectors, and a body harness and may

include a lanyard, deceleration device, lifeline, or suitable combination of these. The Committee recommended that this definition be identical to the definition used in subpart M of this part.

Pre-engineered metal building. This term would be defined by OSHA to mean a field-assembled building system consisting of framing, roof and wall coverings, and generally made of steel. Typically, in a pre-engineered metal building, many of these components are cold-formed shapes. These individual parts are fabricated in one or more manufacturing facilities and shipped to the job site for assembly into the final structure. Engineering design of the system is normally the responsibility of the pre-engineered metal building manufacturer. This definition was developed by a SENRAC workgroup and accepted by the Committee.

Project structural engineer of record. This term, which was developed by the Committee and is used throughout the proposed standard, would be defined by OSHA to mean the registered, licensed professional responsible for the design of structural steel framing and whose seal appears on the structural contract documents.

Purlin (in pre-engineered metal buildings). OSHA proposes to define this term to mean a ''Z'' or ''C'' shaped member formed from sheet steel spanning between primary framing and supporting roof material. This definition was developed by a SENRAC workgroup and accepted by the Committee.

Qualified person. This term, which is also defined in § 1926.32(m), would be defined in the proposed standard to mean one who, by possession of a recognized degree, certificate, or professional standing, or who by extensive knowledge, training, and experience, has successfully demonstrated the ability to solve or resolve problems relating to the subject matter, the work, or the project. As with the definition of competent person, because of the frequent use of the term in this proposal, the Committee urged OSHA to repeat this definition in subpart R even though the definition already exists in § 1926.32 and applies to all of the standards contained in 29 CFR Part 1926 because repeating it would enable an employer performing steel erection to locate the qualified person definition in subpart R instead of having to search for it somewhere else in Part 1926.

Safety deck attachment. OSHA is proposing to define this term to mean an initial attachment that is used to secure an initially placed sheet of decking to keep proper alignment and bearing with structural support members. The term originally used in the controlled decking zone (CDZ) working draft was ''safety deck welding'' and ''tack welds.'' Committee members pointed out that there were ways to attach the decking other than welding, *e.g.*, mechanical fastening. Since the intent is to safely ''attach'' the newly placed decking panels, the proposed rule uses the broader language recommended by the Committee.

Seat. This term would be defined by OSHA to mean a structural attachment mounted to a structural member beneath a connection point, designed to support an incoming member that is to be connected to the first member. This term, which was developed by a SENRAC workgroup and accepted by the Committee, is used in the double connection section, § 1926.756(c).

Shear connector. OSHA is proposing to define this term to include headed steel studs, steel bars, steel lugs, and similar devices which are attached to a structural member for the purpose of achieving composite action with concrete, *i.e.*, strengthening the top flange of the beam by interacting with the concrete to achieve a higher strength. This definition was developed by the Committee.

Steel erection. This term would be defined by OSHA to mean the erection of steel buildings, bridges and other structures, including the installation of steel flooring and roofing members and all planking and decking used during the process of erection. This definition was developed by the Committee, and OSHA requests comments on the appropriateness of this definition.

Steel joist. OSHA proposes to define this term to mean an open web, secondary load-carrying member of 144 feet (43.9 m) or less suitable for the support of floors and roofs. This term does not include structural steel trusses or cold-formed joists. This definition was recommended by SJI and accepted by the Committee.

Steel joist girder. OSHA would define this term to mean an open web, primary load-carrying member, designed by the manufacturer, suitable for the support of floors and roofs. This does not include structural steel trusses. This definition was recommended by SJI and accepted by the Committee.

Steel truss. This term would be defined by OSHA to mean an open web member designed of structural steel components by the project structural engineer of record. For the purposes of this subpart, a steel truss would be considered equivalent to a solid web structural member. This definition was recommended by SJI and accepted by the Committee.

Unprotected sides and edges. OSHA proposes to define this term to mean any side or edge (except at entrances to points of access) of a walking/working surface, *e.g.*, floor, roof, ramp or runway, where there is no wall or guardrail system at least 39 inches (1.0 m) high. This definition is identical to the corresponding definition in subpart M of this part.

Section 1926.752 Site Layout, Site-specific Erection Plan and Construction Sequence

After a review of accident reports involving collapses, the Committee reached the conclusion that many of these accidents could have been averted had adequate pre-erection communication and planning occurred. This section of the proposed rule sets forth OSHA's requirements for proper communication between the controlling contractor and the steel erector prior to the beginning of the steel erection operation and proper pre-planning by the steel erector to minimize overhead exposure during hoisting operations; Appendix A, which is referred to in this section, would also provide guidelines for employers who elect to develop a site-specific erection plan. OSHA's current standard does not contain provisions similar to those being proposed in this section.

Paragraph (a) Approval to begin steel erection.

The Committee recognized that under current practices in the industry, erection decisions are often made in the field when the steel arrives. The Committee believes that pre-planning and coordination are currently not occurring to the extent they should be.

OSHA agrees that lack of adequate planning and coordination contributes to accidents and is proposing, in paragraph (a)(1), that the controlling contractor ensure that the concrete in footings, piers, or walls, or the mortar in masonry piers and walls has achieved a minimum of 75% of its design compressive strength prior to the imposition of any structural steel load or has achieved a strength that is sufficient to support the loads imposed. This proposed requirement agrees with a recommendation by the American Institute of Steel Construction (AISC) and is similar to the OSHA requirement for concrete construction found in § 1926.703(e)(ii), which requires that formwork not be removed from cast-in-place concrete ''* * * until the concrete has been properly tested with an appropriate American Society for Testing and Materials (ASTM) standard

test method designed to indicate the concrete compressive strength, and the test results indicate that the concrete has gained sufficient strength to support its weight and superimposed loads.'' Since the footings, piers and walls intended to be covered by this proposed section will be supporting the steel structure being erected, OSHA, as well as the Committee, wishes to ensure that this information is provided to the steel erector before the steel is placed on the concrete.

Paragraph (a)(2) cross-references § 1926.755(b) and would require that any repairs, replacements, and field modifications be performed in accordance with the anchor bolt requirements contained in § 1926.755(b). As in the case of proposed paragraph (a)(1), OSHA, along with the Committee, wishes to ensure that the steel erector is informed of any repair, replacement, or modification to the anchor bolts prior to the placement of steel.

Paragraph (b) of this section sets out the site conditions that would have to be provided and maintained by the controlling contractor in order for the steel erector to move around the site and perform necessary operations in a safe manner.

Paragraph (b)(1) would require that the controlling contractor provide and maintain adequate access roads into and through the site for the safe delivery and movement of derricks, cranes, trucks, other necessary equipment, and the material to be erected as well as means and methods for pedestrian and vehicular control. Compliance with this provision could be achieved by developing access roads and clearly demonstrated pedestrian areas, and maintaining these throughout the life of the project.

Paragraph (b)(2) would require that the controlling contractor also provide and maintain a firm, properly graded, drained area, readily accessible to the work and with adequate space for the safe storage of materials and the safe operation of the erector's equipment. The provisions in paragraphs (b)(1) and (b)(2) are necessary to ensure that a site is prepared for the safe commencement of steel erection at a site. The Committee determined and OSHA agrees that the responsibility to provide and maintain site conditions lies primarily with the controlling contractor, who is responsible for the overall project and is the employer in the best position to minimize the hazards associated with improper site layout and conditions. The provisions in proposed paragraphs (b)(1) and (b)(2) were derived from the AISC code of standard practice for steel buildings and bridges (Ex. 9–36).

Proposed paragraph (c) addresses the hazards associated with overhead loads. Specifically, these hazards include failure of the lifting device, which would create a crushing hazard, and items falling from the load, which creates a struck by hazard. Given the nature of the loads used in steel erection, either of these events could result in serious injury or death.

Paragraph (c) would require that all hoisting operations in steel erection be pre-planned to ensure that no employee is required to be exposed to overhead hazards and that this pre-planning be done in accordance with § 1926.753(b), which contains criteria for working under loads, and § 1926.759, which contains requirements for falling object protection. (Although the specific requirements of proposed § 1926.753(b) and § 1926.759 are discussed later in the preamble, OSHA believes that including a cross-reference to these overhead protection requirements along with the other requirements that deal with site preparation and pre-planning would enhance safety and promote compliance.)

As a result of site-specific considerations, paragraph (d) would permit employers to elect, due to conditions specific to the site, to provide employee protection by means other than those specified in § 1926.753(a)(5), § 1926.757(a)(3), or § 1926.757(e)(4)(i), if they develop a site-specific erection plan that specifies alternative means and methods to be used. The site-specific erection plan would have to be developed by a qualified person, and the plan must be available to the employees at the site. During initial discussions, the Committee considered a requirement that would require every steel erection employer to develop a site-specific erection plan in writing for every project but decided that such a requirement would be unnecessarily paperwork-intensive, especially for small businesses. OSHA is providing, in Appendix A, a guideline for establishing the components of a site-specific erection plan, as recommended by the Committee. This appendix will assist employers in developing a site-specific erection plan. A site-specific erection plan will be easier to complete once the erector has developed a model plan. Some site-specific conditions that might lead an employer to rely on an alternative rather than the requirements specified in paragraphs § 1926.753(a)(5), § 1926.757(a)(3), and § 1926.757(e)(4)(i), and examples of possible alternative methods, are addressed in the discussion of these paragraphs later in this preamble.

Section 1926.753 Hoisting and Rigging

An essential element of steel erection is the rigging and hoisting of structural steel members and materials. Several hazards are associated with these operations. This section proposes requirements for hoisting and rigging operations during steel erection activities.

Paragraph (a) General.

Paragraph (a)(1) would require a pre-shift visual inspection of cranes to be used for steel erection. Paragraph (a)(1)(i) would require that, in addition to meeting the requirements of § 1926.550, cranes being used in steel erection activities be visually inspected prior to each shift by a competent person; this inspection must include observation of the equipment during operation to detect any deficiencies.

The current requirements of § 1926.550 require that all crawler, truck or locomotive cranes in use meet the applicable requirements for design, inspection, construction, testing, maintenance and operation prescribed in the American National Standards Institute (ANSI) standard B30.5–1968, Safety Code for Crawler, Locomotive and Truck Cranes (Ex. 9–114). In addition to the requirements of § 1926.550, OSHA has preliminarily concluded, and the Committee agrees, that a more frequent inspection is needed for cranes being used for steel erection. An inspection prior to each shift is necessary to provide an added measure of protection because the proposed rule would permit certain specialized and potentially hazardous types of hoisting operations. These hoisting operations include the use of cranes to hoist employees on a personnel platform (§ 1926.753(a)(4)); to perform multiple lifts (§ 1926.753(c)); and to suspend loads over employees (§ 1926.753(b)). Since these operations are inherently dangerous, it is particularly critical for the hoisting equipment to be in proper working condition, which means that a complete visual inspection must be performed before each shift by a competent person, *e.g.*, the operator or oiler of the hoisting equipment being used or, on a large project, the master mechanic who checks each crane. This pre-shift visual inspection is anticipated to take between 10 and 20 minutes. At a minimum, the inspection would include the items listed in paragraphs (a)(i)(A) through (L); namely, inspection of (A) all control mechanisms for maladjustment; (B) control and drive mechanisms for excessive wear of

components and contamination by lubricants, water or other foreign matter; (C) safety devices, including, but not limited to, boom angle indicators, boom stops, boom kick-out devices, anti-two block devices, and load moment indicators where required; (D) air, hydraulic, and other pressurized lines for deterioration or leakage, particularly those which flex in normal operation; (E) hooks and latches for deformation, chemical damage, cracks, or wear; (F) wire rope reeving for compliance with hoisting equipment manufacturer's specifications; (G) electrical apparatus for malfunctioning, signs of excessive deterioration, dirt, or moisture accumulation; (H) hydraulic system for proper fluid level; (I) tires for proper inflation and condition; (J) ground conditions around the hoisting equipment for proper support, including ground settling under and around outriggers, ground water accumulation or other similar conditions; (K) the hoisting equipment for level position; and (L) the hoisting equipment for level position after each move and setup.

These are the inspection criteria listed in the ANSI B30.5–1968 standard; this standard is referenced in the current OSHA crane requirements of § 1926.550. These criteria are also included in the updated ANSI B30.5–1994, Mobile and Locomotive Cranes standard (Ex. 9–113), as a guideline for items which should be included in a pre-shift visual inspection. Items (A) through (I) are essentially the same as the requirements contained in the ANSI B30.5–1994 standard. The Committee recommended using the B30.5–1994 standard as the basis of reference since it reflects the most up-to-date industry practices; OSHA agrees with this recommendation. In the B30.5–1994 standard, items (a)(1)(i)(A) through (I) must be inspected during frequent inspections which, according to that standard, are assumed to take place at daily to monthly intervals, although items (A) and (D) are specifically recommended for daily inspection by that standard. The Committee considered whether the items in (A) through (L) should be inspected daily rather than pre–shift. However, the Committee noted that if a crane or other piece of hoisting equipment is not used for several days, it is only necessary to inspect that equipment before the shift on which it is to be used. As recommended by the Committee, OSHA is proposing that equipment need not be inspected if it is not to be used that day. Items (J), (K) and (L) were added by the Committee to provide additional safety during the critical period when the hoisting equipment is being set up. Item (J) is important when hoisting equipment is set up to ensure that all ground conditions in the area of the hoisting equipment are adequate to provide proper support for the hoisting equipment. Item (K) would simply require that the operator check a site glass, carpenter's level or the leveling mechanism contained on the hoisting equipment. Item (L) would ensure that, if the hoisting equipment is moved during a shift, it would be checked for level after setup. OSHA requests comment on whether, since items (A) through (K) are pre-shift inspections and item (L) is actually an inspection that takes place during the shift, item (L) should be placed elsewhere in paragraph (a).

As indicated above, the Committee intended these pre-shift inspections to reflect the current safe practices of the industry while at the same time imposing as little additional burden on the employer as possible. OSHA agrees with SENRAC's determination that a visual inspection is sufficient to accomplish these intentions, together with such movement of the crane as may be necessary to conduct the visual inspection. For example, to visually inspect the boom angle indicators the crane must be moved to determine that the indicators are functioning properly. Also, the anti-two blocking device can be visually inspected only by raising the headache ball to the crown block to ensure that the device automatically cuts off the power to the hoisting equipment. The ANSI B30.5 language, ''[Inspect] tires for recommended inflation pressure,'' was interpreted by the Committee to mean that a tire pressure gauge should be used to determine inflation pressure. However, the SENRAC Committee believes that the tires need only to be visually inspected for proper inflation as well as for overall condition and that no tire pressure gauge is needed. The proposal, therefore, calls for a ''visual inspection of tires for proper inflation and condition.''

Paragraph (a)(1)(ii) would require that, after the pre-shift inspection has been completed and a deficiency has been identified, the competent person is to determine immediately whether the deficiency constitutes a hazard. This paragraph is essentially the same as the requirement in ANSI B30.5–1994. Paragraph (a)(1)(iii) proposes to require that, if the competent person determines that the deficiency constitutes a hazard, the hoisting equipment be removed from service until the deficiency has been corrected. The Committee felt and OSHA concurs that it is necessary not only to determine that there is a deficiency but to ensure that the hoisting equipment is taken out of service until corrective actions are taken.

Paragraph (a)(1)(iv) would require that the employer keep a record of the inspection, including the date of the inspection; the signature of the person who inspected the hoisting equipment; and a serial number or other identifier for the hoisting equipment inspected. This certification record can be a check sheet or log book in which the operator or other inspector places a check mark next to the appropriate item on the list after visually checking it and then signs and dates the sheet or book. A crane operator's log book would be sufficient (Ex. 9–112).

Paragraph (a)(1)(v) would require that equipment operators be responsible for those operations under their direct control. Whenever there is any doubt as to the safety of the hoisting operation, the operator would have the authority to stop and to refuse to continue until safety has been assured. Since the operator is normally the most knowledgeable person about the equipment being used, OSHA agrees that the operator should have control over shutting down the equipment if it is believed to pose a safety concern. This requirement is identical to the parallel requirement in the ANSI B30.5–1968 standard for operating practices and is currently required since § 1926.550(b)(2) incorporates the ANSI B30.5–1968 standard by reference. The Committee decided that the B30.5–1968 requirement assigning responsibility for the safe operation of the hoisting equipment to the operator provides a greater degree of safety than the ANSI B30.5–1994 requirement, which places authority with the supervisor. A letter from a professional engineering firm to the secretary of the ASME B30 committee (Exhibit 9–133) addresses this issue as follows:

> * * * Control of a heavy-lifting operation solely under the direction of a supervisor or any other person who may be less qualified than he, is not prudent. The crane operator has instrumentation in the crane to base his action upon, and should be the ultimate person to make decisions about the capacity and safety of both the machine and lifting operation * * *
>
> A qualified crane operator can make decisions about handling a crane load. A supervisor may or may not have qualifications in safe crane operation. Safe crane operation belongs in the domain of qualified operators, not managers.

Paragraph (a)(2) would require that, prior to each shift, a qualified rigger inspect the rigging in accordance with

§ 1926.251 of this part. OSHA accepts the Committee's conclusion that it is not necessary to define the term ''qualified rigger.'' A qualified rigger is thus simply a ''qualified person'' who is performing the inspection of the rigging equipment. Rigging would be inspected according to the requirements in § 1926.251 of this part, Rigging Equipment for Material Handling. To promote ease of compliance, the proposal provides a cross reference to that section.

Paragraphs (a)(3) and (a)(4) address the issue of transporting employees using hoisting equipment. Paragraph (a)(3) would prohibit the direct use of the headache ball, hook or load to transport personnel except as provided in paragraph (a)(1)(v)(4) of this section. These practices are widely recognized to be unsafe since they expose the employee to hazards of falling off the load or, in a case where the load falls, falling with the load.

Paragraph (a)(4) of the proposal would allow the use of cranes and derricks to hoist employees on a personnel platform (*e.g.*, man basket) when work under this subpart is being conducted, even though the requirements of § 1926.550(g)(2), Crane or Derrick Suspended Personnel Platforms, prohibit the use of a crane or derrick to hoist employees on a personnel platform unless structural design or worksite conditions make conventional means more hazardous or infeasible. In steel erection, however, the work station moves progressively as pieces of structural steel are connected to each other. This means that elevators cannot be installed until much of the structure has been completed. Transporting ironworkers to a workstation elevated hundreds of feet in the air by hoisting a personnel platform with a crane eliminates the hazards associated with worker fatigue that can occur from climbing or walking up. The Committee also believes that many steel erection activities (particularly repetitive activities performed at different locations, such as bolting-up, that require a great deal of climbing up and down) can be performed much more safely and efficiently, and with greatly reduced exposure to hazards, when done from a personnel platform than from scaffolding. The time to perform the activity is only a fraction of the time to erect and dismantle the scaffolding that would be required to do the job safely. Exposures to fall hazards and other hazards associated with erection and dismantling of scaffolds for short term, repetitive activities are eliminated by the use of a personnel platform. The Committee further noted that, when cranes or lifts are used to hoist a personnel platform, employees engaged in steel erection are still protected by the other requirements of § 1926.550(g). These include hoisting work practices, such as performing the lift in a slow, cautious and controlled manner; holding pre-lift meetings; conducting trial lifts; requiring a safety factor of ten; and the use of engineering controls, such as anti-two blocking protection and controlled lowering capability. OSHA agrees that these measures increase the safety of employees being hoisted on a personnel platform; OSHA seeks comment from interested parties on the issue of hoisting employees as a regular practice in steel erection.

Paragraph (a)(5) would prohibit safety latches on hooks from being deactivated or made inoperable except: when a qualified rigger has determined that the hoisting and placing of purlins and single joists can be performed more safely by doing so; or when equivalent protection is provided in a site-specific erection plan. Some activities in steel erection create a situation where it is actually safer to hoist members by deactivating the safety latch, *e.g.*, when it eliminates the need for workers to climb up or onto unstable structural members, such as single columns or single bar joists, to unhook the member. The proposal would allow the employer to defeat or tie-back the safety latch in two situations: first, if a qualified rigger (during hoisting and placing of purlins and single joists) determines that deactivating the safety latch presents a lesser hazard than leaving it on, or second, if it provides equivalent protection and is incorporated as a safe practice for particular lifts in a site-specific erection plan. This would eliminate abuse of the technique and ensure that, when it is performed, the necessary precautions are taken. OSHA solicits information on the appropriateness of this approach, particularly with regard to the protection provided to the workers involved in such lifts.

Paragraph (b) Working under loads. The proposed requirements of paragraph (b) were patterned after requirements in § 5002 of the California Code of Regulations (Ex. 9–24D1) that regulate overhead loads for occasional unavoidable exposure.

Paragraph (b)(1) would require that routes for suspended loads be pre-planned to ensure that no employee is required to work directly below a suspended load, with exceptions for certain employees. Normally, hoisting operations can be performed from one location with a clear travel path and no overhead passes. OSHA understands, however, that overhead passes cannot be eliminated entirely due to the complexity of modern construction, which requires that many activities take place concurrently. On many building sites, for example, existing buildings, structures, streets, overhead lines and so forth make it possible to hoist construction materials from one or two storage areas. As a result, loads must be moved over the same work areas throughout the course of the job. In addition, on some large projects, such as the construction of power plants, many hoisting operations take place simultaneously. In such situations, cranes must be located throughout the site to access every part of the project. Scheduling the work to avoid moving loads over occupied work areas is often not feasible. Although the proposed requirement allows loads to be moved overhead, it requires the employer to minimize such exposure to the extent possible.

Employees engaged in the initial connection of steel and employees necessary for hooking or unhooking the load are the only employees allowed to work directly below a suspended load, because they must do so to accomplish their jobs. This provision is intended to limit the number of employees exposed to the hazard of falling overhead loads.

OSHA has allowed employees to work under overhead loads in certain other, narrowly limited, work situations. For example, a similar provision is found in the OSHA construction standards in subpart Q of this Part, Concrete and Masonry Construction. Section 1926.704(e) of that standard provides:

> No employee shall be permitted under precast concrete members being lifted or tilted into position except those employees required for the erection of those members.

Similarly, the lift-slab section, § 1926.705(k)(1), allows some employees in certain operations to work under a suspended load; in this case, the operation involves lifting the slabs into place by the jacks:

> No employee, except those essential to the jacking operation, shall be permitted in the building/structure while any jacking operation is taking place unless the building/structure has been reinforced sufficiently to ensure its integrity during erection.

When employees engaged in steel erection must work under a suspended load, such exposure must be governed by the criteria in paragraph (b)(2). These criteria require, first, that materials being hoisted be rigged to prevent unintentional displacement. In addition, safety hooks with self-closing latches or their equivalent must be used to prevent components from slipping out of the hook; this precaution eliminates the

chance of components disengaging from the hook and causing the load to fall. An equivalent device could be a hook with another type of closing device, *i.e.*, a hook with a spring-loaded gate or another type of safety hook that would provide the same level of safety as a safety hook with a self-closing latch. Finally, the loads must be rigged by a qualified rigger.

Paragraph (c) Multiple lift rigging procedure.

This section proposes specific performance and work practice requirements to be met when a steel erector chooses to lift multiple pieces of steel at one time as an alternative to single lifting of individual structural members. This procedure, also known as ''christmas treeing'' or ''tandem loading,'' is not addressed in OSHA's existing steel erection standard. Although the hazards associated with the lifting of tandem loads are substantial, the Committee believes that the practice can be made safe if the means and methods set forth in this paragraph are strictly observed. In drawing this conclusion, the Committee considered the information described in the following paragraphs.

Floor beams currently in use are comparatively light and may not be strong enough to support a bundle of structural steel safely. Thus, the steel must be picked up from the ground. Picking up single beams one at a time is not always practical, and tandem loads significantly increase efficiency. Some safety benefits are associated with this procedure, including a reduction in the length of time connectors and others are exposed to the hazards posed by overhead loads because fewer swings are required, a reduction in the time connectors must spend out on the iron because tandem loading allows them to complete their tasks more quickly, and reduced stress on the crane operator because fewer mechanical operations are required.

An OSHA letter dated September 9, 1993, from the Director of the Office of Construction and Engineering to the Regional Administrator of Region 1 describes some of the benefits of christmas treeing:

> Christmas treeing could indeed be productive and efficient on projects when erecting floor or roof filler beams, all of the same length and weight with similar details at each end of the beams. In large industrial projects where the location of the crane is much farther away from the bay under erection, christmas treeing could also prove to be efficient. Further, the practice reduces the total number of swings the crane makes in each project, thus reducing the risk of exposing the workers located in the vicinity of the crane or in the path of travel of the load (Ex. 9–13G, p. 2).

Paragraph (c)(1) would provide the criteria that must be met for a multiple lift to be permitted at all under this rule. A multiple lift rigging assembly, as defined in the definition section, must be utilized. By definition, the assembly must have been manufactured by a wire rope rigging supplier. Since this is a specialized type of lift, the rigging assembly must have been designed specifically for the particular use in a multiple lift and meet the specifics of the definition. A multiple lift may not involve hoisting more than five (5) members during the lift. Limiting the number of members hoisted is essential to safety, and the Committee has determined that five members is the maximum number that can be hoisted safely, taking into account the necessity of controlling both the load and the empty rigging. In addition, this limit on the number of members recognizes that a typical bay, consisting of up to five members, could be filled with a single lift. Too many members in a lift may create a string that is too awkward to control or allow too much empty rigging to dangle loose, creating a hazard to employees.

In addition, only structural members may be lifted during a multiple lift. Other items, such as bundles of decking, do not lend themselves to the multiple lift procedure. A typical multiple lift member would be a wide flange beam section between 10 and 30 feet long, typically weighing less than 1,800 pounds. Employees engaged in a multiple lift operation must be trained in these procedures in accordance with § 1926.761(c)(1), which contains specific training requirements for employees engaged in multiple lifts. Due to the specialized nature of multiple lifts and the knowledge necessary to perform them safely, this training requirement is necessary to ensure that employees are properly trained in all aspects of multiple lift procedures.

Paragraph (c)(2) describes how the components of the multiple lift rigging assembly are to be designed and assembled. The employer must ensure that each multiple lift rigging assembly is designed and assembled with a maximum capacity for the total assembly and for each individual attachment point. This capacity, certified by the manufacturer or qualified rigger, would be based on the manufacturer's specifications and would have a 5 to 1 safety factor for all components. Since multiple lift rigging is special rigging used only for the purpose of performing a multiple lift rigging procedure (MLRP), the rigging would be certified by the qualified rigger who assembles or the manufacturer who provides the entire assembly to ensure that the main line is capable of supporting the whole load and each hook is capable of supporting the individual members. The appropriate rigging assembly to be used is the lightest one that will support the load. Typically, one assembly is manufactured and certified for the heaviest anticipated multiple lift on the job, and this rigging is then used for all the MLRPs.

To ensure that a MLRP does not overload the hoisting equipment, the Committee recommended that OSHA propose a provision in paragraph (c)(3) that would prohibit the total load of the MLRP from exceeding either the rated capacity of the hoisting equipment as specified in the hoisting equipment load charts or the rated capacity of the rigging as specified in the rigging rating chart. Several crane manufacturers have recognized that MLRP is becoming an industry practice and have accepted the use of their cranes for this purpose provided that the crane is utilized in a manner consistent with the safe practices defined in the operator's manual and crane capacity chart (Ex.9–30). Paragraph (c)(3) proposes these provisions.

Paragraphs (c)(4) and (c)(5) address safe rigging for the multiple lift. Paragraph (c)(4) would require that the multiple lift rigging assembly be rigged with the members attached at their center of gravity and be kept reasonably level, be rigged from the top down, and have a distance of at least 7 feet (2.1 m) between the members. In practice, these procedures mean that the choker attached to the last structural member of the group to be connected would be the one attached on the rigging assembly closest to the headache ball. The next to last member to be connected would be attached to the next lower hook on the rigging assembly and so on. As each member is attached, it would be lifted approximately two feet off the ground to verify the location of the center of gravity and to allow the choker to be checked for proper connection. Adjustments to choker location would be made during this trial lift procedure. The choker length would then be selected to ensure that the vertical distance between the bottom flange of the higher beam and the top flange of the next lower beam is never less than 7 feet. Thus, when the connector has made the initial end connections of the lower beam and moves to the center of each beam to remove the choker, there

will be sufficient clearance to prevent contacting the upper suspended beam. Furthermore, although the OSHA letter referred to earlier (Ex. 9–13G) suggested that the beam spacing could be eight or nine feet, the Committee determined, and OSHA agrees, that seven feet is more appropriate since, in addition to the necessary clearance just mentioned, a typical connector could easily reach up and grab the member at seven feet but might have some trouble doing so if the spacing were greater. OSHA requests comment on whether spacing greater than 7 feet would constitute a hazard.

Once the members are ready to be set, paragraph (c)(5) would require that the members be set from the bottom up. Even though this is the only practical way that the members can be set, the inclusion of this proposed requirement promotes clarity.

Paragraph (c)(6) sets forth the proposed requirements for lowering the load. Like the hoisting of personnel platforms, multiple lifts must employ controlled load lowering when lowering loads into position for the connectors to set the members. OSHA agrees with the Committee's recommendation that such a device is essential to prevent potential accidents if the crane operator's foot should slip off the brake, the brake fails, or the load slips through the brake. When the load is over the connectors and is being lowered into place, the operator must have maximum control over the load. This proposed requirement would have prevented the July 20, 1990, fatality in Austin, Texas, referred to in Ex. 9–13G (p. 4).

Several members of the Committee stated that the use of a MLRP reduces total employee exposure to suspended load hazards as well as to the hazards associated with crane supported loads traveling horizontally. An MLRP is treated as an engineered lift and accordingly receives the full attention of the entire raising gang. The lifts are made in a more controlled fashion due to the special rigging and physical size of the assembled load. In addition, cranes used for multiple lifts must have controlled load lowering devices.

A Committee workgroup was formed to develop the MLRP section of the proposed regulatory text. This workgroup noted several additional benefits of MLRPs. For example, the increased weight of the load hoisted using an MLRP results in reduced swing, boom, and hoist speeds, which increases the amount of control the operator has over the lift. The workgroup also stated that crane operators report that the swing operation has the greatest potential for operator error and loss of load control, and therefore that reducing the number of swings enhances safety. The workgroup thus believes that the reduced number and speed of swing operations associated with MLRPs will increase safety, and that lift precision will also be increased because MLRPs require that controlled load lowering devices be used on cranes making such lifts. When the operator is working in the blind (where the connectors cannot be seen), according to the workgroup, reducing the number of swing cycles is particularly important because it minimizes the opportunity for a communication error, which could cause an accident. Furthermore, the workgroup stated that the total suspended load time and the frequency of loads passing overhead are reduced for all non-erection personnel on the job when an MLRP is being performed. This is particularly important, according to the workgroup, because these workers normally are occupied with other tasks and often do not pay attention to suspended loads that may be passing overhead. This group of employees includes those working under canopies and partially completed floor systems who cannot see hoisted material passing overhead but could be injured if a load were dropped.

In addition, when single pieces are hoisted, the emphasis is often on speed. The lift is hoisted, swung and boomed at maximum crane speed in an effort to maximize production. Under these circumstances, the Committee felt that single piece hoisting increases the potential for problems in the hoist sequence and in the final placement of each member and additionally contributes to operator fatigue.

According to the workgroup, a great safety benefit of multiple lifting is that the manipulation of the members at the point of connection limits the movement of the hoist hook, in most cases, to an area less than 10 feet in diameter and additionally requires that such movement be done at a slow speed and with maximum control. The hazard that connectors consider the most serious, that of a high speed incoming beam, is thus minimized using the MLRP process.

Section 1926.754 Structural Steel Assembly

This section sets forth the proposed requirements for the assembly of structural steel.

Paragraph (a) would require that structural stability be maintained at all times during the erection process. This would be a general requirement for any type of steel structure. Since structural stability is essential to the successful erection of steel structures, this proposed section is intended to prevent collapse due to lack of stability, a major cause of fatalities in this industry.

Paragraph (b) proposes additional requirements specifically for multi-story structures. Paragraph (b)(1) would require that permanent floors be installed as the erection of structural members progresses and that there be not more than eight stories between the erection floor and the upper-most permanent floor, except where the structural integrity is maintained as a result of the design. This paragraph is identical to existing § 1926.750(a)(1) in OSHA's steel erection standard.

Paragraph (b)(2) would prohibit having more than four floors or 48 feet (14.6 m), whichever is less, of unfinished bolting or welding above the foundation or uppermost permanently secured floor, except where the structural integrity is maintained as a result of the design. This paragraph is essentially the same as existing § 1926.750(a)(2), except for the addition pertaining to situations where structural integrity is maintained as a result of the design. The Committee recommended an exception similar to that in paragraph (b)(1) to allow for flexibility in design.

Paragraph (b)(3) would require that a fully planked or decked floor or nets be maintained within 2 stories or 30 feet (9.1 m), whichever is less, directly under any erection work being performed. This is essentially the same provision as existing § 1926.750(b)(2)(i), except that the proposed revision adds the option of installing nets in addition to the planked or decked floor options. Paragraph (b) thus retains many of the requirements of OSHA's existing steel erection rule.

Paragraph (c) Walking/working surfaces. This paragraph sets forth proposed requirements to control the slipping/tripping hazards encountered when working on steel structures. The Committee pointed out that the hazards posed by shear connectors need to be addressed in any revision of subpart R. Shear connectors are commonly found in bridges and in other types of steel erection. When attachments, like shear connectors, are shop-welded to the top flange of beams, the resulting projections can create a significant tripping hazard. Field installation of these attachments can significantly reduce exposure to this hazard. Any costs imposed by field installation of the attachments is likely to be more than offset by the increased productivity and safety for employees who walk on the top flange of the structural steel. It is much safer to walk on a beam that is not

studded with these shear connectors or otherwise covered with a temporary working surface. The installation of these shear connectors needs to be performed on a beam in a manner that allows the installer to maintain a clear walking surface.

Paragraph (c)(1)(i) would prohibit the attachment of shear connectors (such as headed steel studs, steel bars or steel lugs), reinforcing bars, deformed anchors or threaded studs to the top flanges of beams, joists or beam attachments so that they project vertically from or horizontally across the top flange of the member until after the decking, or other walking/working surface, has been installed. Additionally, paragraph (c)(1)(ii) would require that when shear connectors are utilized in the construction of composite floors, roofs and bridge decks, employees lay out and install the shear connectors after the decking has been installed, using the deck as a working platform. This paragraph would also prohibit the installation of shear connectors from within a controlled decking zone (CDZ), as specified in § 1926.760(c)(8).

SENRAC reviewed the issue of slippery surfaces caused by painted or coated steel. The Committee found that a major cause of falls in the steel erection industry is the presence of slippery walking, working and climbing surfaces in steel erection operations when fall protection is not used. The problem initially arises from the application of protective coatings on structural steel used, for example, in the construction of mills, chemical plants and other structures exposed to highly corrosive materials as well as in the construction of stadiums or other structures exposed to varying weather conditions. It is usually impractical to leave the steel uncoated and then to paint the entire structure in the field after erection. Unfortunately, steel coated with paints or protective coatings can be extremely slippery. When there is moisture, snow, or ice on coated steel, the hazard is increased. Related to this is the issue of the slipperiness of metal decking.

The problem of slipperiness created by coated steel has been discussed by industry and union safety committees for more than two decades. In the late 1970's, a study was conducted by the National Bureau of Standards. This study, according to a SENRAC workgroup, reached no definite conclusions and proposed no solution (Ex. 9–10). At the urging of labor and management during the late 1980's, a NIOSH sponsored study entitled, ''Correlation of Subjective Slipperiness Judgments with Quantitative COF Measurements For Structural Steel,'' was conducted by the University of Oklahoma's Institute for Safety & Ergonomics Studies (Ex. 9–10). This study looked into the effects that protective coatings have on the slipperiness of structural steel. Once again, according to the SENRAC workgroup, the data did not provide a sufficient basis for determining adequate means for controlling or eliminating the slippery surfaces on painted structural steel members.

Slipperiness of painted surfaces has been a problem not only in the United States but also in Canada. In the Province of Alberta the problem has been addressed by requiring the use of an anti-skid coating. Although use of this coating involves an added cost, this cost is not significant, according to those involved (Ex. 9–10).

A SENRAC workgroup considered all the information available to it and recommended that SENRAC adopt a performance standard that would mandate a minimum 0.5 static coefficient of friction (COF) for all working, walking and climbing surfaces when they arrive on the job site. The workgroup noted that the slippery surface issue was originally limited to slippery paint on structural members but had been expanded to include metal decking.

This recommendation of the SENRAC workgroup was questioned by some members of the industry, including the Steel Deck Institute (SDI) (Ex.9–87) and the Metal Building Manufacturers Association (MBMA) (Ex. 9–129). The main concern expressed by these groups was how an employer would know that it was in compliance, and, specifically, how surfaces would be tested to determine that this COF had been achieved and what instrument would be used to make this determination. An expert on slip prevention made a presentation to the Committee on how to measure the COF of a slippery surface.

The expert reviewed the primary methods for testing the slipperiness of surfaces. The first instrument was described as a drag meter. A major limitation of this device is that it will not work on dirty or wet surfaces. Thus, testing wet and dirty surface conditions which actually occur on job sites is impossible using this device. A second instrument was an articulated strut device. This device is currently being tested by the American Society for Testing and Materials (ASTM). A third device examined was a pendulum-like device. It is limited in that it requires a level floor for proper measurement. Lastly, the expert described a measuring device that he has developed that measures not COF but slip resistance. He noted that this instrument has been modified and is available as a portable unit. He described two major advantages to this device: it can test wet surfaces and it can be used in the field to test surfaces as they are actually walked on.

Following this presentation and after lengthy discussions on the slippery surface issue, the Committee concluded that conclusive studies and documented information on the subject of slippery surfaces in steel erection are not available. To obtain more information, the Committee agreed that a study should be conducted by the expert to test these slippery surfaces. This study, commissioned by SENRAC, was conducted in May of 1995 under the guidance of the SENRAC workgroup. In a final report of the study to SENRAC (Ex. 9–64), the expert summarized the methodology and findings. Seven surfaces were tested under both wet and dry conditions using two different instruments. In addition to these mechanical tests, five ironworkers ranked how slippery these surfaces felt while walking on them. The two results were compared. A minimum standard for slip resistance was set forth in the report.

The study was presented to SENRAC and suggested the following tentative draft regulatory text for discussion based on the recommendation of the study: ''all painted, coated or otherwise visibly treated skeletal structural steel members that are walking/working surfaces shall have a finish that has a slip index of .75 or higher as measured with an English XL Slip-Resistance tester or a slip index of .60 or higher as measured with a Brungraber, Mark II Slip Tester and would have to be tested in accordance with certain test procedures set out in an appendix.'' The Committee determined, based on information obtained from and presentations given by industry groups at SENRAC meetings, that the draft language was not acceptable. The industry groups providing information included the Steel Deck Institute (Ex. 9–73), the Metal Building Manufacturers Association (Ex. 9–74), the Metal Construction Association (Ex. 9–75), Bethlehem Steel (Exs. 9–106 and 9–110), the National Coil Coaters Association (Ex. 9–108), American Iron and Steel Institute (Ex. 1–109), and the American Institute of Steel Construction (Ex. 9–128). The Committee thus concluded that it could not determine a minimum value for slip resistance or COF, given all the variables to be

considered, nor could it agree on an acceptable testing method.

The Committee next decided to separate the issues of slippery surfaces on metal decking and on structural steel. Furthermore, based on perceived differences in the feasibility of compliance, there was general agreement that a requirement for structural steel could be proposed while one for metal decking should not be proposed at this time.

The Committee, consequently, recommended that OSHA propose paragraph (c)(3) to prohibit workers from walking the top surface of any structural steel member which has been finish coated with paint or similar material unless documentation or certification, based on an appropriate ASTM standard test method, is provided stating that the finished coat has not decreased the COF from that of the original steel before it was finish-coated. This documentation or certification must be available at the site and to the steel erector. Rather than define a minimum requirement for the COF, the Committee decided to ensure that the product on which the workers are walking/working is no more slippery than bare, uncoated steel, which is considered by the Committee to be safe to walk/work on, even when wet. OSHA seeks comments and additional information on this point and on the availability of methods to increase the safety of workers in this situation and to measure the slipperiness of such surfaces. There are currently two ASTM standardized test methods for determining the COF of wet surfaces, thus enabling the painted or coated surface to be tested for possible certification that the COF has not decreased (see Appendix B).

With regard to the issue of the slipperiness of metal decking, OSHA is reserving paragraph (c)(2) to allow additional time to study the slippery surface aspects of metal decking and identify a solution to the problem. A coalition of steel-producing and steel-related organizations has indicated its intention to gather data and prepare comments with respect to paragraph (c)(2). The coalition intends to identify the principal factors contributing to slip and fall injuries in steel erection, and devise feasible and effective approaches to reduce those risks (Ex. 9–151). OSHA invites additional comments and information on walking/working surfaces and the slippery aspects of metal decking from other interested parties.

Paragraph (d) Plumbing-up. Paragraph (d)(1) would require that connections of the equipment used in plumbing up be properly secured. This is identical to existing § 1926.752(d)(1) of OSHA's steel erection standard. Paragraph (d)(2) would require that plumbing-up equipment be removed only with the approval of a competent person. This is essentially the same as existing § 1926.752(d)(4), except that the word ''guys'' is changed to ''equipment'' and ''under the supervision'' is changed to ''with the approval.'' In addition, Committee members noted that, with respect to open web steel joists, the stabilizer plate requirement of proposed § 1926.757(a)(4) will greatly facilitate the plumbing-up of structures. It should be noted that several SENRAC members have raised an issue (issue #3 in section VI, Other Issues) regarding the adequacy of this performance language.

Paragraph (e) Decking. This paragraph sets forth the proposed requirements to protect employees during decking operations, including the installation of metal deck (metal deck is defined in the definition section of this standard). The Committee recognized that improper installation of decking can cause accidents. Analyses of the fatality/catastrophe reports in OSHA's IMIS system by SENRAC and OSHA staff (Exs. 9–14A, 9–42 and 9–49) indicate that falls related to decking when fall protection is not used account for a large percentage of steel erection related fatalities. The proposed requirements contained in paragraph (e) attempt to address many of the hazards which cause decking accidents.

Paragraph (e)(1) deals with some of the common hazards associated with hoisting, landing and placing of deck bundles. Many of the proposed requirements of this paragraph are adapted from the *Steel Deck Institute Manual of Construction With Steel Deck* (Ex. 9–34A).

Paragraph (e)(1)(i) would prohibit the use of bundle packaging and strapping for hoisting unless specifically designed for that purpose. Bundle straps usually are applied at the factory and are intended to keep the bundle together until it is placed for erection and the sheets are ready to be spread. Decking is bundled differently; some manufacturers design the strapping to be used as a lifting device. However, hoisting a bundle by straps that are not designed for lifting is extremely dangerous. The bundle straps can break apart or loosen, creating a falling object hazard or, if a structural member is hit by the bundle or its contents, a potential collapse hazard.

Paragraph (e)(1)(ii) would require that, if loose items such as dunnage, flashing, or other materials are placed on top of deck bundles which are being hoisted, such items must be secured to the bundles. Sometimes, to expedite unloading and hoisting, items such as dunnage or flashing are placed on the decking bundle to save time. Dunnage, for example, will be sent up with the bundle to help support it on the structure and to protect the decking which has already been installed. This proposal would prevent hoisting loose items or ''piggy backing'' unless the items are secured to prevent them from falling off the bundle in the event that it catches on the structure and tilts.

Paragraph (e)(1)(iii) would require that the landing of bundles of decking on joists be conducted in accordance with proposed § 1926.757(e)(4). This requirement is a cross-reference to the joist section of the proposed standard. Paragraph (e)(4) of that section sets out proposed criteria for landing decking on joists and will be discussed later in the preamble.

Paragraph (e)(1)(iv) also addresses the landing of bundles. Under this proposed requirement, bundles would be landed on framing members that provide sufficient support for unbanding the bundles. The bundles would have to be set in such a manner that the decking can be unbanded without losing the support of the structure. If the blocking should move while the bundle is being unbanded, the bundle would be required to have enough support to prevent it from tilting and falling into ''the hole.'' The analysis of the fatality/catastrophe reports produced from OSHA's IMIS system (Exs. 9–14A, 9–42 and 9–49) identified the improper landing of bundles of decking as a significant factor in decking accidents because it may cause a collapse of the support members and/or bundle. Proposed paragraphs (e)(1)(iii) and (iv) are intended to eliminate these hazards by providing direction for properly landing decking bundles.

Paragraph (e)(1)(v) would require decking to be secured against displacement after the end of the shift or when environmental or jobsite conditions warrant. This requirement would prevent decking from being left unsecured between shifts or overnight and would prevent decking from becoming dislodged from the structure or bundle because of environmental conditions such as high wind. A gust of wind may cause individual sheets to peel off an unsecured bundle of decking and fly through the air. Wind can also move a sheet of loose decking and create a hazard where an employee inadvertently steps onto a loose piece of decking, believing it to be secured.

Paragraph (e)(2) Roof and floor openings. This paragraph proposes steel

erection procedures for installing metal deck at roof and floor openings to prevent, among other things, the hazard of employee falls through deck openings. The Committee found such falls to be a major cause of decking accidents.

Paragraph (e)(2)(i) would require that, where structural design and constructibility allow, framed deck openings have structural members turned down to allow continuous deck installation. Requiring framed deck openings to be turned down allows continuous decking to be performed without having to cut the deck around the opening. This procedure generally applies to small openings rather than larger openings, such as elevator or mechanical shaft openings; it may not be appropriate to cut the decking around larger openings at a later time.

Paragraph (e)(2)(ii) would require that roof and floor openings be covered during the decking process so that uncovered openings do not create potential fall hazards. If the design of the structure does not allow for covering of the roof and floor openings, they must be protected in accordance with proposed § 1926.760(a)(2). Openings for elevator shafts and stairs are typically too large to cover and would usually be protected with a guardrail. To decrease even further the possibility of an employee falling through a deck opening, proposed paragraph (e)(2)(iii) would require that decking holes and openings not be cut until necessary for the construction process. Once cut, however, openings would have to be protected immediately in accordance with § 1926.760(d), which sets forth the criteria for covering roof and floor openings, or they would have to be otherwise permanently filled (i.e., filled with the equipment or structure intended for the opening, at which time the opening would no longer be a fall hazard).

Paragraph (e)(3) would require that wire mesh, exterior plywood, or the equivalent, be installed around columns where planks or decking do not fit tightly. Gauge metal, typically cut out to the profile of the column, is commonly used for this purpose and would be considered an equivalent material. This provision is identical to existing § 1926.752(h), except that the proposed provision adds ''or decking'' to make clear that the requirement to cover open areas around columns applies during decking operations both to prevent falls and to prevent items from falling through these openings to lower levels.

Paragraph (e)(4) would require that decking be laid tightly and secured to prevent accidental movement or displacement. This is essentially the same as existing § 1926.752(f) of OSHA's steel erection standard. The analysis of the fatality/catastrophe reports of data in OSHA's IMIS system (Exs. 9–14A, 9–42 and 9–49) established that stepping onto or working on unsecured decking is a factor in decking accidents.

Paragraph (e)(5)(i) would require that a derrick floor be fully decked and/or planked and the steel member connections be completed so as to support the intended floor loading. Paragraph (e)(5)(ii) would require that temporary loads on a derrick floor be distributed over the underlying support members to prevent local (spot) overloading of the deck material. These provisions contain essentially the same requirements as those in existing § 1926.750(b)(1)(i). OSHA is clarifying and updating the existing requirement, but the basic concept of the provision would be unchanged. This provision would apply mainly to multi-story structures and is intended to ensure that the derrick or erection floor has been installed with all required bolts and that final decking has been completed before the floor is loaded and the sequence of constructing subsequent levels begins. This level, which then becomes the working level for the erection of floors above, may need to support a derrick and the steel members required for the erection of those levels. Such temporary loads would have to be distributed evenly over the derrick floor to ensure stability.

Section 1926.755 Anchor Bolts

This section addresses the hazards associated with column stability and, specifically, the proper use of anchor bolts to ensure column stability. The Committee concluded that inadequate anchor bolt installation could be a factor in causing structure collapses. One participant, a connector by trade, addressed the Committee and asserted that collapses due to poor footings and anchor bolts are currently the primary cause of connector accidents (Ex. 6–3, p. 4). The Committee was in general agreement; OSHA solicits comments and additional information on the relative importance of these and other causes of structural collapse and the extent to which they result in falls during steel erection activities.

This section sets out parameters for properly installing and, when necessary, modifying anchor bolts. Paragraph (a) proposes general requirements for ensuring erection stability. Paragraph (a)(1) would require that all columns be anchored by a minimum of 4 anchor bolts. Additionally, as discussed below, this paragraph would require that column anchor bolt assemblies, including the welding of the column to the base plate, be designed to resist a 300 pound (136.2 kg) eccentric load located 18 inches (.46 m) from the column face in each direction at the top of the column shaft. The Committee listened to some presenters who were of the opinion that there may be some types of columns that may require only two anchor bolts. Also, it was contended by some participants that space limitations or structural considerations may limit the size of the base plate or the bearing surface (particularly on a masonry wall) so that it is not wide enough to allow the placement of four anchor bolts. The Committee recommended, however, that OSHA propose to require a minimum of four anchor bolts for all columns, for the reasons discussed above. In some instances, installing two anchor bolts at the column base might create a stable structure, but this would not be the case until after all of the horizontal beams have been installed and the frame has been completed. Until the frame has been completed, using two bolts could cause a hinge effect that could tip the column. Requiring all column anchorages to have four bolts eliminates the possibility of creating this hinge effect.

Additionally, since a connector with a tool belt must climb the column, which creates an eccentric load on the column, proper anchor bolt installation is doubly necessary. Anchor bolt assemblies would have to be designed to resist a 300 pound (136.2 kg) eccentric load located 18 inches (.46 cm) from the column face to prevent the column from toppling over with a worker on it. Based on a SENRAC workgroup determination, 300 pounds (136.2 kg) represents the maximum weight of an ironworker with a tool belt. Eighteen (18) inches (.46 cm) off the face of the column is the center of gravity for an ironworker climbing a column.

Paragraph (a)(2) addresses the setting of columns and would require that columns be set on level finished floors, pre-grouted leveling plates, leveling nuts, or shim packs which are adequate to transfer the construction loads. This proposed requirement is intended to ensure that the column sits on a level surface. Placing a column on a surface that is not level could allow the column to pivot and pull out the anchor bolts, creating a collapse hazard.

Paragraph (a)(3) would require that unstable columns be evaluated by a competent person and be guyed or braced where deemed necessary. If it is determined, for example, that the

anchor bolts could potentially be pulled out under field conditions, the competent person can elect to guy or brace the column.

Paragraph (b) Repair, replacement or field modification. This paragraph addresses the situation where the steel erector may be working after another contractor who has repaired, replaced or modified an anchor bolt. The steel erector often cannot visually tell when an anchor bolt has been repaired and thus will not be aware of the repair unless notified that a repair has been made. If an anchor bolt has been improperly repaired, replaced or modified, it could lead to a collapse. The intent of this proposed paragraph is to ensure that the erector has the opportunity to make sure that any work on anchor bolts has been adequately performed.

Paragraph (b)(1) would prohibit the repair, replacement or field modification of anchor bolts without the approval of the project structural engineer of record. This would ensure that any change to the original anchor bolt is performed in a manner consistent with original specifications.

Paragraph (b)(2) would require that any such approval by the project structural engineer of record also indicate any requirements for special column guying or bracing as a result of the repair, replacement or modification. If the project structural engineer of record has approved the repair, replacement, or field modification, guying or bracing may be required as a precaution.

Paragraph (b)(3) would require that, prior to the erection of a column, the controlling contractor provide written notification to the steel erector if there has been any repair, replacement or modification of the anchor bolts for that column. This proposed requirement, working in conjunction with proposed § 1926.752(a)(2), completes the communication loop. Generally, the steel erector does not have contact with the project structural engineer of record and would rely on the controlling contractor to convey any notification from the project structural engineer of record. This form of communication between the controlling contractor and steel erector is already a common jobsite practice.

Section 1926.756 Beams and Columns

This section sets forth proposed requirements for connections of beams and columns to ensure stability of the steel structure during the erection process. Recognizing that inappropriate or inadequate connections of beams and columns is inherently hazardous and can lead to collapse and worker fatalities, the Committee recommended, and OSHA proposes, a combination of performance and specification requirements to address these hazards.

Paragraph (a) General. This paragraph would require that, during the final placing of solid web structural members, the load not be released from the hoisting line until the members are secured with at least two bolts per connection, drawn up wrench-tight, or the equivalent as specified by the project structural engineer of record. This is identical to existing § 1926.751(a) of OSHA's steel erection standard, except that ''or the equivalent as specified by the project structural engineer of record'' has been added to allow for alternative types of connections such as welding, or, in the case of heavy members, allowance for more than two bolts.

Paragraph (b) Diagonal bracing. Paragraph (b) would allow solid web structural members used as diagonal bracing to be secured by a single bolt per connection, drawn up wrench-tight or the equivalent as specified by the project structural engineer of record. In many cases, solid web structural members such as channels or beams are used as diagonal bracing or wind bracing. These members technically fall under paragraph (a) above; however, since they are used in a different application, i.e., as bracing to be welded at a later time, a one-bolt connection is sufficient. These members play a different role in erection stability since they are designed to provide stability for the final completed structure and are not used as walking/working surfaces. Compliance with this provision would provide safe connections for these members.

Paragraph (c) Double connections at columns and/or at beam webs over a column. ''Double connections'' are an essential method for connecting structural steel members in some design concepts. However, these connections can pose significant hazards while erecting structural steel. When a double connection at a column is not properly executed, the resulting failure can lead to the immediate collapse of the entire structure, endangering the connector and every other worker on or around the structure. At one of the SENRAC meetings, several types of double connections were demonstrated with the use of scale model structural web members, together with a discussion of why they are hazardous and how they can be made safely. Proposed paragraph (c) would require that, when two structural members on opposite sides of a column web, or a beam web over a column, share common connection holes, at least one bolt with its wrench-tight nut must remain connected to the first member unless a shop-attached or field-bolted seat or similar connection device is present to secure the second member and prevent the column from being displaced. When seats are provided, the connection between the seat and the structural member that it supports must be bolted together before the nuts are removed for the double connection.

A double connection, by definition, is one where more than two pieces of steel are bolted together using the same (common) bolts. This can occur where two beams are bolted to opposite sides of a column web or to the opposite sides of a beam or girder. OSHA's current steel erection standard does not address this practice. When utilizing a double connection in field erection procedures, a beam is first bolted to another beam or column. Later in the erection sequence, another beam or other member is added to the opposite side of the existing connection, using the same holes and the same bolts to ''make up'' the third piece in the connection. This is the situation where the practice of double connections becomes a safety concern: the nuts must be removed from the initially placed connection bolts and these bolts are then backed out to the point where they barely grip the first two pieces of steel, so that the third piece can be lined up with the existing holes. Then the same bolts are pushed back through all the holes and the nuts are tightened on the bolts to secure the three pieces of steel together. This maneuver is extremely dangerous for the connector because of the tenuous grip of the loosened bolts and the possibility that the connector's spud wrench, which is used to align the incoming piece, may slip. If at any time during the process, the carrying member (i.e., the central member to which the other two members are being attached) reacts to residual stresses developed through welding and/or misaligned connections at lower elevations, the carrying member can move suddenly, causing the bolts or the spud wrench to become dislodged. The incoming third member can also cause problems if it bumps up against the fitting or wrench end. Additionally, crane operators, wind, building movements and the connector straining to make a tough connection impose stresses that can lead to disengagement of the connection.

Several methods for performing double connections safely were discussed by the Committee. For example, a seat lug could be inserted on one side of a column, below the

connection point. When the first beam is placed, two bolts could be inserted downward into the seat lug. This would leave the other side of the column web clear so that the new beam could be positioned without disconnecting the beam on which the connector sits. In another method, an extra set of holes on one side of the connection could be added to secure the first beam installed. This would require that the connection plate on the end of the first beam be enlarged so that two additional holes could be placed just below the double connection point. Bolts could be placed in these two holes to secure the beam to the column. Even though these two bolts would go through the web of the column, they would be located below the area where the second beam would be aligned. This again would not require the connector to disconnect the first beam to allow for the second beam to be positioned. This is the configuration used for a double connection situation in Canada, called the ''clipped end plate connection'' (Ex. 9–27).

As mentioned earlier, double connections are essential in steel erection and cannot be eliminated; they can, however, be performed safely. The proposed requirements address hazards that exist whenever there are double connections which present a danger of structural collapse. It should be noted that double connections of filler beams in the webs of girders are not considered to be an unsafe situation and are not subject to the requirements of paragraph (c). This is because once the bay is ''boxed,'' all filler beams are trapped between the girders. The connector sits on the girder while making the double connection and has no exposure to collapse of the individual members. In these cases there is no reason to require bolts to remain in the connection or seats or other devices to restrain the first member while the second is being erected. The seat or similar device requirement of this paragraph is also addressed in the corresponding requirement in the latest American National Standards Institute (ANSI) A10.13–1989, Steel Erection-Safety Requirements standard (Ex. 9–35), which provides that ''when double connections are involved, the structural detailer and fabricator shall be consulted concerning the provisions for a seat lug or flange length extension on one of the beams, and a corresponding bolt hole in the web of the column floor or beam.'' The ANSI requirement does not, however, explicitly require a seat or similar device as proposed paragraph (c) would.

Paragraph (d) Column splices. This paragraph would require that each column splice be designed to resist a 300 pound (136.2 kg) eccentric load located 18 inches (.46 m) from the column face in each direction at the top of the column shaft. This is similar to the proposed strength requirement for anchor bolts in § 1926.755(a)(1). In the same manner as anchor bolts, a column splice must be designed to allow for a worker to climb the column to perform work. These splices are joints that are temporarily fastened until the final welding or bolting is performed, and they must be sufficient to support the worker without folding over.

Paragraph (e) Perimeter columns. This paragraph would require that perimeter columns extend a minimum of 48 inches (1.2 m) above the finished floor to permit installation of perimeter cables, prior to erection of the next tier except where structural design and constructibility do not allow.

Paragraph (f) Perimeter safety cables. Paragraph (f)(1) would require that perimeter safety cables be installed during the structural steel assembly of multi-story structures. Paragraph (f)(2) would require that the perimeter safety cables consist of ½-inch wire rope or equivalent and be installed at 42–45 inches above the finished floor and at the midpoint between the finished floor and the top cable. Paragraph (f)(3) would require that where structural design and constructibility allow, holes or other devices be provided by the fabricator/supplier in, or attached to, perimeter columns at a height of 42 to 45 inches above the finished floor and at the midpoint between the finished floor and the top cable to permit installation of perimeter cables.

Proposed paragraphs (e) and (f) update and clarify the existing requirement in § 1926.750(b)(1)(iii) of OSHA's steel erection standard. They clarify that the columns need to extend far enough above the floor decking to facilitate the installation of perimeter cable. The perimeter cable must be installed at a height of 42 to 45 inches above the finished floor and at the midpoint between that cable and the finished floor level. These safety cables provide fall protection at the perimeter of the structure and are to be installed as soon as the deck has been installed to provide protection to subsequent detail crews. These perimeter safety cables are not intended to be used as lifelines or as attachment points for fall protection systems but rather as a guardrail system. The holes or other devices necessary to accommodate the safety cables would have to be provided by the fabricator of the columns prior to installation to enable the cables to be installed readily in the field after the columns have been erected. The AISC raised concerns regarding the impact of paragraph (f) on steel fabricators. The AISC is concerned that this provision will create liability for the fabricator, confuse existing contractual relationships, and create new feasibility and materials handling problems (Ex. 9–151). However, both SENRAC and OSHA believe that the enhanced safety afforded by this provision is necessary and the Agency seeks comment on this issue.

The proposed requirements in paragraph (e) and (f) do allow for cases where the design of a structure would not allow either for the columns to extend 48 inches (1.2 m) above the finished floor or for the holes or other devices to be provided by the fabricator. Proposed Appendix F provides a guideline to assist employers in complying with these paragraphs.

Section 1926.757 Open Web Steel Joists

Some of the most serious risks facing the ironworker are encountered during the erection of open web steel joists. A limited analysis of ironworker fatalities from January 1984 to December 1990, discussed in Section IV—Hazards in Steel Erection, indicated that, of the approximately 40 fatalities caused by collapse, more than half were related to the erection of steel joists (Ex. 9–14A). Although the existing OSHA steel erection standard addresses these hazards in a limited manner, this proposed section utilizes a combination of specification and performance requirements that will provide more comprehensive protection to workers engaged in these activities. SENRAC developed these proposed requirements in cooperation with the Steel Joist Institute (SJI) and many of its member companies.

Paragraph (a) General. Paragraph (a) addresses the erection of steel joists in general. Paragraph (a)(1) would provide that where steel joists or steel joist girders are utilized and columns are not framed in at least two directions with solid web structural steel members, the steel joist or steel joist girder must be field-bolted at or near columns to provide lateral stability to the column during erection. This proposed paragraph refines the existing steel erection standard provision, § 1926.751(c)(1), which is otherwise identical to the proposed requirement, by adding the words ''solid web'' before ''structural steel members'' and expanding ''bar joist'' to ''steel joists or steel joist girders.'' These additions are necessary clarification in light of technological advances in the industry.

Specifically, the existing language was developed at a time when the only structural steel involved in steel framing was solid web members. In the mid 1970's, the steel joist industry developed the steel joist girder to be used as a primary member in steel framing to support steel joists. Bolting these connections is considered preferable to other methods of connection because bolting provides the greatest safety while requiring the least amount of time and equipment.

Several other provisions in this proposed paragraph refer to special requirements for connections at the column. Paragraph (a)(2) would require that steel joists at or near the column that span 60 feet or less be designed with sufficient lateral stiffness that, when bolted at both ends, and with the bottom chord restrained at each end with the required column stabilizer plate (required by paragraph (a)(4) of this section), the joist does not need erection bridging to prevent it from rotating when an employee goes out onto it to release the hoisting cable. The existing rule prohibits placing any load on joists until erection bridging has been installed. However, since the joist at the column is the first joist in place, there is no place to attach erection bridging and, consequently, the joist itself must possess sufficient lateral stiffness to allow the erection process to progress safely.

The next provision, paragraph (a)(3), addresses a longer steel joist at the same position. The Committee preliminarily determined, and OSHA is proposing, that steel joists that span more than 60 feet located at columns must be set in tandem, i.e., two steel joists must be attached together, usually with bolted diagonal erection bridging, to ensure stability. These joists are commonly used in larger open structures such as warehouses, gymnasiums and arenas. This proposed provision would allow the use of alternate means of erection of such long span steel joists, provided that the alternative is designed by a qualified person to ensure equivalent stability and is included in the site-specific erection plan.

Proposed paragraphs (a)(4) and (a)(5) also refer to connections at the column. Paragraph (a)(4) is a specification for the column that would require a stabilizer plate to extend at least 3 inches (76 mm) below the bottom chord of the steel joist or steel joist girder. The plate would be required to have a 13⁄16 inch (21 mm) hole placed in it to provide an attachment point for guying or plumbing cables. Paragraph (a)(5) works in conjunction with paragraph (a)(4) and would require that the bottom chords of both the primary steel joist girders and the secondary steel joists at columns be stabilized to prevent rotation.

The foregoing provisions will result in a more stable primary structure upon which to erect steel joists. In addition, a stabilizer plate provides a ready attachment point for more efficient guying. The sequence of guying is essential to safety. These proposed requirements allow the erector more easily to guy the structure to prevent collapse as the steel is set in place. Moreover, compliance with these provisions should help to satisfy the stability requirements of paragraph (a)(6). Paragraph (a)(6) would prohibit the placement of steel joists on any support structure unless it has been stabilized. Again, this is essentially identical to the existing requirement found in § 1926.751(c)(3) of OSHA's steel erection standard.

Proposed paragraph (a)(7) addresses the hazard that arises when a steel joist or joists are placed on the structure and then left unattended and unattached. An example of a situation addressed by this paragraph involves lighter steel joists, under 40 feet in length, that would not require erection bridging under this section. A common practice in erecting these lighter joists, which can be set in place by hand, is to have a crane set the columns, steel joist girders, or solid web primary members as well as the boltable joists required by OSHA at the columns, thus boxing the bays. The crane would then place a bundle of filler joists at an end or, more likely, at the center of the bay, and then move on to the next bay. Because cranes are among the more costly pieces of equipment on a steel erection job, minimizing crane time at the site is cost effective. This provision would require that, when steel joists are landed on structures, they be secured to prevent unintentional displacement prior to installation, i.e., the bundles must remain intact until the time comes for them to be set. This proposed paragraph would also prevent those ironworkers who are shaking out the filler joists from getting too far ahead of those workers welding the joists, a practice that leaves too many joists placed but unattached (paragraph (b)(3) of this proposed section, discussed below, requires that at least one end of each steel joist be attached immediately upon placement in its final erection position and before additional joists are placed). A final example of a situation addressed by this paragraph would be when the exact dimensions of a piece of mechanical equipment to be installed in the decking is not known. A common practice, when this occurs, is to leave a joist unattached until the dimension is known. This paragraph requires such a joist to be secured (probably to the support structure or an attached joist) pending its attachment.

The Committee spent considerable time debating the appropriateness of requiring that certain joists be fabricated with bolt holes at the ends to allow for field bolting to the structure. As recommended by SENRAC, OSHA is proposing paragraph (a)(8), which would require that, when individual steel joists are being connected to steel structures in bays of 40 feet or more, these joists be fabricated to allow for field bolting.

This provision is necessary because certain joists that are thin and flexible can be difficult to install because of their sweep. Bolting these types of joists first allows straightening of the joist, thus returning its camber and eliminating torque. Additionally, after bolting, welding can be more easily accomplished. Note that this provision would not *require* these joists to be bolted as paragraph (a)(1) would require of the joist at the column. (Attachment requirements and the exceptions to this paragraph are discussed in connection with paragraph (b) below.) Instead, proposed paragraph (a)(8) would require that the joists arrive at the jobsite with holes pre-existing, thereby providing steel erectors with the option *either* of bolting or welding the joists. In practice, not requiring the joists to be fabricated in this manner would require the steel erector to drill holes in the joists in those cases where bolting is preferable. Just as the joist at the column is a special risk situation, long steel joists that are placed in bays of 40 feet or more have a greater tendency to twist or rotate, which creates hazards for the workers installing them.

SENRAC discussed a number of hazardous situations for which bolting joists is a safer method of attachment than welding. For example, SENRAC noted that bolting is safer whenever unattached joists could be displaced by wind or construction activity, by the movement of employees, by trailing welding leads, by accidental impact against the supporting structure by a crane or other equipment, or by harmonic motion or vibration. In addition, the vision and balance of an employee working at elevation can be impaired while wearing a welding hood, which may make bolting a safer approach in this situation. Further, joists can roll and pop welds due to the movement of an erector on the joist or the stresses caused by removing the sweep; if the weld breaks, the joist fails and may cause a structural collapse. Finally, there are special hazards

associated with welding that are not associated with bolting, such as electrical and fire hazards.

Both bolting and welding provide connections of equivalent strength, and both involve some risk. The Steel Joist Institute (SJI) asserted that welding joist ends is its recommended manner of attachment and that welding eliminates the weakening that holes in the supporting member can cause. After reviewing all relevant options, the Committee concluded that steel erectors should have the option of attaching joists either by bolting or welding. When conditions for welding are adverse, however, proposed paragraph (a)(8) would allow the steel erector to bolt the joists, thus avoiding many of the hazards mentioned above.

As noted, questions were raised about this proposed requirement. SJI and others questioned whether it is possible to bolt a joist to a masonry or similar support structure. However, the proposal clearly states that the provision allowing bolting would apply only when the joist is to be attached to a steel support structure, usually a solid web beam or a steel joist girder. Additional concerns were raised about the cost and feasibility of putting holes in the steel joists and support members (see Ex. 6–8, p. 7), but SENRAC believes that the safety and other advantages of permitting bolting are clearly more important than the disadvantages of this technique.

The American Institute of Steel Construction (AISC) pointed out that, to put the holes in the supporting beams, the fabricator of the beams must know the exact location the joist will occupy before the member can be designed and fabricated. This information is frequently not available at the time the supporting beams are being fabricated, however, because of the relationship between the joist spacing and the availability of the building's mechanical equipment design. If the design information is not available to the fabricator, this could delay the fabrication of the steel and, possibly, the project.

On the other hand, the Committee believes that requiring holes for bolting to be in place will promote better pre-erection planning and communication between all parties to the design and erection process, and may even lead to standardization of HVAC specifications, thus promoting better and safer construction sequencing. As the chairman of the SENRAC steel joist workgroup stated:

> Prior to sizing a structural member for supporting mechanical equipment, the structural engineer of record or design engineer must know the exact operating weight and physical footprint of the unit that will be imposed onto the structure. This type of information is critical in the sizing of the foundations, primary and secondary structural members (Ex. 9–142).

SENRAC was convinced that, under the present system of fast-track construction, the owner, the construction manager and the general contractors are not giving sufficient attention to the selection of mechanical equipment to be installed, despite the fact that this information is available prior to construction (the lead time required for mechanical equipment is ten times greater than the time required to design and fabricate the steel for the structure) (Ex. 9–142). Therefore, the weight and size of the mechanical equipment is known long before fabrication or erection. In addition, standardizing the requirement for bolting the structure will help the industry adopt a standard ''curb'' sized to fit the structure, as well as promote better information exchange and forward planning. Currently the lack of importance assigned to the transmission of this critical information down the line is causing portions of the structure to be constructed out of sequence, increasing the fall hazard and risk of collapse.

Another issue was raised by workgroup members concerning the situation where joists and supporting structural members arrive at the jobsite with the holes that allow field bolting in place, but the steel erector elects to weld instead of bolt them. These workgroup members were concerned that this situation would mean that the project structural engineer of record (SER) must make a determination to fill such holes with bolts. Conversely, when the joists have been bolted, the workgroup wondered whether the SER would still require the joists to be welded to the support structure. An additional concern raised is the structural impact the holes may have on the supporting steel member, i.e., the solid web beam or the steel joist girder. In the case of beams, the issue is whether, because of the holes, the size of the steel member would have to be increased. In the case of steel joist girders, the issue is whether re-engineering would be required, perhaps even to the point of welding an additional steel plate on the top chord to accommodate the bolting of the joists. OSHA raises all of these issues and solicits comment on them. As mentioned above, the Committee determined that the benefits of providing the option of bolting remained compelling and recommended that OSHA propose paragraph (a)(8).

Paragraph (a)(9) addresses the hazard posed by bridging joists before an adequate terminus point has been established. Bridging is not truly bridging until a terminus point is created. ''Bridging,'' an operation integral to steel joist construction, refers to the steel elements that are attached between the joists (from joist to joist) to provide stability. ''Erection bridging'' is defined as ''* * * the bolted diagonal bridging that is required to be installed prior to releasing the hoisting cables from the steel joists.'' ''Horizontal bridging,'' usually angle iron, is attached to the top and bottom chords of the steel joists by welding. There are several provisions in this section that would require bridging to be anchored. This means, by definition, that the steel joist bridging must be connected to a bridging terminus point. The term, ''bridging terminus point,'' is also defined in the proposed rule:

> Bridging terminus point means a wall, beam, tandem joists (with all bridging installed and a horizontal truss in the plane of the top chord) or other element at an end or intermediate point(s) of a line of bridging that provides an anchor point for the steel joist bridging.

Paragraph (a)(9) would simply require that a terminus point be established prior to installing the bridging in order to allow the bridging to be anchored. OSHA is aware that steel erection is a progressive process that requires one piece to be erected before the subsequent piece can be attached to it. This provision would require pre-planning to determine the particular location of the terminus point for the attachment of bridging. To assist in developing terminus points, SJI has developed several illustrative drawings that are found in non-mandatory Appendix C. In addition, paragraph (c)(3) of this section, discussed further below, deals with the problem of an erection sequence where the permanent bridging terminus points are not yet in existence at the time the joists and bridging are erected.

Paragraph (a)(10) would prohibit the use of steel joists and steel joist girders as anchorage points for a fall arrest system unless written direction allowing such use is obtained from a qualified person. Allowing those joists and girders that have specifically been approved for use as fall arrest system anchorage points by a qualified person recognizes both that performance criteria and manufacturer's specifications are not currently available regarding the adequacy of steel joists to meet the requirements of proposed

§ 1926.760(a)(2) but that some steel joists and steel joist girders are adequate to meet these load requirements. This paragraph would allow steel joists and steel joist girders to be used as anchorage points for personal fall arrest systems in those situations where a qualified person has stated, in writing, that such use is appropriate.

Paragraph (a)(11) addresses the potential for failure that can occur when a steel joist is modified from its original manufactured state. The Committee and SJI agreed that field modifications have had disastrous consequences in the past. To ensure against recurrences of this type, OSHA proposes to prohibit such modification without the prior approval of the project structural engineer of record.

Paragraph (b) Attachments of steel joists and steel joist girders. SJI greatly assisted the Committee in the development of this proposal by creating Tables A and B, which relate the attachment and bridging requirements of paragraphs (b) and (d) to the actual performance of particular joists. SJI arranged for Dr. Theodore Galambos, Professor of Civil Engineering at the University of Minnesota, to:

> * * * Mathematically develop a table of theoretical safe and stable lengths for all K Series Joists. The stable joist length was defined as the maximum span at which a laterally unsupported steel joist will safely support a 300 pound load placed on the top chord at the mid span of the joist (Ex. 9–19, p. 6).

Dr. Galambos developed joist stability spans using the following criteria: (1) the joists, which had top angles placed back to back with no space between the down standing legs of the chord angles, were free to rotate, i.e., were not attached; (2) the width of the bearing shoes of the joist was not made part of the equation; (3) there was no external lateral support; and (4) a 300-pound load was placed on the top chord of the joist at mid-span. A 300-pound load was chosen as representative of the weight of an average ironworker and his equipment, including a safety factor. Following a review of these results, SJI, through its members, field tested a representative sampling of the joists to verify the study. The joists were field tested by placing each joist on supports spaced to obtain the correct joist span plus 2½ inches of bearing length on the support member. The test load was applied in 25 pound increments by placing individual 25 pound steel plates on top of the top chord at mid-span of the joist. The load was applied until a total static load of 300 pounds was obtained. The results closely paralleled those predicted by Dr. Galambos' mathematical model. In addition, the field testing added another criterion: that one end of the joist would be attached, which increased the stability and helped SJI with its attachment recommendations (Ex. 9–19).

Based on the results of this stability study, SJI developed two tables that were adopted in part by the Committee. Table A, Erection Bridging for Short Span Joists, includes the lighter, K-Series joists, which run up to 60 feet in length. The K-Series open web steel joists, having joist depths from 8 inches through 30 inches, are primarily used to provide structural support for floors and roofs of buildings. Although light in weight, they possess a high strength to weight ratio (Ex. 9–141). Although Table A contains all the joists in the K-Series, Table B contains only those joists in the LH-Series that are 60 feet or less, even though the series spans through 96 feet. These joists are used for the direct support of floor or roof slabs or decks between walls, beams, and main structural members, and their depths range from 18 inches to 48 inches. Although the tables do not address the ''Deep Longspan,'' or DLH-Series, other paragraphs in this section provide specific requirements for attaching these joists. The DLH-Series joists can run up to 144 feet and have depths from 52 inches through 72 inches (Ex. 9–19). SJI limited the tables to 60 feet for two reasons: 1) the K-Series only goes to 60 feet, and 2) over 60 feet, the LH-Series are manufactured for the use of diagonal, bolted bridging only. Horizontal bridging, according to SJI specifications, can be used only with joists of 60 feet or less.

The attachment of all three series of joists is addressed in paragraph (b) of this section. The hazard addressed in that paragraph is the inadequate attachment of joists that could affect the stability of the joist and thus the safety of the employee erecting the joist. Paragraphs (b)(1) and (b)(2) would specify the minimum attachment specifications for the lighter and the heavier joists, respectively. At a minimum, the K-Series would have to be attached with either two ⅛″ (3 mm) fillet welds 1 inch (25 mm) long, or with two ½″ (13 mm) bolts. In addition, the Committee built in alternative performance language by adding the phrase ''or the equivalent'' to allow for attachment by any other means that provides at least equivalent connection strength. Similarly, at a minimum, the LH-Series and DLH-Series would have to be attached with either two ¼″ (6 mm) fillet welds 2 inches (51 mm) long, or with two ¾″ (19 mm) bolts. Again, OSHA is proposing alternative performance language, ''or the equivalent,'' for the reasons discussed above (Ex. 9–56).

Paragraph (b)(3) addresses the hazards associated with the following improper erection sequence: landing joists on the support structure; spreading them out unattached to their final position; and then attaching them. This procedure creates the potential for worker injury because joists handled in this manner may fall or the structure may collapse. To eliminate these hazards, this paragraph would require, with one exception discussed in paragraph (b)(4) below, that each steel joist be attached, at least at one end, immediately upon placement in its final erection position, before any additional joists are placed.

Paragraph (b)(4) is an exception to both the proposed (b)(3) ''attachment upon final placement'' requirement, and the proposed paragraph (a)(8) ''all joists over 40 feet must be boltable'' requirement. Paragraph (b)(4) addresses the situation where steel joists have been pre-assembled into panels prior to placement on the support structure. Pre-assembly usually involves the installation of diagonal and horizontal bridging to form a platform at ground level, which eliminates fall hazards associated with attaching bridging at elevated work stations. Placing joists on the support structure in this manner eliminates the single joist instability concerns and other hazards that led the Committee to recommend, and OSHA to propose, paragraph (a)(8) (see discussion above). Furthermore, because of the inherent stability of these pre-assembled panels, this paragraph would require only that the four corners of the panel be attached to the support structure before releasing the hoisting cables. The attachment can be either bolted or welded.

Additionally, the pre-assembled panel exception to paragraph (a)(8) allows for alternative joist erection methods such as a hybrid form of steel erection involving steel/wood-panelized roof structures, where wooden decking (dimensional wood and plywood) is attached to a single steel joist and the resulting panels are set on the support structure (Exs. 9–94, 9–95). Again, by placing joists on the support structure in this manner, the instability concerns and other hazards associated with attaching single joists, which led OSHA to propose paragraph (a)(8), are avoided (see discussion above).

Paragraph (c) Erection of steel joists. Paragraph (c)(1) would require that at least one end of each steel joist be attached to the support structure before

the weight of an employee is placed on the steel joist.

Paragraph (c)(2) addresses steel joists that span 40 feet (12.2 m) or less and that do not require erection bridging as required by Tables A and B. OSHA's existing steel erection requirements, § 1926.751(c)(2) and (c)(3), regarding steel joists and bridging, only address members 40 feet or longer:

(c)(2) Where longspan joists or trusses 40 feet or longer, are used, a center row of bolted bridging shall be installed to provide lateral stability during construction prior to slacking of hoisting line.

(c)(3) No load shall be placed on open web steel joists until these security requirements are met.

In the last 25 years, many new and different open web steel joists have been manufactured. In developing Tables A and B, SJI demonstrated that there are dozens of joists that span less than 40 feet that require erection bridging to maintain stability during erection. As to joists that do not require erection bridging in accordance with these tables, OSHA is proposing in paragraph (c)(2) that only one employee be allowed on the joist until all permanent (horizontal) bridging is installed and anchored.

Based on the Committee's recognition of the inherent danger of employees working on unstable joists, OSHA is proposing in paragraph (c)(3) that no employee be allowed on steel joists other than those addressed in paragraph (c)(2) unless the requirements of paragraph (d) of this section are met.

Proposed paragraph (c)(4) addresses the situation where the erection sequence calls for joists to be erected before the permanent bridging terminus points have been established. This situation commonly occurs in a single story structure that has masonry or architectural precast walls installed after the steel is partially or fully erected. Complying with proposed paragraph (c)(4) would involve pre-planning and the addition of temporary bridging terminus points to provide stability and prevent structure collapse in this situation.

Paragraph (d) Erection bridging. Paragraph (d) sets forth proposed erection bridging requirements for the safe erection of steel joists. Paragraphs (d)(1), (d)(2) and (d)(3) address steel joists that span 60 feet or less, over 60 feet through 100 feet and over 100 feet through 144 feet, respectively. Although, at first glance, these provisions appear similar, they reflect substantive differences that are based on engineering principles as well as the collective experience of SENRAC members. Since all of the other provisions of paragraph (d) apply across the board to all open web steel joists, breaking out these different requirements will promote ease of compliance.

Paragraph (d)(1) refers to the joists that span less than 40 feet when the tables indicate the need for erection bridging of such joists, and to all joists in bays of 40 feet through 60 feet. Although the SJI has determined that there are certain joists with spans from 40 through 60 feet that do not require erection bridging, the Committee determined that a center row of bridging should nevertheless be required to ensure stability. OSHA is accordingly proposing paragraph (d)(1). The Agency believes, because this practice is already required by OSHA's current steel erection standard, that it is already standard industry practice. Second, the loads imposed in the SJI tests were static loads, but the load imposed by an employee would be a dynamic load. Although SJI asserted that an erector ''cooning'' the joist would have a stabilizing effect on the joist, the Committee nonetheless concluded that, in bays of 40 feet through 60 feet, the row of erection bridging nearest the midspan of the steel joist should be bolted diagonal bridging (paragraph (d)(1)(i)); further, the Committee believes that the hoisting cables should not be released until after the installation of this bridging (paragraph (d)(1)(ii)). Additionally, only one employee would be allowed on these spans until all other bridging is installed and anchored (paragraph (d)(1)(iii)). Anchored bridging means that the steel joist bridging is connected to a bridging terminus point. Horizontal bridging would have to be welded or attached to each joist to be considered anchored. It is unnecessary to address anchoring for bolted diagonal bridging because, by the very nature of its connection in the erection sequence, the anchorage will have already been accomplished. However, as mentioned above in the discussion of paragraph (a)(9) of this section, a terminus point is required to be established before any bridging is installed.

Paragraph (d)(2) addresses heavier joists that span over 60 through 100 feet. Here, two rows of erection bridging would be required to be placed nearest the one-third points of the steel joists (paragraph (d)(2)(i)). Again, the hoisting cables would not be released until all the bolted diagonal erection bridging is installed (paragraph (d)(2)(ii)). Since these are heavier members and since two rows of bridging must be installed in the erection sequence, only two employees would be allowed on these joists until all other bridging is installed and anchored (paragraph (d)(2)(iii)).

Paragraph (d)(3) addresses even heavier joists that span over 100 through 144 feet. Here, all bridging is considered erection bridging and must be bolted diagonal bridging (paragraph (d)(3)(i)). Although all of the bridging addressed in paragraph (d)(2) above is bolted diagonal bridging, only the two rows nearest the third points are considered erection bridging. In the case of the largest open web steel joists, with depths up to 72 inches, all the bridging would have to be installed before the hoisting cables can be released (paragraph (d)(3)(ii)). Again, the reason for requiring bolting is that, in setting an individual steel joist, bolting is the safest and quickest way of securing the joist with the least equipment. According to proposed paragraph (d)(3)(iii), only two employees would be allowed on the spans until all the bridging is installed. In this case, since all the bridging is bolted diagonal bridging, using the term ''anchored'' would be superfluous because, as stated above, by the very nature of its connection in the erection sequence, anchoring will already have been accomplished. Additionally, a bolted diagonal bridging requirement would not apply to the attachment of the diagonal bridging to other than steel joists.

Proposed paragraph (d)(4) reflects the Committee's agreement that open web steel members that span over 144 feet are not considered joists but rather structural trusses. The erection methods for such members are more appropriately treated in the section on solid web structural members found in proposed § 1926.756, Beams and Columns, since they are larger, heavier members. Paragraph (d)(4) would limit what would be considered steel joists since steel trusses are heavy duty members, custom made and designed by a structural engineer, and usually made of structural shapes. The definition for ''steel truss'' is as follows:

Steel truss means an open web member designed of structural steel components by the project structural engineer of record. For the purposes of this subpart it is considered equivalent to a solid web structural member.

Although the term is not used in the body of this subpart, it is referred to in the definition of steel joists. The Committee believes that explaining what does not constitute a steel joist is important for clarity and in order to determine which erection provisions apply.

Paragraph (d)(5) addresses the situation where a joist is bottom chord bearing (i.e., attached to the primary

structure by the bottom chord of the joist) and would require erection bridging; or is forty feet or less and would not require erection bridging per Tables A and B. When a joist is top chord bearing, which is the usual application, the center of gravity of the joist is below the bearing surface of the support structure—a factor that helps to keep the joist stable. In a bottom bearing situation, however, the center of gravity is above the bearing surface of the support structure—a factor that increases the tendency of the joist to roll over. Under these circumstances, this paragraph would require an additional row of bolted diagonal bridging near each support where the bottom chord receives support. Typically this would require two rows of bridging. It is not uncommon, however, for a one story building, such as a convenience store that has a high glass front and a lower ceiling in the rear, to have steel joists which are bottom bearing in the front and top bearing in the back. Under this scenario, only one set of bolted diagonal bridging would be required. Consistent with the other requirements for erection bridging in this paragraph, this erection bridging would have to be installed prior to the release of the hoisting cables.

Paragraph (d)(6) proposes specifications and work practices for the placement and attachment of bolted diagonal erection bridging required by this proposed section. Paragraph (d)(6)(i) would require that this bridging be indicated on the erection drawing. The Committee discussed alternative indicators for the proper placement of the bridging and concluded that the erection drawing should be the exclusive placement indicator (Ex. 6–7, p. 11). Paragraph (d)(6)(ii) would require that the erection drawing be the exclusive indicator of the proper placement of this bridging.

Paragraph (d)(6)(iii) is intended to make the attachment of erection bridging less difficult and safer to accomplish. This work is performed at an elevated work station and frequently involves awkward bending and reaching. This provision would require that shop-installed bridging clips or their functional equivalents be provided with the steel joists. In addition, the proposal defines a ''bridging clip'' as a device that is attached to the steel joist to allow the bolting of the bridging to the steel joist. Attachments that are the functional equivalent of bridging clips would be allowed by this paragraph to provide flexibility and to allow for technological innovation should a different type of attachment be developed.

Paragraph (d)(6)(iv) addresses a hazard that is similar to that encountered with a double connection, discussed earlier. It would provide that where two pieces of bridging are attached to the steel joist by a common bolt, the nut that secures the first piece of bridging shall not be removed from the bolt for the attachment of the second. This is a work practice that is similar to a ''clipped connection'' (see definition section).

Paragraph (d)(6)(v) addresses a ''cooning'' problem rather than a tripping hazard since cooning involves straddling the top chord while walking on the bottom chord. Nonetheless, this provision works in conjunction with proposed § 1926.754(c)(1) and would require that bridging attachments not protrude above the top chord of the steel joist. This, of course, would apply both to bridging clips and their functional equivalents.

Paragraph (e) Landing and placing loads. Paragraph (e) addresses the hazards encountered in steel erection when landing and placing loads. Although work practice provisions found in § 1926.754(e) regarding the hoisting, landing and placing of deck bundles in general have already been discussed, this paragraph addresses these hazards specifically with regard to landing and placing loads on steel joists. SJI stressed that accidents occur ''when loads are placed on unsecured/unbridged joists'' (Ex. 6–8, p. 8). In addition, in the decking subgroup's analysis of the data workgroup's fatality and catastrophe reports, approximately 16 percent of the floor and roof deck fatalities were associated with collapses due to improper loading on steel joists (Ex. 9–49, p. 4).

Proposed paragraph (e)(1) of this section would apply to any employer who places a load on steel joists during steel erection. This paragraph would require that the load is adequately distributed so that the carrying capacity of any steel joist is not exceeded. The remainder of proposed paragraph (e) sets forth specific conditions that the employer must meet in addition to the general performance criteria in paragraph (e)(1).

Paragraph (e)(2) proposes general requirements that would have to be met before landing a construction load on steel joists, although an exception is allowed in paragraph (e)(4) for bundles of decking. Paragraph (e)(2) would prohibit placement of any construction loads on steel joists until all bridging is installed and anchored and all joist bearing ends are attached in accordance with paragraph (b) of this section (paragraph (b) contains attachment requirements for steel joists). A ''construction load for joist erection'' means any load other than the weight of the employee(s), the joists and the bridging bundle. Bundles of decking constitute a construction load under this definition. Under certain conditions, however, decking can be placed safely on the steel joists before all the bridging is installed and anchored. These conditions form the basis for the exceptions in paragraph (e)(4), which is discussed below.

Although a bridging bundle is not considered a construction load, it nevertheless must be landed and placed on the steel joists in a safe manner that maintains stability. Proposed paragraph (e)(3) provides for the safe and stable placement of bridging on steel joists. Usually, this bridging will be 20 foot horizontal bridging because bolted diagonal bridging is too short to extend over 3 joists. In developing this proposed requirement, the Committee, following consultation with SJI in workgroup meetings, decided to limit the weight of the bundle to 1,000 pounds because the bridging would be placed on the joists before they have been fully stabilized. One thousand (1,000) pounds would allow the joist erector to safely place the necessary bridging on the joists. To facilitate compliance with this requirement, the SJI has agreed to establish a new industry practice of bundling bridging into 1,000 pound units. Placement of the bundle is also important. This paragraph would therefore require that the bundle of joist bridging be placed over a minimum of 3 steel joists secured on at least one end. Under these circumstances, the stability of the load would be further enhanced if the load is placed near the support member. Therefore, this provision would require that the edge of the bridging bundle be positioned within 1 foot of the secured end. A clearance of at least one foot is necessary for material handling purposes and to provide access to the steel joist's attachment point. This last proposed requirement is practically identical to the proposed requirement for the placement of construction loads found in paragraph (e)(5) of this section.

Paragraph (e)(4) proposes special conditions to be met before a bundle of decking is placed on steel joists that do not yet have all bridging installed. Decking bundles are the most common construction loads imposed on steel joists. Although it is safe to place construction loads on steel joists when all the bearing ends have been attached and all the bridging is in place, there are certain commonly encountered situations where all the bridging in the

bay and all the bearing ends of the steel joists in the bay do not have to be fully installed and attached to land a bundle of decking safely. There are six conditions that would have to be met before an exception from paragraph (e)(2) is warranted.

Paragraph (e)(4)(i) would require the employer to determine, based on information from a qualified person, that the structure or portion of the structure is capable of safely supporting the load of decking. This determination would have to be documented in a site-specific erection plan available at the construction site (see proposed § 1926.753(d)).

Under paragraph (e)(4)(ii), the bundle of decking would have to be placed over a minimum of 3 joists to distribute the load. Since most decking comes in 20 foot lengths and the standard distance between joists is 5 feet, typically the load will be supported by 4 joists.

Paragraph (e)(4)(iii) would require that those steel joists actually supporting the bundle of decking have both ends attached to the support structure (the attachments would have to be in accordance with the requirements contained in paragraph (b) of this section).

At least one row of bridging would have to be attached and anchored, according to proposed paragraph (e)(4)(iv). The qualified person would determine the type of bridging, erection bridging or horizontal bridging, to satisfy this proposed requirement. To assist the qualified person in making this decision, paragraph (e)(4)(v) would provide a load limit of 4000 pounds (1816 kg) for the total weight of the bundle of decking. The Steel Deck Institute (SDI) has indicated that, in the future, manufacturers will deliver decking in bundles that will accommodate this load limit.

Finally, paragraph (e)(4)(vi) would require that the edge of the bundle be placed within a foot (0.30 m) of the bearing surface of the joist. This is the same requirement that applies to all loads in proposed paragraph (e)(5) of this section. Collapses could occur if any one of the six conditions in paragraph (e)(4) is not met. Therefore, to qualify for an exception, this paragraph would require that a site-specific erection plan be developed that indicates that these bundles of 4000 pounds or less will be placed over 3 or more joists that have been attached at both ends and have at least one completely installed and anchored row of bridging. Additionally, the edge of the bundle of decking must be placed within 1 foot of the bearing surface of the joist end for the exception to apply.

Paragraph (e)(5) addresses the proper placement of all construction loads (not just decking) on steel joists. As indicated above in the discussion of paragraph (e)(3), stability of the load is enhanced by placing the load near the support member. Therefore, this proposed provision would require that the edge of the construction load be positioned within 1 foot of the secured end. At least a one foot clearance is necessary for material handling purposes and for access to the steel joist's attachment point to the support structure.

Section 1926.758 Pre-Engineered Metal Buildings

During SENRAC's deliberations on the prerequisites for anchor bolts, beams, columns and open web steel joists, the Committee discussed many anomalies that appeared to be associated with pre-engineered metal buildings. The Committee was advised by the Metal Building Manufacturers Association (MBMA) that over 50 percent of the industrial buildings in steel erection are pre-engineered. This type of building frequently has lighter, cold formed members such as girts, eave struts and purlins (see definitions). Larger members in this type of construction are called rigid frames, a term not used in conventional steel erection. There are a large number of small specialized steel erectors who exclusively perform pre-engineered metal building erection. In light of these considerations and in an effort to facilitate compliance with this subpart, SENRAC developed a separate section for pre-engineered metal buildings.

This section sets forth proposed requirements to erect pre-engineered metal buildings safely. Pre-engineered metal buildings are defined in the definition section of this proposal. Pre-engineered metal buildings include structures ranging from small sheds to larger structures such as warehouses, gymnasiums, churches, airplane hangars and arenas.

Pre-engineered metal buildings use different types of steel members and a different erection process than typical steel erection. Many contractors erect pre-engineered metal buildings exclusively. An overwhelming majority of these erectors are small employers. The erection of pre-engineered metal structures presents certain unique hazards that are not addressed specifically by OSHA's existing steel erection standard. With the help and support of the MBMA and two other major manufacturers, the Committee developed and recommended to OSHA a section devoted to this industry. Although some of the hazards are similar to general steel erection, other hazards, such as those associated with anchor bolts, construction loads and double connections, are different.

Most of the proposed requirements in this section are similar to those in other sections of this document. Where a conflict arises between a provision in the pre-engineered metal building section and that of another section of subpart R, to the extent that the work being performed is pre-engineered metal building work, the more specific pre-engineered metal building section would apply. This section, however, should not be interpreted to mean that the other provisions of subpart R do not apply to pre-engineered metal buildings where appropriate. OSHA requests comment and information on whether there are other hazards involved in the erection of pre-engineered metal buildings that are addressed elsewhere in this subpart but not in proposed § 1926.758. If so, should provisions be added to § 1926.758 to address those hazards? Additionally, should a cross-reference be made to § 1926.760 (fall protection) and § 1926.761 (training) since these sections apply to all steel erection?

Paragraph (a) states that the erection of pre-engineered metal buildings may not begin until the site layout has been completed in accordance with proposed § 1926.752(b), site layout, site-specific erection plan and construction sequence. The requirements in that section would apply to pre-engineered metal buildings as they do to other types of steel erection.

Like proposed § 1926.755(a)(1), paragraph (b) would require that all columns be anchored by a minimum of 4 anchor bolts. This requirement is necessary to ensure stability.

The proposed requirement in paragraph (c) is unique to the erection of pre-engineered metal buildings because rigid frames are found only in this type of structure. This paragraph would require that rigid frames have 50 percent of their bolts or the number of bolts specified by the manufacturer (whichever is greater) installed and tightened on both sides of the web adjacent to each flange before the hoisting equipment is released. Like proposed § 1926.756(a), this provision would require an adequate number of bolts to ensure stability before the hoist line is released. Rigid frames are fully continuous frames that provide the main structural support for a pre-engineered metal building. They provide the support that is typically provided by columns and beams in conventional steel erection. Due to

design and load requirements, connections in rigid frames occupy a greater area and require more than two bolts upon initial connection. The remaining bolts are used to attach other members to the structure and provide stability against wind loading. To require these connections to be bolted only with two bolts would not be adequate in many cases to prevent a collapse hazard.

Paragraph (d) also pertains to stability and would prohibit construction loads from being placed on any structural steel framework unless such framework has been safely bolted, welded or otherwise adequately secured. Without proper bolting or welding to provide stability, a construction load could cause a collapse of the structure.

Paragraph (e) pertains to double connections in pre-engineered metal buildings. When girts or eave struts share common connection holes, a double connection hazard exists. As with proposed § 1926.756(c), a seat or similar connection would prevent one member from becoming displaced during the double connection activity. In girt and eave strut to frame connections where girts or eave struts share common connection holes, two provisions apply. Paragraph (e)(1) would require that at least one bolt with its wrench-tight nut remain in place for the connection of the second member unless a field-attached seat or similar connection device is present to secure the first member so that the girt or eave strut is always secured against displacement. Paragraph (e)(2) maintains that the seat or similar connection device must be provided by the manufacturer of the girt or eave strut so that it is designed properly for the intended use. Because this form of double connection is unique to pre-engineered metal building construction and might not be considered a double connection under a literal reading of proposed § 1926.756(c), this provision specifically addresses girt and eave strut to frame connections.

Proposed paragraph (f) would require that both ends of all steel joists or cold-formed joists be fully bolted and/or welded to the support structure before releasing the hoisting cables, allowing the weight of an employee on the joists, or allowing any construction loads on the joists. These proposed requirements are similar to those proposed in § 1926.757 for joists. However, due to the uniqueness of pre-engineered metal building erection and the design factors of the members, the key elements of joist erection that apply to these structures are proposed to apply more stringently in paragraph (f).

Paragraph (g) would prohibit the use of purlins and girts as anchorage points for a fall arrest system unless written direction to do so is obtained from a qualified person. Generally, purlins and girts are lightweight members designed to support the final structure. They may not have been designed to resist the force of a fall arrest system. If, however, a qualified person determines that the purlin or girt is of sufficient strength to support a fall arrest system, it may be used for that purpose. The qualified person would be required to provide written documentation of this determination. This proposed requirement is identical to the one for steel joists in proposed § 1926.757(a)(10).

Proposed paragraph (h) would prohibit purlins from being used as a walking/working surface except when installing safety systems. All permanent bridging must be in place, and fall protection must be provided to the employee installing the safety system and walking or working on the surface. Purlins are ''Z'' or ''C'' shaped lightweight members, generally less than ⅛″ thick, 2″–4″ wide on the top and up to 40 feet long. They are not designed to be walked on and, because of their shape, are likely to roll over when used as a walking/working surface if not properly braced.

Paragraph (i) addresses the placement of construction loads on pre-engineered metal buildings to prevent collapse due to improper loading of the structure. This proposed paragraph would require that construction loads be placed within a zone that is not more than 8 feet (2.5 m) from the centerline of the primary support member. Unlike conventional decking, pre-engineered metal building decking bundles are lighter, and the sheets in the bundle are staggered. This staggering means that the bundles must be set so that the end of one bundle overlaps another bundle since the lengths of the sheets vary. The zone needs to be big enough to allow for the lapping while still having the support of the structure. An 8 foot (2.5 m) zone allows enough room to meet these objectives.

Section 1926.759 Falling Object Protection

This proposed section sets forth the requirements for providing employees with protection from falling objects. A real and everyday hazard is posed to steel erection employees by loose items that have been placed aloft and that can fall and strike employees working below.

Paragraph (a) would require that all materials, equipment, and tools that are not in use while aloft be secured against accidental displacement. This proposed requirement would expand on the existing requirement in § 1926.752(a) which addresses bolts, drift pins and rivets. The Committee felt that the requirement should apply to any item that could become displaced, fall to a lower level and possibly injure a worker.

The intent of paragraph (b) is that, when it is necessary to have other work performed below on-going steel erection activities, proper overhead protection be provided to those workers to prevent injuries from falling objects. If this protection is not provided, work by other trades would not be permitted below steel erection work. The controlling contractor's responsibility would be to ensure that job conditions do not increase the exposure of employees to overhead hazards because of accelerated project schedules or other jobsite conditions. Additionally, this paragraph is referenced in proposed § 1926.752(c), which requires pre-planning to ensure that proper overhead protection is afforded to all employees during hoisting operations.

Section 1926.760 Fall Protection

Section 1926.760 addresses fall protection and would establish 15 feet as the fall distance triggering the proposed requirement for fall protection, with two exceptions: connectors working at heights between 15 and 30 feet and workers engaged in decking in a controlled decking zone at a height between 15 and 30 feet.

Subpart M, OSHA's fall protection standard for construction in general, was promulgated by OSHA on August 9, 1994 (59 FR 40672), and specifically excludes steel erection from its scope (see paragraph § 1926.500(a)(2)(iii)). Subpart M sets the general trigger height for fall protection in construction at 6 feet. The questions that SENRAC needed to address in determining the appropriate trigger height for fall protection in steel erection included: Should the trigger height for fall protection in steel erection be different from that in other construction operations? If so, why? Is it possible to protect workers engaged in steel erection for the entire time that they are exposed to fall hazards? If not, why not?

In answer to these questions, SENRAC pointed out that steel erection differs from general construction in several respects. Typically, in steel erection, the working surface is constantly being created as vertical columns are erected at various heights. Columns are connected with solid web beams or steel joists and joist girders to form an open

bay. In a multi-story building, the columns are usually two stories high. These structural members are set by connectors in conjunction with a hoisting unit—typically a crane. The first bay to be erected is part of the first tier or story; the bay of the second tier or story is formed. Initially the columns are attached to anchor bolts at the foundation. Usually, the next procedure is for the connector to install the header beams at the first level. Each floor is typically 12.5 to 15 feet in height. After an exterior bay is formed (''boxing the bay''), the filler beams or joists are placed in the bay. The connector then ascends the column to the next level, where the exterior members are connected to form a bay, and so on. In connecting the filler beams of a bay, the connector uses two bolts.

In making these initial connections, the connector is exposed to fall hazards as a result of several factors. One such factor involves the structure itself. Poor foundations and inadequate or ill-repaired anchor bolts (Ex. 6–3, p. 4) can fail, causing the column/structure to collapse and the connector to fall. The proposal first addresses this source of collapse to prevent failure in § 1926.755, ''anchor bolts'' and § 1926.757(a)(4), ''stabilizer plates,'' discussed earlier. Another factor is that both the connector and the structure are exposed to being struck by incoming steel. The proposal seeks to ''engineer out'' the risk of falling in this situation by addressing the proper hoisting and rigging of the steel members to eliminate or minimize this hazard (see discussion in § 1926.753).

The unique nature of the work itself also exposes the connector to the risk of falling. In particular, the making of double connections at columns (or at beam webs over a column) puts the connector at risk of falling due to a structural collapse. OSHA is proposing a combination of engineering controls and work practices to deal with this hazard. § 1926.756(c) would require a seat or similar device that must be secured prior to releasing the earlier connections. This prevents the column from falling away and eliminates the collapse hazard. Based on the data examined by the Committee's statistical workgroup (Ex. 9–42), SENRAC concluded that in steel erection work, relatively few worker falls occur at heights between 6 feet and 15 feet. Connections at these heights can be performed from ladders, scaffolds or personnel work platforms. The Committee, nevertheless, fully considered the use of personal fall arrest systems for heights between 6 and 15 feet.

Several fall protection manufacturers participated in discussions of this issue. Of major concern was the relationship between the total fall distance of available personal fall arrest systems (and how they are used) and the trigger height for fall protection that needed to be established for the steel erection proposal. As was presented to the Committee by one fall protection equipment manufacturer, there are many variables that collectively need consideration in understanding fall protection. Personal fall arrest systems must first limit the force on the body and second limit the total fall distance. The best description of total fall distance offered to the Committee is that total fall distance is the sum of free fall distance, deceleration distance, harness effects and vertical elongation of parts of the personal fall arrest system. Through further definition of these terms and how they interact, the total fall distance or amount of clearance needed can be determined.

Excluding anchorage connectors, there are 4 types of personal fall arrest systems commonly used by workers in full body harnesses including: (1) shock absorbing lanyards; (2) self-retracting lifelines; (3) rope grabs with vertical lifelines; and (4) shock absorbing lanyards with rope grabs and vertical lifelines. Lanyards having different lengths and which are allowed by the user to have more or less slack can result in a wide variation of free fall distance. The three common types of anchorage connectors were described to the Committee and include: (1) horizontally mobile and vertically rigid (e.g., a trolley connected to a flange of a structural beam); (2) horizontally fixed and vertically rigid (e.g., an eyebolt, choker or clamp connected to a structural beam, column or truss); and (3) horizontally mobile and vertically flexible (e.g., a horizontal lifeline suspended between two structural columns or between stanchions, attached to a structural beam, designed to support the lifeline). Each type contains various combinations of rigidity versus flexibility, both vertically and horizontally. Depending on how one configures the personal fall arrest system, the total fall distance can range from 3–23 feet and from 4–10.5 feet depending on the combination of equipment utilized (Exs. 6–10 and 9–77).

The same fall protection equipment manufacturer indicated that the lowest point of the body of a worker performing steel erection should be at least 12.5 feet above the nearest obstacle in the potential fall path when the worker is properly using a rigidly anchored personal fall arrest system of the shock absorbing lanyard type or self-retracting lifeline type. Another participant indicated that, in a worst case scenario and with no overhead anchorage point (which is a common situation in steel erection), 15.5 feet was the lowest height that a steel erection worker could be protected. SENRAC acknowledged, however, that workers in some cases could be protected at lower heights but only at the expense of serious constraints to mobility (especially with respect to connectors working with incoming steel), which, in turn, could increase the hazards (Ex. 6–11, p. 5).

In light of these considerations, the following requirements are proposed.

Paragraph (a) General Requirements. Paragraph (a) proposes the primary fall protection trigger height for steel erection activities (with certain exceptions), describes what constitutes fall protection in these circumstances, and provides specifications for alternative protection. Proposed paragraph (a)(1) would set the primary fall protection trigger height for most employees engaged in steel erection. Each employee covered by this subpart who is on a walking/working surface with an unprotected side or edge more than 15 feet above a lower level would have to be protected from fall hazards.

OSHA's existing fall protection requirements for steel erection are found in three different provisions. Section 1926.750(b)(1)(ii) of the existing steel erection standard reads as follows:

> (ii) On buildings or structures not adaptable to temporary floors, and where scaffolds are not used, safety nets shall be installed and maintained whenever the potential fall distance exceeds two stories or 25 feet. The nets shall be hung with sufficient clearance to prevent contacts with the surface of the structures below.

In addition, § 1926.750(b)(2)(i) of the existing steel erection standard addresses falls to the interior and reads as follows:

> (2)(i) Where skeleton steel erection is being done, a tightly planked and substantial floor shall be maintained within two stories or 30 feet, whichever is less, below and directly under that portion of each tier of beams on which any work is being performed, except when gathering and stacking temporary floor planks on a lower floor, in preparation for transferring such planks for use on an upper floor. Where such a floor is not practicable, paragraph (b)(1)(ii) of this section applies.

With regard to non-building steel erection (e.g., bridges, conveyor systems, etc.), exterior fall hazards on tiered buildings, and both interior and exterior fall hazards on non-tiered buildings (e.g., warehouses,

gymnasiums, etc.), § 1926.105(a) of subpart E, Personal Protective and Life Saving Equipment, applies and reads as follows:

(a) Safety nets shall be provided when workplaces are more than 25 feet above the ground or water surface, or other surfaces where the use of ladders, scaffolds, catch platforms, temporary floors, safety lines, or safety belts is impractical.

In an attempt to clarify these requirements, OSHA issued a memorandum on February 22, 1994 (Ex. 9–13F). That memo established the following enforcement policy for section 1926.750:

Citations shall not be issued to employers engaged in steel erection activities (such as, but not limited to, initial connecting, decking, welding, and bolting) during the construction of skeleton steel buildings if those employers are in compliance with the requirements of 29 CFR 1926.750(b)(2) for falls to the inside of the structure and with 29 CFR 1926.105(a) for falls to the outside of the structure. By the same token, citations shall be issued to every employer not in compliance with those standards. (For the purposes of this document, ''buildings'' means tiered buildings and non-tiered buildings).

With respect to fall hazards in other steel erection activities, such as in bridge and tower erection, 29 CFR 1926.105(a) shall be used where the fall hazard is 25 feet or more.

In 1995, OSHA further clarified its policy with respect to tiered, as opposed to non-tiered, buildings. In non-tiered buildings, the fall protection requirements in § 1926.105(a) apply to steel erection activities over 25 feet.

Proposed paragraph (a)(1) would require fall protection for most employees covered by this subpart at heights 10 to 15 feet lower than is required by OSHA's existing requirements. The exception for those employees covered by paragraph (a)(3), as discussed below, also provides protection at lower heights than does the existing standard.

Proposed paragraph (a)(2) would specify the fall protection systems required by this section. Such fall protection systems shall consist of perimeter safety cable systems, guardrail systems, safety net systems, or personal fall arrest or fall restraint (positioning device) systems. In addition, guardrail systems, safety net systems, and personal fall arrest or fall restraint systems must conform to the criteria set forth in § 1926.502 of this part (fall restraint systems would also be required to conform to the criteria for positioning device systems in § 1926.502). Section 1926.502 contains OSHA's general construction requirements for fall protection systems. Unlike general construction, however, steel erection fall protection also includes perimeter safety cable systems; use of these systems has long been an industry practice and is required by § 1926.750(b)(1)(iii) of OSHA's existing steel erection standard. It is OSHA's intent that the existing requirement for the installation of a perimeter safety cable system be maintained in this proposal. As mentioned in the discussion above on proposed § 1926.756, Appendix F of this proposal provides non-mandatory guidance regarding the installation of these perimeter safety cable systems.

The exception to the proposed general requirement that fall protection be provided at heights above 15 feet (paragraph (a)(1)) is addressed in paragraph (a)(3). According to this proposed requirement, connectors and employees working in controlled decking zones would have to be protected from fall hazards in accordance with paragraphs (b) and (c) of this section, as discussed below.

Paragraph (b) Connectors. Proposed paragraph (b) addresses the need to protect connectors from falls, to train them in the hazards associated with connecting, and to provide them with fall protection equipment. Proposed paragraph (b)(1) would require that each connector be protected from fall hazards of more than two stories or 30 feet (9.1 m) above a lower level, whichever is less. Protection at this height is currently required by OSHA's existing steel erection standard for all employees engaged in steel erection.

In addition, proposed paragraph (b)(2) requires that each connector, as defined, complete connector training in accordance with § 1926.761. Such training must be specific to connecting and cover the recognition of hazards, and the establishment, access, safe connecting techniques and work practices required by proposed § 1926.756(c) and § 1926.760(b).

Proposed paragraph (b)(3) would require that connectors be provided with a personal fall arrest or fall restraint (positioning device) system, i.e., be wearing the equipment and be provided with the means to tie-off at heights over 15 and up to 30 feet above a lower level. In the alternative, the connector could be provided with other equally effective means of protection from fall hazards in accordance with paragraph (a)(2) of this section, which would usually mean protection by the use of nets. The definition of these systems, discussed earlier, makes it clear that a personal fall arrest or fall restraint (positioning device) system would include an anchorage.

The ability to tie-off and the provision of fall protection represent a central component of the SENRAC consensus. Paragraph (b)(3) should not, however, be interpreted to mean that the connector must be tied-off at heights in the range between 15 feet and 30 feet. The Committee's consensus agreement was only that the connectors be given the means to tie-off at any time the connector chooses to do so. In addition, an anchorage of some sort must always be available: this could be stanchions with a catenary lifeline, or simply a lifeline attached to the primary beam or joist girder; a ''beamer'' (a portable anchorage that rolls along the upper or lower flange of the beam) or a nylon web strap anchor; or any other form of anchor that meets the requirements of § 1926.502 of this part. The Committee believes that under certain conditions, the connector is at greater risk if he/she is tied-off. For example, in the event of structural collapse, a tied-off connector could be forced to ride the structure to the ground. The Committee believes that the connector is in the best position to determine when to tie-off, and so the connector must have the ability to choose to tie-off.

A concern was raised as to whether such a provision would affect a connector's rights under workers' compensation laws. For example, in some jurisdictions, failure to tie-off may be construed as ''employee misconduct''. The proposal would allow the connector the choice of when not to ''tie-off'' in order to avoid a potentially greater hazard. However, states determine eligibility requirements for state workers' compensation benefits.

This exception applies only to connectors actively engaged in the placement of structural members and/or components working with hoisting equipment. Regardless of job title, when an employee has finished the ''connecting'' phase and is performing other steel erection activities (such as detailing, bolting-up and decking), the employee would no longer be considered a ''connector'' for the purposes of the exception to paragraph (a)(1) of this section and would have to be protected from fall hazards in accordance with paragraph (a)(1) or paragraph (c) of this section.

Paragraph (c) Controlled decking zone (CDZ). Paragraph (c) addresses the other exception to providing fall protection above 15 feet permitted by this proposal. This provision would allow a controlled decking zone to be established in that area of the structure over 15 and up to 30 feet above a lower level where metal deck is initially being installed and forms the leading edge of

a work area. The Committee developed a combination of specification and work practice requirements to protect employees engaged in decking activities if an employer elects to establish a controlled decking zone rather than provide fall protection as otherwise required by this section.

Proposed paragraph (c)(1) would require that each employee working at the leading edge in a CDZ be protected from fall hazards of more than two stories or 30 feet, whichever is less. Many decking operations do not lend themselves to the establishment of CDZs. For example, single story, high bay warehouse structures and pre-engineered metal buildings require decking operations that commonly take place more than 30 feet above lower levels. The exception would not apply in these situations.

An important aspect of a CDZ is controlled access. Based on the reviews of OSHA fatality data (Exs. 9–14, 9–49), some fatalities attributed to decking operations were experienced by employees not engaged in leading edge work. Proposed paragraph (c)(2) would limit access to the CDZ exclusively to those employees who are actually engaged in and trained in the hazards involved in leading edge work.

Paragraph (c)(3) addresses the physical limits of a CDZ. The employer would be required to designate the boundaries of a CDZ and clearly mark them. Control lines would commonly be used for marking the boundaries, but the performance language of the proposed requirement also allows for the equivalent, e.g., a perimeter wall. Control lines are not defined in this proposal. OSHA requests comment on whether a definition of ''control lines'' is necessary or whether Appendix D provides adequate description, since it sets the criteria for control lines or, in the alternative, should Appendix D be incorporated into the provisions of § 1926.760(c)?

The intent of the proposed requirement is to limit access to the zone and to limit the overall size of the CDZ. Assuming a typical bay to be 40 feet in its greatest dimension, the Committee recommended and OSHA proposes that the CDZ not be greater than two bays plus ten feet back from the leading edge into a fully installed deck area to allow for staging. Because some bays could be larger, a specified distance criteria based on the typical bay of 40 feet or 90 feet in each direction is proposed. Additional guidelines for assistance in using control lines to demarcate CDZs are found in non-mandatory Appendix D.

Proposed paragraph (c)(4) would require that each employee working in a CDZ have completed CDZ training in accordance with the training section of this subpart. Such training would cover recognition of the hazards associated with work in a controlled decking zone and the establishment, access, safe installation techniques and work practices required by proposed § 1926.754(e) and § 1926.760(c).

Paragraph (c)(5) addresses the specific hazard that results when full support is not achieved in the placement of metal deck. For example, in steel joist construction, metal deck sheets are typically 20 feet or longer and may span more than 4 joists that are typically spaced 5 feet apart. A hazard is created if the deck is placed so that only three joists are supporting the sheet and the deck ends are unsupported. A worker not using fall protection and stepping on the unsupported end of a deck sheet so placed is exposed to a potentially fatal fall hazard. This paragraph, therefore, would require that during initial placement, deck sheets be placed so as to ensure that the structural members provide the support as designed.

Paragraph (c)(6) addresses the hazard presented to deckers when too much decking is left unsecured. The installation of metal deck requires it to be placed on the structural members, unsecured, at control marks to allow for proper alignment. As a result of the physical dynamics of the bundle during shipping, metal deck may have different widths. For example, in a typical bundle of decking, the bottom sheet can be wider than the top sheet by an inch or more. Due to these variations, field adjustment of the decking is necessary to fit the bay at the control marks. The proposal would limit the area of unsecured deck to 3000 square feet (914.4 m^2) to restrict the exposure of employees engaged in the placement of these deck sheets. Given the dimensions of a typical bay (a typical bay is approximately 900 S.F.), 3000 square feet was determined to be an appropriate limit that would allow for the decking to be placed and alignment to be performed prior to tack welding. This limit would thus greatly reduce the hazards associated with large areas of decking being left unattached and unattended.

Proposed paragraph (c)(7) addresses the hazard in leading edge work that arises when an employee turns his/her back to the leading edge while attaching deck sheets. After the decking has been adjusted to fit the bay, a safety deck attachment (see definition section) must be performed with at least two attachments per panel. When such attachments are performed on the laps (although to do so is not required), there would be four attachments per panel. Safety deck attachments are usually done by tack welding the panel but can also be achieved with a mechanical attachment, such as self-drilling screws or pneumatic fasteners. The proposed provision would require that such attachments be made from the leading edge back to the control line to protect the employee from inadvertently stepping off the leading edge.

Paragraph (c)(8) would prohibit final deck attachments and installation of shear connectors in the CDZ. These activities are not leading edge work and would not be permitted in a CDZ. Employees performing this work can be readily protected from falls by the use of conventional fall protection, e.g., guardrails.

Paragraph (d) Covering roof and floor openings. Paragraph (d) addresses proper covering of roof and floor openings, which is required by proposed § 1926.754(e)(2), during steel erection to prevent employees from falling through them. Paragraph (d)(1) would require that coverings of roof and floor openings be capable of supporting, without failure, the greater of either 30 pounds per square foot for roofs and 50 pounds per square foot for floors or twice the weight of employees, equipment and materials that may be imposed on the cover at any one time. The pounds per square foot specifications are based on the strength requirements for steel roof and floor decks in the SDI Manual of Construction with Steel Deck (Ex. 9–34A). The performance language is based on subpart M criteria for covers (§ 1926.502(i)). This would allow for adequate protection for employees who may walk on, or for any equipment that may be placed on, a floor or roof covering.

Paragraph (d)(2) would require that all covers be secured when installed so as to prevent accidental displacement by the wind, equipment or employees. Requiring that all covers be secured against displacement eliminates the fall hazard. Additionally, paragraph (d)(3) would require that all covers be painted with high visibility paint or be marked with the word ''HOLE'' or ''COVER'' to provide warning of the hazard so as to prevent an employee from inadvertently removing the cover.

Paragraph (d)(4) would provide that smoke domes or skylight fixtures which have been installed are not considered covers for the purposes of this section unless the strength requirements of paragraph (d)(1) above are met. A

common cause of falls is employees leaning or sitting on skylights or smoke domes which will not support their weight. These structures may not be capable of supporting the load and may give way, causing a fall. Consequently, unless they have adequate strength, these structures cannot be relied upon to protect employees from falls. OSHA invites comment on whether these skylights and smoke domes would be more appropriately treated in § 1926.754(e)(2), which addresses roof and floor openings, and in particular *permanently filling openings*, rather than in this section, § 1926.760(d), which addresses *covers* for roof and floor openings.

Paragraph (e) Custody of fall protection. Proposed paragraph (e) addresses fall protection, usually perimeter safety cables, initially installed and maintained by the steel erector but remaining on the site after steel erection has been completed. If no provision for the proper maintenance of such fall protection is made, the equipment could fall into disrepair and no longer function properly. Employees of contractors arriving later might rely on this potentially dangerous fall protection, creating a false sense of security in these workers. Paragraph (e) would require that fall protection provided by the steel erector not be left in an area to be used by other trades after the steel erection activity has been completed unless the controlling contractor or its authorized representative has directed the steel erector to leave the fall protection in place and has inspected and accepted control and responsibility of the fall protection prior to authorizing persons other than steel erectors to work in the area. This proposed requirement is consistent with the AISC Code of Standard Practice (Ex. 9–36, p. 15) which states:

> When safety protection provided by the erector is left remaining in an area to be used by other trades after the steel erection activity is completed, the owner shall be responsible for accepting and maintaining this protection, assuring that it is adequate for the protection of all other affected trades, assuring that it complies with all applicable safety regulations when being used by other trades, indemnifying the erector from any damages incurred as a result of the safety protection's use by other trades, removing the safety equipment when no longer required and returning it to the erector in the same condition as it was received.

Section 1926.761 Training.

The OSHA steel erection proposal has many new requirements involving more widespread use of personal fall protection equipment and special procedures for making multiple lifts, for decking activities in controlled decking zones and for connecting. Early in the development of these new requirements, the Committee recognized the need for a separate training section. The requirements proposed in § 1926.761 would supplement OSHA's general training and education requirements for construction contained in § 1926.21.

Proposed § 1926.761(a) would require that instruction on fall hazards and other specified hazards associated with steel erection activities and appropriate corrective actions be provided to employees by a qualified person.

A ''qualified person,'' as defined in existing § 1926.32 and restated in the definition section of this proposal, means one who, by possession of a recognized degree, certificate, or professional standing, or who by extensive knowledge, training, and experience, has successfully demonstrated the ability to solve or resolve problems relating to the subject matter, the work, or the project.

Proposed paragraphs (b) and (c) specify particular training that would have to be provided by the employer to employees who are exposed to the specified steel erection hazards. Paragraph (b) would require that the employer provide a training program for all employees exposed to fall hazards. The program would have to include training and instruction in the recognition and identification of fall hazards in the work area; the use and operation of perimeter safety cable systems, guardrail systems, personal fall arrest systems, fall restraint (positioning device) systems, safety net systems, controlled decking zones and other protection to be used; the correct procedures for erecting, maintaining, disassembling, and inspecting the fall protection systems to be used; the procedures to be followed to prevent falls to lower levels and through or into holes and openings in walking/working surfaces and walls; and the fall protection requirements of § 1926.760.

In addition to fall hazards, the Committee identified certain activities that would require specialized training due to the hazardous nature of the activities. Accordingly, paragraph (c) requires such training for employees engaged in multiple lift rigging procedures (MLRP), connecting activities and work in controlled decking zones.

Paragraph (c)(1) proposes additional training for employees performing MLRPs. This training would include instruction in the hazards associated with multiple lifts and the proper procedures and equipment to perform multiple lifts safely, as proposed in § 1926.753(c).

Paragraph (c)(2) would require the employer to ensure that each connector has been provided training in the hazards associated with connecting, and in the establishment, access, proper connecting techniques and work practices proposed in § 1926.760(b) (fall protection) and § 1926.756(c) (double connections).

Paragraph (c)(3) would require additional training for controlled decking zone employees. The training must cover the hazards associated with work within a controlled decking zone, and the establishment, access, proper installation techniques and work practices required by § 1926.760(c) (fall protection) and § 1926.754(e) (decking operations).

This proposed section has been drafted to allow the employer a reasonable degree of flexibility in developing a training program and conducting training. OSHA recognizes that there are differences in the techniques that will be successful with different employees. Therefore, the proposed section does not limit the employer by specifying the manner in which the training must be conducted. Similarly, the specific content of the training course has only been generally addressed because different topics must be taught to address the variations associated with different steel erection activities and to cover hazards specific to each workplace.

The employer may choose the training provider. This could include contracting with an outside professional training company to train employees or developing and conducting the training program itself. In either case, the employer can choose the provider, method and frequency of training that are appropriate for the employees being trained. In addition, each employee must have been provided training prior to hazard exposure.

Appendices to Proposed Subpart R

The following appendices neither create additional obligations nor eliminate obligations otherwise contained in the standard. They are intended to provide useful, explanatory material and information to employers and employees who wish to use it as an aid to understanding and complying with the standard.

Appendix A to Subpart R—Guidelines for Establishing the Components of a Site-Specific Erection Plan (Non-Mandatory)

As explained in the discussion for the proposed section governing site-specific

erection plans, this appendix was developed by SENRAC as a non-mandatory set of guidelines provided to assist employers in complying with the requirements of proposed paragraph § 1926.752(d). If an employer follows these guidelines to prepare a site-specific erection plan, it will be deemed as complying with the requirements of paragraph § 1926.752(d). OSHA welcomes comment on the adequacy of these guidelines.

Appendix B to Subpart R—Acceptable Test Methods for Testing Slip-Resistance of Walking/Working Surfaces (Non-Mandatory)

Appendix B is provided to serve as a non-mandatory guide to assist employers in complying with the requirements of proposed paragraph § 1926.754(c)(3). The two nationally recognized test methods referred to in appendix B, ASTM F1678–96 (Standard Test Method for Using a Portable Articulated Strut Slip Tester) and ASTM F1679–96 (Standard Test Method for Using a Variable Incidence Tribometer), would provide the protocol for testing skeletal structural steel surfaces to obtain the documentation or certification required by proposed § 1926.754(c)(3). OSHA welcomes comment on the testing procedures contained in this appendix.

Appendix C to Subpart R—Illustrations of Bridging Terminus Points (Non-Mandatory)

Appendix C is provided to serve as a non-mandatory guide to assist employers in complying with the requirements of proposed paragraph § 1926.757(c)(3). Although the appendix does not show all possible bridging terminus points, the illustrations provide examples of common bridging terminus points. OSHA solicits information and comment on this proposed appendix.

Appendix D to Subpart R—Illustration on the Use of Control Lines to Demarcate Controlled Decking Zones (CDZs) (Non-Mandatory)

Appendix D is provided to serve as a non-mandatory guide to assist employers in complying with the requirements of proposed paragraph § 1926.760(c)(3). If the employer follows these guidelines to establish a control line to demarcate a CDZ, OSHA will accept the control line as meeting the requirements of paragraph § 1926.760(c)(3). This appendix neither creates additional obligations nor eliminates obligations otherwise contained in the standard. It is intended to provide useful explanatory material and information to employers and employees who wish to use it as an aid to understanding and complying with the standard. OSHA solicits information and comment on this proposed appendix.

Appendix E to Subpart R—Training (Non-Mandatory)

Appendix E is provided to serve as a non-mandatory guide to assist employers in complying with the requirements of proposed paragraph § 1926.761. Even before the existence of OSHA, the Ironworkers International Union provided apprenticeship training in steel erection to its members. This training has been approved by the U. S. Department of Labor's Bureau of Apprenticeship Training for over forty years. As soon as this program is updated to reflect the requirements of this new subpart R, training under this program will be deemed as complying with the training requirements of § 1926.761. As stated in Article XI of the current approved National Apprenticeship and Training Standards for Ironworkers:

> The [Ironworkers Joint Apprenticeship] Committee shall seek the cooperation of all employers to instruct the apprentices in safe and healthful work practices and shall ensure that the apprentices are trained in facilities and other environments that are in compliance with either the occupational safety and health standards promulgated by the Secretary of Labor under [the OSH Act] or state [plan] standards * * * (Ex. 9–139, p. 8).

OSHA does not intend that training approved by the U.S. Department of Labor Bureau of Apprenticeship be the only training deemed to meet the requirements of § 1926.761. Employers may choose to provide their own training, provided that it fulfills the requirements of § 1926.761. The Agency invites comment on this proposed appendix.

Appendix F to Subpart R—Installation of Perimeter Safety Cables (Non-Mandatory)

Appendix F is provided to serve as a non-mandatory guide to assist employers in complying with the requirements of proposed paragraph § 1926.756(f), when perimeter safety cables are used to protect the unprotected side or edge of a walking/working surface. If an employer elects to follow the guidelines of this appendix, the perimeter safety cable system shall be deemed to be in compliance with the provisions of § 1926.756(f). OSHA solicits information and comment on this proposed appendix.

VI. Other Issues

As indicated above, the Committee has reached consensus on the regulatory text. Although no negotiation sessions have been held since December 1995, Committee members have continued to provide technical assistance to OSHA staff in developing the ''Summary and Explanation'' section of the proposed rule. During this period, a number of additional concerns have been raised by Committee members, SENRAC workgroup members and OSHA staff. OSHA has determined that, rather than reopening the negotiations, these issues can be adequately addressed in the normal ''§ 6(b) rulemaking process'' that will follow the publication of this proposal. Normal rulemaking includes a comment period on the proposed rule, an informal public hearing, and, for those who have elected to participate in the hearing by filing a ''Notice of intent to appear'' (see Public Participation section), a post-hearing comment period. In addition, OSHA has decided that, in order to develop a complete record and to reach as many stakeholders as possible, these and other issues should be raised in this section of the proposal. The public is specifically requested to comment on all relevant issues, including the following:

1. Some hazards currently addressed by the existing requirements in § 1926.105(a) may not be adequately addressed in proposed subpart R (Ex. 9–152). Proposed § 1926.754(b)(3), for example, would require that, in multi-story structures, a fully planked or decked floor or nets be maintained within 2 stories or 30 feet, whichever is less, below and directly under any erection work which is being performed. There was a difference of opinion among the Committee members as to whether the primary purpose of this requirement is to constitute fall protection or protection from falling objects. The Committee considered this issue and concluded that the fully planked, decked or netted floor provides fall protection just as the netting on a bridge provides fall protection. Comment is requested on whether a fully planked floor provides fall protection for falls of up to 30 feet.

Existing § 1926.750(b)(1)(ii) and § 1926.105(a) provide that for buildings and other structures not adaptable to temporary floors, safety nets must be provided when workplaces are more than 25 feet above the ground or water surface, or other surface where the use of ladders, scaffolds, catch platforms, temporary floors, safety lines, or safety belts is impractical. These requirements have been applied to fall hazards on

bridges, as well as fall hazards to the outside of any steel erection structure, including those adaptable to temporary floors. However, bridges would not be covered by the proposed § 1926.754(b)(3), which only applies to multi-story buildings. Therefore, public comment is requested on whether a requirement should be added to subpart R to continue to require nets for bridges over water. It is suggested that a provision could be inserted in § 1926.754(b)(2) and read as follows:

For bridges, safety nets shall be provided when workplaces are more than 30 feet above a water surface, § 1926.760(a) notwithstanding.

Comment is requested on the need for this requirement and the appropriateness of the suggested language as well as any other recommended course of action on this issue.

Additionally, the proposal would raise the height at which fall protection is required for connectors exposed to fall hazards to the outside of a building from 25 feet (existing § 1926.105) to 30 feet (proposed § 1926.760(b)(1)). Comment is also requested on the appropriateness of making this change in the standard.

2. Proposed § 1926.754(c)(3) uses the term finish-coated to describe paints or similar materials applied to steel members. It also prohibits workers from walking on a steel member that has been finish-coated without documentation that the finished coat has not decreased the COF of the steel being coated. OSHA solicits information and comments on what should or should not be considered finish-coated. Should all single coat primer paints or coatings be exempted from being considered finished coats? Are there any primer paints that should not be exempted, such as epoxy primers? Should galvanized coatings be exempted? In addition, OSHA has received information from the Structural Steel Painting Council (SSPC) that the term ''finished coat'' already has a common understanding in the industry and that it refers to paint applied to steel *members* after the steel members have been erected (Ex. 9–152). Since SENRAC is concerned with the slipperiness of painted steel *before* the erection of the members, should this requirement be re-worded to avoid potential confusion? Since slip resistance information is now attainable (see, for example, Appendix B), please submit data to support your views. OSHA also requests comment on whether the requirement should avoid using the term ''finish-coated'' at all; for example, should it simply state: ''Workers shall not be permitted to walk the top surface of any structural steel member installed after [effective date of final rule] which has a COF less than that of the original steel.''

3. The plumbing-up requirements in the proposal have been questioned as to whether they are specific enough to ensure structural stability as required by proposed § 1926.754(a) (Ex. 9–152). Public comment is requested on whether additional plumbing-up requirements are necessary to protect employees. It has been suggested that the following provisions be added to § 1926.754(a):

(1) Plumbing-up equipment shall be installed in conjunction with the steel erection process to ensure the stability of the structure; and

(2) Plumbing-up equipment shall be in place and properly installed before the structure is loaded with construction material such as loads of joists, bundles of decking or bundles of bridging.

Comment is requested on the need for these requirements and the appropriateness of the suggested language as well as any other recommended course of action on this issue.

4. The preamble identifies the provisions in the standard which are new or which are changed from the provisions of the existing standard. OSHA believes that many employers are already following the procedures that would be required by many of these proposed provisions. OSHA will evaluate, on the basis of all the evidence submitted to the public record, the likely effectiveness of the proposed revised and new provisions. To assist OSHA in this area, the public is asked to provide information on the following issues:

a. Public comment is requested on the feasibility and effectiveness of the proposed changes. OSHA solicits information on the degree to which implementation of the proposed changes would reduce the occurrence or severity of accidents;

b. Public comment is requested on the amount of any costs or savings that have not been identified by OSHA (see Section VII of this preamble—Summary of the Preliminary Economic and Initial Regulatory Flexibility Analysis) which might result from the proposed changes.

5. In discussing the scope of proposed subpart R, the Committee originally developed an extensive list of structures and activities that could involve steel erection work for inclusion in an appendix that would be referenced by paragraphs (a) and (b) of § 1926.750. However, the Committee subsequently decided that the list should be placed in the standard itself in notes to paragraphs (a) and (b), respectively. OSHA raised some concerns with this approach related primarily to how the courts might interpret a scope section with such a long and detailed list. The Agency suggested that a listed structure or activity might erroneously be viewed as being within the scope of subpart R, whether or not steel erection was taking place. Conversely, failure to include an activity or structure on the list might indicate that the activity is never to be covered by subpart R, since the list appears to be so inclusive. Moreover, the Agency stated that if the Committee's goal was to make the scope as broad as possible, it could accomplish this goal more directly by specifying instead what is *not* covered by the subpart. OSHA contended that voluminous lists of examples of covered workplaces are not appropriate in regulatory text. Nonetheless, the Committee reached consensus that the lists of structures and activities be placed in the standard as notes to paragraphs (a) and (b). OSHA requests comment on the scope and application section and specifically on whether these notes clarify the scope and application of the proposed standard; whether they restrict or expand the scope of what is considered steel erection; and whether such restriction or expansion is appropriate. In addition, OSHA notes that while the lists indicate workplaces which might be covered by subpart R, they would be covered only when steel erection work is being performed. The Agency seeks comment on whether the lists are necessary in light of that limitation.

6. Proposed § 1926.755(a) sets forth general requirements for ensuring erection stability. Paragraph (a)(1) would require that all columns be anchored by a minimum of 4 anchor bolts. Additionally, this paragraph would require that column anchor bolt assemblies, including the welding of the column to the base plate, be designed to resist a 300 pound (136.2 kg) eccentric load located 18 inches (.46 m) from the column face in each direction at the top of the column shaft.

OSHA invites comments on the following and any other relevant questions: Should these requirements include a 4:1 safety factor for the design of the column base to be consistent with other OSHA standards? Should the requirements call for the washer and nut to be placed and hand tightened at all four anchor bolts before the hoist line of the column is released to ensure that stability of the column is achieved? Should a cross-reference be provided to

§ 1926.752(a)(1) since the anchor bolts would have to be designed for the 300 lb. eccentric load when the concrete in the footings, piers and walls or the mortar in the masonry piers and walls has attained either 75 percent of the intended minimum compressive design strength or sufficient strength to support loads imposed during steel erection? Would a designer miss the provision in § 1926.752(a)(1) without a cross-reference?

7. Proposed § 1926.756 sets forth requirements for connections of beams and columns to ensure stability of the steel structure during the erection process. However, the proposal does not have any specific requirements for cantilevered beams, which exert different forces on the connection than does a typical end-connected beam. A number of accidents have occurred because of inadequate connections of cantilevered beams during erection. Is a provision needed to require that, ''after proper evaluation of the span and the intended load by a competent person, cantilevered beams shall be secured with the number of bolts necessary to ensure stability.''

Additionally, with regard to all connections, in some cases bolts of lesser diameter and strength than the permanent bolts specified are used on a temporary basis. If temporary bolts are used and prove to be of insufficient strength, the intent of the proposed paragraph would not be met. Is it necessary to require that the bolts used ''be of the size and strength shown on the construction documents'' to avert this situation? Comments addressing these concerns are requested.

8. Proposed § 1926.757(a)(8) and § 1926.757(d)(1) introduce the term ''bay.'' Should this term be defined in the steel erection standard or is there a common understanding of the term? In addition, since the two provisions refer to specific sizes of bays, should the standard include the particulars of measuring a bay?

9. Section 1926.757 of the proposal addresses SJI specification joists. There are joists being manufactured that are not constructed to SJI specifications (for example joists in excess of 144 feet). Should the joist requirements of the steel erection standard include provisions for non-SJI specification joists?

10. In the course of SENRAC's deliberations, OSHA staff, NIOSH and Committee Workgroups made a considerable effort to study the injuries and fatalities resulting from steel erection activities (Exs. 9–13E, 9–14A, 9–15 and 9–42) so that SENRAC could determine what caused the incidents which resulted in those injuries and fatalities and could propose appropriate protective and preventive measures.

Some of the SENRAC participants suggested that the available data were unreliable and did not accord with their experience. They believe that structural collapse is the major cause of injuries and fatalities in steel erection. The Committee therefore decided that the best way to protect a worker from a fall is to eliminate structural collapses. The Committee believes that the usefulness of fall protection in steel erection is greatly reduced in a collapse situation. However, others have evaluated the fatality data available to OSHA and determined that fall fatalities not involving collapses exceed those which involve collapses by a factor of five. Should subpart R focus, to a greater extent, on the use of fall protection to prevent fatalities? OSHA seeks comments and information regarding the characterizations of the injury and fatality data and the conclusions to be drawn from that data. Also, the Agency solicits additional information and data on the causes of injuries and fatalities experienced by employees erecting steel structures.

11. Proposed 1926.760(b) and (c) set alternative fall protection measures for employees performing the initial connection of structural steel and employees performing the installation of metal deck. Proposed subpart R does not require employers to demonstrate that the use of conventional fall protection (guardrails, safety nets or personal fall arrest systems) would be infeasible or would create a greater hazard in these cases (as do the alternative provisions to fall protection found in § 1926.501(b)(2), (12) and (13)). Currently, under § 1926.105(a), OSHA requires that employers provide fall protection to workers who are installing roof decking on non-tiered steel structures over 25 feet. Employers comply with this requirement in several ways, including the use of personal fall arrest systems. Proposed § 1926.760(b)(3) permits employers to use a CDZ in place of fall protection.

Should the Agency require employers to demonstrate that the use of fall protection is infeasible or would create a greater hazard before allowing employees to follow alternative measures for connecting or for decking operations? Should the standard specify that the connector determine that there is a greater hazard to tying-off before electing not to tie-off? OSHA seeks comments, suggestions, information and data regarding how a steel erection employer should determine what fall protection is appropriate for its affected employees.

12. Proposed § 1926.760(b)(3) requires that connectors be provided with fall protection equipment and an available anchorage but leaves the decision to the employee as to whether to tie-off. Some steel erection companies currently require employees to use fall protection at all times above six feet. Is it appropriate to permit some work above this height to be performed without fall protection? Should the standard allow employees the option of not tying-off? Should it be the responsibility of the employer to determine whether and what conditions warrant the use of the fall protection? Should the standard provide more specific criteria to indicate when the connector is required to be tied-off? Are there particular operations for which there is evidence that tying-off either is infeasible or poses a greater hazard to connectors? The Agency requests comments and supporting data on these and related issues.

13. Proposed paragraph § 1926.760 (a)(1) sets the general trigger height for fall protection in steel erection at 15 feet. Do the conditions (discussed in the preamble) justify the lack of fall protection at 6 feet, as is required by subpart M of OSHA's construction standards for most other construction activities? Are there activities or structures in the scope of proposed subpart R for which fall protection should be provided at other heights (either lower or higher)?

14. Proposed paragraphs 1926.760 (b) and (c) provide exceptions to the 15 foot trigger height requirement for connectors and employees working in an established CDZ. Do the conditions discussed justify the alternative trigger height requirements for these workers? Are the alternative protective requirements in those paragraphs adequate to protect connectors and CDZ workers from falls? Is there evidence or data demonstrating that this is the case?

15. Proposed 1926.753, Hoisting and Rigging, would allow employees to work under overhead loads under certain situations (proposed paragraph (b)— Working Under Loads and proposed paragraph (c)— Multiple Lift Rigging Procedure). In addition, proposed paragraph (a)(4) would allow the use of cranes and derricks to hoist employees on a personnel platform without a showing that methods are infeasible or pose a greater hazard (see 1926.500). Does the rationale (discussed in the preamble) justify the allowance of these procedures? Are data available to determine that hoisting using a

personnel platform is safe if the specified conditions are met?

16. Proposed § 1926.761 provides the training requirements for steel erection. Included in these requirements are provisions that are specifically and uniquely found in steel erection. Re-training requirements, a common element of the training provisions in OSHA construction standards, however, were rejected by the Committee. Should all steel erection employees be required to undergo refresher training? If so, what intervals are appropriate for such training? If such training is not required in all cases, are there certain conditions or situations that do warrant additional re-training? If, for example, an employee demonstrates (by using improper procedures, not following procedures, etc.) that the employee has not retained the requisite understanding or skill or there have been significant changes in fall protection equipment or other techniques or technologies since the employee was trained, should the standard require re-training? Under what circumstances, if any, should an employee be re-trained?

An additional training requirement that is a part of many steel erectors' safety procedures is the so-called ''tool box'' meeting. Steel erection involves progressive sequences of erection, so that one day's shift may involve an entirely different workplace than the day before, possibly with different or unique new hazards. Would it be appropriate for OSHA to require a brief safety meeting prior to each shift or each change of activity to inform employees of identified hazards to be encountered during that shift and to make the employees aware of any particular procedures, equipment and work practices that will be used? What has been your experience with such meetings? Have you found them helpful? Protective? Cost-effective? Please provide any information or data to support your responses.

Proposed 1926.761 does not specify the details of required training programs to allow the employer flexibility in designing training programs. Do the training requirements provide adequate direction or should the frequency of training and the initial administering of training be addressed?

17. Based on the reasons stated in the preamble, is the lack of a specific requirement for slippery metal deck surfaces (reserved paragraph (c)(2) of proposed 1926.754) justified or is there adequate information to support such a requirement?

18. Proposed 1926.752(d) allows employers to elect to develop a site-specific erection plan if compelled by site-specific considerations. Is there adequate support for not requiring a site-specific erection plan for all sites? Are there more (or fewer) situations than those identified in proposed 1926.752(d) for which the development of a site-specific erection plan would be appropriate? Does the lack of a required site-specific erection plan for every site reduce the protectiveness of the proposed standard in situations where providing such plans is feasible? OSHA solicits information on the effectiveness of erection plans and employers' and employees' experiences in developing and implementing them.

19. OSHA invites comments and information on proposed § 1926.760 (e). Specifically, to what extent do steel erection employers currently turn over fall protection systems to general contractors or follow-up contractor employers when steel erection operations have been completed? To what extent do ''controlling contractors'' currently assume responsibility for fall protection systems installed by steel erectors, as would be required by proposed § 1926.760 (e)(1) and (e)(2)?

20. There are six provisions in the proposal that exempt the employer from certain requirements of the standard where the design or constructibility would not allow or would eliminate the need to comply with the requirement. These are § 1926.754(b)(1), § 1926.754(b)(2), § 1926.754(e)(2)(i), § 1926.754(e)(2)(ii), § 1926.756(e), and § 1926.756(f). What criteria should be used to determine whether design or constructibility would allow the exemption? Should the employer be required to demonstrate these criteria prior to claiming an exemption to one of the provisions?

21. Proposed § 1926.760(a)(2) provides criteria for fall arrest systems and other fall protection equipment and includes strength requirements for anchorages used in fall arrest systems. Proposed § 1926.757(a)(10) prohibits the use of joists and joist girders as anchorages and proposed § 1926.758(g) prohibits the use of purlins and girts in pre-engineered metal buildings as anchorages unless ''written direction to do so is obtained from a qualified person.'' In the discussion above, the explanation for the prohibition was explored but little was presented as to what the ''written direction'' should be based on. Should criteria be included in these provisions to develop the basis for the written direction and, if so, what should these criteria be?

22. OSHA welcomes small business comments in response to the following:

a. While conducting a negotiated rulemaking process, SENRAC considered a number of alternatives to the final proposal. The alternatives are presented in the preamble and the Initial Regulatory Flexibility Analysis. Are any of these alternatives more effective while achieving the same level of safety? Are there other cost-effective alternatives to specific provisions in the rule that would produce an equally safe steel erection workplace? If so, please explain.

b. Comments are welcome from affected small businesses on all aspects of the proposal. Comments could include anticipated costs (including capital outlay), revenue and profit estimates, feasibility and anticipated levels of safety resulting from the rule. In particular, OSHA welcomes comment and any available supporting information on the cost, feasibility and safety of the following specific requirements.

(1) Section 1926.754(e)(1)(i) requirement disallowing hoisting by bundle packaging and strapping, unless the packaging and strapping are designed for hoisting.

(2) Sections 1926.755(a)(1) and 1926.758(b) requirements to anchor all columns by a minimum of 4 anchor bolts, based on specific design assembly specifications.

(3) Section 1926.756(f)(3) requirement that holes or other devices be provided by the fabricator/supplier and be attached to perimeter columns at 42–45 inches above the finished floor.

(4) Section 1926.757(a)(4) requirement that a stabilizer plate be provided on each column for steel joists and steel joist girders.

(5) Section 1926.757(a)(8) requirement for steel joists in bays of 40 feet or more to be fabricated to allow for field bolting during erection—a requirement which requires the use of building specific bolt hole construction.

(6) Section 1926.757(d)(6)(iii) requirement for shop-installed bridging clips, or functional equivalents, on all steel joists to be provided where the bridging bolts to the steel joists.

(7) Section 1926.758(e)(2) requirement for the seat or similar connection device to be provided by the manufacturer of the girt or eave strut.

c. OSHA assumes that the proposed rule will require construction and steel fabricator firms to either pass-through costs and increase prices or assume costs in some proportion and reduce profits by some amount. Small business representatives have expressed concern that, if the total cost of construction increases by greater than 5 percent, their client base will shift away from steel erection to less costly construction methods. Is this an accurate threshold

for determining the effects of the rule on the competitive position of steel erection firms? Do affected firms expect the proposed rule to increase costs of steel erection or related fabrication by more than 5 percent? Explain the bases for this calculation. Will construction and fabrication firms lose significant numbers of jobs or specific types of jobs because of a price increase? Are specific types of firms within the steel erected building industry particularly sensitive to cost increases?

d. ''Leading edge'' construction firms have already met many of the proposed rule's provisions. Thus, OSHA assumes that other firms will be able to meet the rule's requirements with existing equipment and production methods at reasonable economic costs. Is this an accurate assumption? Firms already in basic compliance with the proposal's provisions are welcome to comment on each of the following questions:

(1) What is the size of your firm (e.g., number of employees, annual revenue, etc.)?

(2) Which provisions of the proposed rule do you practice?

(3) How much has compliance with these practices reduced or increased your profit and why?

(4) How much has compliance with these practices increased or reduced your costs and why?

(5) How much of increased costs have you been able to pass along to the customer?

(6) When faced with the need to make a cost-competitive bid, how does your firm absorb or reduce costs associated with the additional safety practices?

e. The proposed rule places new requirements on pre-engineered metal buildings. OSHA invites this industry sector to comment and provide supplemental information on the costs and benefits of these requirements. Specifically, the agency seeks comments on the following information:

(1) The number of firms likely to be affected by this rule;

(2) The typical size of these firms (e.g., number of employees, annual revenue, etc.);

(3) The size of revenues of these firms and their profitability as a percent of revenues;

(4) The costs of the proposed requirements on these firms;

(5) The need for safety improvements associated with erection of various sized pre-engineered metal buildings; and

(6) Regulatory alternatives that may be more appropriate or cost effective for this sector.

f. OSHA has assumed that safety benefits accrue to employees in small firms at a rate equal to that in medium and large firms. OSHA's Initial Regulatory Flexibility Analysis assumed, however, that 44 percent of iron workers affected by the rule are employed by small firms and that these small firms would have to pay only 22.5 percent of the costs, leaving the majority of the cost impacts to fall on medium and larger firms. OSHA welcomes comment on whether it should assume that benefits accrue on a different basis than costs. For example, OSHA welcomes comment on whether it has properly estimated that only 22.5 percent of costs would fall on firms with fewer than 10 employees, even though 44 percent of all employees in the steel erection trade work for these very small firms? Comments are also invited on other cost and benefit assumptions.

VII. Summary of the Preliminary Economic and Initial Regulatory Flexibility Analysis

Introduction

The Administrator of OIRA has determined that this proposal is a significant regulatory action under E.O. 12866 and a major rule under the Congressional Review provisions of the Small Business Regulatory Enforcement Fairness Act. Accordingly, OSHA has provided OIRA with an assessment of the costs, benefits and alternatives, as required by section 6(a)(3)(C) of E.O. 12866, which is summarized below.

Executive Order (EO) 12866 requires regulatory agencies to conduct an economic analysis for rules that meet certain criteria. The most frequently used criterion under EO 12866 is that the rule will impose annual costs on the economy of $100 million or more. OSHA's proposal to revise the steel erection standard in construction is projected to result in annual costs of less than $100 million; nevertheless, OSHA has prepared this preliminary economic analysis, summarized below.

The Regulatory Flexibility Act of 1980, as amended in 1996, requires OSHA to determine whether the Agency's regulatory actions will have a significant impact on a substantial number of small entities. Making such a determination for this proposal required OSHA to perform a screening analysis to identify any such impacts. OSHA's screening analysis indicated that the proposed rule might have significant impacts on a substantial number of small entities. Accordingly, OSHA has prepared an Initial Regulatory Flexibility Analysis, summarized below, of the proposed steel erection rule.

OSHA's preliminary economic analysis and initial regulatory flexibility analysis include a description of the industries potentially affected by the standard; a summary of the major changes between OSHA's existing steel erection standard and the proposed rule; an evaluation of the risks addressed; an assessment of the benefits attributable to the proposed standard; a determination of the technological feasibility of the new requirements; an estimate of the costs employers will incur to comply with the standard; a determination of the economic feasibility of compliance with the standard; and an analysis of the economic and other impacts associated with this rulemaking, including those on small businesses. OSHA's preliminary economic analysis and initial regulatory flexibility analysis of the proposed standard are based on risk and cost data collected and analyzed by OSHA's contractor, Jack Faucett Associates; these data are presented in Appendices B and C of the preliminary economic analysis.

Affected Industries

The proposed steel erection standard affects industries and establishments within the construction industry. Table 1 presents the industry groups in construction that will be directly affected by the proposed standard. Construction employers who will be directly impacted are concentrated within SIC 1791, Structural Steel Erection, an industry with 4,463 establishments and 51,108 employees in 1996, as reported by Dun & Bradstreet [D&B, 1996a]. Within this industry, 3,724 establishments, or 83 percent of the total number of establishments, employed nineteen or fewer employees in 1996, while 3,099 establishments (69 percent) employed nine or fewer employees. SIC 1791, however, also includes employers and workers who perform construction activities other than steel erection, notably pre-cast concrete erection. Thus, any comprehensive profile of the steel erection industry must, in addition to examining affected industry groups, focus on the type of work and the trade of the workers engaged in this form of construction.

BILLING CODE 4510–26–P

TABLE 1.—INDUSTRY GROUPS IN CONSTRUCTION POTENTIALLY AFFECTED BY THE PROPOSED STEEL ERECTION STANDARD

SIC	Industry group	Iron workers (a)	Establishments with 1–9 employees		Establishments with 1–19 employees		Establishments with 1–99 employees		Establishments with 100+ employees		All establishments	
			Establishments	Employment	Establishments	Employment	Establishments	Employment	Establishments	Employment	Establishments	Employment
15	Building Construction—General Contractors and Operative Builders.	13,760	250,639	736,753	267,669	948,795	278,225	1,310,692	3,306	185,116	281,531	1,495,808
154	General Building Contractors—Nonresidential Buildings.	13,760	35,373	130,773	42,934	225,849	49,297	452,453	1,706	148,947	51,003	601,400
1541	Industrial Buildings and Warehouses.	.....	6,055	22,269	7,422	39,733	8,884	93,823	559	60,411	9,443	154,234
1542	Nonresidential Buildings, other than in SIC 1541.	.....	29,318	108,504	35,512	186,116	40,413	358,630	1,147	88,536	41,560	447,166
16	Heavy Construction other than Building Construction.	2,490	30,861	107,284	36,389	177,080	42,484	406,738	3,663	240,183	46,147	646,921
161	Highway and Street Construction, except Elevated Highways.	220	11,465	40,482	13,476	65,703	15,767	153,454	906	109,699	16,673	263,153
162	Heavy Construction, except Highway and Street Construction.	2,270	19,396	66,802	22,913	111,377	26,717	253,284	2,757	130,484	29,474	383,768
1622	Bridge, Tunnel, and Elevated Highway Construction.	.....	634	2,477	844	5,116	1,199	18,847	281	15,674	1,480	34,521
1623	Water, Sewer, Pipeline, and Communications and Power Line Construction.	.....	6,673	26,154	8,669	51,686	10,874	133,018	1,989	43,469	12,863	176,487
1629	Heavy Construction Not Elsewhere Classified.	.....	12,089	38,171	13,400	54,575	14,644	101,419	487	71,341	15,131	172,760
17	Construction—Special Trade Contractors.	22,730	537,914	1,617,998	582,095	2,176,861	611,076	3,165,136	7,899	335,227	618,975	3,500,363
176	Roofing, Siding, and Sheet Metal Work.	1,060	37,688	116,697	41,185	160,798	43,671	244,033	451	13,315	44,122	257,348
179	Miscellaneous Special Trade Contractors.	20,210	104,192	312,739	112,313	414,931	117,545	589,432	1,340	58,755	118,885	648,187
1791	Structural Steel Erection	.....	3,099	10,986	3,724	18,914	4,346	40,696	117	10,412	4,463	51,108
Construction Totals.	.....	38,980	819,414	2,462,035	886,153	3,302,736	931,785	4,882,566	14,868	750,526	946,653	5,643,092

(a) U.S. Department of Labor, Bureau of Labor Statistics, Occupational Employment Statistics Survey, 1993.
Source: U.S. Department of Labor, OSHA, Office of Regulatory Analysis, 1998, based on Dun & Bradstreet, National Profile of Businesses software, Dun & Bradstreet Information Services, 1996.

BILLING CODE 4510–26–M

The workers directly benefitting from the proposed standard are identified in occupational surveys as structural metal workers; in the industry, they are known as iron workers. According to the Bureau of Labor Statistics' Occupational Employment Statistics Survey [BLS, 1993], there were 38,980 structural metal workers in construction in 1993, the majority of whom are found in SIC 179, Miscellaneous Special Trade Contractors (20,210 structural metal workers), and SIC 154, Contractors—Nonresidential Buildings (13,760 structural metal workers) (Table 1). For this preliminary economic analysis, OSHA used this estimate of the number of iron workers affected by the proposed rule in its benefits and cost analyses. In addition to these construction workers, structural metal workers and other workers in general industry who perform steel erection repair or renovation operations that are defined by OSHA as construction may fall within the scope of the proposed standard. At this time, however, OSHA lacks data on the number of, and types of work performed by, workers not classified in construction SICs that perform steel erection activities. OSHA requests information on the number of structural metal workers and workers in other trades who perform steel erection outside of the construction industry.

Proposed Changes to OSHA's Steel Erection Standard

The proposed steel erection standard modifies and strengthens the Agency's existing standard in a number of areas. For example, the proposed standard includes a scope and application section that identifies the types of construction projects and activities subject to the rule. Structures excluded from coverage under the scope of the standard are steel electrical transmission towers, steel communication and broadcast towers, steel water towers, steel light towers, steel tanks, and reinforced and pre-cast concrete. The proposed rule also includes a new section addressing site layout and construction sequence. Other proposed revisions to the existing standard include:

- Explicit requirements for hoisting and rigging and the resulting protection of workers and the public from the hazards of overhead loads;
- Additional and strengthened requirements for the structural steel assembly of beams, columns, joists, decking, and pre-engineered metal buildings, including the protection of employees from tripping hazards and slippery surfaces on walking/working surfaces;
- Strengthened and clarified requirements for fall protection for connectors, decking assemblers, and other iron workers during the erection of structural steel; and
- New requirements for training in fall hazards, multiple lift rigging,

connecting, and controlled decking zones.

For this analysis, OSHA has identified those requirements that would create substantial impacts or generate substantial benefits. OSHA estimates that current industry practice is at 10 percent with regard to providing fall arrest systems and personnel nets (i.e., 10 percent of affected firms currently use this equipment); at 75 percent for safety training; at 80 percent for column anchor bolts; and at 87 percent for guardrail systems [Ex. 11]. OSHA anticipates that the proposed standard's requirements pertaining to overhead loads, trips and slips, falls, falling objects, collapses, and worker training will both generate substantial benefits for affected employers and impose costs on them.

Evaluation of Risk and Potential Benefits

For this preliminary economic analysis, OSHA developed a profile of the risks facing iron workers who are performing steel erection operations. OSHA's risk profile for steel erection is based on data from the Bureau of Labor Statistics' National Census of Fatal Occupational Injuries, data from the Bureau's Survey of Occupational Injuries and Illnesses, and an analysis by a SENRAC workgroup of OSHA fatality/catastrophe inspection data obtained from the Agency's Integrated Management Information System.

OSHA anticipates that the proposed standard will significantly reduce the number of accidents and fatalities currently reported in the steel erection industry, particularly those accidents caused by falls from elevated levels and by objects such as dislodged structural members and building materials striking workers. OSHA believes that the proposed standard's more protective requirements for fall protection, structural stability, and training will help to save lives and prevent injuries in the iron worker workforce. For accidents involving events or exposures potentially addressed by the proposed standard, OSHA estimates that approximately 28 fatalities and 1,836 lost-workday injuries currently occur annually among structural metal workers (see Table 2, below); this is the current industry risk baseline used in this analysis. OSHA projects that full compliance with the proposed standard would prevent 26 of these fatalities and 1,152 of these lost-workday injuries. Twelve of these fatalities and 328 serious injuries could be prevented if employers were currently in compliance with OSHA's existing steel erection standard. The proposed standard will prevent an additional 14 fatalities and 824 injuries not prevented by the existing standard. Further, OSHA believes that compliance with the steel erection standard will be enhanced because the proposed revision is clearer, allows for more flexibility in compliance, is easier to understand, and is effectively targeted toward steel erection hazards.

BILLING CODE 4510–26–P

TABLE 2.—SUMMARY OF ESTIMATED NUMBER OF DEATHS AVERTED AND INJURIES AVOIDED BY FULL COMPLIANCE WITH THE PROPOSED STEEL ERECTION STANDARD

	Number of fatalities and lost-workday injuries currently occurring among iron workers	Number of fatalities and lost-workday injuries preventable by compliance with the existing standard	Additional number of fatalities and lost-workday injuries preventable by compliance with the proposed standard	Total number of fatalities and lost-workday injuries preventable by compliance with the existing and proposed standards	Number of fatalities and lost-workday injuries judged not to be preventable by either standard
Fatalities	28	12	14	26	2
Lost-Workday Injuries	1,836	328	824	1,152	684

Source: U.S. Department of Labor, OSHA, Office of Regulatory Analysis, 1998.

BILLING CODE 4510–26–M

In addition to saving lives and improving overall safety in the steel erection industry, OSHA believes that the proposed standard, once fully implemented by erection contractors, would yield substantial cost savings to parties within and connected with the industry and ultimately to society as a whole. These monetized benefits take the form of reductions in employer and insurer accident-related costs in several areas: value of lost output associated with temporary total disabilities and permanent partial disabilities, an income-based measure derived from estimates of workers' compensation indemnity payments; reductions in accident-related medical costs; administrative expenses incurred by workers' compensation insurers; and indirect costs related to productivity losses, work stoppages, and accident investigations and reports. Applying data from the construction and insurance industries on the direct costs of accidents and data from the literature on the indirect costs of accidents and other tort and administrative-related costs to OSHA's preliminary estimate of avoided injuries (see Chapter III in the preliminary economic analysis [Ex. 11]), the Agency monetized the value of the cost savings employers and society will accrue by avoiding these injuries. In sum, OSHA estimates that annual costs savings of $11.6 million would result from full compliance with the current rule and an additional $28.7 million would be saved as a result of compliance with the proposed rule (Table 3). Thus annual monetized benefits of $40.3 million are expected after the proposed steel erection standard is implemented as a final rule.

BILLING CODE 4510–26–P

TABLE 3.—SUMMARY OF ANNUAL INCREMENTAL MONETIZED BENEFITS OF PREVENTABLE LOST-WORKDAY INJURIES ATTRIBUTABLE TO THE PROPOSED STEEL ERECTION STANDARD

Lost Output Associated with Temporary Disabilities	$4,356,347
Lost Output Associated with Permanent Disabilities	14,450,838
Medical Costs	3,923,949
Insurance Costs (Administrative)	2,384,945

TABLE 3.—SUMMARY OF ANNUAL INCREMENTAL MONETIZED BENEFITS OF PREVENTABLE LOST-WORKDAY INJURIES ATTRIBUTABLE TO THE PROPOSED STEEL ERECTION STANDARD—Continued

Indirect Costs	3,607,994
Costs Associated with Liability Claims Avoided	N/Q
Total Cost Savings	28,724,074

N/Q—Not Quantified.

Source: U.S. Department of Labor, OSHA, Office of Regulatory Analysis, 1998.

BILLING CODE 4510–26–M

In addition to these monetized benefits, cost savings attributable to a decline in the number of third-party liability suits can be expected. Although quantification of these tort-related legal defense costs and dollar awards is difficult because of the unavailability of a sufficient volume of data, OSHA believes that these employer costs are substantial and would be slashed significantly through compliance with the proposed standard.

Technological Feasibility and Compliance Costs

Consistent with the legal framework established by the OSH Act, Executive Order 12866 and court decisions, OSHA has assessed the technological feasibility of the proposed steel erection standard. The proposed standard clarifies and strengthens the Agency's existing standard, provides more specific requirements in some areas, and introduces requirements for some steel erection hazards newly addressed by the Agency. Many of the proposed revisions are consistent with current construction means and methods used by leading firms within the steel erection industry. The success of these firms in this competitive industry demonstrates that the requirements of the proposed standard can be met with existing equipment and production methods.

Moreover, the proposed standard is based on a consensus draft recommended to the Agency by a negotiated rulemaking committee consisting of divergent industry interests—including small employers—who would be affected by any changes to subpart R. The committee reached consensus on the language of the draft, thereby implicitly acknowledging the feasibility of the proposed revisions to the standard.

Therefore, based on the fact that many firms in the industry are already implementing the controls and practices required by the proposed standard and that the negotiated rulemaking committee reached consensus on the draft underlying the proposed revisions, OSHA has preliminarily determined that the proposed steel erection standard is technologically feasible.

OSHA developed estimates of the costs of compliance for construction employers subject to the proposed standard; OSHA's analysis is based on data gathering and analysis carried out by Faucett Associates under contract to OSHA. OSHA estimated annualized compliance costs for two compliance scenarios: (1) costs to achieve compliance with OSHA's existing steel erection standard, and (2) costs to achieve compliance with the proposed standard. OSHA's cost estimates take into account the extent of current industry compliance, i.e., the extent to which employers are already in compliance with the requirements of OSHA's existing standard and with the requirements of the proposed steel erection standard. Accounting for these costs, i.e., subtracting them from the costs attributed to the proposed standard, is important because only those costs employers would actually incur to come into compliance with the proposed standard are properly attributed to that standard.

Table 4 presents OSHA's annualized compliance cost estimates, by provision or safety control, for establishments in the industries subject to the proposed standard. For establishments to achieve full compliance with OSHA's existing steel erection standard, annualized compliance costs are estimated to total $28.0 million. OSHA projects that full compliance with the proposed standard would, after deducting costs incurred to achieve compliance with the existing standard, result in net (or incremental) annualized costs of $49.4 million for affected establishments. Among incremental annualized costs, expenditures for fall arrest systems account for $14.4 million, or 29 percent of total costs; expenditures for the safe design and erection of steel joists required by the proposed standard account for $13.9 million, or 28 percent of total costs; and expenditures for anchor bolts necessary for structural stability account for $13.7 million, or 28 percent of total costs. Other control costs associated with compliance with the proposed steel erection standard are those for railings, cables, and barriers ($4.7 million); paperwork associated with administrative controls ($3.4 million); and training ($0.7 million).

BILLING CODE 4510–26–P

TABLE 4.—ANNUALIZED COMPLIANCE COST OF THE PROPOSED STANDARD BY INDUSTRY GROUP AND PROPOSED CONTROLS (a)

[1995 dollars]

SIC	Industry group and size	Fall arrest systems	Personnel nets	Proposed controls			Training	Paperwork	Total
				Railings, cables and barriers	Anchor bolts	Joist erection			
154	General Building Contractors—Nonresidential Buildings								
	Establishments with 1–9 Employees.	$1,005,697	($104,757)	$324,360	$958,333	$971,949	$50,944	$233,655	$3,440,181
	Establishments with 1–99 Employees.	3,664,730	(381,730)	1,181,959	3,492,139	3,541,752	185,637	851,432	12,535,919
	Establishments with 100+ Employees.	1,428,486	(148,796)	460,719	1,361,211	1,380,550	72,360	331,882	4,886,413
	All Establishments	5,093,216	(530,525)	1,642,679	4,853,350	4,922,302	257,997	1,183,315	17,422,332

TABLE 4.—ANNUALIZED COMPLIANCE COST OF THE PROPOSED STANDARD BY INDUSTRY GROUP AND PROPOSED CONTROLS (a)—Continued

[1995 dollars]

SIC	Industry group and size	Fall arrest systems	Personnel nets	Proposed controls			Training	Paperwork	Total
				Railings, cables and barriers	Anchor bolts	Joist erection			
161	Highway and Street Construction, except Elevated Highways								
	Establishments with 1–9 Employees.	18,716	(1,949)	6,036	17,834	18,088	948	4,348	64,020
	Establishments with 1–99 Employees.	57,156	(5,954)	18,434	54,464	55,238	2,895	13,279	195,514
	Establishments with 100+ Employees.	24,276	(2,529)	7,830	23,133	23,461	1,230	5,640	83,041
	All Establishments	81,432	(8,482)	26,264	77,597	78,700	4,125	18,919	278,555
162	Heavy Construction, except Highway and Street Construction								
	Establishments with 1–9 Employees.	134,569	(14,017)	43,402	128,232	130,054	6,817	31,265	460,320
	Establishments with 1–99 Employees.	524,969	(54,682)	169,314	500,245	507,352	26,592	121,967	1,795,757
	Establishments with 100+ Employees.	315,264	(32,839)	101,680	300,416	304,684	15,970	73,246	1,078,421
	All Establishments	840,233	(87,521)	270,994	800,662	812,037	42,562	195,213	2,874,178
176	Roofing, Siding and Sheet Metal Work								
	Establishments with 1–9 Employees.	150,303	(15,656)	48,476	143,224	145,259	7,614	34,920	514,141
	Establishments with 1–99 Employees.	361,729	(37,679)	116,666	344,693	349,590	18,323	84,041	1,237,363
	Establishments with 100+ Employees.	30,626	(3,190)	9,878	29,184	29,599	1,551	7,115	104,764
	All Establishments	392,355	(40,869)	126,544	373,877	379,189	19,875	91,157	1,342,127
1791	Structural Steel Erection								
	Establishments with 1–9 Employees.	1,821,328	(189,715)	587,420	1,735,552	1,760,209	92,259	423,152	6,230,206
	Establishments with 1–99 Employees.	5,131,108	(534,472)	1,654,900	4,889,457	4,958,922	259,916	1,192,118	17,551,950
	Establishments with 100+ Employees.	2,349,553	(244,737)	757,785	2,238,900	2,270,708	119,016	545,875	8,037,100
	All Establishments	7,480,661	(779,209)	2,412,685	7,128,357	7,229,630	378,933	1,737,994	25,589,050
All Significally Affected Industry Groups.	Establishments with 1–9 Employees.	3,130,613	(326,095)	1,009,694	2,983,176	3,025,558	158,581	727,340	10,708,868
	Establishments with 1–99 Employees.	9,739,692	(1,014,517)	3,141,274	9,280,999	9,412,855	493,364	2,262,838	33,316,503
	Establishments with 100+ Employees.	4,148,205	(432,090)	1,337,891	3,952,844	4,009,003	210,127	963,759	14,189,738
	All Establishments	13,887,897	(1,446,607)	4,479,165	13,233,843	13,421,857	703,491	3,226,597	47,506,242
Other Affected Industry Groups (b).		540,414	(56,291)	74,296	514,963	522,279	27,375	125,555	1,848,590
Total		14,428,311	(1,502,898)	4,653,461	13,748,806	13,944,136	730,865	3,352,152	49,354,832

Note: Figures in the table may not sum to totals due to rounding.

(a) Total compliance costs were distributed among industry groups according to the percentage of iron workers employed in that group (see Table 1). Within SIC groups, costs were distributed by share of revenue for firms in the size class.

(b) Other industries potentially affected by the proposed steel erection standard employ a small percentage of iron workers. These industry groups are: SIC 171, Plumbing, Heating and Air-Conditioninng;: SIC 173, Electrical Work; SIC 174, Masonry, Stone Work, Title Setting and Plastering; and SIC 175, Carpentry and Floor Work. Because firms in these industries are seldom involved directly in structural steel erection. OSHA has grouped them separately.

Source: U.S. Department of Labor, OSHA, Office of Regulatory Analysis, 1998, based on cost analysis by Jack Faucett Associates (See Appendix C of the preliminary economic analysis [Ex. 11]) and Dun & Bradstreet, National Profile of Businesses software, Dun & Bradstreet Information Services, 1996.

Economic Impacts

OSHA analyzed the impacts of these compliance costs on prices, profits, construction output and other economic indices in the steel erection industry. In particular, OSHA examined economic impacts on SIC 1791, Structural Steel Erection, where the majority of the 39,000 structural metal workers are employed. This analysis shows that structural steel erectors will not be severely impacted by the costs associated with full implementation of the proposed standard.

OSHA examined the potential economic impacts of the proposed standard by making two assumptions used by economists to bound the range of possible impacts: the assumption of no-cost pass-through, i.e., that employers will be unable to pass any of the costs of compliance forward to their customers, and the assumption of full-cost pass-through, i.e., that employers will be able to pass all of the costs of compliance forward to their customers. As summarized in Table 5, below, OSHA estimates that, if affected firms in SIC 1791 were forced to absorb these compliance costs entirely from profits (a highly unlikely scenario), profits would be reduced by an average of 4.6 percent. If, at the other extreme, affected firms were able to pass all of these compliance costs forward to general contractors and project owners, OSHA projects that the price (revenue) increase

required to pay for these costs would be less than 1 percent (0.28 percent).

In addition to examining the economic effects of the proposed standard on firms in SIC 1791, OSHA estimated the impacts of the proposed standard on two other construction industry divisions involving steel erection: (1) the entire construction sector; and (2) construction activity where structural steel constitutes the physical core of the project, termed ''steel-frame construction'' by OSHA.

For the dollar value of business for the entire construction sector, OSHA totaled 1996 sales data for SICs 15, 16, and 17 provided in a Dun & Bradstreet national business database [D&B, 1996a]. OSHA derived pre-tax income (Column 2 in Table 5) for the construction sector by, first, calculating industry profit using Dun & Bradstreet data on post-tax return on sales (post-tax profits) and, second, applying a formula that converts post-tax income to pre-tax income based on tax rates in the U.S. corporate tax code. OSHA found that, for the construction sector as a whole, price impacts under full cost pass-through would be 0.01 percent, and profit impacts assuming no cost pass-through would be 0.06 percent. Thus in the context of the construction sector as a whole, the proposed standard would have little impact.

BILLING CODE 4510–26–P

TABLE 5.—POTENTIAL ECONOMIC IMPACTS OF THE PROPOSED STEEL ERECTION STANDARD ON SELECTED SECTORS WITHIN THE CONSTRUCTION INDUSTRY

[Worst-Case Conditions]

	Dollar value of business (a) ($ millions)	Pre-tax income (b) ($ million)	Compliance costs as a percent of revenue (c)	Compliance costs as a percent of profit (c)
Construction Sector as a Whole	$768,155.9	$77,830.1	0.01	0.06
Steel-Frame Construction (d)	119,979.2	12,156.4	0.04	0.41
SIC 1791, Structural Steel Erection	9,285.7	562.4	0.28	4.55

(a) Based on data from Dun & Bradstreet, National Profile of Businesses, 1996.

(b) Based on data from Dun & Bradstreet, National Profile of Businesses, 1996; Dun & Bradstreet, Industry Norms and Key Business Ratios, 1996; and OSHA profit calculations.

(c) Revenue and profit impacts were calculated by dividing annual compliance costs for each of the three construction sectors shown in the table by, respectively, dollar value of business and pre-tax income. Compliance costs assigned to these sectors are based on total costs of $49.4 million and were applied as follows: construction sector as a whole—$49.4 million; steel-frame construction—$49.4 million; and SIC 1791, Structural Steel Erection—$25.6 million.

(d) Steel-Frame Construction is defined by OSHA as the body of construction projects where steel framing constitutes the physical core of the structure. Dollar value of business and pre-tax income for Steel-Frame Construction were computed by applying the percentage of the value of the steel market share (15.6 percent), excluding that for tanks and towers, of all construction starts to the dollar value of business and pre-tax income for the entire construction sector. Data on the steel market share for 1995 are based on memoranda to OSHA from Construction Resources Analysis, College of Business Administration, University of Tennessee, Knoxville [Exs. 9–143 and 9–144].

Source: U.S. Department of Labor, OSHA, Office of Regulatory Analysis, 1998.

BILLING CODE 4510–26–M

OSHA calculated the value of steel-frame construction using data provided by the Construction Resources Analysis office of the University of Tennessee, College of Business Administration on the value of the steel market share of the entire construction industry. In this calculation, OSHA applied the percentage of the value of the steel market share (15.6 percent), excluding that for tanks and towers, of all construction starts to the dollar value of business and pre-tax income for the entire construction sector, thereby eliminating all non-steel construction (as defined in the proposed standard) from the earnings total. Price increases for steel frame construction as a whole are of particular interest because they represent the price increases to the ultimate customers of steel erection services, the purchasers of buildings, bridges, etc. Under the worst-case price increase scenarios, the price of such projects would increase by 0.04 percent. It is exceedingly unlikely that a customer would fail to go ahead with a project as a result of a price increase of this magnitude; as a result cost pass-through at the project level is probably feasible.

OSHA believes that, prior to the generation of the cost savings projected to accrue from implementation of the standard, most steel erectors will handle the increase in direct costs by increasing their prices somewhat and absorbing the remainder from profits. Within steel erection markets, the particular blend of impacts experienced by a given firm will depend on the degree of competition with concrete erection and other alternative types of construction in the firm's local market area. Although these minimal economic impacts would be felt by most affected employers after implementation of the standard, OSHA anticipates—based on testimony by members of SENRAC and other industry representatives whose current fall protection programs and other safety measures mirror those required by the proposed standard [Exs. 6–3, 6–8, and 6–10]—that offsetting cost savings will soon reverse any negative economic impacts.

Regulatory Flexibility Screening Analysis

The Regulatory Flexibility Act of 1980 (RFA), as amended in 1996 (5 U.S.C. 601 *et seq.*), requires regulatory agencies to determine whether regulatory actions will adversely affect small entities. The significance of any economic impact is measured by the effect on profits, market share, and an entity's financial viability. Pursuant to the RFA, OSHA has assessed the small-business impacts of the proposed steel erection standard. On the basis of this regulatory flexibility screening assessment and the underlying data, summarized below, OSHA has preliminarily determined that the proposed standard will have a significant impact on a substantial number of small entities. Thus, OSHA has conducted a full Initial Regulatory Flexibility Analysis, as required. OSHA's Initial Regulatory Flexibility Analysis follows the screening analysis presented in this section.

The Small Business Administration (SBA) defines small entities, or ''concerns,'' in terms of number of employees or annual receipts. For employers in SIC 17, small concerns are

defined by SBA as those with $7.0 million or less in annual receipts. OSHA has determined that in SIC 1791, Structural Steel Erection, based on 1996 data from Dun & Bradstreet (D&B) and using D&B's estimate of the dollar value of business to represent annual receipts, the class of establishments with 99 or fewer employees comes closest to the class of firms qualifying as small concerns under the SBA definition. Not all firms in this class would have annual receipts of less than $7.0 million; however, OSHA would rather overestimate the number of small firms than try to extrapolate the number of small firms from the limited data available. Establishments with fewer than 99 employees represent 97.4 percent of the 4,463 establishments and employ 79.6 percent of the 51,108 workers in SIC 1791, according to Dun & Bradstreet's national market profile [D&B, 1996a].

OSHA projects that the magnitude of compliance costs for most safety measures mandated by the proposed standard will depend on the size of an employer's workforce. For requirements pertaining to fall protection, joist erection, and structural assembly, to name a few provisions, labor and equipment costs will vary by project size and duration. For the requirements for training, costs will vary by employment size. Thus, in some cases, smaller firms erecting smaller structures will incur relatively lower compliance costs. In sum, the proposed standard is designed to minimize requirements that would impose significant fixed capital costs and give larger firms a competitive advantage through economies of scale.

In this regulatory flexibility screening assessment, OSHA assessed the impacts of compliance costs within the industry group with the largest concentration of affected employers and employees, SIC 1791, Structural Steel Erection. According to data from the Bureau of Labor Statistics, of the approximately 39,000 iron workers in construction, 20,210 are employed in SIC 179, Miscellaneous Special Trade Contractors. OSHA believes that the great majority of these workers are found in SIC 1791, Structural Steel Erection, because the other industries in SIC 179 (glass and glazing, excavation work, wrecking and demolition, installation and erection of building equipment (such as installing elevators, revolving doors and industrial machinery) and specialty trade contractors not elsewhere classified), are unlikely to employ significant numbers of iron workers. This contention is supported by the fact that available data on iron worker deaths (see Table III–2 in the preliminary economic analysis [Ex. 11]) show that SIC 1791 accounted for more than 90 percent of iron worker deaths in SIC 179 in 1992–93. Total employment for all trades in SIC 1791 is 51,108 workers, according to Dun & Bradstreet. BLS and D&B data indicate that iron workers constitute roughly 40 percent of the labor force in SIC 1791, the largest concentration of iron workers in any four-digit group where iron workers are employed. In addition, only firms in SIC 1791 earn the majority of their revenues from steel erection. (According to the definitions used in the SIC system, firms classified in all other sectors must earn a minority of their total revenues from their steel erection business.)

Compared with all other industry groups in the construction industry, firms in SIC 1791 have the greatest number of iron workers per firm and the highest percentage of iron workers relative to total employment. Since the costs of compliance are approximately proportional to the number of iron workers in a given firm, establishments in SIC 1791 will experience the greatest economic impact.

To assess the financial impacts of the proposed standard on small firms in SIC 1791, OSHA distributed compliance costs within size classes according to an estimate of the percent of revenue (gross sales) earned by establishments within those size classes. Applying Dun & Bradstreet revenue figures, OSHA has determined that costs represent less than one percent (0.28 percent) of revenues for firms with 99 or fewer employees, so that under the extreme case of full-cost pass-through to consumers, prices would rise by no more than one percent (see Table 6, below). Similarly, for the very smallest firms, those with fewer than ten employees, price impacts are projected to be low: 0.28 percent.

BILLING CODE 4510–26–P

TABLE 6.—POTENTIAL ECONOMIC IMPACTS OF THE PROPOSED STEEL ERECTION STANDARD ON SMALL FIRMS IN THE STEEL ERECTION INDUSTRY UNDER WORST-CASE CONDITIONS

	Annual compliance costs (a) ($ millions)	Compliance cost per establishment (a)	Dollar value of business (b) ($ millions)	Revenue per establishment (b)	Pre-tax income (c) ($ millions)	Pre-tax income per establishment (c)	Compliance costs as a percent of revenue	Compliance costs as a percent of profit
SIC 1791, Structural Steel Erection	$25.6	$5,733.6	$9,285.7	$2,080,606.0	$562.4	$126,024.2	0.28	4.55
SIC 1791, 1–99 Employees	17.6	4,038.6	6,369.2	1,465,541.8	395.8	91,074.8	0.28	4.43
SIC 1791, 1–9 Employees	6.2	2,010.4	2,260.8	729,530.4	95.8	30,898.0	0.28	6.51

(a) Based on Table 5 of this summary of the preliminary economic analysis and data on number of establishments from Dun & Bradstreet, National Profile of Businesses, 1996. Compliance costs for size groups were derived by applying the percentage of revenue in the size groups to total costs for all of SIC 1791.

(b) Based on data from Dun & Bradstreet, National Profile of Businesses, 1996.

(c) Based on data from Dun & Bradstreet, National Profile of Businesses, 1996; Dun & Bradstreet, Industry Norms and Key Business Ratios, 1995–96; and OSHA profit calculations.

Source: U.S. Department of Labor, OSHA, Office of Regulatory Analysis, 1998.

BILLING CODE 4510–26–M

Under the alternate scenario of full-cost profit absorption (an extremely unlikely scenario) among steel erection contractors with 99 or fewer employees, profit impacts would be 4.4 percent; for firms with one to nine employees, profit impacts would be 6.5 percent. Thus, costs as a percentage of profits and revenues for SIC 1791 are lower when a small entity is defined to include all firms within the SBA size standards (less than $7 million in revenue) than for small entities employing fewer than 10 workers. The difference in these projected profit impacts for the two smaller size categories of firms reflects a difference in the 1995–96 profit rates

for the two groups [D&B, 1996b] applied by OSHA in this impacts analysis: (1) an average 3.6 percent rate of net-profit-after-tax-to-net-sales for establishments with fewer than ten employees (roughly defined as those with assets of less than $250,000) and (2) an average 4.9 percent post-tax profit/sales ratio for establishments with one to ninety-nine employees (roughly defined as those with assets of $250,000 to $1 million) (see Chapter VI in the preliminary economic analysis for further explanation).

OSHA believes that most small erectors will, along with the rest of the industry, receive economic benefits from compliance with the proposed rule that will more than offset these direct cost impacts. As noted above, employer representatives on the committee commented on numerous occasions that the measures required by the proposed standard will, in fact, improve profitability and competitiveness [Exs. 6–3, 6–8, and 6–10]. Therefore, OSHA anticipates that most small entities will experience minimal economic impacts as a result of implementation of the proposed standard if some or all compliance costs can be passed forward to final consumers and/or cost savings are realized. However, OSHA believes that, when compliance costs exceed 5 percent of profits in an industry earning reasonable profits, the standard's impact may be significant in the context of the Regulatory Flexibility Act. Thus, OSHA has conducted a full Initial Regulatory Flexibility Analysis, as required by that act.

Regulatory Flexibility Analysis

The Regulatory Flexibility Act, as amended in 1996, requires that an Initial Regulatory Flexibility Analysis contain the following elements:

(1) A description of the reasons why action by the agency is being considered;

(2) A succinct statement of the objectives of, and legal basis for, the proposed rule;

(3) A description of and, where feasible, an estimate of the number of small entities to which the proposed rule will apply;

(4) A description of the projected reporting, recordkeeping and other compliance requirements of the proposed rule, including an estimate of the classes of small entities that will be subject to the requirement and the type of professional skills necessary for preparation of the report or record;

(5) An identification, to the extent practicable, of all relevant Federal rules that may duplicate, overlap or conflict with the proposed rule; and

(6) A description of any significant alternatives to the proposed rule that accomplish the stated objectives of applicable statutes and minimize any significant economic impact of the proposed rule on small entities.

In addition, a Regulatory Flexibility Analysis must contain a description of any significant alternatives to the proposed rule that, first, accomplish the stated objectives of applicable statutes (in this case the OSH Act and the Regulatory Flexibility Act) and that, second, minimize any significant economic impact of the proposed rule on small entities.

Reasons for the Proposed Rule

According to OSHA's analysis of accident data for an eleven-year period (1984–1994), 319 iron worker fatalities involved hazardous conditions that are addressed by OSHA's current and proposed steel erection standards. Based on a review of BLS injury census data for the period 1992–1993, OSHA estimates that an average of 28 fatalities and 1,836 lost-workday injuries annually involve circumstances that would be addressed by provisions in the proposed OSHA steel erection standard. For an industry with an estimated workforce of only 38,980 workers, these fatality and injury levels clearly demonstrate that the risk confronting these workers is significant. Therefore, OSHA has developed proposed regulatory text that is designed to address this risk.

Objectives of the Proposed Rule

The objective of this proposal is to reduce the risk of occupational exposure to a variety of hazards on steel erection construction worksites, such as those involving falls, slips, trips, being struck by or crushed by objects or loads, and structural collapses. These occupational hazards will be reduced by this proposal through the use of engineering controls, work practice controls, inspections of worksite conditions, training, communication, and recordkeeping. Implementation of these measures has been shown to minimize or eliminate occupational exposure to these hazards during the erection of steel structures and thus to reduce the risk of injury or death among iron workers.

Description of the Number of Small Entities

For this rulemaking, OSHA has identified the population at risk of injury in the construction workforce and the industry groups where steel erection is conducted, but cannot give a precise estimate of the number of small entities to which the proposed rule will apply. In SIC 1791, Structural Steel Erection, where the majority of iron workers are employed, there are roughly 4,346 establishments defined as small by the SBA, i.e., these entities earn less than $7 million in annual revenue. If all establishments in SIC 1791 were affected by the proposed standard, then small entities would comprise 97 percent of all affected entities using the SBA size standard. There are 3,724 very small establishments, i.e., those employing fewer than 20 employees, in SIC 1791; these very small establishments comprise 83 percent of all establishments in the industry.

OSHA also examined the impact of the proposed standard on the Fabricated Structural Metal Industry (SIC 3441), which produces iron and steel for structural purposes such as the construction of bridges and buildings. This sector would need to bore holes in certain joists—those that are connected to steel structures in bays spanning 40 feet or more—to enable them to be bolted rather than welded (proposed section 1926.757). OSHA's impact analysis assumes that this sector would bear all of the $13.9 million in annual costs associated with the provision of the proposed standard concerning open web joists. In fact, because of contractual arrangements among fabricators, steel erectors and building owners, most of the costs of this provision would be transmitted through steel erectors to building owners and would appear in the bid price of the project or would be incurred as onsite costs.

For purposes of this analysis, OSHA has defined small firms in this industry using the SBA definition of small firms: firms with fewer than 500 employees. Department of Commerce data show that there were 2,356 small firms in this sector in 1993. (Small firms represented 97.5 percent of all firms.) Department of Commerce data also show that these small firms had total revenues of over $6.6 billion, almost 73 percent of all industry revenues. Dun and Bradstreet data show that in fiscal year 1995, the median profits for firms in this sector were a healthy 3.5 percent of sales. Small firms were assumed to bear costs in proportion to their revenues. Even if all of the costs of this provision of the standard are borne by the fabricated structural metal industry, these costs represent only 0.15 percent of revenues and 4.3 percent of profits for small firms in this sector. Thus the costs of the standard would not cause a significant impact on small firms in this sector.

The Steel Joist Institute has argued that some small firms may lack the equipment to prepare joists as required

by the standard, and that as a result such firms could be severely impacted. However, buildings requiring joists in bays spanning 40 feet or more represent only a portion of the total market. To the extent that there are small firms lacking suitable equipment, such firms could still produce fabricated steel for a variety of steel erection projects and for portions of other projects. As a result, OSHA does not anticipate a significant impact, if any, on those firms that lack the proper equipment to prepare certain joists for bolting. However, OSHA solicits comment on two issues: (1) whether there are small firms lacking suitable equipment to prepare joists in the manner prescribed by the regulation; and (2) the percentage of the steel framing market that requires the use of joists in bays spanning 40 feet or more.

Description of the Proposed Reporting, Recordkeeping and Other Compliance Requirements

The proposed rule would require, in the following sections of the proposal, that employers establish and maintain records for the use of engineering controls, work practices, inspections, and training:

- Site layout, site-specific erection plan, and construction sequence;
- Hoisting and rigging;
- Structural steel assembly;
- Open web steel joists;
- Pre-engineered metal buildings; and
- Training

Most steel erection employers would be affected by the reporting and recordkeeping requirements in these sections, with the exception of the requirements pertaining only to pre-engineered buildings. Of an estimated 17,587 steel erection projects constructed annually, 7,391 pre-engineered metal buildings are erected each year.

In estimating the cost of establishing and maintaining the records for each of these control areas, OSHA used the wage rate of the applicable professional personnel. To give two examples: (1) for the cost of certifying crane visual inspections, OSHA applied the wage rate for a crane operator; and (2) for the costs of documentation of alternative methods for joist erection, OSHA applied the wage rates of a project manager and a structural engineer. All recordkeeping requirements included in the proposed rule could be performed by the existing staff in any of the covered industries. A detailed description of the proposed requirements appears in Chapter II, INDUSTRY PROFILE and Chapter III, COSTS OF COMPLIANCE, in the preliminary economic analysis.

Relevant Federal Rules

OSHA is proposing to revise the current safety standard for steel erection that has been in place with little change for over 25 years. OSHA believes that this thorough and comprehensive revision to existing subpart R will provide greater protection and eliminate ambiguity and confusion, thereby improving safety in this important segment of the construction industry.

At present there are no other federal workplace rules or guidelines that overlap with the OSHA steel erection standard.

Significant Alternatives Considered

OSHA is confident that the proposed steel erection standard has been written in such a way as to minimize impacts on small employers while still ensuring significant protection for affected employees. Through the efforts of key stakeholders participating in the negotiated rulemaking, the proposed standard features, wherever possible, performance language that permits maximum flexibility for achieving safety outcomes. For example, the proposal provides an opportunity to those employers, who select alternative means and methods for complying with certain sections of the standard, to incorporate these alternatives into a site-specific erection plan. The committee considered small contractors when it elected not to recommend that OSHA propose a universal requirement for a site-specific erection plan for all steel erection sites. Instead, the proposal provides guidelines for establishing a site-specific erection plan in a non-mandatory appendix to assist employers who choose to develop such a plan, as recommended by the committee.

Other areas of the proposed standard that are particularly responsive to the concerns of small contractors include rules for the safe use of cranes and other lifting equipment and the proper assembly of metal buildings other than those constructed of heavy structural steel. In light of the number of small steel erectors potentially affected by the hoisting and rigging section of the proposed standard, OSHA has attempted to minimize the burden of the pre-shift visual crane inspections by having the inspection checklist apply only to the most essential safety elements, as recommended by SENRAC. Additionally, since there are a large number of small builders who erect pre-engineered metal structures exclusively, OSHA determined that a separate section in the proposal dedicated to this type of steel erection would ease compliance for small erectors.

The Regulatory Flexibility Act emphasizes the importance of performance-based standards for small businesses. OSHA considers the proposed standard to be highly performance oriented and believes that smaller contractors will benefit especially from that orientation. For example, in proposed § 1926.760, Fall Protection, employers are required to protect certain employees exposed to fall distances of 15 feet or greater. Paragraph (a)(2) of § 1926.760 lists the types of general safety systems—e.g., guardrail systems, safety net systems, or personal fall arrest systems—that must be used by employers to provide fall protection to their employees. However, the proposed standard does not mandate particular engineering solutions by structure type, site location, crew size, or other criteria. Employers are free to select any one system or combination of systems that is most compatible with company practice and employee protection so long as the performance measure—fall protection at 15 feet—is achieved. OSHA welcomes comment on other ways that the standard can be made more performance oriented.

As another example of OSHA's sensitivity to the potential impacts on small businesses, the proposal minimizes paperwork burden where training, notifications, and other forms of communication are required, as recommended by SENRAC. Regarding training provisions, general instruction in fall hazards is mandated for all employees exposed to that risk, but the scope of additional special training is limited to three particularly hazardous activities: multiple lift rigging, connecting, and decking. Employers are to ensure that the training is provided but do not have to document or certify the program. Other requirements where communication will be necessary, including those involving field curing of concrete footings and modification of anchor bolts, were written in such a way as to limit the notifications to cover only the most essential information. Supplementary explanatory materials, presented in appendices to the proposed standard, are intended to assist employers in complying with the rule and otherwise providing a safer workplace.

Another approach recommended by the Regulatory Flexibility Act is compliance date phase-ins for small businesses. Throughout their deliberations, SENRAC recognized the importance of effective outreach to the steel erection community prior to and following promulgation of the proposed standard. In fact, as stated recently by a committee member, many employers in

the industry are aware of, and have already begun to align their safety programs with, the proposed revisions to subpart R (Ex. 9–156). At present, the proposed standard contains no dates for implementation. Barring evidence in the record that would compel the Agency to delay the compliance dates, OSHA anticipates that the final standard will become effective for all employers within a few months after it is published. At this time, OSHA believes that any compliance extensions for affected employers, including small employers, would only marginally ease the economic burden, given the progress in occupational safety already underway throughout industry and the non-capital-intensive nature of the rule, and would delay unnecessarily the protection of workers who would otherwise benefit from compliance with the proposed rule. OSHA welcomes comment on the appropriateness of compliance phase-in dates for the proposed standard.

In sum, throughout the pre-proposal process of negotiated rulemaking for OSHA's steel erection standard, the needs and concerns of small employers have been considered and addressed on a regular basis. After considering a number of alternatives as candidates for the requirements in the proposed rule and adopting those that were consistent with the mandate imposed by the OSH Act, OSHA has developed a proposed rule that will minimize the burden on small employers, while maintaining the necessary level of worker protection.

Non-Regulatory Alternatives

The primary objective of this proposed standard is to minimize the number of construction worker injuries and fatalities. To develop this proposed steel erection standard, OSHA employed negotiated rulemaking using an advisory committee composed of representatives from the construction industry (both labor and management and both small and larger firms), the insurance industry, the engineering field, and Federal and State government regulatory and research agencies. OSHA examined a number of non-regulatory approaches to enhancing workplace safety, including the operation of the classical free market, the tort liability insurance system and the workers' compensation insurance system.

OSHA believes that these social and economic alternatives to a Federal workplace regulation fail to adequately protect workers from the hazards associated with structural steel erection in the construction industry. The private market offers economic signals that could have the potential to direct workers toward desirable combinations of risk and reward, but market imperfections and institutional rigidities prevent workplaces from achieving the most optimal safety outcomes, creating inefficient, inadequately compensated risks for workers. Tort liability laws and workers' compensation provide some protection, but fall far short of fully compensating injured employees for the loss of wages, the medical costs, and the legal and other costs resulting from workplace accidents. Furthermore, these approaches are inherently reactive, rather than proactive, and largely fail to introduce progressive safety programs at all levels of industry. Therefore, OSHA believes that this proposed revision to the steel erection standard provides the necessary remedy.

VIII. Environmental Assessment

The proposed standard has been reviewed in accordance with the requirements of the National Environmental Policy Act (NEPA) of 1969 (42 U.S.C. 4321 *et seq.*), the regulations of the Council on Environmental Quality (CEQ) (40 CFR Part 1500), and DOL NEPA Procedures (29 CFR Part 11). The provisions of the standard focus on the reduction and avoidance of accidents occurring during structural steel erection. Consequently, no major negative impact is foreseen on air, water or soil quality, plant or animal life, the use of land or other aspects of the environment.

IX. Federalism

This proposed Rule has been reviewed in accordance with Executive Order 12612 (52 FR 41685, October 30, 1987) regarding Federalism. The Order requires that agencies, to the extent possible, refrain from limiting state policy options, consult with States prior to taking any actions that would restrict State policy options, and take such actions only when there is clear constitutional authority and the presence of a problem of national scope. The Order provides for preemption of State law only if there is a clear Congressional intent for the agency to do so. Any such preemption is to be limited to the extent possible.

Section 18 of the Act, expresses Congress' clear intent to preempt state laws relating to issues on which Federal OSHA has promulgated occupational safety and health standards. Under the OSH Act, a State can avoid preemption only if it submits, and obtains Federal approval of, a plan for the development of such standards and their enforcement. Occupational safety and health standards developed by such State Plan States must, among other things, be at least as effective in providing safe and healthful employment and places of employment as the Federal standards. Where such standards are applicable to products distributed or used in interstate commerce, they may not unduly burden commerce or must be justified by compelling local conditions (see Sect. 18(c)(2)).

The Federal standard on steel erection addresses hazards which are not unique to any one state or region of the country. Nonetheless, states with occupational safety and health plans approved under Section 18 of the OSH Act can develop their own State standards to deal with any special problems which might be encountered in a particular state. Moreover, because this standard is written in general, performance-oriented terms, there is considerable flexibility for State plans to require, and for employers to use, methods of compliance which are appropriate to the working conditions covered by the standard.

In brief, this proposed rule addresses a clear national problem related to occupational safety and health hazards of steel erection in the construction industry. Those States which have elected to participate under Section 18 of the OSH Act will not be preempted by this standard and will be able to address any special conditions within the framework of the Federal Act while ensuring that the State standards are at least as effective as that standard. State comments are invited on this proposal and will be fully considered prior to promulgation of a final rule.

X. Unfunded Mandates

For the purposes of the Unfunded Mandates Reform Act of 1995, as well as Executive Order 12875, this rule does not include any Federal mandate that may result in increased expenditures by State, local, and tribal governments, or increased expenditures by the private sector of more than $100 million in any year.

XI. OMB Review Under the Paperwork Reduction Act

This proposed rule contains collections of information as defined in OMB's regulations at 60 FR 44978 (August 29, 1995) in § 1926.752(a)(1), § 1926.752(a)(2), § 1926.753(a)(1)(iv), § 1926.753(a)(5), § 1926.753(c)(2), § 1926.754(c)(3), § 1926.757(a)(3), § 1926.757(a)(11), § 1926.757(e)(4)(i), § 1926.758(g), and § 1926.761.

The paperwork estimates contained in this section are based on OSHA's preliminary economic analysis (PEA). A more detailed discussion of project and

time estimates can be found in Chapter V, Costs of Compliance, of OSHA's PEA (Ex. 11).

Under the Paperwork Reduction Act of 1995, agencies are required to seek OMB approval for all collections of information. As a part of the approval process, agencies are required to solicit comment from affected parties with regard to the collection of information, including the financial and time burdens estimated by the agencies for the collection of information. OSHA believes it is necessary for employers to prepare certifications and or obtain required information for the above-mentioned requirements.

Proposed § 1926.752(a)(1) requires that the controlling contractor provide the steel erector with written notification that the concrete in the footings, piers and walls or the mortar in the masonry piers and walls has attained, on the basis of an appropriate ASTM standard test method of field cured samples, either 75 percent of the intended minimum compressive design strength or sufficient strength to support loads imposed during steel erection. OSHA believes it is necessary for employers to provide the written verification that the concrete in footings, piers and walls or the mortar in masonry piers has cured properly prior to beginning steel erection activities. To comply with this requirement, the controlling contractor must provide the steel erector with documentation to this effect. Since the concrete supports the steel structure, the steel erector must be assured that the concrete is adequate to support the structure to prevent the possibility of collapse from erecting steel on improperly cured concrete. OSHA estimates that 12,311 projects will require these tests to be performed. The number of tests will vary depending on the size of the project. The average is estimated to be three tests per project, and the time for the notification to be transferred is estimated at five minutes. The tests are already required to be performed in accordance with the American Concrete Institute (ACI) building code and OSHA's Concrete standard (subpart Q), and it is usual and customary that the testing facility provide a written certification to the controlling contractor. Therefore, the only burden taken is the transfer of the information from the controlling contractor to the steel erector. The total estimated annual respondent burden for steel erection worksites is $92,716 and 3,078 burden hours.

Proposed § 1926.752(a)(2) requires that the controlling contractor provide the steel erector with written notification that any repairs, replacements and modifications to anchor bolts have been conducted in accordance with § 1926.755(b). As explained in the discussion for this proposed paragraph, without notification from the controlling contractor, the steel erector may not know that an anchor bolt has been damaged and subsequently repaired. Improper repair has in the past caused columns to collapse. This notification is intended to prevent those collapses. OSHA estimates that 5,862 projects have anchor bolts that need repair. Approximately half of those projects are not currently getting the approval of the structural engineer of record. For the projects that are already getting the engineer's approval, it is estimated that it will take the engineer five minutes to transfer a piece of paper to the controlling contractor. For the projects that are not currently obtaining engineer approval, it is estimated that the approval time for repairs to anchor bolts will take an average of three hours for the whole process. The total estimated annual respondent burden for steel erection worksites is $459,891 and 9,458 burden hours.

Proposed § 1926.753(a)(1)(iv) requires that the employer obtain and/or prepare a certification record of the pre-shift inspection required by paragraph § 1926.753(a)(1)(i), which includes the date the crane items were inspected; the signature of the person who inspected the crane items; and a serial number, or other identifier, for the crane inspected. OSHA believes it is necessary for the employer to obtain and/or prepare the certification record required to verify that each crane operator has inspected the crane and determined that it is in the proper working condition to perform his/her duties safely. This requirement can be complied with by the simple use of a crane operator's log book. OSHA estimates that 17,586 projects will require the use of a crane (the number of projects differs from the total number of steel erection projects due to rounding calculations; see Ex. 11). Each inspection is estimated to take ten minutes. The length of each project varies and one shift is estimated per day. The total estimated annual respondent burden for steel erection worksites is $2,336,390 and 56,848 burden hours.

Proposed § 1926.753(a)(5) prohibits safety latches on hooks from being deactivated or made inoperable except as determined by a qualified rigger during hoisting and placing of purlins and single joists or as included in a site-specific erection plan. In the situation where an employer elects to deactivate a safety latch and create a potential safety hazard, the employer must receive approval from a qualified rigger or include a means for safely performing the activity in a site-specific erection plan. OSHA estimates that 7,391 projects will contain joist erection operations. Assuming that all of the employers will seek such an exemption and will elect to use a site-specific erection plan, it is estimated to take five minutes to document a means of performing the alternative method of erection and it will occur an average of ten times per project. The total estimated annual respondent burden for steel erection worksites is $299,489 and 6,159 burden hours.

Proposed § 1926.753(c)(2) requires that components of a multiple lift rigging assembly be specifically designed and assembled with a certified capacity for total assembly and for each individual attachment point and that the certification must be based on the manufacturer's specifications with a 5 to 1 safety factor for all components. OSHA believes it is necessary for employers to prepare this certification since multiple lifts are highly specialized operations and improperly designed assemblies could result in multiple steel members free falling. Special precautions must be taken when performing multiple lifts. Preparing this certification is essential to a safe multiple lift. OSHA estimates that employers will elect to perform multiple lifts on approximately 1,870 projects. The number of pieces of lifting equipment varies based on the project size. Assuming an average of two pieces of lifting equipment per project, one certificate per lifting assembly, and five minutes to prepare the certificate based on information already available from the manufacturer's specifications, the total estimated annual respondent burden for steel erection worksites is $17,422 and 312 burden hours.

Proposed § 1926.754(c)(3) prohibits workers from walking the top surface of any structural steel member which has been finish-coated with paint or similar material unless documentation or certification is provided that the finish paint or coating has not decreased the coefficient of friction (COF). The documentation or certification must be available at the site and to the steel erector. As explained in the summary and explanation section, coated steel can be an extremely dangerous hazard to steel erectors. OSHA believes it is necessary for the documentation to be prepared to assure the steel erector that the surface the employees are walking on is not any more slippery than uncoated steel. Without this documentation, slips and falls will

continue to occur due to slippery coated surfaces. OSHA estimates that 17,587 projects will have coated or painted steel and that only one certification need be prepared for all of the surfaces coated with the particular coating being used on each project. Assuming that it will take the manufacturer five minutes to prepare the documentation and the employer five minutes to transfer the information to the steel erector, the total estimated annual respondent burden for steel erection worksites is $132,086 and 2,932 burden hours.

Proposed § 1926.757(a)(3) requires that, when steel joists at columns span more than 60 feet (18.3 m), the joists shall be set in tandem with all bridging installed unless an alternative method of erection, which provides stability to the steel joist, is designed by a qualified person and is included in a site-specific erection plan. OSHA believes that a site-specific erection plan is necessary because the employer is choosing an alternative erection method to the one required in the standard. It is necessary to document the alternative method to ensure that it provides equivalent safety to the method specified in the standard. OSHA estimates that 7,391 projects will contain joist erection. Approximately 5 percent of the joists used span more than 60 feet. It is estimated that it will take the employer five minutes to include a description of the alternative erection method in the site-specific erection plan for all occurrences on the project. The total estimated annual respondent burden for steel erection worksites is $1,497 and 31 burden hours.

Proposed § 1926.757(a)(11) prohibits modifications from being made to steel joists that affect the strength of the joist without approval of the project structural engineer of record. OSHA believes it is necessary for this approval to be obtained from the engineer since any deviation from the initial design of the joist could alter the performance of the joist and ultimately affect the strength of the joist. Committee members stated that the approval could simply be a phone call to the engineer to evaluate the effect of the modification. OSHA estimates that 7,391 projects will include joist erection. A modification to a joist is only expected to occur about 5 percent of the time. It is usual and customary that any modifications be approved by the project structural engineer of record, therefore, the only burden taken is for the transfer of information. When a modification occurs, the engineer would review the modification once, and it would take five minutes for the transfer of information. The total estimated annual respondent burden for steel erection worksites is $928 and 31 burden hours.

Proposed § 1926.757(e)(4)(i) prohibits placing a bundle of decking on fewer than three steel joists unless the employer has determined from a qualified person and documented in a site-specific erection plan that the structure or portion of the structure is capable of supporting the load. OSHA believes it is necessary for employers to provide this documentation in a site-specific erection plan since it is the employer who has elected to deviate from the standard requirement. Landing decking bundles on joists has been determined by the Committee to be a dangerous activity. If an employer elects to perform this activity in a manner other than that described in the standard, it is essential that there be documentation that the alternative means is as safe as the requirement in the standard. This documentation would simply be an entry in the site-specific erection plan to describe the procedure to be used as approved by a qualified person. OSHA estimates that 7,391 projects will include joist erection. It is anticipated that only 2 percent of employers will elect to deviate from the standard. Only in very rare instances would an employer elect not to place deck bundles over at least three joists. For those who choose another means, it is expected that it will take an employer five minutes to describe the procedure in the site-specific erection plan covering all occurrences on the project. The total estimated annual respondent burden for steel erection worksites is $599 and 12 burden hours.

Proposed § 1926.758(g) prohibits purlins and girts from being used as an anchorage point for a fall arrest system unless written direction is obtained from a qualified person. OSHA believes that it is necessary to require written notification to verify that these lightweight members are capable of supporting the forces of a fall arrest system. Tying-off to purlins or girts can be extremely dangerous if the employer and employees do not know that these members have adequate strength for that use. OSHA estimates that 7,391 steel erection jobs will contain purlin and girt erection and approximately 10 percent of employers will elect to use the members as anchorage points for a fall arrest system. One written record can be obtained for the entire job and it is estimated that it will take an employer 30 minutes to prepare the written approval. The total estimated annual respondent burden for steel erection worksites is $11,133 and 370 burden hours.

Proposed § 1926.761 requires the employer to provide training for employees exposed to fall hazards, to those who will be engaged in multiple lift activities, to those who will work in controlled decking zones and to workers performing ''connecting'' activities. Information currently available to OSHA indicates that many workers are already receiving training in the above mentioned activities either to comply with other requirements in the construction standards or as a normal business practice. It should be noted that employers would have to instruct employees on the safe way to rig materials for multiple lifts and to ''connect'' as a normal business activity to accomplish the work of erecting the structure. Nearly all workers covered by the proposed rule are now using some fall protection measure, either while connecting, while working in decking operations or performing other tasks. OSHA estimates that it will take 30 minutes for an instructor to prepare for each training session and 60 minutes to communicate (or deliver) information to workers as required by the proposed standard. OSHA estimates the 38,980 employees will be trained in groups of 7 resulting in 5569 initial training sessions. To account for turnover, OSHA estimates 13% of the workforce (5067 employees) will receive turnover training annually thereafter and 2% of the workforce (780 employees) will need remedial training annually. These employees will also be instructed in groups of 7 and the preparatory time and delivery time remain the same. There are no records or other record keeping activities associated with this collection of information. The total estimated first year respondent burden for training is $536,975 and 9606 burden hours. For the second and subsequent years, only turnover and remedial training will be taken as a burden. Therefore, the total estimated respondent burden for the second and subsequent years is reduced to $70,043 and 1253 hours.

The total estimated annual respondent burden for all of the information collection requirements in this proposal for steel erection worksites is $3,889,127 and 88,834 burden hours.

OSHA believes that compliance with all of these requirements will help to reduce the number of fatalities and injuries in steel erection work.

OSHA requests comment from the public on all aspects of this collection of information. Specifically, OSHA requests comment on whether each proposed collection of information:

• Ensures that the collection of information is necessary for the proper performance of the function of the agency, including whether the information will have practical utility;

• Estimates accurately the projected burden including the validity of the methodology and assumptions used accurately;

• Enhances the quality, utility, and clarity of the information to be collected; and

• Minimizes the burden of the collection of information on those who are to respond, including through the use of appropriate automated, electronic, mechanical, or other technological collection techniques or other forms of information technology, e.g., permitting electronic submissions of responses.

Comments on the collections of information for the proposed provisions should be sent to the OMB Desk Officer for OSHA at Room 10235, 726 Jackson Place, N.W., Washington, D.C. 20503. Commenters are encouraged to send a copy of their comments on the collection of information to OSHA along with their other comments. The supporting statements for the collection of information requirements are available in both OSHA and OMB Docket Offices.

The proposed collections of information have been submitted to OMB for review under 44 U.S.C. § 3507(d) of the Paperwork Reduction Act of 1995. OMB is currently reviewing these OSHA proposed collections of information to determine their consistency with the Act. At this time OMB has not approved these collections of information.

XII. State Plan Standards

The 25 States and territories with their own OSHA approved occupational safety and health plans must adopt a comparable standard within six months of the publication date of a final standard. These 25 states and territories are: Alaska, Arizona, California, Connecticut (for state and local government employees only), Hawaii, Indiana, Iowa, Kentucky, Maryland, Michigan, Minnesota, Nevada, New Mexico, New York (for state and local government employees only), North Carolina, Oregon, Puerto Rico, South Carolina, Tennessee, Utah, Vermont, Virginia, Virgin Islands, Washington, and Wyoming. Until such time as a state standard is promulgated, Federal OSHA will provide interim enforcement assistance, as appropriate, in these states.

XIII. Public Participation

Comments

Interested persons are invited to submit written data, views, and arguments with respect to this proposal. These comments must be postmarked or e-mailed by November 12, 1998. Comments are to be submitted in quadruplicate or 1 original (hardcopy) and 1 disk (5¼ or 3½) in WP 5.0, 5.1, 6.0, 6.1, 8.0 or ASCII to: the Docket Officer, Docket S–775, U.S. Department of Labor, Occupational Safety and Health Administration, Room N2625, 200 Constitution Avenue, N.W., Washington, D.C. 20210, (202) 219–7894. Written comments of 10 pages or less may be transmitted by facsimile (fax) to the Docket Office at (202) 219–5046, provided an original and three (3) copies are sent to the Docket Office thereafter. Comments may be submitted electronically by e-mail to steelerection@osha-no.osha.gov. If the e-mail contains attached electronic files, the files must be in WordPerfect 5.0, 5.1, 6.0, 6.1, 8.0 or ASCII. When submitting a comment by e-mail, please include your name and address.

Any information not contained on disk or in the e-mail (e.g., studies, articles) must be submitted in quadruplicate. Written submissions must clearly identify the issues or specific provisions of the proposal which are addressed and the position taken with respect to each issue or provision. The data, views and arguments that are submitted will be available for public inspection and copying at the above address. All timely submissions received will be made a part of the record of this proceeding. The preliminary economic analysis and the exhibits cited in this document will be available for public inspection and copying at the above address. OSHA invites comments concerning the conclusions reached in the preliminary economic analysis.

Public Hearing

OSHA will hold an informal public hearing to begin at 10:00 a.m. on December 1, 1998. The hearing will be held in the Auditorium of the Frances Perkins Building, U.S. Department of Labor, 200 Constitution Avenue, N.W., Washington, D.C., 20210.

Notice of Intention To Appear at the Informal Hearing

Pursuant to section 6(b)(3) of the Occupational Safety and Health Act, OSHA will provide interested persons with an opportunity to submit oral testimony concerning the issues raised by the proposed standard, including economic and environmental impact, at the informal public hearing. The hearing is scheduled for December 1, 1998. If OSHA receives sufficient requests to participate in the hearing, the length of the hearing period may be extended. Conversely, the hearing may be shortened if there are few requests.

All persons desiring to participate at the hearing, including exercising their right to question witnesses, must file, in quadruplicate, a notice of intention to appear. The notice of intention to appear must be postmarked on or before November 12, 1998. The notice of intention to appear, which will be available for inspection and copying at the OSHA Technical Data Center Docket Office (Room N2625), telephone (202) 219–7894, must contain the following information:

1. The name, address, and telephone number of each person to appear;
2. The capacity in which the person will appear;
3. The approximate amount of time required for the presentation;
4. The specific issues that will be addressed;
5. A brief statement of the position that will be taken with respect to each issue addressed; and
6. Whether the party intends to submit documentary evidence and, if so, a brief summary of it.

The notice of intention to appear shall be mailed to: the Docket Officer, Docket S–775, U.S. Department of Labor, Occupational Safety and Health Administration, Room N2625, 200 Constitution Avenue, N.W., Washington, D.C. 20210, (202) 219–7894.

A notice of intention to appear also may be transmitted by facsimile to (202) 219–5046 (Attention: Docket Officer), by the same date, provided the original and three copies are sent to the same address and postmarked no more than three days later.

Individuals with disabilities wishing to attend the hearings should contact the Docket Officer to obtain appropriate accommodations at the hearing.

Filing of Testimony and Evidence Before the Hearing

Any party requesting more than ten minutes for a presentation at the hearing or who will present documentary evidence, must provide in quadruplicate, the complete text of its testimony, including all documentary evidence to be presented at the hearing. One copy must be unstapled and unbound and suitable for copying. These materials must be postmarked no later than November 17, 1998 and sent

to the Docket Officer at the address given above.

Each submission will be reviewed in light of the amount of time requested in the notice of intention to appear. In instances where the information contained in the submission does not justify the amount of time requested, a more appropriate amount of time will be allocated and the participant will be notified of that fact. Any party who has not substantially complied with the above requirements, may be limited to a ten minute presentation and may be requested to return for questioning at a later time. Any party who has not filed a notice of intention to appear may be allowed to testify, as time permits, at the discretion of the Administrative Law Judge who presides at the hearing.

Notices of intention to appear, testimony and evidence will be available for inspection and copying at the Docket Office at the address above.

Conduct and Nature of the Hearing

The hearing is scheduled to commence at 10:00 a.m. on December 1, 1998. At that time, any procedural matters relating to the proceeding will be resolved. OSHA rulemaking hearings are informal, as established in the legislative history of section 6 of the Act and codified in 29 CFR part 1911, OSHA's hearing regulations (cf. 29 CFR 1911.15(a)). Although the presiding officer is an Administrative Law Judge and questioning by interested persons is allowed on crucial issues, the proceeding will be essentially legislative in nature. The intent, in essence, is to provide an opportunity for effective oral presentation by interested persons which can be carried out expeditiously and in the absence of rigid procedures which might unduly impede or protract the rulemaking process.

Additionally, since the hearing is primarily for information gathering and clarification, it is an informal administrative proceeding rather than an adjudicative one.

The technical rules of evidence, for example, do not apply. The regulations that govern hearings and the pre-hearing guidelines to be issued for this hearing will ensure fairness and due process and also facilitate the development of a clear, accurate and complete record. Those rules and guidelines will be interpreted in a manner that furthers that development. Thus, questions of relevance, procedure and participation generally will be decided so as to favor development of the record.

The hearing will be conducted in accordance with 29 CFR part 1911. It should be noted that § 1911.4 specifies that the Assistant Secretary may, upon reasonable notice, issue alternative procedures to expedite proceedings or for other good cause.

The hearing will be presided over by an Administrative Law Judge who makes no decision or recommendation on the merits of OSHA's Proposal. The responsibility of the Administrative Law Judge is to ensure that the hearing proceeds at a reasonable pace and in an orderly manner. The Administrative Law Judge, therefore, will have the powers necessary and appropriate to conduct a full and fair informal hearing as provided in 29 CFR 1911, including the powers:

1. To regulate the course of the proceedings;
2. To dispose of procedural requests, objections and comparable matters;
3. To confine the presentation to the matters pertinent to the issues raised;
4. To regulate the conduct of those present at the hearing by appropriate means;
5. In the Judge's discretion, to question and permit the questioning of any witness, and to limit the time for questioning; and
6. In the Judge's discretion, to keep the record open for a reasonable stated time to receive written information and additional data, views, and arguments from any person who has participated in the oral proceedings.

Following the close of the hearing, the presiding Administrative Law Judge will certify the record of the hearing to the Assistant Secretary of Labor for Occupational Safety and Health.

XIV. Authority

This document was prepared under the direction of Charles N. Jeffress, Assistant Secretary of Labor for Occupational Safety and Health, U.S. Department of Labor, 200 Constitution Avenue, N.W., Washington, D.C. 20210.

List of Subjects in 29 CFR Part 1926

Structural steel erection, Construction industry, Construction safety, Occupational Safety and Health Administration, Occupational safety and health.

Signed at Washington, D.C., this 3d day of August, 1998.

Charles N. Jeffress,

Assistant Secretary of Labor.

Accordingly, pursuant to sections 4, 6, and 8 of the Occupational Safety and Health Act of 1970 (29 U.S.C. 653, 655, and 657); section 107 of the Contract Work Hours and Safety Standards Act (40 U.S.C. 333), Secretary of Labor's Order No. 6–96 (62 FR 111), and 29 CFR part 1911, it is proposed to amend part 1926 of Title 29 of the Code of Federal Regulations as set forth below.

PART 1926—[AMENDED]

Subpart M—[Amended]

1. The authority citation for subpart M of Part 1926 would be revised to read as follows:

Authority: Sec. 107, Contract Work Hours and Safety Standards Act (Construction Safety Act) (40 U.S.C. 333); Sec. 4, 6, 8, Occupational Safety and Health Act of 1970 (29 U.S.C. 653, 655, 657); Secretary of Labor's Orders No. 1–90 (55 FR 9033) and No. 6–96 (62 FR 111); and 29 CFR Part 1911.

2. Paragraph (a)(2)(iii) of § 1926.500 would be revised to read as follows:

§ 1926.500 Scope, application, and definitions applicable to this subpart.

(a) * * *

(2) * * *

(iii) Fall protection requirements for employees performing steel erection work (except for towers and tanks) are provided in subpart R of this part.

* * * * *

§ 1926.500 [Amended]

3. Paragraphs (a)(2)(iv), (a)(2)(v), and (a)(2)(vi) of § 1926.500 would be redesignated as (a)(2)(v), (a)(2)(vi) and (a)(2)(vii) respectively.

4. Paragraph (a)(2)(iv) § 1926.500 would be added to be revised to read as follows:

§ 1926.500 Scope, application, and definitions applicable to this subpart.

(a) * * *

(2) * * *

(iv) Requirements relating to fall protection for employees engaged in the erection of tanks and towers are provided in § 1926.105.

* * * * *

5. Paragraph (a)(3)(iv) of § 1926.500 would be revised to read as follows:

§ 1926.500 Scope, application, and definitions applicable to this subpart.

(a) * * *

(3) * * *

(iv) Section 1926.502 does not apply to the erection of tanks and towers. (Note: Section 1926.104 sets the criteria for body belts, lanyards and lifelines used for fall protection during tank and tower erection. Paragraphs (b), (c) and (f) of § 1926.107 provide definitions for the pertinent terms.)

* * * * *

Subpart R—[Amended]

6. The authority citation for subpart R of Part 1926 would be revised to read as follows:

Authority: Sec. 107, Contract Work Hours and Safety Standards Act (Construction Safety Act) (40 U.S.C. 333); Sec. 4, 6, and 8,

Occupational Safety and Health Act of 1970 (29 U.S.C. 653, 655, 657); Secretary of Labor's Order No. 6–96 (62 FR 111), and 29 CFR part 1911.

7. Subpart R of Part 1926 would be revised to read as follows:

Subpart R—Steel Erection

1926.750 Scope and application.
1926.751 Definitions.
1926.752 Site layout, site-specific erection plan and construction sequence.
1926.753 Hoisting and rigging.
1926.754 Structural steel assembly.
1926.755 Anchor bolts.
1926.756 Beams and columns.
1926.757 Open web steel joists.
1926.758 Pre-engineered metal buildings.
1926.759 Falling object protection.
1926.760 Fall protection.
1926.761 Training.

Appendix A to Subpart R—Guidelines for Establishing the Components of a Site-Specific Erection Plan: Non-Mandatory Guidelines for Complying With § 1926.752(d)

Appendix B to Subpart R—Acceptable Test Methods for Testing Slip-Resistance of Walking/Working Surfaces: Non-Mandatory Guidelines for Complying With § 1926.754(c)(3)

Appendix C to Subpart R—Illustrations of Bridging Terminus Points: Non-Mandatory Guidelines for Complying With § 1926.757(c)(3)

Appendix D to Subpart R—Illustration of the Use of Control Lines to Demarcate Controlled Decking Zones (CDZs): Non-Mandatory Guidelines for Complying With § 1926.760(c)(3)

Appendix E to Subpart R—Training: Non-Mandatory Guidelines for Complying With § 1926.761

Appendix F to Subpart R—Installation of Perimeter Safety Cables: Non-Mandatory Guidelines for Complying With § 1926.756(f) to Protect the Unprotected Side or Edge of a Walking/Working Surface

Subpart R—Steel Erection

§ 1926.750 Scope and Application.

(a) *Scope.* This subpart sets forth requirements to protect employees from the hazards associated with steel erection activities involved in the construction, alteration, and/or repair of single and multi-story buildings, bridges, and other structures where steel erection occurs. The requirements of this subpart apply to employers engaged in steel erection unless otherwise specified. This subpart does not cover electrical transmission towers, communication and broadcast towers, or tanks.

Note: Examples of structures where steel erection may occur include but are not limited to the following: single and multi-story buildings; pre-engineered metal buildings; lift slab/tilt-up structures; energy exploration structures; energy production, transfer and storage structures and facilities; auditoriums; malls; amphitheaters; stadiums; power plants; mills; chemical process structures; bridges; trestles; overpasses; underpasses; viaducts; aqueducts; aerospace facilities and structures; radar and communication structures; light towers; signage; billboards; scoreboards; conveyor systems, conveyor supports and related framing; stairways; stair towers; fire escapes; draft curtains; fire containment structures; monorails; aerialways; catwalks; curtain walls; window walls; store fronts; elevator fronts; entrances; skylights; metal roofs; industrial structures; hi-bay structures; rail, marine and other transportation structures; sound barriers; water process and water containment structures; air and cable supported structures; space frames; geodesic domes; canopies; racks and rack support structures and frames; platforms; walkways; balconies; atriums; penthouses; car dumpers; stackers/reclaimers; cranes and craneways; bins; hoppers; ovens; furnaces; stacks; amusement park structures and rides; and artistic and monumental structures.

(b) *Application.* Steel erection activities include hoisting, connecting, welding, bolting, and rigging structural steel, steel joists and metal buildings; installing metal deck, siding systems, miscellaneous metals, ornamental iron and similar materials; and moving point-to-point while performing these activities.

Note: Activities which could be considered covered by this subpart when they occur during the process of steel erection include but are not limited to the following: rigging, hoisting, laying out, placing, connecting, guying, bracing, dismantling, burning, welding, bolting, grinding, sealing, caulking, and all related activities for construction, alteration and/or repair of materials and assemblies such as structural steel; ferrous metals and alloys; non-ferrous metals and alloys; glass; plastics and synthetic composite materials; structural metal framing and related bracing and assemblies; anchoring devices; structural cabling; cable stays; permanent and temporary bents and towers; falsework for temporary supports of permanent steel members; architectural precast concrete, stone and other architectural materials mounted on steel frames; safety systems for steel erection; steel and metal joists; metal decking and raceway systems and accessories; metal roofing and accessories; metal siding; bridge flooring; cold formed steel framing; elevator beams; grillage; shelf racks; multi-purpose supports; crane rails and accessories; miscellaneous, architectural and ornamental metals and metal work; ladders; railings; handrails; fences and gates; gratings; trench covers; floor plates; castings; sheet metal fabrications; metal panels and panel wall systems; louvers; column covers; enclosures and pockets; stairs; perforated metals; ornamental iron work; expansion control including bridge expansion joint assemblies; slide bearings; hydraulic structures; fascias; soffit panels; penthouse enclosures; skylights; joint fillers; gaskets; sealants and seals; doors; windows; hardware, detention/security equipment and doors, windows and hardware; curtain walls/sloped glazing systems/structural glass curtain walls; translucent wall systems; conveying systems; building specialties; building equipment; machinery and plant equipment, furnishings and special construction.

§ 1926.751 Definitions.

Anchored bridging means that the steel joist bridging is connected to a bridging terminus point.

Bolted diagonal bridging means diagonal bridging which is bolted to a steel joist or joists.

Bridging clip means a device that is attached to the steel joist to allow the bolting of the bridging to the steel joist.

Bridging terminus point means a wall, beam, tandem joists (with all bridging installed and a horizontal truss in the plane of the top chord) or other element at an end or intermediate point(s) of a line of bridging that provides an anchor point for the steel joist bridging.

Choker means a wire rope or synthetic fiber rigging assembly that is used to attach a load to a hoisting device.

Clipped connection means the connection material on the end of a structural member intended for use in a double connection which has a notch at the bottom and/or top to allow the bolt(s) of the first member placed on the opposite side of the central member to remain in place. The notch(es) fits around the nut or bolt head of the opposing member to allow the second member to be bolted up without removing the bolt(s) holding the first member.

Cold formed joist means an open web joist fabricated with cold formed steel components.

Cold forming means the process of using press brakes, rolls, or other methods to shape steel into desired cross sections at room temperature.

Competent person (also defined in § 1926.32) means one who is capable of identifying existing and predictable hazards in the surroundings or working conditions which are unsanitary, hazardous, or dangerous to employees, and who has authorization to take prompt corrective measures to eliminate them.

Composite joists means steel joists designed to act in composite action with concrete floor and/or concrete roof slabs. Typically, a portion of the top chord of the joist (or a lug or similar device attached to the top chord of the joist) is embedded in the concrete slab.

Connector means an employee who, working with hoisting equipment, is placing and connecting structural members and/or components.

Construction load for joist erection means any load other than the weight of the employee(s), the joists and the bridging bundle.

Controlled Decking Zone (CDZ) means an area in which certain work (e.g., initial installation and placement of metal deck) may take place without the use of guardrail systems, personal fall arrest systems or safety net systems and where access to the zone is controlled.

Controlled load lowering means lowering a load by means of a mechanical hoist drum device that allows a hoisted load to be lowered with maximum control using the gear train or hydraulic components of the hoist mechanism. Controlled load lowering requires the use of the hoist drive motor, rather than the load hoist brake, to lower the load.

Controlling contractor means a prime contractor, general contractor, construction manager or any other legal entity at the site who has, by contract with other parties, the overall responsibility for the project, its planning, quality and completion.

Critical lift means a lift that exceeds 75 percent of the rated capacity of the crane or derrick, or requires the use of more than one crane or derrick.

Decking hole means a gap or void more than 2 inches (5.1 cm) in its least dimension and less than 12 inches (30.5 cm) in its greatest dimension in a floor, roof or other walking/working surface. Pre-engineered holes in cellular decking are not included in this definition.

Derrick floor means an elevated floor of a building or structure that has been designated to receive hoisted pieces of steel prior to final placement.

Double connection means an attachment method where the connection point is intended for two pieces of steel which share common bolts on either side of a central piece.

Erection bridging means the bolted diagonal bridging that is required to be installed prior to releasing the hoisting cables from the steel joists.

Fall restraint (Positioning device) system means a body belt or body harness used to prevent an employee from free falling more than 24 inches (61 cm) and where self rescue can be assured. It consists of an anchorage, connectors, a body belt or harness and may include a lanyard, deceleration device, lifeline, or suitable combination of these.

Girt (in pre-engineered metal buildings) means a ''Z'' or ''C'' shaped member formed from sheet steel spanning between primary framing and supporting wall material.

Headache ball means a weighted hook that is used to attach loads to the hoist load line of the crane.

Hoisting equipment means commercially manufactured lifting equipment designed to lift and position a load of known weight to an erection location at some known elevation and horizontal distance from the equipment's center of rotation. ''Hoisting equipment'' includes but is not limited to cranes, derricks, tower cranes, barge-mounted derricks or cranes, gin poles and gantry hoist systems. A ''come-a-long'' (a mechanical device, usually consisting of a chain or cable attached at each end, that is used to facilitate movement of materials through leverage) is not considered ''hoisting equipment.''

Leading edge means the unprotected side and edge of a floor, roof, or formwork for a floor or other walking/working surface (such as deck) which changes location as additional floor, roof, decking or formwork sections are placed, formed or constructed.

Metal deck means a commercially manufactured, structural grade, cold rolled metal panel formed into a series of parallel ribs; for this subpart, this includes metal floor and roof decks, standing seam metal roofs, other metal roof systems and other products such as bar gratings, checker plate, expanded metal panels, and similar products. After installation and proper fastening, these decking materials serve a combination of functions including, but not limited to: a structural element designed in combination with the structure to resist, distribute and transfer loads, stiffen the structure and provide a diaphragm action; a walking/working surface; a form for concrete slabs; a support for roofing systems; and a finished floor or roof.

Multiple lift rigging means a rigging assembly manufactured by wire rope rigging suppliers that facilitates the attachment of up to five independent loads to the hoist rigging of a crane.

Opening means a gap or void 12 inches (30.5 cm) or more in its least dimension in a floor, roof or other walking/working surface. For the purposes of this subpart, skylights and smoke domes that do not meet the strength requirements of § 1926.760(d)(1) shall be regarded as openings.

Permanent floor means a structurally completed floor at any level or elevation (including slab on grade).

Personal fall arrest system means a system used to arrest an employee in a fall from a working level. A personal fall arrest system consists of an anchorage, connectors, a body belt or body harness and may include a lanyard, deceleration device, lifeline, or suitable combination of these. (As of January 1, 1998, the use of a body belt for fall arrest is prohibited by subpart M of this part.)

Pre-engineered metal building means a field-assembled building system consisting of framing, roof and wall coverings, and generally made of steel. Typically, in a pre-engineered metal building, many of these components are cold-formed shapes. These individual parts are fabricated in one or more manufacturing facilities and shipped to the job site for assembly into the final structure. Engineering design of the system is normally the responsibility of the pre-engineered metal building manufacturer.

Project structural engineer of record means the registered, licensed professional responsible for the design of structural steel framing and whose seal appears on the structural contract documents.

Purlin (in pre-engineered metal buildings) means a ''Z'' or ''C'' shaped member formed from sheet steel spanning between primary framing and supporting roof material.

Qualified person (also defined in § 1926.32) means one who, by possession of a recognized degree, certificate, or professional standing, or who by extensive knowledge, training, and experience, has successfully demonstrated the ability to solve or resolve problems relating to the subject matter, the work, or the project.

Safety deck attachment means an initial attachment that is used to secure an initially placed sheet of decking to keep proper alignment and bearing with structural support members.

Seat means a structural attachment mounted to a structural member beneath a connection point, designed to support an incoming member that is to be connected to the first member.

Shear connector means headed steel studs, steel bars, steel lugs, and similar devices which are attached to a structural member for the purpose of achieving composite action with concrete.

Steel erection means the erection of steel buildings, bridges and other structures, including the installation of steel flooring and roofing members and all planking and decking used during the process of erection.

Steel joist means an open web, secondary load-carrying member of 144 feet (43.9 m) or less suitable for the support of floors and roofs. This does not include structural steel trusses or cold-formed joists.

Steel joist girder means an open web, primary load-carrying member,

designed by the manufacturer, suitable for the support of floors and roofs. This does not include structural steel trusses.

Steel truss means an open web member designed of structural steel components by the project structural engineer of record. For the purposes of this subpart, a steel truss is considered equivalent to a solid web structural member.

Unprotected sides and edges means any side or edge (except at entrances to points of access) of a walking/working surface, e.g., floor, roof, ramp or runway, where there is no wall or guardrail system at least 39 inches (1.0 m) high.

§ 1926.752 Site layout, site-specific erection plan and construction sequence.

(a) *Approval to begin steel erection.* Before authorizing the commencement of steel erection, the controlling contractor must provide the steel erector with the following written notifications:

(1) The concrete in the footings, piers and walls or the mortar in the masonry piers and walls has attained, on the basis of an appropriate ASTM standard test method of field-cured samples, either 75 percent of the intended minimum compressive design strength or sufficient strength to support loads imposed during steel erection.

(2) Any repairs, replacements and modifications to the anchor bolts were conducted in accordance with § 1926.755(b).

(b) *Site layout.* The controlling contractor shall provide and maintain the site layout as follows:

(1) Adequate access roads into and through the site for the safe delivery and movement of derricks, cranes, trucks, other necessary equipment, and the material to be erected and means and methods for pedestrian and vehicular control; and

(2) A firm, properly graded, drained area, readily accessible to the work with adequate space for the safe storage of materials and the safe operation of the erector's equipment.

(c) *Overhead protection.* All hoisting operations in steel erection shall be pre-planned in accordance with §§ 1926.753(b) and 1926.759 to ensure that no employee is required to be exposed to overhead hazards.

(d) *Site-specific erection plan.* Where employers elect, due to conditions specific to the site, to develop alternate means and methods that provide employee protection in accordance with § 1926.753(a)(5), § 1926.757(a)(3) or § 1926.757(e)(4)(i), a site-specific erection plan shall be developed by a qualified person and be available at the work site. Guidelines for establishing a site-specific erection plan are contained in appendix A to this subpart.

§ 1926.753 Hoisting and rigging.

The following provisions supplement the requirements of § 1926.550 regarding the hazards associated with hoisting and rigging.

(a) *General.* (1) Pre-shift visual inspection of cranes.

(i) Cranes being used in steel erection activities shall be visually inspected prior to each shift by a competent person; the inspection shall include observation for deficiencies during operation. At a minimum, this inspection shall include the following:

(A) All control mechanisms for maladjustments;

(B) Control and drive mechanisms for excessive wear of components and contamination by lubricants, water or other foreign matter;

(C) Safety devices, including but not limited to, boom angle indicators, boom stops, boom kick-out devices, anti-two block devices, and load moment indicators where required;

(D) Air, hydraulic, and other pressurized lines for deterioration or leakage, particularly those which flex in normal operation;

(E) Hooks and latches for deformation, chemical damage, cracks, or wear;

(F) Wire rope reeving for compliance with hoisting equipment manufacturer's specifications;

(G) Electrical apparatus for malfunctioning, signs of excessive deterioration, dirt, or moisture accumulation;

(H) Hydraulic system for proper fluid level;

(I) Tires for proper inflation and condition;

(J) Ground conditions around the hoisting equipment for proper support, including ground settling under and around outriggers, ground water accumulation, or other similar conditions;

(K) The hoisting equipment for level position; and

(L) The hoisting equipment for level position after each move and setup.

(ii) If any deficiencies are identified, an immediate determination shall be made by the competent person as to whether the deficiency constitutes a hazard.

(iii) If the deficiency is determined to constitute a hazard, the hoisting equipment shall be removed from service until the deficiency has been corrected.

(iv) The employer shall obtain and/or prepare a certification record of the pre-shift inspection required by paragraph (a)(1)(i) of this section which includes the date the hoisting equipment items were inspected; the signature of the person who inspected the hoisting equipment items; and a serial number, or other identifier, for the hoisting equipment inspected.

(v) The operator shall be responsible for those operations under the operator's direct control. Whenever there is any doubt as to safety, the operator shall have the authority to stop and refuse to handle loads until safety has been assured.

(2) A qualified rigger (i.e., a rigger who is also a qualified person) shall inspect the rigging prior to each shift in accordance with § 1926.251.

(3) The headache ball, hook or load shall not be used to transport personnel except as provided in paragraph (a)(1)(v)(4) of this section.

(4) Paragraph (g)(2) of § 1926.550 notwithstanding, cranes or derricks may be used to hoist employees on a personnel platform when work under this subpart is being conducted, provided that all other provisions of § 1926.550(g) are met.

(5) Safety latches on hooks shall not be deactivated or made inoperable except:

(i) When a qualified rigger has determined that the hoisting and placing of purlins and single joists can be performed more safely by doing so; or

(ii) When equivalent protection is provided in a site-specific erection plan.

(b) *Working under loads.* (1) Routes for suspended loads shall be pre-planned to ensure that no employee is required to work directly below a suspended load, except for:

(i) Employees engaged in the initial connection of steel; or

(ii) Employees necessary for the hooking or unhooking of the load.

(2) When working under suspended loads, the following criteria shall be met:

(i) Materials being hoisted shall be rigged to prevent unintentional displacement;

(ii) Hooks with self-closing safety latches or their equivalent shall be used to prevent components from slipping out of the hook; and

(iii) All loads shall be rigged by a qualified rigger.

(c) *Multiple lift rigging procedure.* (1) A multiple lift shall only be performed if the following criteria are met:

(i) A multiple lift rigging assembly is used;

(ii) A maximum of five (5) members is hoisted per lift;

(iii) Only structural members are lifted; and

(iv) All employees engaged in the multiple lift have been trained in these

procedures in accordance with § 1926.761(c)(1).

(2) Components of the multiple lift rigging assembly shall be specifically designed and assembled with a maximum capacity for total assembly and for each individual attachment point. This capacity, certified by the manufacturer or a qualified rigger, shall be based on the manufacturer's specifications with a 5 to 1 safety factor for all components.

(3) The total load shall not exceed:

(i) The rated capacity of the hoisting equipment specified in the hoisting equipment load charts; or

(ii) The rigging capacity specified in the rigging rating chart.

(4) The multiple lift rigging assembly shall be rigged with the members:

(i) Attached at their center of gravity and maintained reasonably level;

(ii) Rigged from the top down; and

(iii) Rigged at least 7 feet (2.1 m) apart.

(5) The members on the multiple lift rigging assembly shall be set from the bottom up.

(6) Controlled load lowering shall be used whenever the load is over the connectors.

§ 1926.754 Structural steel assembly.

(a) Structural stability shall be maintained at all times during the erection process.

(b) The following additional requirements shall apply for multi-story structures:

(1) The permanent floors shall be installed as the erection of structural members progresses, and there shall be not more than eight stories between the erection floor and the upper-most permanent floor, except where the structural integrity is maintained as a result of the design.

(2) At no time shall there be more than four floors or 48 feet (14.6 m), whichever is less, of unfinished bolting or welding above the foundation or uppermost permanently secured floor, except where the structural integrity is maintained as a result of the design.

(3) A fully planked or decked floor or nets shall be maintained within 2 stories or 30 feet (9.1 m), whichever is less, directly under any erection work being performed.

(c) *Walking/working surfaces*—(1) *Shear connectors and other similar devices*—(i) *Tripping hazards.* Shear connectors (such as headed steel studs, steel bars or steel lugs), reinforcing bars, deformed anchors or threaded studs shall not be attached to the top flanges of beams, joists or beam attachments so that they project vertically from or horizontally across the top flange of the member until after the decking, or other walking/working surface, has been installed.

(ii) *Installation of shear connectors on composite floors, roofs and bridge decks.* When shear connectors are utilized in construction of composite floors, roofs and bridge decks, employees shall lay out and install the shear connectors after the decking has been installed, using the deck as a working platform. Shear connectors shall not be installed from within a controlled decking zone (CDZ), as specified in § 1926.760(c)(8).

(2) *Metal decking.* [Reserved]

(3) *Skeletal structural steel.* Workers shall not be permitted to walk the top surface of any structural steel member installed after [*effective date of final rule*] which has been finish-coated with paint or similar material unless documentation or certification, based on an appropriate ASTM standard test method, is provided that the finished coat has not decreased the coefficient of friction (COF) from that of the original steel before it was finish-coated. Such documentation or certification shall be available at the site and to the steel erector (see appendix B of this subpart).

(d) *Plumbing-up.* (1) Connections of the equipment used in plumbing-up shall be properly secured.

(2) Plumbing-up equipment shall be removed only with the approval of a competent person.

(e) *Decking*—(1) *Hoisting, landing and placing of deck bundles.* (i) Bundle packaging and strapping shall not be used for hoisting unless specifically designed for that purpose.

(ii) If loose items such as dunnage, flashing, or other materials are placed on the top of deck bundles to be hoisted, such items shall be secured to the bundles.

(iii) Bundles of decking on joists shall be landed in accordance with § 1926.757(e)(4).

(iv) Bundles shall be landed on framing members so that enough support is provided to allow the bundles to be unbanded without dislodging the bundles from the supports.

(v) At the end of the shift or when environmental or jobsite conditions require, decking shall be secured against displacement.

(2) *Roof and floor openings.* Metal deck at roof and floor openings shall be installed as follows:

(i) Where structural design and constructability allow, framed deck openings shall have structural members turned down to allow continuous deck installation.

(ii) Roof and floor openings shall be covered during the decking process. Where structural design does not allow openings to be covered, they shall be protected in accordance with § 1926.760(a)(2).

(iii) Decking holes and openings shall not be cut until essential to the construction process, and openings shall be protected immediately in accordance with § 1926.760(d) or be otherwise permanently filled.

(3) *Space around columns.* Wire mesh, exterior plywood, or equivalent, shall be used around columns where planks or decking do not fit tightly.

(4) *Floor decking.* Floor decking shall be laid tightly and secured to prevent accidental movement or displacement.

(5) *Derrick floors.* (i) A derrick floor shall be fully decked and/or planked and the steel member connections completed to support the intended floor loading.

(ii) Temporary loads placed on a derrick floor shall be distributed over the underlying support members so as to prevent local overloading of the deck material.

§ 1926.755 Anchor bolts.

(a) *General requirements for erection stability.* (1) All columns shall be anchored by a minimum of 4 anchor bolts. Each column anchor bolt assembly, including the welding of the column to the base plate, shall be designed to resist a 300 pound (136.2 kg) eccentric load located 18 inches (.46 m) from the column face in each direction at the top of the column shaft.

(2) Columns shall be set on level finished floors, pre-grouted leveling plates, leveling nuts, or shim packs which are adequate to transfer the construction loads.

(3) Unstable columns shall be evaluated by a competent person and be guyed or braced where deemed necessary.

(b) *Repair, replacement or field modification.*

(1) Anchor bolts shall not be repaired, replaced or field-modified without the approval of the project structural engineer of record.

(2) Such approval under paragraph (b)(1) of this section shall state whether the repair, replacement or modification has made guying or bracing of the column necessary.

(3) Prior to the erection of a column, the controlling contractor shall provide written notification to the steel erector if there has been any repair, replacement or modification of the anchor bolts of that column.

§ 1926.756 Beams and columns.

(a) *General.* During the final placing of solid web structural members, the load shall not be released from the hoisting line until the members are secured with at least two bolts per connection drawn up wrench-tight or the equivalent as specified by the project structural engineer of record, except as specified in paragraph (b) of this section.

(b) *Diagonal bracing.* Solid web structural members used as diagonal bracing shall be secured by at least one bolt per connection drawn up wrench-tight or the equivalent as specified by the project structural engineer of record.

(c) *Double connections at columns and/or at beam webs over a column.* When two structural members on opposite sides of a column web, or a beam web over a column, share common connection holes, at least one bolt with its wrench-tight nut shall remain connected to the first member unless a shop-attached or field-bolted seat or similar connection device is present to secure the second member and prevent the column from being displaced. When seats are provided, the connection between the seat and the structural member that it supports shall be bolted together before the nuts are removed for the double connection.

(d) *Column splices.* Each column splice shall be designed to resist a 300 pound (136.2 kg) eccentric load located 18 inches (.46 m) from the column face in each direction at the top of the column shaft.

(e) *Perimeter columns.* Perimeter columns shall extend a minimum of 48 inches (1.2 m) above the finished floor to permit installation of perimeter safety cables prior to erection of the next tier except where structural design and constructibility do not allow. (See appendix F to this subpart.)

(f) *Perimeter safety cables.* (1) Perimeter safety cables shall be installed at the perimeter during the structural steel assembly of multi-story structures.

(2) Perimeter safety cables shall consist of ½-inch wire rope or equivalent installed at 42–45 inches above the finished floor and at the midpoint between the finished floor and the top cable.

(3) Holes or other devices shall be provided by the fabricator/supplier and shall be in or attached to perimeter columns at 42–45 inches above the finished floor and the midpoint between the finished floor and the top cable to permit installation of perimeter safety cables except where structural design and constructibility allow. (See appendix F to this subpart.)

§ 1926.757 Open web steel joists.

(a) *General.* (1) In steel framing, where steel joists or steel joist girders are utilized and columns are not framed in at least two directions with solid web structural steel members, the steel joist or steel joist girder shall be field-bolted at or near columns to provide lateral stability to the column during erection.

(2) Where steel joists at or near columns span 60 feet (18.3 m) or less, the joist shall be designed with sufficient strength to allow one employee to release the hoisting cable without the need for erection bridging.

(3) Where steel joists at columns span more than 60 feet (18.3 m), the joists shall be set in tandem with all bridging installed unless an alternative method of erection, which provides equivalent stability to the steel joist, is designed by a qualified person and is included in the site-specific erection plan.

(4) A stabilizer plate shall be provided on each column for steel joists and steel joist girders and shall extend at least 3 inches (76 mm) below the bottom chord of the joist with a 13/16 inch (21 mm) hole to provide an attachment point for guying or plumbing cables.

(5) Bottom chords of steel joist girders and steel joists required by paragraph (a)(1) of this section shall be stabilized to prevent rotation during erection.

(6) A steel joist shall not be placed on any support structure unless such structure is stabilized.

(7) When steel joist(s) are landed on a structure, they shall be secured to prevent unintentional displacement prior to installation.

(8) Except for steel joists that have been pre-assembled into panels, connections of individual steel joists to steel structures in bays of 40 feet (12.2 m) or more shall be fabricated to allow for field bolting during erection.

(9) A bridging terminus point shall be established before bridging is installed. (See appendix C to this subpart.)

(10) Steel joists and steel joist girders shall not be used as anchorage points for a fall arrest system unless written direction to do so is obtained from a qualified person.

(11) No modification that affects the strength of a steel joist shall be made without the approval of the project structural engineer of record.

(b) *Attachment of steel joists and steel joist girders.* (1) Each end of ''K'' series steel joists shall be attached to the support structure with a minimum of two ⅛-inch (3 mm) fillet welds 1 inch (25 mm) long or with two ½-inch (13 mm) bolts, or the equivalent.

(2) Each end of ''LH'' and ''DLH'' series steel joists and steel joist girders shall be attached to the support structure with a minimum of two ¼-inch (6 mm) fillet welds 2 inches (51 mm) long, or with two ¾-inch (19 mm) bolts, or the equivalent.

(3) Except as provided in paragraph (b)(4) of this section, each steel joist shall be attached to the support structure, at least at one end, immediately upon placement in the final erection position and before additional joists are placed.

(4) Steel joists that have been pre-assembled into panels through the installation of bridging shall be attached to the structure at each corner before the hoisting cables are released.

(c) *Erection of steel joists.* (1) One end of each steel joist shall be attached to the support structure before an employee is allowed on the steel joist.

(2) On steel joists that span 40 feet (12.2 m) or less and that do not require erection bridging per Tables A and B, only one employee shall be allowed on the joist until all bridging is installed and anchored.

(3) Employees shall not be allowed on steel joists that span more than 40 feet except in accordance with § 1926.757(d).

(4) When permanent bridging terminus points cannot be used during erection, additional temporary bridging terminus points are required to provide stability. (See appendix C of this subpart.)

(d) *Erection bridging.* (1) Where the span of the steel joist is equal to or greater than the span shown in Tables A and B, or in bays of 40 feet (12.2 m) through 60 feet (18.3 m), the following shall apply:

(i) The row of erection bridging nearest the midspan of the steel joist shall be bolted diagonal bridging;

(ii) Hoisting cables shall not be released until this bolted diagonal erection bridging is installed; and

(iii) No more than one employee shall be allowed on these spans until all other bridging is installed and anchored.

(2) Where the span of the steel joist is over 60 feet (18.3 m) through 100 feet (30.5 m), the following shall apply:

(i) The two rows of erection bridging nearest the third points of the steel joist shall be bolted diagonal bridging;

(ii) Hoisting cables shall not be released until this bolted diagonal erection bridging is installed; and

(iii) No more than two employees shall be allowed on these spans until all other bridging is installed and anchored.

(3) Where the span of the steel joist is over 100 feet (30.5 m) through 144 feet (43.9 m), the following shall apply:

(i) All rows of bridging shall be bolted diagonal bridging;

(ii) Hoisting cables shall not be released until all bridging is installed; and

(iii) No more than two employees shall be allowed on these spans until all bridging is installed.

(4) For steel members spanning over 144 feet (43.9 m), the erection methods used shall be in accordance with § 1926.756.

(5) Where any steel joist specified in paragraphs (c)(2) and (d)(1), (d)(2), and (d)(3) of this section is a bottom chord bearing joist, a row of bolted diagonal bridging shall be provided near the support(s). This bridging shall be installed before the hoisting cable(s) is released.

(6) When bolted diagonal erection bridging is required by this section, the following shall apply:

(i) The bridging shall be indicated on the erection drawing;

(ii) The erection drawing shall be the exclusive indicator of the proper placement of this bridging;

(iii) Shop-installed bridging clips, or functional equivalents, shall be provided where the bridging bolts to the steel joists;

(iv) When two pieces of bridging are attached to the steel joist by a common bolt, the nut that secures the first piece of bridging shall not be removed from the bolt for the attachment of the second; and

(v) Bridging attachments shall not protrude above the top chord of the steel joist.

BILLING CODE 4510–26–P

TABLE A.—ERECTION BRIDGING FOR SHORT SPAN JOISTS

Joist	Span
8K1	NM
10K1	NM
12K1	23–0
12K3	NM
12K5	NM

TABLE A.—ERECTION BRIDGING FOR SHORT SPAN JOISTS—Continued

Joist	Span
14K1	27–0
14K3	NM
14K4	NM
14K6	NM
16K2	29–0
16K3	30–0
16K4	32–0
16K5	32–0
16K6	NM
16K7	NM
16K9	NM
18K3	31–0
18K4	32–0
18K5	33–0
18K6	35–0
18K7	NM
18K9	NM
18K10	NM
20K3	32–0
20K4	34–0
20K5	34–0
20K6	36–0
20K7	39–0
20K9	39–0
20K10	NM
22K4	34–0
22K5	35–0
22K6	36–0
22K7	40–0
22K9	40–0
22K10	40–0
22K11	40–0
24K4	36–0
24K5	38–0
24K6	39–0
24K7	40–0
24K8	40–0
24K9	40–0
24K10	40–0
24K12	40–0
26K5	38–0
26K6	39–0
26K7	40–0
26K8	40–0
26K9	40–0
26K10	40–0
26K12	40–0
28K6	40–0
28K7	40–0
28K8	40–0
28K9	40–0

TABLE A.—ERECTION BRIDGING FOR SHORT SPAN JOISTS—Continued

Joist	Span
28K10	40–0
28K12	40–0
30K7	40–0
30K8	40–0
30K9	40–0
30K10	40–0
30K11	40–0
30K12	40–0
10KCS1	NM
10KCS2	NM
10KCS3	NM
12KCS1	NM
12KCS2	NM
12KCS3	NM
14KCS1	NM
14KCS2	NM
14KCS3	NM
16KCS2	NM
16KCS3	NM
16KCS4	NM
16KCS5	NM
18KCS2	35–0
18KCS3	NM
18KCS4	NM
18KCS5	NM
20KCS2	36–0
20KCS3	39–0
20KCS4	NM
20KCS5	NM
22KCS2	36–0
22KCS3	40–0
22KCS4	40–0
22KCS5	40–0
24KCS2	39–0
24KCS3	40–0
24KCS4	40–0
24KCS5	40–0
26KCS2	39–0
26KCS3	40–0
26KCS4	40–0
26KCS5	40–0
28KCS2	40–0
28KCS3	40–0
28KCS4	40–0
28KCS5	40–0
30KC53	40–0
30KCS4	40–0
30KCS5	40–0

NM=diagonal bolted bridging not mandatory for joists under 40 feet.

TABLE B.—ERECTION BRIDGING FOR LONG SPAN JOISTS

Joist	Span
18LH02	33–0.
18LH03	NM.
18LH04	NM.
18LH05	NM.
18LH06	NM.
18LH07	NM.
18LH08	NM.
18LH09	NM.
20LH02	33–0.
20LH03	38–0.
20LH04	NM.
20LH05	NM.
20LH06	NM.
20LH07	NM.

TABLE B.—ERECTION BRIDGING FOR LONG SPAN JOISTS—Continued

Joist	Span
20LH08	NM.
20LH09	NM.
20LH10	NM.
24LH03	35–0.
24LH04	39–0.
24LH05	40–0.
24LH06	40–0.
24LH07	40–0.
24LH08	40–0.
24LH09	40–0.
24LH10	40–0.
24LH11	40–0.
28LH05	40–0.
28LH06	40–0.
28LH07	40–0.
28LH08	40–0.
28LH09	40–0.
28LH10	40–0.
28LH11	40–0.
28LH12	40–0.
28LH13	40–0.
32LH06	40–0 through 60–0.
32LH07	40–0 through 60–0.
32LH08	40–0 through 60–0.
32LH09	40–0 through 60–0.
32LH10	40–0 through 60–0.
32LH11	40–0 through 60–0.
32LH12	40–0 through 60–0.
32LH13	40–0 through 60–0.
32LH14	40–0 through 60–0.
32LH15	40–0 through 60–0.
36LH07	40–0 through 60–0.
36LH08	40–0 through 60–0.
36LH09	40–0 through 60–0.
36LH10	40–0 through 60–0.
36LH11	40–0 through 60–0.
36LH12	40–0 through 60–0.
36LH13	40–0 through 60–0.
36LH14	40–0 through 60–0.
36LH15	40–0 through 60–0.

NM = diagonal bolted bridging not mandatory for joists under 40 feet.

BILLING CODE 4510–26–M

(e) *Landing and placing loads.* (1) During the construction period, the employer placing a load on steel joists shall ensure that the load is distributed so as not to exceed the carrying capacity of any steel joist.

(2) Except for paragraph (e)(4) of this section, no construction loads are allowed on the steel joists until all bridging is installed and anchored and all joist-bearing ends are attached.

(3) The weight of a bundle of joist bridging shall not exceed a total of 1000 pounds (454 kg). A bundle of joist bridging shall be placed on a minimum of 3 steel joists that are secured at one end. The edge of the bridging bundle shall be positioned within 1 foot (.30 m) of the secured end.

(4) No bundle of decking may be placed on steel joists until all bridging has been installed and anchored and all joist bearing ends attached, unless all of the following conditions are met:

(i) The employer has first determined from a qualified person and documented in a site-specific erection plan that the structure or portion of the structure is capable of supporting the load;

(ii) The bundle of decking is placed on a minimum of 3 steel joists;

(iii) The joists supporting the bundle of decking are attached at both ends;

(iv) At least one row of bridging is installed and anchored;

(v) The total weight of the decking does not exceed 4000 pounds (1816 kg); and

(vi) The edge of the bundle of decking is placed within 1 foot (.30 m) of the bearing surface of the joist end.

(5) The edge of the construction load shall be placed within 1 foot (.30 m) of the bearing surface of the joist end.

§ 1926.758 Pre-engineered metal buildings.

(a) Erection of pre-engineered metal buildings shall not begin until the site layout has been completed in accordance with § 1926.752(b).

(b) Each column shall be anchored by a minimum of 4 anchor bolts.

(c) Rigid frames shall have 50 percent of their bolts or the number of bolts specified by the manufacturer (whichever is greater) installed and tightened on both sides of the web adjacent to each flange before the hoisting equipment is released.

(d) Construction loads shall not be placed on any structural steel framework unless such framework is safely bolted, welded or otherwise adequately secured.

(e) In girt and eave strut to frame connections, when girts or eave struts share common connection holes the following shall apply:

(1) At least one bolt with its wrench-tight nut shall remain connected to the second member unless a field-attached seat or similar connection device is present to secure the first member so

that the girt or eave strut is always secured against displacement; and

(2) The seat or similar connection device shall be provided by the manufacturer of the girt or eave strut.

(f) Both ends of all steel joists or cold-formed joists shall be fully bolted and/or welded to the support structure before:

(1) Releasing the hoisting cables;

(2) Allowing an employee on the joists; or

(3) Allowing any construction loads on the joists.

(g) Purlins and girts shall not be used as an anchorage point for a fall arrest system unless written direction to do so is obtained from a qualified person.

(h) Purlins may only be used as a walking/working surface when installing safety systems, after all permanent bridging has been installed and fall protection is provided.

(i) Construction loads may be placed only within a zone that is within 8 feet (2.5 m) of the centerline of the primary support member.

§ 1926.759 Falling object protection.

(a) *Securing loose items aloft.* All materials, equipment, and tools, which are not in use while aloft, shall be secured against accidental displacement.

(b) *Overhead protection.* The controlling contractor shall ensure that no other construction processes take place below steel erection unless adequate overhead protection for the employees below is provided.

§ 1926.760 Fall protection.

(a) *General requirements.* (1) Except as provided by paragraph (a)(3) of this section, each employee covered by this subpart who is on a walking/working surface with an unprotected side or edge more than 15 feet (4.6 m) above a lower level shall be protected from fall hazards.

(2) Protection from fall hazards required by this subpart shall consist of perimeter safety cable systems, guardrail systems, safety net systems, or personal fall arrest or fall restraint (positioning device) systems. Guardrail systems, safety net systems, personal fall arrest systems and fall restraint (positioning device) systems shall conform to the criteria set forth in § 1926.502.

(3) Connectors and employees working in controlled decking zones shall be protected from fall hazards as provided in paragraphs (b) and (c) of this section, respectively.

(b) *Connectors.* Each connector shall:

(1) Be protected from fall hazards of more than two stories or 30 feet (9.1 m) above a lower level, whichever is less;

(2) Have completed connector training in accordance with § 1926.761; and

(3) Be provided, at heights over 15 and up to 30 feet above a lower level, with a personal fall arrest or fall restraint (positioning device) system and wear the equipment necessary to be able to be tied off; or be provided with other means of protection from fall hazards in accordance with paragraph (a)(2) of this section.

(c) *Controlled decking zone (CDZ).* A controlled decking zone may be established in that area of the structure over 15 and up to 30 feet above a lower level where metal deck is initially being installed and forms the leading edge of a work area. In each CDZ, the following shall apply:

(1) Each employee working at the leading edge in a CDZ shall be protected from fall hazards of more than two stories or 30 feet (9.1 m), whichever is less.

(2) Access to a CDZ shall be limited exclusively to those employees engaged in leading edge work.

(3) The boundaries of a CDZ shall be designated and clearly marked. The CDZ shall not be more than 90 feet (27.4 m) wide and 90 feet (27.4 m) deep from any leading edge. The CDZ shall be marked by the use of control lines or the equivalent. Examples of acceptable procedures for demarcating CDZ's can be found in Appendix D to this subpart.

(4) Each employee working in a CDZ shall have completed CDZ training in accordance with § 1926.761.

(5) During initial placement, deck panels shall be placed to ensure full support by structural members.

(6) Unsecured decking in a CDZ shall not exceed 3000 square feet (914.4 m^2).

(7) Safety deck attachments shall be performed in the CDZ from the leading edge back to the control line and shall have at least two attachments per deck panel.

(8) Final deck attachments and installation of shear connectors shall not be performed in the CDZ.

(d) *Covering roof and floor openings.* (1) Covers for roof and floor openings required by § 1926.754 (e)(2)(ii) and (e)(2)(iii) shall be capable of supporting, without failure, the greater of either:

(i) 30 psf for roofs and 50 psf for floors; or

(ii) twice the weight of the employees, equipment and materials that may be imposed on the cover at any one time.

(2) All covers shall be secured when installed to prevent accidental displacement by the wind, equipment or employees.

(3) All covers shall be painted with high-visibility paint or shall be marked with the word ''HOLE'' or ''COVER'' to provide warning of the hazard.

(4) Smoke dome or skylight fixtures, which have been installed, are not considered covers for the purpose of this section unless they meet the strength requirements of paragraph (d)(1) of this section.

(e) *Custody of fall protection.* Fall protection provided by the steel erector shall remain in an area to be used by other trades after the steel erection activity has been completed only if the controlling contractor or its authorized representative:

(1) Has directed the steel erector to leave the fall protection in place; and

(2) Has inspected and accepted control and responsibility of the fall protection prior to authorizing persons other than steel erectors to work in the area.

§ 1926.761 Training.

The following provisions supplement the requirements of § 1926.21 regarding the hazards addressed in this subpart.

(a) *Training personnel.* Training required by this section shall be provided by a qualified person(s).

(b) *Fall hazard training.* The employer shall provide a training program for all employees exposed to fall hazards. The program shall include training and instruction in the following areas:

(1) The recognition and identification of fall hazards in the work area;

(2) The use and operation of perimeter safety cable systems, personal fall arrest systems, fall restraint (positioning device) systems, safety net systems, controlled decking zones and other protection to be used;

(3) The correct procedures for erecting, maintaining, disassembling, and inspecting the fall protection systems to be used;

(4) The procedures to be followed to prevent falls to lower levels and through or into holes and openings in walking/working surfaces and walls; and

(5) The fall protection requirements of § 1926.760.

(c) *Special training programs.* In addition to the training required in paragraphs (a) and (b) of this section, the employer shall provide special training to employees engaged in the following activities.

(1) *Multiple lift rigging procedure.* The employer shall ensure that each employee who performs multiple lift rigging has been provided training in the following areas:

(i) The nature of the hazards associated with multiple lifts; and

(ii) The proper procedures and equipment to perform multiple lifts required by § 1926.753(c).

(2) *Connector procedures.* The employer shall ensure that each connector has been provided training in the following areas:

(i) The nature of the hazards associated with connecting; and

(ii) The establishment, access, proper connecting techniques and work practices required by §§ 1926.760(b) and 1926.756(c).

(3) *Controlled decking zone procedures.* Where CDZs are being used, the employer shall ensure that each employee has been provided training in the following areas:

(i) The nature of the hazards associated with work within a controlled decking zone; and

(ii) The establishment, access, proper installation techniques and work practices required by §§ 1926.760(c) and 1926.754(e).

Note to Appendices to Subpart R: The following appendices to subpart R of this part serve as non-mandatory guidelines to assist employers in complying with the appropriate requirements of subpart R of this part.

Appendix A to Subpart R—Guidelines for Establishing the Components of a Site-Specific Erection Plan: Non-Mandatory Guidelines for Complying With § 1926.752(d)

(a) *General.* This appendix serves as a guideline to assist employers who elect to develop a site-specific erection plan in accordance with § 1926.752(d) with alternate means and methods to provide employee protection in accordance with §§ 1926.752(d), 1926.753(a)(5), 1926.757(a)(3) and 1926.757(e)(4)(i).

(b) *Development of a site-specific erection plan.* Pre-construction conference(s) and site inspection(s) are held between the erector and the controlling contractor, and others such as the project engineer and fabricator before the start of steel erection. The purpose of such conference(s) is to develop and review the site-specific erection plan that will meet the requirements of this section.

(c) *Components of a site-specific erection plan.* In developing a site-specific erection plan, a steel erector considers the following elements:

(1) The sequence of erection activity, developed in coordination with the controlling contractor, that includes the following:

(i) Material deliveries:

(ii) Material staging and storage; and

(iii) Coordination with other trades and construction activities.

(2) A description of the crane and derrick selection and placement procedures, including the following:

(i) Site preparation;

(ii) Path for overhead loads; and

(iii) Critical lifts, including rigging supplies and equipment.

(3) A description of steel erection activities and procedures, including the following:

(i) Stability considerations requiring temporary bracing and guying;

(ii) Erection bridging terminus point;

(iii) Anchor bolt notifications regarding repair, replacement and modifications;

(iv) Columns and beams (including joists and purlins);

(v) Connections;

(vi) Decking; and

(vii) Ornamental and miscellaneous iron.

(4) A description of the fall protection procedures that will be used to comply with § 1926.760.

(5) A description of the procedures that will be used to comply with § 1926.759.

(6) A description of the special procedures required for hazardous non-routine tasks.

(7) A certification for each employee who has received training for performing steel erection operations as required by § 1926.761.

(8) A list of the qualified and competent persons.

(9) A description of the procedures that will be utilized in the event of rescue or emergency response.

(d) *Other plan information.* The plan:

(1) Includes the identification of the site and project; and

(2) Is signed and dated by the qualified person(s) responsible for its preparation and modification.

Appendix B TO Subpart R—Acceptable Test Methods for Testing Slip-Resistance of Walking/Working Surfaces (§ 1926.754(c)(3)) Non-mandatory Guidelines for Complying With § 1926.754(c)(3).

The following references provide acceptable test methods for complying with the requirements of § 1926.754(c)(3).

- Standard Test Method for Using a Portable Articulated Strut Slip Tester (PAST) (ASTM F1678–96)
- Standard Test Method for Using a Variable Incidence Tribometer (VIT) (ASTM F1679–96)

BILLING CODE 4510–26–P

Appendix C to Subpart R—Illustrations of Bridging Terminus Points: Non-Mandatory Guidelines for Complying With § 1926.757(c)(3)

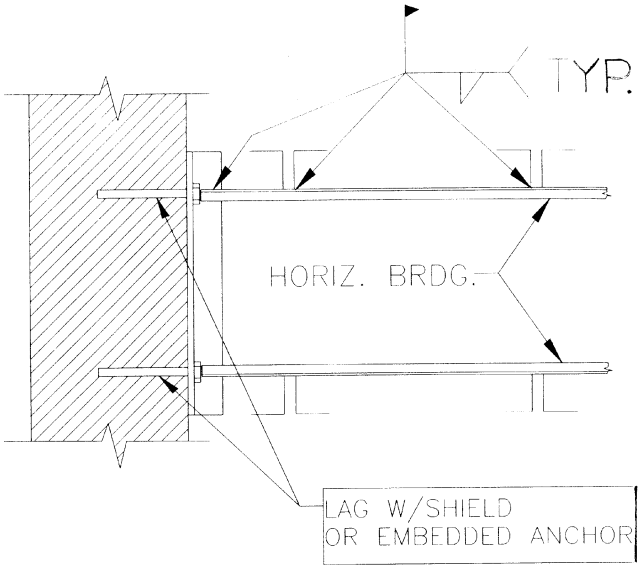

HORIZONTAL BRIDGING TERMINUS AT WALL

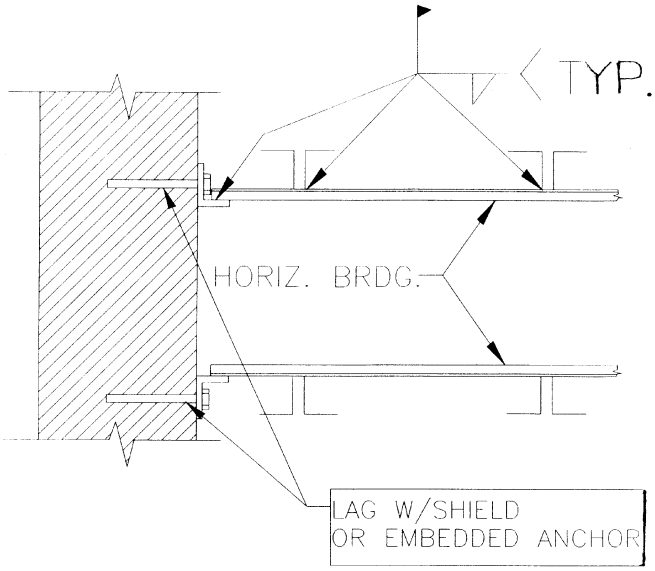

HORIZONTAL BRIDGING TERMINUS AT WALL

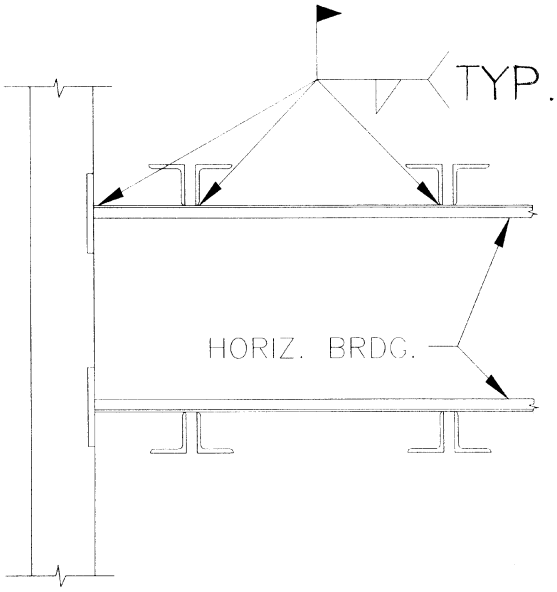

HORIZONTAL BRIDGING TERMINUS AT PANEL WALL

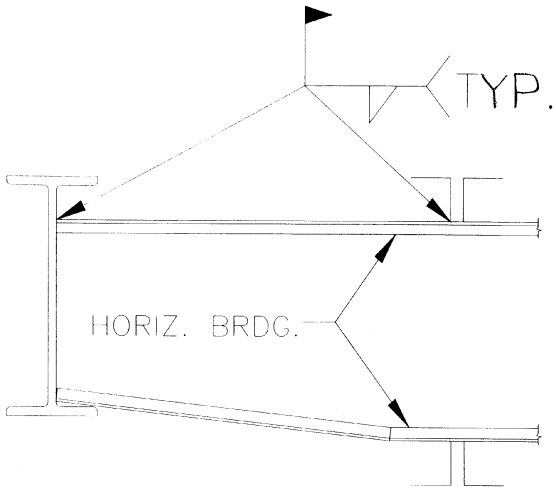

HORIZONTAL BRIDGING TERMINUS AT STRUCTURAL SHAPE

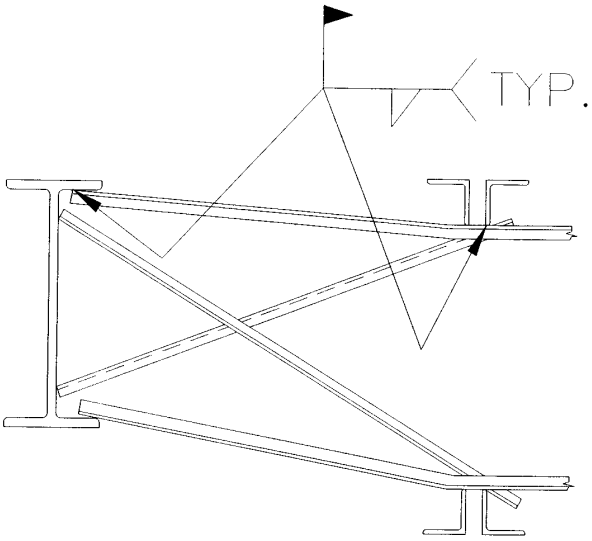

HORIZONTAL BRIDGING TERMINUS AT STRUCTURAL SHAPE WITH OPTIONAL "X-BRIDGING"

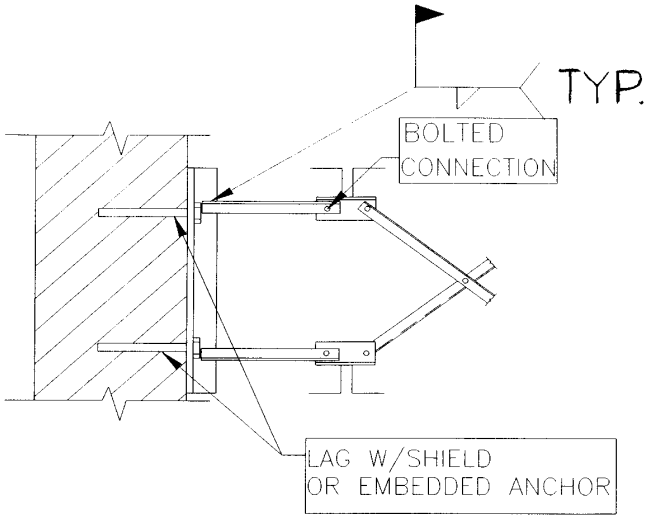

BOLTED DIAGONAL BRIDGING TERMINUS AT WALL

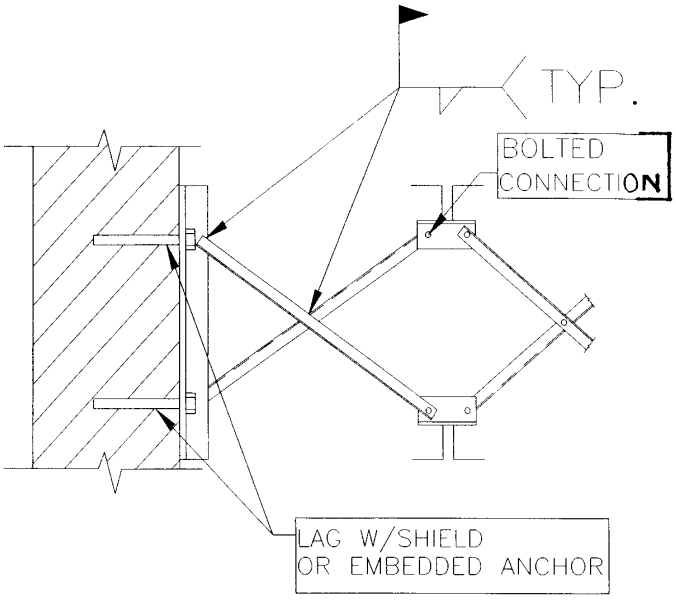

BOLTED DIAGONAL BRIDGING TERMINUS AT WALL

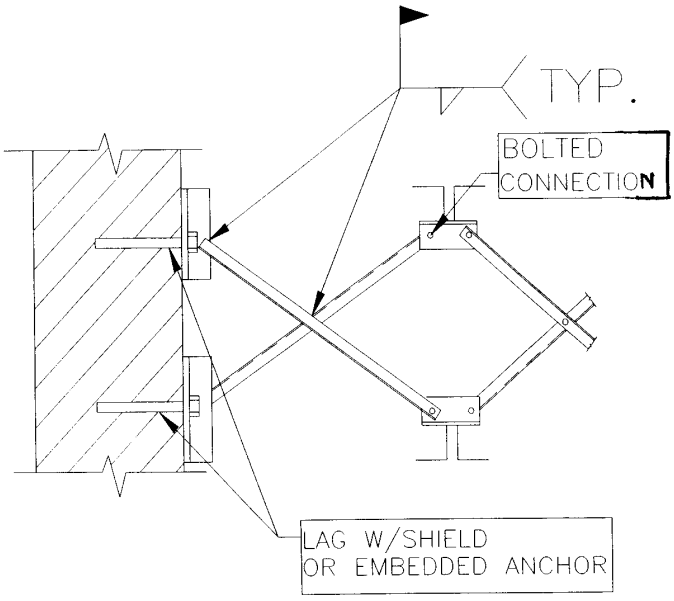

BOLTED DIAGONAL BRIDGING TERMINUS AT WALL

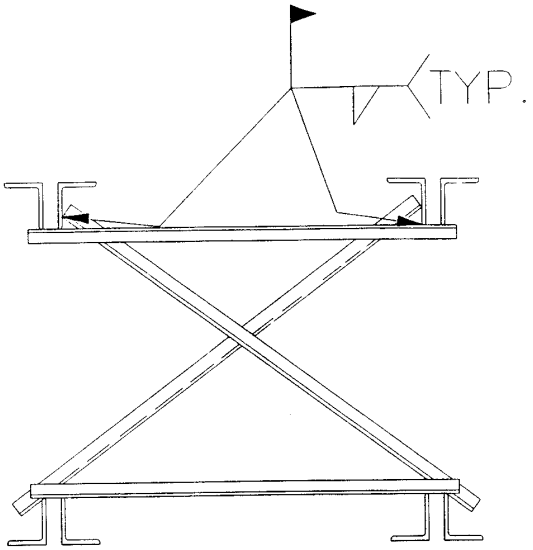

JOISTS PAIR BRIDGING TERMINUS POINT

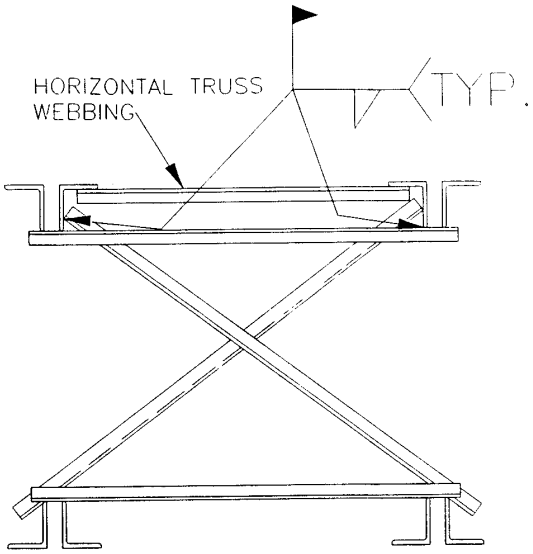

JOISTS PAIR BRIDGING TERMINUS POINT W/HORIZ. TRUSS

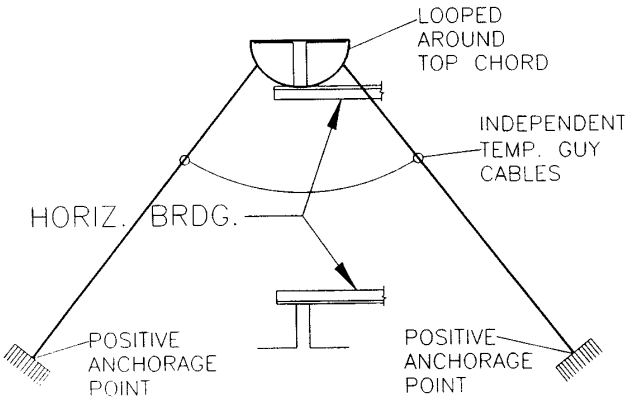

HORIZONTAL BRIDGING TERMINUS POINT SECURED BY TEMP. GUY CABLES

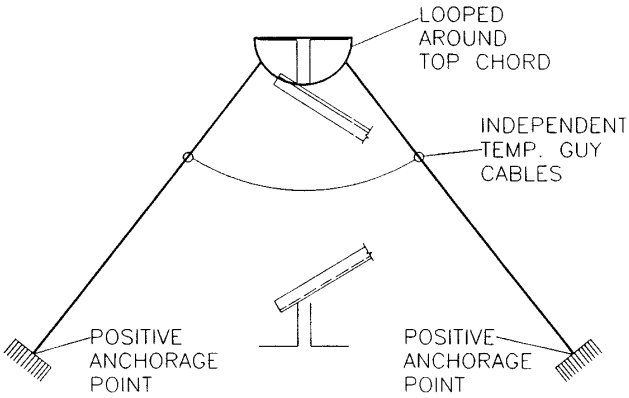

DIAGONAL BRIDGING TERMINUS POINT SECURED BY TEMP. GUY CABLES

BILLING CODE 4510–26–C

Appendix D to Subpart R—Illustration of the use of Control Lines to Demarcate Controlled Decking Zones (CDZs): Non-Mandatory Guidelines for Complying With § 1926.760(c)(3)

(1) When used to control access to areas where leading edge and initial securement of metal deck and other operations connected with leading edge work are taking place, the controlled decking zone (CDZ) is defined by a control line or by any other means that restricts access.

(i) A control line for a CDZ is erected not less than 6 feet (1.8 m) nor more than 90 feet (27.4 m) from the leading edge.

(ii) Control lines extend along the entire length of the unprotected or leading edge and are approximately parallel to the unprotected or leading edge.

(iii) Control lines are connected on each side to a guardrail system, wall, stanchion or other suitable anchorage.

(2) Control lines consist of ropes, wires, tapes, or equivalent materials, and supporting stanchions as follows:

(i) Each line is rigged and supported in such a way that its lowest point (including sag) is not less than 39 inches (1.0 m) from the walking/working surface and its highest point is not more than 45 inches (1.3 m) from the walking/working surface.

(ii) Each line has a minimum breaking strength of 200 pounds (90.8 kg).

Appendix E to Subpart R—Training: Non-Mandatory Guidelines for Complying With § 1926.761

The training requirements of § 1926.761 will be deemed to have been met if employees have completed a training course on steel erection, including instruction in the provisions of this standard, that has been approved by the U.S. Department of Labor Bureau of Apprenticeship.

Appendix F to Subpart R—Installation of Perimeter Safety Cables: Non-Mandatory Guidelines for Complying with § 1926.756(f) To Protect the Unprotected Side or Edge of a Walking/Working Surface.

In multi-story structures, the project structural engineer of record (SER) may facilitate the ease of erecting perimeter safety cables, where structural design allows, by placing column splices sufficiently high so as to accommodate perimeter safety cables located at 42–45 inches above the finished floor. The SER may also consider allowing holes to be placed in the column web, when the column is oriented with the web perpendicular to the structural perimeter, at 42–45 inches above the finished floor and at the midpoint between the finished floor and the top cable. When holes in the column web are allowed for perimeter safety cables, the column splice must be placed sufficiently high so as not to interfere with any attachments to the column necessary for the column splice. Column splices are recommended to be placed at every other or fourth levels as design allows. Column splices at third levels are detrimental to the erection process and should be avoided if possible.

[FR Doc. 98–21112 Filed 8–12–98; 8:45 am]

BILLING CODE 4510–26–P

federal register

Thursday
August 13, 1998

Part III

Nuclear Regulatory Commission

10 CFR Parts 20, 32 and 35

Medical Use of Byproduct Material; Proposed Revision

10 CFR Chapter I

Medical Use of Byproduct Material; Draft Policy Statement; Proposed Rules

NUCLEAR REGULATORY COMMISSION

10 CFR Parts 20, 32 and 35

RIN 3150–AF74

Medical Use of Byproduct Material; Proposed Revision

AGENCY: Nuclear Regulatory Commission.

ACTION: Proposed rule.

SUMMARY: The Nuclear Regulatory Commission (NRC) is proposing a revision of its regulations governing the medical use of byproduct material. The proposed rule is one component of the Commission's overall program for revising its regulatory framework for medical use. The overall goals of this program are to focus NRC's regulations on those medical procedures that pose the highest risk to workers, patients, and the public, and to structure its regulations to be risk-informed and more performance-based, consistent with the NRC's ''Strategic Plan for Fiscal Year 1997–Fiscal Year 2002.'' A notice in this issue of the **Federal Register** announcing the Commission's proposed revision of its 1979 ''Medical Use Policy Statement'' for public comment is published elsewhere.

DATES: The comment period expires November 12, 1998. Comments received after this date will be considered if it is practical to do so, but the Commission is only able to ensure consideration of comments received on or before this date.

ADDRESSES: Comments may be sent to: Secretary, U.S. Nuclear Regulatory Commission, Washington, DC 20555–0001, Attention: Rulemakings and Adjudications Staff.

Deliver comments to: One White Flint North, 11555 Rockville Pike, Rockville, Maryland 20852, between 7:30 am and 4:15 pm on Federal workdays.

Copies of comments received may be examined at: NRC Public Document Room, 2120 L Street, NW. (Lower Level), Washington, DC.

You may also provide comments via the NRC's interactive rulemaking web site through the NRC home page (http://www.nrc.gov). From the home page, select ''Rulemaking'' from the tool bar. The interactive rulemaking website can then be accessed by selecting ''New Rulemaking Website.'' This site provides the ability to upload comments as files (any format), if your web browser supports that function. For information about the interactive rulemaking web site, contact Ms. Carol Gallagher, (301) 415–5905; e-mail CAG@nrc.gov.

FOR FURTHER INFORMATION CONTACT: Catherine Haney, Office of Nuclear Material Safety and Safeguards, Nuclear Regulatory Commission, Washington, DC 20555–0001, (301) 415–6825, e-mail CXH@nrc.gov or Diane Flack, Office of Nuclear Material Safety and Safeguards, Nuclear Regulatory Commission, Washington, DC 02555–0001, (301) 415–5681, e-mail DSFI@nrc.gov.

SUPPLEMENTARY INFORMATION:

I. Background
II. Petition for Rulemaking
Ill. Discussion and Input to Proposed Rule
IV. Discussion of Text of Proposed Rule
V. Coordination with the Advisory Committee on Medical Uses of Isotopes
VI. Coordination With NRC Agreement States
VII. Consistency with Medical Policy Statement
VIII. Implementation
IX. Issues of Compatibility for Agreement States
X. Finding of No Significant Environmental Impact: Availability
XI. Paperwork Reduction Act Statement
XII. Regulatory Analysis
XIII. Regulatory Flexibility Analysis
XIV. Backfit Analysis

I. Background

Use of Byproduct Material in Medicine

Since 1946, growth in the medical applications of radioisotopes has been very rapid as their usefulness has become more apparent in diagnosis, therapy, and medical research. Current medical procedures employ a number of radionuclides in a wide variety of chemical and physical forms. Nuclear medicine procedures for diagnostic and therapeutic applications involve the internal administration of radiolabeled tracers. Administration of the radiolabeled tracers, known as radiopharmaceuticals, may be performed by intravenous injection, inhalation, or oral ingestion. Diagnostic nuclear medicine in most cases involves imaging agents used for the delineation and localization of organ tissues by scintigraphy (e.g., technetium-99m hydroxymethylene diphosphonate used as a bone seeking radiopharmaceutical). Organ function may be determined by quantifying the accumulation of radiopharmaceuticals in organs of interest (e.g., iodine-131 uptake studies used to assess thyroid function). Therapeutic nuclear medicine may use various radiopharmaceuticals for the treatment of disease by selective absorption or concentration (e.g., iodine-131 used to treat thyroid cancer). Other therapeutic applications may involve the use of radiopharmaceuticals in colloidal suspensions for the treatment of malignant tumors (e.g., phosphate-32 infusion for treatment of peritoneal or pleural effusions associated with malignant tumors).

Since the early 1900s, radiation therapy has become one of the major modalities of treatment in the management of neoplastic disease, generally referred to as cancer. Radiation therapy may also be used as a palliative agent in the medical treatment process. The objective of conventional radiation therapy using a teletherapy sealed source is to deliver a precisely measured dose of radiation to a defined tumor volume. This is usually accomplished by delivering a dose in daily increments over several weeks. External beam radiation therapy has evolved using innovative technology that has led to the development of the gamma stereotactic radiosurgery device used for treatment of precisely defined intracranial targets (e.g., brain tumors and arteriovenous malformations).

Brachytherapy uses a variety of smaller sealed sources for localized treatment of cancer. Typically the sealed sources are either inserted in a cavity (e.g., cesium-137 sources used for intracavitary treatment of cervical cancer) or implanted in tissue (e.g., iodine-125 seeds used for interstitial treatment of prostate cancer). Various remote afterloading devices have been developed for low, medium, and high dose-rate brachytherapy treatments.

State and Federal Regulations

Byproduct material or radiation from byproduct material is regulated by either State or Federal Laws. The NRC regulates the administration of byproduct material or radiation from byproduct material in 20 States, the District of Columbia, the Commonwealth of Puerto Rico, and various territories of the United States. There are approximately 1900 NRC licenses authorizing the medical use of byproduct material under 10 CFR Part 35, ''Medical Uses of Byproduct Material.'' Thirty States, known as Agreement States, have entered into an agreement with the NRC to regulate the use of byproduct material (as authorized by section 274 of the Atomic Energy Act). These States issue licenses and currently regulate about 5000 institutions, e.g., hospitals, clinics, or physicians in private practice. The use of byproduct material represents only a small fraction of all medical uses nationwide of radionuclides or sources of radiation, e.g. x-ray.

Revision of NRC's Regulatory Program

NRC's medical use program includes use of byproduct material in medical diagnosis, therapy, and research. NRC's requirements for medical licensees are

described in 10 CFR Part 35. Approximately eleven million patients annually undergo medical procedures involving byproduct materials.

The Commission examined the issues surrounding its medical use program in detail during a 1993 internal senior management review, a 1996 independent external review by the National Academy of Sciences, Institute of Medicine, and the Commission's Strategic Assessment and Rebaselining Initiative (SA). In particular, medical oversight was addressed in the SA Direction-Setting Issue Paper Number 7 (DSI 7) (released September 16, 1996). In September 1997, the Commission issued its ''Strategic Plan'' (NUREG–1614, Vol. 1) which stated that its goal in regulating nuclear materials safety is to ''prevent radiation-related deaths or illnesses due to civilian use of source, byproduct, and special nuclear materials.''

In its Staff Requirements Memorandum (SRM)—COMSECY–96–057, ''Materials/Medical Oversight (DSI 7),'' dated March 20,1997, the Commission stated that it supported continuation of the ongoing medical use regulatory program with improvements, decreased oversight of low-risk activities, and continued emphasis on high-risk activities. This SRM also directed the NRC staff to revise Part 35, associated guidance documents, and, if necessary, the Commission's 1979 Medical Use Policy Statement (44 FR 8242; February 9, 1979). The Commission's SRM specifically directed the restructuring of Part 35 into a risk-informed, more performance-based regulation. In addition, the Commission expressed its support for the use of the Advisory Committee on the Medical Use of Isotopes (ACMUI) and professional medical organizations and societies in the revision of Part 35 and the medical policy statement. The Commission specifically directed the NRC staff to ''consider a rulemaking process that provides more opportunity for input from potentially affected parties than is provided by the normal notice and comment rulemaking process but would be less consumptive of resources and time than the process recently used in the development of NRC's rule on radiological criteria for license termination.''

During development of the rule and associated guidance, as well as during the review of the Medical Use Policy Statement, the Commission considered the following issues:

(1) Focusing Part 35 on those procedures that pose the highest risk;

(2) Regulatory oversight alternatives for diagnostic procedures that are consistent with the lower overall risk of these procedures;

(3) The best way to capture not only relevant safety-significant events, but also precursor events;

(4) Changing the nomenclature from ''misadministration'' to ''medical event'' or comparable terminology;

(5) Redesigning Part 35 so that regulatory requirements for new treatment modalities can be incorporated in a timely manner;

(6) Revising the requirement for a quality management program (10 CFR 35.32) to focus on those requirements that are essential for patient safety; and

(7) The viability of using or referencing available industry guidance and standards, within Part 35 and related guidance, to the extent that they meet NRC's needs.

The proposed rule that would revise Part 35 has been developed in response to these issues and concerns.

The Commission, in its SRM of June 30, 1997, ''SECY–97–115—''Program for Revision of 10 CFR Part 35, 'Medical Uses of Byproduct Material' and Associated **Federal Register** notice,'' approved the NRC staff's proposed plan for the revision of Part 35. The **Federal Register** notice, ''Medical Use of Byproduct Material: Issues and Request for Public Input'' (62 FR 42219–42220; August 6, 1997), solicited early public input on the proposed rulemaking.

The NRC staff implemented the approved plan using an approach involving public Working and Steering Group meetings, with significant opportunities for input from the public, potentially affected parties, the ACMUI, and professional medical organizations. Publicly noticed Working and Steering Group meetings were held in August, September, and December 1997, and in January, February, March, and April 1998. During the Working and Steering Group meetings, the groups identified significant crosscutting issues associated with the rulemaking. These issues included patient notification, precursor events, Radiation Safety Committee, quality management program, and training and experience for authorized users. Rulemaking alternatives were developed for these crosscutting issues and were made available on the Internet and in the NRC's Public Document Room for comment. These alternatives were discussed with (1) the ACMUI at its September 1997 meeting, (2) the public at facilitated public workshops held in Philadelphia, PA, in October and in Chicago, IL, in November 1997 (discussed below), (3) State regulators at a publicly noticed workshop that was conducted during the October 1997 All Agreement States Meeting, and (4) meetings of medical professional societies.

In addition to the proposed revision of Part 35, the Commission is publishing for public comment, in a separate **Federal Register** notice, a proposed revision of its 1979 policy statement on the Medical Use of Byproduct Material (44 FR 8242; February 9, 1979). The proposed revision of the medical policy statement is another component of the Commission's overall program for revising its regulatory framework for medical use, including its regulations in Part 35. The proposed revision of Part 35 is consistent with the proposed revision of the Medical Use Policy Statement (MPS) and is generally consistent with the current MPS (see Section VII of the **SUPPLEMENTARY INFORMATION** section of this document).

Workshops

The Commission believes that it is important for interests affected by the medical use rulemaking to not only have an early opportunity to comment on the rulemaking issues, but also to have an opportunity to discuss the rulemaking with one another and the agency. Accordingly, the Commission convened two public workshops in which the interests that maybe affected by the rulemaking had the opportunity to discuss the rulemaking issues. Although the workshops were intended to foster a clearer understanding of the positions and concerns of the affected interests, as well as to identify areas of agreement or disagreement, it was not the intent of the workshop process to develop a consensus agreement of the participants on rulemaking issues.

In order to have a manageable discussion, the number of invited participants in the roundtable discussions at each workshop was limited. The Commission, through a facilitator for each workshop, attempted to insure participation by a broad spectrum of interests that may be affected by the rulemaking. These interests included nuclear medicine physicians, physician specialists such as cardiologists and radiologists, medical physicists, medical technologists, radiation safety officers, nurses, medical education and certification organizations, radiopharmaceutical interests, hospital administrators, patients rights advocates, Agreement States, Federal agencies, and experts on risk analysis. Other members of the public were invited to attend and had the opportunity to comment on the rulemaking issues and the workshop

discussions at periodic intervals during the workshops.

The workshops had a common, predefined agenda focused primarily on alternatives for major (''crosscutting'') issues, some with draft regulatory text. The workshop format was sufficiently flexible to allow for the introduction of additional related issues that participants wanted to raise. The workshop commentary was transcribed and summarized in ''Summary of Discussion: Facilitated Public Workshop on Revisions to 10 CFR Part 35 Held in Philadelphia, Pennsylvania, on October 28–30, 1997'' (April 17, 1998) and ''Summary of Discussion: Facilitated Public Workshop on Revisions to 10 CFR Part 35 Held in Chicago, Illinois, on November 12–14, 1997'' (April 17, 1998). The summary documents are available for inspection at the NRC Public Document Room, 2120 L Street NW. (Lower Level), Washington, DC. Single copies of the summary documents are available as indicated in the For Further Information Contact section of this document. A brief summary of the participant's positions on the major crosscutting issues associated with this rulemaking is provided in Section Ill of the **SUPPLEMENTARY INFORMATION** section of this document.

The Commission plans to hold three public workshops during the formal comment period to facilitate public comments on the proposed rulemaking. A notice for these workshops was published in the **Federal Register** on July 24, 1998 (63 FR 39763).

II. Petition for Rulemaking

The Commission has incorporated into this rulemaking the resolution of a Petition for Rulemaking (PRM) filed by the University of Cincinnati dated April 7, 1996 (PRM 20–24), because of its pertinence to Part 35. On June 21, 1996 (61 FR 31874), the NRC published a notice of receipt and a request for comment on this petition for rulemaking.

The petitioner requested that the NRC amend 10 CFR 20.1301, ''Dose limits for individual members of the public'' to:

(1) Provide medical licensees the discretion to permit those visitors determined by the physician to be necessary for the emotional or physical support of the patient to receive up to 5 mSv (0.5 rem) (e.g., parents of very young radiation therapy patients, close family members of elderly patients, or other persons who could provide emotional support to the patient);

(2) Exclude pregnant women and individuals younger than 18 years of age from receiving a dose in excess of 1 mSv (0.1 rem); and

(3) Document compliance by issuing radiation dose monitoring devices (i.e., pocket dosimeter, film badge, TLD, or electronic dosimeter) to each specified visitor.

In response to the request for public comments, the Commission received comments from four members of the general public. All commenters agreed with the petition. One of the commenters suggested that the previous 5 mSv (0.5 rem) dose limit for the general public be reinstated for a ''specific'' public and, under unusual circumstances, also permit the authorized user to authorize even higher exposure provided the latter does not ''receive more radiation than a radiation worker.'' Another commenter suggested permitting the authorized user to authorize even higher exposure provided it did not exceed the occupational dose limit of 50 mSv (5 rem).

Although a 50 mSv (5 rem) dose limit for adult visitors exposed to radionuclide therapy patients is consistent with the recommendations of the National Council on Radiation Protection and Measurements (NCRP Commentary No. 11, Dose Limits for Individuals Who Receive Exposure From Radionuclide Therapy Patients, February 28, 1995), this suggestion is not consistent with release of patients in accordance with § 35.75, or with the approach to protection of the public in 10 CFR Part 20. For this reason, the NRC decided not to adopt the suggested 50 mSv (5 rem) dose limit.

The NRC reviewed the petitioner's request and comments received on the petition and believes there is merit in granting the petition in part as discussed in detail later. This proposed rule responds to the petition by amending 10 CFR Part 20 to allow the licensee the discretion to permit visitors to receive up to 5 mSv (0.5 rem) in a year from exposure to hospitalized radiation patients.

III. Discussion and Input to Proposed Rule

The program for revising Part 35 and the associated guidance documents has provided more opportunity for input from potentially affected parties (the medical community and the public) than is provided by the typical notice and comment rulemaking process. Early public input was solicited through several different mechanisms: requesting public input through **Federal Register** notices; holding open meetings of the government groups developing the revised rule language; meeting with medical professional societies and boards; putting background documents, options for the more significant regulatory issues associated with the rulemaking, and alternatives for revising the 1979 Medical Use Policy Statement on the Internet; and convening public workshops. The NRC received approximately 330 letters providing input to the rulemaking process. The input received from the public during the development of the proposed rulemaking is categorized and summarized below, according to the significant regulatory issues that were identified very early in the rulemaking process.

A. Training and Experience

1. Facilitated Workshops

The issue of training and experience for authorized users generated the most discussion among workshop participants. Discussion of this topic was organized into segments that addressed ''key current problems or advantages identified by participants''; certain ''crosscutting'' training and experience issues (including such questions as the role a professional degree, medical specialty certification, or testing should play in qualifying an authorized user); and various specific alternatives (developed by the Part 35 Working Group) for training and experience necessary to qualify a physician as an authorized user.

Based on specific questions posed to participants, certain issues emerged as important in determining the necessary training and experience for qualifying as an authorized user. For instance, some participants believed that the current requirements are unrealistically stringent. Other participants maintained that training and experience can be varied, based upon the degree of risk posed by a specific modality. (However, participants did not necessarily agree on how to rank various modalities based on risk.) One question raised was whether the training and experience requirements should be different for physicians already in practice, than for those physicians who are just starting out. Certain participants viewed Commission specification of clinical training and experience requirements as a serious intrusion into the practice of medicine and; therefore, suggested that the term ''clinical training and experience'' should be replaced with the term ''practical training and experience.'' The latter would cover safe handling of radioactive materials (i.e., such topics as: safe delivery of radionuclides to patients; time, distance, and shielding; use of a dose

calibrator; assessing contamination; decontaminating areas; half-lives of radionuclides; and consequences of contamination). However, some therapy practitioners supported the requirement for clinical experience as part of training and experience. Another suggested approach to establishing training and experience requirements would be to have different requirements for physicians who use radionuclides for very limited purposes (i.e., cardiology and endocrinology), as opposed to physicians engaged in the general medical use of byproduct material.

The range of options for a physician to become an authorized user that was discussed at the workshops included—

(1) Status quo (i.e., a physician who is certified in any one of a number of medical specialities, or has had a set number of hours of classroom and laboratory training and supervised clinical experience, or has completed an approved training program that included classroom and laboratory training, work experience, and supervised clinical experience);

(2) Medical speciality certification, plus a specified number of hours of training and experience;

(3) Medical specialty certification plus a specified number of hours of training and passing an examination;

(4) Possessing an M.D. degree;

(5) Passing an examination focused on radiation safety; and

(6) Passing an examination focused on radiation safety and having specified clinical experience.

The options were primarily analyzed in terms of therapeutic versus diagnostic uses of byproduct material. Many participants involved in therapeutic medical uses supported the status quo requirements for such uses (generally requiring either medical speciality board certification or a specified number of hours of classroom and laboratory training) because such requirements have served patients and the public well. They maintained that board certification ensures the appropriate level of training and experience and were cautious about any change that could diminish assurance of competency. However, some proponents of the status quo would accept the use of medical specialty boards other than those currently listed in Part 35. Some participants also felt that clinical experience in handling radionuclides and patient cases, especially across a broad range of developing therapy, is crucial. Representatives of diagnostic uses of byproduct materials asserted that the status quo effectively prohibits some medical practitioners from using byproduct materials which they could safely use if the training requirements were decreased. They believe that an examination component of the training and experience requirements is extremely important in setting a standard for authorized users. Some diagnostic users recommended that about 150 hours of didactic training and associated clinical experience would be sufficient.

The discussion of training and experience requirements addressed the viewpoint that all professionals involved in handling radionuclides, including medical physicists, authorized nuclear pharmacists, nurses, technologists, dosimetrists, and physician's assistants, should be subject to the training and experience requirements. Some participants supported degree requirements, such as a master's degree in health physics. Opposition to such a requirement was based on the concept that performance criteria, rather than a degree, should be the basis for determining competence for certain positions, such as the Radiation Safety Officer or nuclear technologist. Another viewpoint expressed was that the nuclear medicine technologist, rather than the authorized user physician, should be the focus of training and experience requirements, because the technologist actually handles the radioactive material.

Participants believed that training and experience requirements are essential for ensuring the competency of a Radiation Safety Officer. They generally expressed support for the status quo for training and experience requirements for the Radiation Safety Officer, but questioned whether an authorized user should automatically qualify as a Radiation Safety Officer. Specifically, some participants believed that an authorized user should not also be the Radiation Safety Officer because of ''potential conflicts of interest'' (i.e., the Radiation Safety Officer should not be influenced by the ''administration'' of a facility). Other participants noted that an authorized user physician might be a specialist whose practice includes a limited application of the medical use of byproduct material, and who does not have sufficient training in radiation safety to address problems that might occur. Certain participants believed that it may be appropriate for an authorized user to be a Radiation Safety Officer at a small hospital, even if that authorized user did not have the breadth of training to be a Radiation Safety Officer at a large hospital. A concern of some participants is that there may not be anyone other than the authorized user to assume the responsibility as a Radiation Safety Officer at small community hospitals. In those cases, an authorized user, who is also the Radiation Safety Officer, was seen to be preferable to not having a Radiation Safety Officer.

Workshop participants generally did not question the current training and experience requirements for the Radiation Safety Officer. Some suggested changes for the Radiation Safety Officer's training and experience were discussed, such as varying the training and experience to correspond to the type of license or duties performed by an individual Radiation Safety Officer; to have a ''core competency'' set of requirements (which could be supplemented with additional requirements for modalities posing greater risks); or to substitute a Masters of Science degree for the 200-hour training requirement.

Certain participants involved in ''low-dose'' medical uses concluded that Part 35 should include training and experience for medical physicists. They noted that training and experience requirements should correspond to the duties and responsibilities of the physicist for different modalities (i.e., instrumentation for nuclear medicine, radiation treatment planning, or administration of doses for radiation therapy).

Comments by participants on this issue were favorable regarding training and experience for the authorized nuclear pharmacists. Some participants specifically stated that, based on risk, radiopharmacy training and experience should be handled similarly to other diagnostic modalities.

Training and experience requirements for ancillary personnel, such as technologists, were briefly discussed. Some participants supported training and experience requirements for technologists because the technologists, rather than the physicians, handle the radioactive materials. One participant, a nuclear medicine technologist, indicated that there are already organizations that have established voluntary training and experience requirements for technologist certification. The individual did not believe that these organizations would endorse other exams. The individual also indicated that, if proposed, training for technologists should be risk-based.

2. Agreement State Workshop

Discussions at the Agreement State Workshop focused on whether NRC's training and experience requirements should focus exclusively on the radiation safety aspects of an authorized user's training, leaving issues such as patient selection and reading scans to be part of the ''practice of medicine.''

Workshop participants were divided on this issue. Those answering this question affirmatively believed that NRC should focus on assuring that physicians are capable of safely handling and using byproduct material. One participant indicated that the level of education to demonstrate competence should be uniform regardless of the hazard posed by the material. Other participants believed that, from the patient's perspective, the physician's role goes beyond safety and into areas such as patient selection and scan interpretation.

One member of the public argued that NRC and Agreement States should require physicians to master quantitative radiation protection science before permitting them to become authorized users. The individual also believed that NRC and the Agreement States should rely solely on physician practice privilege committees, State Boards of Medicine, and the Joint Commission on the Accreditation of Health Care Organizations to determine the qualifications of physicians to practice nuclear medicine.

The Agreement States were concerned about the resources needed to develop and validate examinations. One participant stated that creating and validating a new exam would be costly in comparison to seeking out existing exams that were validated and acceptable to the NRC.

Training and experience requirements for ancillary personnel, such as technologists, were discussed. A representative of the nuclear medicine technologist profession stated that the role of the technologist entailed more than the safe handling of radioactive materials. The role of the technologist was to provide the physician with the information needed to treat the patient. The individual went on to indicate that the success of the entire diagnostic process correlated with the education and training of the technologist and physician. The individual indicated that groups currently certifying technologists support certification for technologists and State legislation mandating that technologists be licensed. The individual also indicated that these certifying groups did not favor NRC setting standards for training and experience for technologists because the NRC does not have the experience necessary to determine what the training requirements for technologists should be.

One workshop member confirmed that a number of States require that technologists be certified. The participant noted that the Conference of Radiation Control Program Directors (CRCPD) was planning on discussing minimum training and experience qualification criteria for technologists. These requirements would be added to the Suggested State Regulations.

3. Advisory Committee on Medical Uses of Isotopes (ACMUI)

Training and experience requirements have been discussed on numerous occasions with the ACMUI. The ACMUI most recently discussed training and experience for authorized users, authorized medical physicists, authorized nuclear pharmacists, and Radiation Safety Officers at its March 1–2, 1998, meeting. The ACMUI agreed with the Commission's proposed general approach to training and experience, i.e., delete reference in the rule to the speciality boards names, require preceptor forms, and require that competency be demonstrated by successful completion of an examination. Members debated whether it is possible or prudent, with respect to authorized user physician training, to separate the hours required for radiation safety training from the entire clinical training period.

The ACMUI unanimously recommended that the current training requirements for authorized users of sealed sources and devices for therapeutic applications (proposed §§ 35.400 and 35.600) be maintained. Specifically, they recommended retaining the 3-year clinical training in an accredited program as an alternative to medical speciality board certification. The ACMUI agreed with the views expressed by members of the radiation oncology professional societies who made formal presentations at the March 1998, meeting. Specifically, they agreed that the current requirements for authorized users of brachytherapy and therapeutic medical devices should be retained because of the risk associated with use of these modalities and because radiation safety training and clinical competence are intertwined for uses of these devices.

The ACMUI unanimously recommended that the training requirements for authorized users of unsealed byproduct material for diagnostic uses (proposed §§ 35.100 and 35.200) be reduced to the levels proposed by the NRC staff (120 hours in a structured educational program). The ACMUI did not reach a consensus on the training requirements for authorized users of unsealed byproduct material for therapeutic uses. The NRC staff recommended reducing the training requirements to a 120-hour structured educational program and limited casework. Some members of the ACMUI were concerned that training for these uses should be addressed in a manner similar to that used for the therapeutic uses of sealed sources. Finally, they unanimously agreed with NRC staff's recommendation for training requirements for authorized nuclear pharmacists (700 hours in a structured educational program) and medical physicists (Masters of Science degree and 2 years).

4. Written Comments

Authorized Users Training and Experience Requirements for Unsealed Byproduct Material

The Commission received numerous comments from professional societies and individual physicians on the training and experience requirements for use of unsealed byproduct material.

Many professional societies, as well as individual physicians, were concerned that a reduction in training hours, as proposed in a January 20, 1998, ''strawman'' version of the proposed rule, would not provide adequate training and might result in approval of poorly trained practitioners. They believe that it is impossible to distinguish between safety and competence. They indicated that the current requirement for 500 hours of clinical experience is an important ''patient safety regulation.'' Some professional organizations recommended that the Commission maintain the current training requirements in this area for authorized users, but also recommended that the training be provided only in programs accredited or approved by the American Council on Graduate Medical Education. Others believed that training and experience should be developed, administered, and monitored by medical speciality organizations with experience in clinical radiation-related technologies.

One professional society supported the reduction in training hours. This organization recommended that physicians, who are not certified by an NRC-approved medical speciality board, be required to pass an examination and to obtain a written certification from a preceptor that indicates that the individual is able to function independently on all aspects of radiation safety.

Another society suggested that competence in radiation safety be demonstrated in a performance-based manner, e.g., NRC would not specify a specific number of hours, but would assess competency through a comprehensive examination.

One society urged the Commission to maintain the current training and experience requirements for use of byproduct material to treat hyperthyroidism or thyroid carcinoma. This organization opposed the proposal in the ''strawman'' proposed rule to increase the number of training hours needed to use material to treat hyperthyroidism or thyroid carcinoma and opposed the requirement for an examination. This organization believed that the proposed increase in training and experience requirements would have a detrimental effect for patient care, such as referral of patients to other specialists using less desirable alternative treatments.

One commenter indicated that a minimum of 120 hours of classroom and laboratory training and 240 hours supervised practical experience, or a 3-month training program in nuclear medicine, was appropriate for diagnostic nuclear medicine.

Training and Experience for Use of Sealed Sources in Therapy

The NRC received approximately 330 letters providing input to the rulemaking process. Approximately 90 percent of these comments were from radiation oncologists who feel very strongly that the current training and experience requirements for authorized users of brachytherapy and therapeutic medical devices should be retained because of the high risk associated with use of these modalities and because radiation safety training and clinical competence are intertwined for uses of these devices.

Commenters believed that training and experience requirements should be consistent with that required for certification by the American Board of Radiology (i.e., 3 years of therapeutic radiology and at least 6000 hours of direct clinical experience). If the Commission were to consider other medical speciality boards for certification of physicians seeking approval as authorized users to perform brachytherapy and teletherapy, the training required by those boards should be the same as that required by the American Board of Radiology for certification in therapeutic radiology. Certain comments specifically objected to either an NRC-developed or NRC-approved examination, because that would mean that the standards of the American Board of Medical Specialities and its twenty-four member boards are ''too high.''

Most commenters believed that thorough training in radiation oncology should be required for all physicians seeking to perform applications of ionizing radiation to treat disease. According to certain comments, therapeutic treatments of the heart and brain are high-risk procedures and ''relaxing'' these requirements would not be in the best interest of patients or the medical profession at large. They maintained that training requirements for coronary artery brachytherapy and gamma stereotactic radiosurgery should be the same as those for other brachytherapy and teletherapy modes of treatment, respectively, and not broken into ''tiny site-specific'' modalities with different training requirements.

Other commenters noted that radiation oncologists should be involved, as part of a team with cardiologists and neurosurgeons, in brachytherapy treatment of the heart and use of gamma stereotactic radiosurgery of the brain. Other comments described the ''full complement'' of training for these medical uses as covering radiation biology, radiation physics, and radiation safety.

A professional organization offered criteria for training and credentialling of cardiologists performing brachytherapy involving coronary and vascular interventions. This organization believes that cardiologists should perform intravascular brachytherapy in collaboration with medical physicists, Radiation Safety Officers, and medical dosimetrists.

5. Resolution

The Commission considered all of the input on training and experience that was provided during the development of this rulemaking. On the basis of the public input, the Commission is proposing the following training and experience criteria for authorized users, authorized medical physicists, authorized nuclear pharmacists, and Radiation Safety Officers:

(1) The requirements for training and experience should be risk-informed and focused on radiation safety;

(2) Individuals should complete a structured educational program that consists of didactic training and practical experience;

(3) Specific reference to speciality boards, by name, should be deleted;

(4) Speciality boards will be approved by the Commission or an Agreement State if the board certification process includes all the training and experience requirements associated with the equivalent training pathway;

(5) Preceptors, when required, should certify that individuals have achieved a level of competency sufficient to function independently as an authorized user for the requested use, an authorized medical physicist, an authorized nuclear pharmacist, or a Radiation Safety Officer; and

(6) Individuals should demonstrate sufficient knowledge in radiation safety by passing an examination given by an organization or entity approved by the Commission or an Agreement State.

The Commission believes that training and experience criteria should be risk-informed and focused on radiation safety. In addition, the Commission believes that, by requiring a combination of a structured education program, preceptorship, and examination focused on radiation safety, individuals will be able to safely handle byproduct material. However, it is important to note that an individual's status as an authorized user, authorized medical physicist, authorized nuclear pharmacist, or Radiation Safety Officer means that an individual has met the requirements to handle byproduct material safely and is not an assessment of the individual's clinical or professional competency.

The Commission believes that individuals should complete a structured educational program that consists of didactic training and practical experience. The number of hours and type of training were extensively discussed with the medical societies and speciality boards and have been the primary issue in the public input received on the rulemaking. However, the Commission recognizes that radiation safety training and clinical competency may be intertwined, especially for uses of therapeutic medical devices. Because of the high risk associated with use of sealed sources in therapeutic medical devices, the Commission has not proposed significant changes in the current training requirements for authorized users in this area, with the exception of the training required for the use of strontium-90 eye applicators. Under the proposed rule, authorized users of strontium-90 eye applicators will need to meet the training requirements for authorized users of therapeutic medical devices. The Commission believes this change is warranted in light of the similarity between the use of strontium-90 eye applicators and the use of sealed byproduct material in medical devices and the recent misadministrations involving strontium-90 eye applicators. It is important that the didactic training include courses in radiation physics, dosimetry, and radiation biology so that the authorized users have a clear understanding of what a dose means in terms of radiation damage to the exposed tissue.

The Commission has focused the training requirements for use of unsealed material for diagnostic administrations when a written directive is not required on radiation safety because of the low risk posed by the radionuclides. In doing so, the didactic and practical requirements for authorized users of unsealed byproduct material for diagnostic procedures were significantly reduced.

The didactic and practical requirements for use of unsealed byproduct material when a written directive is required were also reduced because of similarities between the use of unsealed material in a diagnostic setting and use in a therapeutic setting. However, the Commission recognized that the use of both therapeutic unsealed sources and sealed sources involve higher risks and, therefore, retained the requirement for clinical experience.

The proposed rule would delete the current, specific training and experience sections that pertain to treatment of hyperthyroidism and thyroid carcinoma. Under the proposed revision of Part 35, individuals wishing to become authorized users of byproduct material for these medical uses would be required to meet the training requirements that apply to the use of unsealed material for which a written directive is required (§ 35.390). The proposed rule specifies that (1) the structured educational program for these individuals include an additional 40 hours of supervised practical experience; (2) these individuals have experience involving at least five cases for each procedure with radiation safety hazards similar to that use for which the individual is requesting authorized user status; and (3) these individuals pass an examination to demonstrate competency in radionuclide handling techniques applicable to the use of unsealed byproduct material.

The Commission recognizes that this proposed rule change places additional requirements on those individuals that wish to become authorized users of byproduct material for only the treatment of hyperthyroidism and thyroid carcinoma. However, it does expect that many of the practical hours will be obtained concurrently with the casework, therefore lessening the burden on the individuals. The Commission recognizes that there have been very few misadministrations that have occurred in this area (1995 and 1997). However, it believes that this change is consistent with the Commission's general intent to (1) focus training and experience criteria on radiation safety; (2) require that all authorized users have practical experience in the handling of radionuclides; and (3) require that competency be demonstrated by passing an examination.

The Commission believes that any reference, by name, to specialty boards should be deleted from the regulation for two reasons. First, under the current Part 35, in which speciality boards are listed by name, a rulemaking is needed to add new boards or to delete existing boards. This has been a problem with the current Part 35 because on several occasions individuals requesting authorized user or medical physicist status have been certified by a speciality board that is not listed in the regulations. In these cases, NRC has had to evaluate the training of individuals, with the help of the ACMUI, on a case-by-case basis. Secondly, the current rule does not provide for periodic review of certifying boards to determine if any changes have been made in their certifying programs.

The proposed rule would require that specialty boards be approved by the NRC or an Agreement State. A specialty board will be approved by NRC if the certification process includes all of the requirements listed in the equivalent training pathway, i.e., completion of a structured educational program of specific duration that covers specific topics; obtaining a signed preceptor certification; completion of patient casework, if required; and successful completion of an examination on radiation safety. The Commission plans to discuss proposed board approvals with the ACMUI prior to approving the boards. The NRC staff also plans to conduct periodic reviews of approved speciality boards to assure that they continue to meet commitments to NRC. If a board does not meet its previous training and experience commitments, it will be removed from NRC's list of approved boards. A list of approved boards will be maintained on the NRC external website. In addition, the Commission is contemplating noticing the approval of a speciality board in the **Federal Register**.

The Commission is proposing that preceptors, when required, should certify that individuals have achieved a level of competency sufficient to independently function as an authorized user for the use that they are requesting: a medical physicist, an authorized nuclear pharmacist, or a Radiation Safety Officer. In the current Part 35, a preceptorship is only required for authorized nuclear pharmacists. The current preceptors for authorized nuclear pharmacists are only required to attest to the fact that the individual has performed a specified number of cases/treatments. Preceptor forms will be revised to add a warning that 18 U.S.C. Section 1001 Act of June 25, 1948, 62 Stat. 749, makes it a criminal offense to make a willfully false statement or representation to any department or agency of the United States as to any matter within its jurisdiction.

The Commission believes that individuals should demonstrate sufficient knowledge in radiation safety commensurate with the use requested by passing an examination given by an organization or entity approved by the Commission or an Agreement State. The Commission is soliciting specific comment on whether the requirement for an examination to verify competency is warranted, in light of current industry practice. Appendix A of the proposed rule provides the requirements for an examining organization or entity, examination programs, and written examinations. Of particular note is the requirement that procedures be established to ensure that examinations are not given to individuals who have also been instructed by the examining organization in the same subject area. This proposed requirement is consistent with current practices of medical specialty boards and was suggested for inclusion by ACMUI members. The Commission is also soliciting specific public comment on whether this proposed requirement is too prescriptive.

It is expected that examinations will be specific to the risk associated with the medical use of the byproduct material. For example, it is reasonable to expect that one exam could be used to address an authorized user's competency for the medical use of material pursuant to §§ 35.100, 35.200, and 35.300, and that another examination would be needed to assess competency for use pursuant to §§ 35.400 and 35.600. The Commission plans to discuss the examination process with stakeholders at the facilitated public meetings scheduled to be held during the comment period of this rulemaking.

NRC expects that it will take approximately 2 years for the industry to submit required information, to NRC or an Agreement State, for approval of specialty boards or organizations providing the exam and for NRC to approve the boards or examining organizations. This expectation is based on written and verbal support, received from professional organizations, for training and experience requirements that would require written examinations to assess competency and, on statements made by members of specialty boards

indicating that only minor changes would need to be made to their current certification process to address the changes proposed by the Commission. The Commission anticipates that specialty boards and examining organizations will be prepared to submit requests for approval immediately following publication of the final rule. Nevertheless, the Commission is soliciting specific public comment on the amount of time that specialty boards and examining organizations will need to prepare and submit an application for approval of the Commission or an Agreement State.

Since NRC expects that it will take approximately 2 years to complete approval of most specialty boards and examining organizations, NRC has maintained the current training requirements in subpart J of the proposed rule. As discussed under the **SUPPLEMENTARY INFORMATION** section of this document, for a 2-year period after publication of the final rule, licensees will have the option of meeting either the requirements in subpart J or the requirements in subparts B and D–H. After the 2-year period, the requirements in subpart J will be deleted, and the licensee will need to comply with the requirements in subparts B and D–H.

B. Quality Management Program

1. Facilitated Workshops

Workshop participants expressed both support for the quality management program and opposition to it. Those who support it described several benefits of the program, including the requirement for licensees to have a quality management program and related requirements for ''recordable events'' and written directives. Opponents of the quality management program rule described it as overly prescriptive, burdensome on licensees, and ineffective in reducing the number of misadministrations. According to certain participants, the current quality management program rule interferes with quality medical care. Many believed that the current quality management rule did little to reduce the number of misadministrations.

Some participants who did not support the quality management program expressed support for a performance-based rule that would not require licensees to submit the quality management program for regulatory approval. In their opinion, a performance-based rule would also provide a licensee with the flexibility to custom-tailor a quality management program to meet that facility's quality management needs, including patient verification, ensuring that physician's directions are written, and verifying doses to patients. Some participants proposed that NRC work with other organizations or agencies to ensure quality assurance through other mechanisms in place. Another recommendation was that the proper way to reduce misadministrations is through better training and ensuring, during the licensing process, that personnel are qualified.

2. Agreement States Workshop

Some Agreement States and members of the public agreed that the current quality management rule has not addressed the problem of misadministrations. In addition, they do not believe that the quality management rule goes beyond what would typically be considered ''quality management.'' They believe that modifying the quality management program will not solve that problem.

Agreement States supported an option that would state the objectives of a quality management program (without being prescriptive), but would not require a written quality management program. Other States believed that the responsibility for quality management should lie exclusively with the medical facility, not with a regulatory agency.

A member of the public advocated, in lieu of a quality management program, a training requirement for technicians and a requirement that a physician be present whenever a therapeutic dose is administered. The individual stated that the latter requirement has significantly reduced the number of misadministrations in her State. Another member of the public suggested that a proposed rulemaking by the Health Care Financing Administration (HCFA) was expected to define three levels of supervision for imaging modalities. He explained that physicians would be required to be in the facility, if not in the room, when a dose was being administered in diagnostic nuclear medicine.

3. ACMUI

Requirements for a quality management program have been discussed on numerous occasions with the ACMUI. At the September 1997 meeting, the Committee recommended that the Commission pursue development of a rule that would state only the objectives for a quality management program. At the March 1998 meeting, the ACMUI discussed the NRC staff's proposed revisions to the quality management program. The ACMUI agreed with the NRC staff's proposal to delete the requirements for a quality management program. Although the ACMUI would have preferred deletion of the requirement for written directives and the reference to assuring high confidence that the patient's or human research subject's identity is verified and that each administration is in accordance with the written directive, it recognized that the Commission finds these objectives to be fundamental.

4. Written Comments

Approximately 10 written comments were submitted to the Commission on the quality management program. The majority of the comments favored deletion of any requirements in this area. Most believed that there were industry standards in place that adequately addressed administration of byproduct material; the rule intruded into medical practice; and regulation in this area was onerous. One professional society recommended that the title be changed to ''Quality Assurance and Patient Safety Regulations'' and believed that the regulations should be limited to requiring written prescriptions for therapy; requiring licensees to develop quality assurance programs for treatment planning and delivery devices; and requiring that independent checks be made against the written prescription before completion of a treatment. A limited number of commenters believed that the current requirements should be maintained because the quality management program provides a mechanism for reporting events and because licensees have already developed quality management plans that meet the intent of the rule.

5. Resolution

The Commission has deleted the requirement for a quality management program. However, the Commission believes there are three elements of the current quality management program that should be addressed in the proposed rule: confirming patient identity, requiring written directives, and verifying dose. The Commission believes that some elements of the current quality management program requirements will continue to be implemented as part of the ''standard of care'' in medicine. In this regard, the Commission acknowledges that other factors, such as accreditation, have resulted in medical institutions adopting programs similar to those previously specified in the rule.

C. Reportable Events

1. Facilitated Workshops

The participants generally agreed that current threshold levels for reporting are too low and supported raising threshold levels. However, some participants supported the option of maintaining the current thresholds, arguing that they were familiar with the levels and reports and records of misadministrations are necessary. Participants agreed that threshold levels for recording and reporting events should be based on risk. Several participants argued that threshold levels for reportable events and Abnormal Occurrences should be the same. The NRC was commended for suggesting that the term ''misadministration'' be replaced with the term ''reportable event.''

2. Agreement State Workshop

Discussion focused on the topic of precursor events, rather than on the threshold for reportable events. There was, however, a very brief discussion on reporting of misadministrations. Various statements made during the discussion included: regulatory agencies did not need to be informed of misadministrations, unless an event exceeded certain levels or occurred more than once; licensee management, rather than a regulatory agency, should be informed of misadministrations; and regulatory agencies should confirm, during periodic inspections, that licensee management is informed in cases of misadministrations, and that proper corrective actions are taken.

3. ACMUI

The ACMUI discussed the threshold for reportable events at the September 1997 and March 1998 meeting. At the September 1997 meeting, the Committee reached a consensus, recommending that the current criteria for radiopharmaceutical misadministrations be reduced from three categories to two. The two categories would be ''radiopharmaceuticals not requiring a written directive'' and ''radiopharmaceuticals requiring a written directive.'' The Committee pointed out that there is a major deficiency in the current misadministration definition, i.e., there is no threshold dose for wrong treatment site. They also stated that the reporting mechanism should be decoupled from patient notification. Finally, they agreed that an underdosage, if corrected in a clinically timely manner, should not have to be reported.

At the March 1998 ACMUI meeting, the NRC staff presented a proposed revision of the current reporting criteria. The proposed reporting requirement contained a dose threshold and modality-based criteria. The ACMUI discussed the proposed criteria and offered suggestions for minor technical corrections, but did not make a formal recommendation in this area. The Committee recognized that the NRC staff was still making changes in the proposed text to address the wrong treatment site and patient intervention.

4. Written Comments

Sixteen comments were received in this area. Two of the commenters recommended raising the reporting threshold to the NRC's Abnormal Occurrence criteria for misadministrations. Several commenters provided general comments on the reporting criteria, including a name change from ''misadministration'' to ''medical event.'' The remainder of the commenters provided specific recommendations for changes to the current reporting criteria, including recommendations for addressing patient intervention and wrong treatment site.

5. Resolution

The Commission has a statutory responsibility to keep Congress and the public informed of incidents or events which the Commission considers significant from the standpoint of public health and safety. These criteria are specified in NRC's Abnormal Occurrence Policy Statement, dated April 17, 1997 (62 FR 18820). Licensees must provide NRC with information on events meeting these criteria, in order for NRC to make needed reports to Congress.

The term ''misadministration'' has been deleted. The proposed rule would require licensees to report ''medical events.'' The criteria for a medical event is based on the current requirements in § 35.33, Notifications, reports, and records of misadministrations. Minor changes were made to make the reporting threshold dose-based, where possible, and to address two areas that have caused problems in implementing the current requirements in § 35.33, Patient intervention and wrong treatment site.

D. Precursor Events

1. Facilitated Workshops

Participants in the facilitated public workshops, as well as members of the public, believe that:

(1) There are already adequate mechanisms in place for identifying precursor events;

(2) Additional requirements for notifying NRC about precursor events could result in a significant financial burden for both NRC and licensees without an associated incremental increase in safety;

(3) Because of the nature of precursor events, it will be hard to precisely define a precursor event in rule language; and

(4) Inclusion of a requirement for reporting precursor events could lead to an additional basis for enforcement action.

2. Agreement State Workshop

The discussion on this subject focused on how to identify ''precursor events.'' Many of the participants opposed adding additional requirements for reporting precursor events. According to some Agreement States, mechanisms are already in place to provide information to licensees about incidents which may be ''precursors'' to reportable events. Most States were in favor of identifying precursors, but believe notification should be limited to facility management (especially the radiation safety organization). Some participants noted that reporting those events to a regulatory agency could actually inhibit their identification. They did, however, support internal programs for identifying precursor events. Finally, they stated that reporting to NRC or to the Agreement States would not be helpful unless a mechanism existed to share the information with the industry.

A member of the public noted that there are numerous event reporting requirements under which medical institutions document problem areas and conduct audits of potential problem areas. The individual encouraged NRC to avoid duplicating already existing programs.

3. ACMUI

The ACMUl discussed the best way to capture precursor events at its September 1997 and March 1998 meetings. At the September 1997 meeting, most Committee members supported voluntary reporting of precursor events, provided there would be no punitive action taken by NRC against a licensee as a result of a report. One member recommended against reporting of precursors, whether mandatory or not, if it was going to have significant resource implications for NRC or the licensee.

At the March 1998 meeting, the ACMUl considered three alternatives proposed by NRC staff:

(1) Require reporting of conditions or incidents related to the use of radionuclides in medicine that caused or could cause serious injury to a

patient, human research subject, worker, or the public;

(2) Require reporting deficiencies in equipment or procedures supplied by a manufacturer or vendor that, in the opinion of the Radiation Safety Officer, could lead to a medical event at that facility or could have detrimental health and safety implications beyond the licensee's facility; and

(3) Rely on current NRC reporting requirements in 10 CFR parts 20, 21, and 30 and the Memorandum of Understanding with the U.S. Food and Drug Administration and monitor/establish a system with U.S. Pharmacopeia to review its database on event reports.

The ACMUI acknowledged that the Commission wanted to capture precursor events. The ACMUI believed that it was appropriate to clearly define and limit the type of events that would be required to be reported in order to minimize the resource burden on licensees and the NRC. The ACMUI recommended that the NRC staff pursue the second alternative, with minor adjustments.

4. Written Comments

Approximately five written comments were received on capturing precursor events. One commenter indicated that NRC should develop a nonpunitive method of capturing information while minimizing the burden on licensees, citing the FDA device malfunction reporting system as a model. Three other commenters felt that precursor events were not specifically enough defined (in an earlier draft of the proposed rule) and recommended that they not be included in the proposed rule. Of the remaining two commenters, one commenter did not support reporting precursor events under any condition, while the other supported voluntary reporting.

5. Resolution

The proposed rule does not contain a requirement for licensees to report precursor events to the NRC. Based on comments received from the public, the Commission believes that there are existing regulations in place that contain sufficient requirements for licensees to identify and report events to the Commission. The Commission plans to issue an Information Notice to remind licensees of the current reporting requirements and to reinforce the need for compliance with these requirements.

E. Radiation Safety Committee

1. Facilitated Workshops

Workshop participants expressed different opinions about the benefits of radiation safety committees. Some participants stated that although radiation safety committees may be beneficial, the time and resources that must be devoted to managing the committees are excessive and the specific requirements in the regulation are overly prescriptive and not risk-based. Many participants believed that licensees should be given more flexibility in how they administer radiation safety programs. Some participants also expressed concern that the radiation safety committee may not be necessary for effective radiation safety management at small medical institutions.

Some participants believed that a single committee, focused on radiation safety, was an important element of a radiation safety program and, therefore, recommended that the requirement for a committee be maintained. They believed that the committee enhanced communication between disciplines and departments. They were concerned that, without a requirement for a radiation safety committee, administrative support for the committee would decline and there would be decreased management involvement in the radiation safety program.

2. Agreement States

Discussions at the workshop centered around two issues:

(1) Whether the radiation safety committee plays a valuable role in all medical institutions, regardless of size and use of byproduct material; and

(2) Whether the current radiation safety committee requirements in Part 35 are too prescriptive and should be relaxed.

The majority of the participants in the workshop argued that the radiation safety committee requirements should recognize the differences between large and small institutions and between low- and high-risk procedures. Participants asserted that a radiation safety committee is unnecessary at smaller, diagnostic facilities. They generally supported the lessening of prescriptive requirements for smaller, diagnostic facilities. They argued that regulations place an unnecessary burden on facilities that conduct few procedures per year but still are required to conduct quarterly meetings. Another participant opposed a prescriptive rule, but acknowledged that it would be simpler to enforce than a performance-based rule.

3. ACMUI

Requirements for a radiation safety committee were discussed with the ACMUI at its September 1997 and March 1998 meetings. At the September 1997 meeting, the ACMUI recommended that the NRC staff pursue developing a requirement for radiation safety committees at institutions that perform high-risk procedures. Facilities that use diagnostic, low-dose, sealed and unsealed byproduct material would not be required to have a radiation safety committee.

At the March 1998 meeting, the ACMUI agreed with the Commission's proposed deletion of the requirement for a radiation safety committee. ACMUI supported the addition of requirements for licensee management to approve licensing actions and minor revisions to the radiation safety program; and for a licensee to implement procedures for interdepartmental/interdisciplinary coordination of the licensee's radiation protection program. They believed that the proposed language would not prohibit a large organization from utilizing a radiation safety committee, but would, at the same time, reduce regulatory burden on small rural hospitals which have small staffs and where a committee may not be needed to manage the radiation protection program.

4. Written Comments

Approximately 10 written comments were submitted regarding the requirement for a radiation safety committee. The majority of the comments favored retention of the requirement for a radiation safety committee at larger facilities. These commenters believed that a committee was an effective way to ensure that management is involved in the operation of the radiation safety program. They recommended that a ''graded'' approach could be used in determining if a committee was needed, e.g., small facilities or facilities with limited use of material would not be required to have a committee. However, two commenters believed that the requirement for a radiation safety committee should be deleted in its entirety. Two others believed that the requirements should not be revised.

The Commission recognizes that medical facilities normally have a number of committees examining various areas, including safety issues, in response to accreditation requirements, etc. Specification of the objectives to be met by the radiation protection program (in the proposed § 35.24), rather than the particular mechanism to be used in meeting those objectives, is an effort to provide licensees flexibility in carrying out the responsibilities for radiation safety.

5. Resolution

The Commission is proposing deletion of the requirement for a radiation safety committee. The Commission believes that key functions of the radiation safety committee could be transferred to licensee management and that the prescriptive requirements in the current rule should be deleted. The Commission believes that many institutions will continue to use a radiation safety committee to oversee use of radioactive material. However, it recognizes that radiation protection program oversight may be accomplished by other means. In particular, the Commission recognizes that medical facilities normally have a number of committees examining various areas such as environmental safety. These committees are typically formed in response to hospital accreditation requirements.

In an effort to afford licensees flexibility in achieving the objectives of radiation safety, the proposed rule specifies objectives that must be achieved rather than specifying the mechanism to meet the objective. The proposed rule would require that the licensee approve licensing actions; individuals prior to allowing them to work as a Radiation Safety Officer, authorized user, authorized nuclear pharmacist, or authorized medical physicist; and radiation protection program changes that do not require a license amendment. The proposed rule also contains a requirement for the licensee to develop, implement, and maintain administrative procedures for interdepartmental/interdisciplinary coordination of the licensee's radiation protection program.

F. Notification Following a Misadministration or Medical Event

1. Facilitated Workshops

Many participants believed that the current requirements for licensees to notify the NRC, the referring physician, and the patient of a misadministration is an intrusion into both the practice of medicine and the confidential patient-physician relationship. They stated that the decision whether to notify the patient should be left solely to the physician. Those participants asserted that medical ''standards of practice,'' ''risk management'' practices of medical institutions, and tort law are the mechanisms that should address notification of patients.

Therefore, according to these participants, Federal or State legal requirements for such notifications are unnecessary and inappropriate. Some participants believed that an authorized user would never withhold information from a referring physician because to do so would destroy the relationship between the authorized user and the referring physician.

Workshop participants did not believe that the requirement for a licensee to provide a written report to the individual was appropriate. They believed that a report that was submitted to NRC may greatly magnify, in the patient's mind, the significance of the event, when in fact, a medical event could be of minimal safety significance. However, other participants stated that without the NRC requirement for patient and referring physician notification, the physician's ethical obligation to make these notifications must be strong. Some commenters believed that the exchange of information between physicians should extend to patients as well. The participants espousing this viewpoint believe that such requirements may be necessary to protect patients and their right to know of misadministrations.

2. Agreement State Workshop

Some participants noted that legal requirements for protecting the privacy of patients vary from State to State and may differ from Federal requirements. Other participants stated that medical standards of practice, tort law, and medical institution risk management are mechanisms to address fundamental patient notification and, therefore, State or Federal requirements for such notification are unnecessary.

3. ACMUI

Notification requirements have been discussed on numerous occasions with the ACMUI. The ACMUI most recently discussed the requirements in this area at its March 1998 meeting. The ACMUI continues to affirm its position that it does not support any Federal regulation requiring notification of physicians and patients. The committee strongly believes that patient notification of medical events should occur as part of the patient-physician ''fiduciary'' relationship, in which the ''standard of care'' for a physician is to provide the patient with complete and accurate information.

4. Written Comments

Three written comments directly addressed notification following a medical event. Two professional organizations recommended that the requirement be deleted. One State recommended that the requirement be maintained.

5. Resolution

The Commission believes that the current requirements for notifying individuals following a misadministration should remain unchanged with the exception of substituting the term ''medical event'' for ''misadministration.'' Changing terminology in this way responds to objections that the term ''misadministration'' has possible connotations of carelessness and harm, which is not always the case. Furthermore, the term ''medical event'' used in the proposed rule is consistent with the terms used to characterize events in other activities regulated by the NRC. The proposed rule would require that the licensee notify the NRC, referring physician, and the individual who is the subject of a medical event, unless the referring physician personally informs the licensee that he will inform the individual or that, based on medical judgment, telling the individual would be harmful. In the latter case, or if for example, the patient is a minor, or is unconscious and incapable of comprehending the information. It is expected that the licensee would report to the patient's responsible relative or guardian rather than to the patient. This position reaffirms statements made by the Commission, at the time the misadministration rule was proposed and/or promulgated (and later modified), that patient notification ''* * * recognizes the right of individuals to know information about themselves which is contained in records both inside and outside the Federal sector.'' ''Human Uses of Byproduct Material, Misadministration Reporting Requirements,'' (43 FR 2927; May 7, 1978); ''Misadministration Reporting Requirements,'' (45 FR 31701–31702; May 16, 1980); and ''Basic Quality Assurance Program, Records, and Reports of Misadministrations or Events Relating to the Medical Use of Byproduct Material,'' (55 FR 1439–1444; January 16, 1990). The Commission also believes that patient notification enables patients, in consultation with their personal physicians, to make timely decisions regarding any remedial and prospective medical care. This approach would also codify existing industry standards [American Medical Association Principles of Medical Ethics] obligating physicians to provide complete and accurate information to their patients.

This approach is consistent with the U.S. Food and Drug Administration (FDA) regulation and with how

Congress is addressing similar issues in the mammography area. In October 1992, Congress passed the ''The Mammography Quality Standards Act'' (Public Law 102–539) to establish national quality standards for mammography. In December 1993, the FDA promulgated interim regulations setting forth quality standards for mammography facilities. In October 1997, the FDA issued a final rule that becomes effective in April 1999. The final rule requires that, in cases where ''FDA determines that the mammography program at a facility may present a serious risk to human health, a facility must notify the patients or their designees, their physicians or the public of action that may be taken to minimize the effects of the risk.'' Currently, the Senate has passed and the House is considering bills (S. 537 and H.R. 1289) to amend the Mammography Quality Standards Act to, inter alia, add a new section to the Act on patient notification. The bills will provide FDA with the authority to require a facility to notify patients (and their referring physicians) of, among other things, the potential harm resulting from mammograms that may have been of poor quality because of deficiencies in the mammography program at that facility.

G. General Comments

In addition to the comments on the crosscutting issues discussed above, NRC received comments on specific sections of the rule and on several general topical areas. These comments are available for review in the NRC Public Document Room, 2120 L Street, NW. (Lower Level), Washington, DC. Comments on specific sections of the rule were taken into consideration in preparing the proposed rule. General comments are summarized below.

1. Process for Developing the Risk-Informed, Performance-based Rule

a. Comments.

Workshop participants and written commenters discussed development of a risk-informed, performance-based rule. Some commenters recommended that NRC not proceed with any revision of Part 35 until it had performed an adequate and comprehensive evaluation of the risks associated with medical use. They recommended that the assessment should be performed by an ''independent scientific organization'' and completed in advance of any rulemaking. The risk analysis should follow the guidelines outlined by the Presidential Commission on Risk Assessment and Risk Management.

Some commenters did not believe that the current regulatory system makes optimal use of either NRC or licensee resources. They believed that NRC regulations and their associated paperwork burden inevitably contribute to the cost of providing clinically necessary procedures and may compromise the availability of the benefits of medical use of byproduct material. They recommended that NRC be guided by the following basic principles: rules should emphasize training and credentialling of professional staff deemed essential to safe operations, quality assurance and technical regulations should be based on available practice standards, and regulations should not be promulgated in the absence of a demonstrated risk to the public or patients.

Some commenters believe that Part 35 is duplicative of the Food and Drug Administration (FDA) statutes and implementing regulations and does not provide any added overall benefits to the regulatory framework. They believed that the FDA regulatory scheme is comprehensive, requiring documentation of adverse effects relating to the use of all drug products, including radionuclides; regulations under 10 CFR Part 20 are adequate to protect health and safety; high-risk medical use can be regulated on a case-by-case basis through licensing conditions; and some prescriptive license conditions can be offset by performance-based flexibility, which is preferable to prescriptive regulations of medical users.

Finally, some commenters questioned the schedule for completion of the rulemaking. They believe that sufficient time must be provided to undertake a thorough effort to change the rule and for public comment on draft documents, including regulatory guides. They also believe that reorganization of Part 35 based on ''similar subject areas'' is appropriate, but the rule should include references to requirements in Part 20.

b. Resolution.

As a result of the NRC's Strategic Assessment and Rebaselining efforts, the NRC staff formed the Nuclear Byproduct Material Risk Review Group to develop a risk-informed, graded approach to regulating many material uses, including medical uses. The group's final recommendations are expected in the fall of 1998 and will be considered by the NRC staff during the Part 35 rulemaking process. The Commission considered input from a 1993 internal senior management review report; an external review report by the National Academy of Sciences, Institute of Medicine; and the information presented in the Strategic Assessment Direction-Setting Issue Paper Number 7 (DSI–7) prior to determining the role of NRC regulation in the medical use area. On the basis of these reviews, the Commission believes that Part 35 should be restructured into a risk-informed, more performance-based regulation. In developing the regulation, the Commission considered information on risk provided by members of the public and professional societies, professional medical standards of practice, and event databases maintained by NRC. The draft proposed rule reflects numerous changes from the existing requirements which reduce the regulatory burden to the average licensee.

2. Agreement State Compatibility

a. Comments.

Commenters recommended that NRC follow its Strategic Plan to work with Agreement States to assure protection of the public health and safety nationwide, especially where constraints due to inconsistent regulation result in barriers to accessibility of medical use involving radionuclides. One commenter suggested that Agreement States should not be required to adopt any of the revised rule or accompanying guidance documents.

b. Resolution.

The Working Group and Steering Group established to revise Part 35 are comprised of NRC staff, as well as representatives of two Agreement States and a non-Agreement State. One of the Agreement State representatives on the Working Group is also a member of the Conference of Radiation Control Directors' Suggested State Regulation Committee on Medical Regulation, which is working toward parallel development of suggested state medical use regulations. The Working and Steering Groups received input from the Agreement States at several times during the rulemaking process. NRC representatives met with representatives of the Agreement States during the October 1997 All Agreement States Meeting. Agreement State representatives were invited participants at the facilitated public meetings. One Agreement State representative provided written comment during the early input stages of the proposed rule development.

The Commission has reviewed the proposed rule for issues of compatibility for Agreement States. Specific designations for the proposed rule are discussed under Section IX of the **SUPPLEMENTARY INFORMATION** section of this document.

3. Licensing and Enforcement Actions

a. Comments.

Some commenters believed that NRC must change to a performance-based compliance system in order to have a significant impact on the entire medical use program. They believed that no change would occur if the NRC deleted regulatory requirements but had license reviewers demand that licensees make equivalent commitments in license applications or add equivalent conditions to the license. Some commenters stated that licensees should be allowed to operate their radiation safety programs without ''procedure-by-procedure'' approval by NRC and that regulations should cover all necessary requirements. Commenters recommended that NRC abandon an adversarial enforcement strategy based on punishment for infractions.

Commenters also believed that no change would occur if inspectors continued to apply regulatory and license requirements without regard to fault, and if inspectors continue the practice of issuing citations for minor regulatory requirements which can be attributed to normal human error and which have no safety significance. They stated that NRC must develop an enforcement system that allows for exercising clinical judgment, evaluating quality assurance policy deviations in terms of safety rather than legal significance, and accepting voluntary practice standards and measures of practice quality as the regulatory endpoints.

b. Resolution.

The proposed rule provides for an overall change in regulatory philosophy. Consistent with a risk-informed, performance-based approach to medical use licensing, the amount of information needed from an applicant to possess and use byproduct material would be reduced. An applicant for an NRC medical use license would have to submit a signed application, documentation of the training and experience of the individuals named on the license, and the facility diagram and list of instrumentation. While licensees would be required to develop, implement, and maintain procedures required by the regulations, they would no longer be required to submit these procedures as part of the license application. Furthermore, licensees will be provided maximum flexibility in developing their procedures because most of the requirements for procedures provide performance-based objectives to be achieved, rather than a list of prescriptive details that need to be addressed in the procedures.

The NRC plans to review the enforcement policy as part of its overall revision of Part 35. This review will take into account written comments as well as those comments received during the facilitated public meetings that are scheduled to occur during the formal comment period.

IV. Discussion of Text of Proposed Rule

10 CFR Part 20—Standards for Protection Against Radiation

Section 20.1301, Dose limits for individual members of the public, would be revised. The proposed rule responds to the petition from the University of Cincinnati by amending § 20.1301 to allow a licensee the discretion to permit visitors to receive up to 5 mSv (0.5 rem) in a year from exposure to individuals who are not releasable pursuant to § 35.75. Currently, visitors are limited to 1 mSv (0.1 rem).

The Commission has used 5 mSv (0.5 rem) as a threshold for action in multiple locations in Parts 20 and 35. This threshold is used as both a dose limit and a reporting level. For example, § 35.75 uses the 5 mSv (0.5 rem) as a dose limit for members of the public exposed to patients released pursuant to § 35.75. The proposed change to § 20.1301 would also use 5 mSv (0.5 rem) as a dose limit for visitors of confined patients. In contrast, however, the proposed changes to § 35.3047, Report of a dose to an embryo/fetus or a nursing child, would establish a 5 mSv (0.5 rem) reporting threshold (reference § 35.3047 for a more detailed discussion of the proposed change).

In accordance with § 35.75, patients containing radioactive material can be released from licensee control if the total dose to other individuals from exposure to the released patient is not likely to exceed 5 mSv (0.5 rem). The Commission recognizes that the provisions of § 35.75 and the proposed revision to § 20.1301(a) could result in rare instances in which certain individuals could receive a 10 mSv (1.0 rem) dose. For example, an individual could receive a 5 mSv (0.5 rem) dose while visiting a patient who can not be released pursuant to § 35.75, and then later receive a 5 mSv (0.5 rem) because of exposure from the released patient. The Commission believes that the authorized user is the appropriate individual to evaluate, on a case-by-case basis, the merits of allowing a visitor to receive this potential additional dose and would do so only when it is warranted by the situation.

A potential consequence of this rulemaking is that pregnant visitors would not be excluded automatically from visiting individuals who could not be released pursuant to § 35.75. The pregnant visitor is subject to the same exposure limits that are applied to any other adult member of the public. The reasons for not excluding pregnant visitors under this rulemaking are two-fold. First, as noted in NCRP Commentary No. 11, members of a radionuclide therapy patient's family are likely to perceive that visitors will benefit from providing emotional and physical support to the patient during their treatment, and these visitors are likely to be willing to bear greater risk in order to achieve that benefit. Second, declaration of pregnancy by a prospective visitor is strictly voluntary. If a prospective visitor does not voluntarily declare her pregnant status, the authorized user is not expected to demand confirmation of the visitor's nonpregnant status.

As stated earlier, the proposed revision to § 20.1301 differs from the proposed revision to § 35.3047. The revision to § 20.1301 would revise the dose limit for a small population of individuals, namely visitors to individuals who can not be released pursuant to § 35.75. In contrast, the proposed revision to § 35.3047 would establish a reporting threshold for doses to an embryo/fetus or nursing child. For example, under the proposed § 20.1301, a pregnant visitor could receive 5 mSv (0.5 rem) as a result of a visit to a patient who has not been released. Under the proposed revision to § 35.3047, if the dose to an embryo/fetus exceeds 5 mSv (0.5 rem), as a result of an unintended administration to the mother, a report must be submitted to NRC. Finally, in the course of diagnosis and treatment, an authorized user may approve, in advance, an administration of byproduct material to a pregnant woman that may result in an absorbed dose to an embryo/fetus that exceeds 5 mSv (0.5 rem).

The Commission does not intend to require monitoring and recording of individual doses. The NRC evaluated the costs associated with monitoring individuals versus the benefits derived and determined that, at these low doses, monitoring is not justified. However, this does not preclude the licensee from monitoring and recording individual doses.

10 CFR Part 32—Specific Domestic Licenses to Manufacture or Transfer Certain Items Containing Byproduct Material

Section 32.72, Manufacture, preparation, or transfer for commercial distribution of radioactive drugs containing byproduct material for

medical use under Part 35, would be revised as a result of the proposed revision of Part 35. Paragraph (b)(1) would be revised to reference the proposed § 35.27 rather than the current § 35.25 which would be deleted. This change was necessitated because of the proposed renumbering of some Part 35 sections. Paragraph (b)(2)(ii) would be revised to include both the proposed and current training and experience requirements for authorized nuclear pharmacists and to reference the proposed § 35.59 rather than the current § 35.972 which would be deleted. As discussed in subpart J, the current training and experience requirements would be deleted 2 years after the effective date of the final rule.

Section 32.74, Manufacture and distribution of sources or devices containing byproduct material for medical use, would be revised as a result of the proposed revision of Part 35. Paragraphs (a) and (a)(3) would be revised to add a reference to the proposed § 35.600. The current section does not include a reference to medical use of sealed sources in therapeutic devices. This oversight would be corrected by the proposed rule.

10 CFR Part 35—Medical Use of Byproduct Material

Subpart A, General Information, contains general information regarding medical use of byproduct material.

Section 35.1, Purpose and scope, would be revised to specify that the requirements and provisions in Part 35 provide for the radiation safety of workers, the general public, patients, and human research subjects. Inclusion of the phrase ''patients, and human research subjects'' makes it clear that the provisions of this rule would apply to the radiation safety of those individuals. This addition is consistent with the proposed revision of the Medical Use Policy Statement that will be published separately in the **Federal Register.** The section would also be revised to add a reference to Part 171, ''Annual Fees for Reactor Operating Licenses, and Fuel Cycle Licenses and Materials Licensed, Including Holders of Certificates of Compliance, Registrations, and Quality Assurance Program Approvals and Government Agencies Licensed By NRC.'' This revision would make it clear that the provisions in Part 171 apply to medical licensees.

Section 35.2, Definitions, would be amended by deleting the definitions of ''ALARA,'' ''dental use,'' ''ministerial change,'' ''misadministration,'' ''podiatric use,'' and ''recordable event'' because they do not appear in the proposed rule.

The definitions for authorized nuclear pharmacist and authorized user would be revised to eliminate the specific board certifications by name and to refer to the specific section containing the requirements that the individual must meet to be considered an authorized nuclear pharmacist or an authorized user. Reference to the specific board certifications would be deleted because the proposed rule contains provisions for NRC to approve boards. The definition of ''authorized nuclear pharmacist'' would also be revised to recognize nuclear pharmacists that have been approved by a nuclear pharmacy that has been authorized by the Commission to approve authorized nuclear pharmacists.

The definition of ''Radiation Safety Officer'' would be revised to include a reference to the specific requirements that an individual must meet in order to be authorized as a Radiation Safety Officer. This change was done to make the definition of Radiation Safety Officer consistent with the definitions of authorized nuclear pharmacist, authorized user, and authorized medical physicist.

The definition of ''written directive'' would be revised to delete the provision for the date the directive was signed, and the signature of the authorized user before administration of any byproduct material or radiation from byproduct material to a specific patient or human research subject. These specific requirements have been moved to § 35.40.

The definition of ''teletherapy physicist'' would be deleted and replaced with a definition for ''authorized medical physicist'' because it is a broader term that includes physicists that work with all types of therapeutic units.

The definition of ''mobile nuclear medicine'' would be deleted and replaced with a definition for ''mobile service'' because it is a broader term that would encompass all modalities that could be performed by a mobile service. A new definition would be added for ''temporary jobsite.'' This is needed since it is used in defining ''mobile service.'' The definition of ''temporary jobsite'' is based, in part, on the definition of ''temporary jobsite'' as used in 10 CFR Part 34, ''Licenses for Industrial Radiography and Radiation Safety Requirements for Industrial Radiographic Operations.''

Definitions would be added for ''high dose-rate remote afterloader,'' ''low dose-rate remote afterloader,'' ''pulsed dose-rate remote afterloader,'' and ''stereotactic radiosurgery'' because use of these units would be addressed in Part 35. The definitions of ''high dose-rate remote afterloader'' and ''low dose-rate remote afterloader'' contain dose rates specific to each type of afterloader. The Commission is not proposing to define the term ''medium dose-rate remote afterloader'' since it is not used in the proposed rule. The Commission noted that there was very little difference between the regulatory requirements for a medium dose-rate remote afterloader and high dose-rate remote afterloader and, therefore, has chosen to group the units. The Commission is soliciting public comment on whether the rule should specifically reference medium dose-rate remote afterloaders.

A definition for ''medical event'' would be added and refers to the criteria listed in § 35.3045(a), Reports of medical events. A new definition, ''precursor event,'' would be added and refers to the criteria listed in § 35.3046(a). (Reference Section III, C, of the **SUPPLEMENTARY INFORMATION** section of this document for more detailed discussion.)

A new definition, ''treatment site,'' would be added because it is used in § 35.2045 of the proposed rule. A new definition, ''unit dosage,'' was added because it is used in §§ 35.60 and 35.63 of the proposed rule.

Section 35.5, Maintenance of records, would be revised to insert ''and'' in the current phrase ''drawings and specifications.''

Section 35.6, Provisions for research involving human subjects, would be unchanged. However, the Commission is soliciting comment on whether this section should be revised to require that licensees develop, implement, and maintain procedures for evaluating when a medical procedure would be considered to be a research procedure.

Section 35.7, FDA, other Federal, and State requirements, would be unchanged.

Section 35.8, Information collection requirements; OMB approval, would be revised to reflect the renumbering of some sections within the rule and the additional recordkeeping and reporting sections in the proposed rule.

Section 35.10, Implementation, would be a new section that discusses the proposed provisions for implementing the final rule. A detailed discussion of the implementation provisions can be found in Section VIII of the **SUPPLEMENTARY INFORMATION** section of this document. This section would replace the current § 35.999, Resolution of conflicting requirements during transition period.

Section 35.11, License required, would be revised to reflect that the requirements for supervision in the current § 35.25 would be replaced by the proposed requirements in § 35.27.

Section 35.12, Application of license, amendment, or renewal, would be revised.

Paragraph (a) would be revised to state that any application for a license, amendment, or renewal must be signed by the management of the facility. The current rule indicates that any person may apply if the application is for medical use not sited in a medical institution and that only management may apply for a license if the application is for use in a medical institution. The Commission believes it is important that facility management apply for a license, regardless of where the material is used, because NRC holds the licensee responsible for any actions of its employees. Paragraphs (b) and (c) would be revised to more clearly state that separate applications must be submitted for medical uses listed in § 35.600, other than remote afterloaders. Separate applications must be submitted for teletherapy and gamma stereotactic radiosurgery units because the scope and nature of information needed is much different than that needed for the other types of medical use. This requirement does not imply that the applicant has separate safety programs. Paragraphs (b) and (c) would also be revised to delete the reference to the Regulatory Guides. Guidance for completing an application may be found in draft NUREG–1556, Vol. 9, ''Consolidated Guidance About Materials Licenses, Program-Specific Guidance about Medical Use Licenses.'' Draft NUREG–1556, Vol 9, is available for inspection at the NRC Public Document Room, 2120 L Street NW. (Lower Level), Washington, DC. Single copies of the draft NUREG are available as indicated in the **FOR FURTHER INFORMATION CONTACT** section of this document.

Paragraph (d) would be added to address applications for medical use of byproduct material that are not specifically included in subparts D through H of the proposed rule, henceforth referred to as ''emerging technologies'' (e.g., intravascular brachytherapy). The current rule does not provide for efficient licensing of emerging technologies. Paragraph (d) would provide a generic list of the information needed by NRC to approve a use that is not specifically addressed in subparts D through H of the proposed rule.

Section 35.13, License amendments, would be revised to reflect the new numbering as a result of the overall revision of Part 35. Paragraph (b) would be revised to indicate that a licensee does not need to amend its license before allowing anyone to work as an authorized medical physicist if that individual meets the training and experience requirements in § 35.51 or § 35.961, and the requirements were met within the 7 years preceding the date of the application. Paragraph (c) would be revised to delete the requirement for licensees to amend a license if the teletherapy physicist changes provided the individual meets the requirements in §§ 35.51(a) and 35.59 or §§ 35.961 and 35.59. This change is consistent with existing licensing requirements for authorized users and authorized nuclear pharmacists.

The Commission recognizes that unusual conditions may arise when the Radiation Safety Officer leaves a facility with little to no advance warning. In this event, the licensee may want to consider using an authorized user to fill the position, pending appointment of a new Radiation Safety Officer. Under these conditions, the licensee must move expeditiously to permanently fill the position of Radiation Safety Officer. In these situations, the licensee should contact the appropriate NRC regional office and explain the situation.

In order to reduce regulatory burden, paragraph (e) would be revised to delete the requirement for a licensee to apply for a license amendment if there is a change in the areas where byproduct material is used for diagnostic purposes pursuant to §§ 35.100 and 35.200. For example, a licensee would not be required to apply for a license amendment to move a scan room in a diagnostic nuclear medicine department that uses byproduct material in quantities that would not require a written directive. However, this provision does not apply to any storage or waste areas because of the potential for large quantities of materials to accumulate in these areas and the possibility of commingling of radioactive material that is used pursuant to other sections of the rule. Paragraph (f) would require an amendment if the licensee changes the address of use. For example, an amendment would be required if the licensee initiates use or storage of byproduct material at a new physical location that is under its control.

Section 35.14, Notifications, would be revised. Paragraph (a) would be revised to include a requirement for the licensee to notify NRC no later than 30 days after the date the licensee permits an individual to work as an authorized medical physicist pursuant to § 35.13(b). Paragraph (b) would be revised to require that the licensee notify NRC when an authorized medical physicist permanently discontinues performance of duties under the license. Paragraph (b) would also be revised to require that a licensee notify NRC when the licensee changes its name. This provision applies only if there is no change in ownership, as described in § 30.34 of this chapter. Otherwise, the licensee must take appropriate action to have its license amended prior to such change in ownership. A licensee must also notify NRC of any changes in areas where materials are used pursuant to §§ 35.100 and 35.200. These revisions were warranted because of requirements in the proposed § 35.13.

Section 35.15, Exemptions regarding Type A specific licenses of broad scope, would be revised to add the term ''authorized medical physicist'' to paragraph (d). This revision is needed because of the requirements in the proposed § 35.13. Under this proposed section, broad scope licensees would have authority to appoint authorized users, authorized nuclear pharmacists, or authorized medical physicists without notifying NRC, provided the individuals meet approved criteria in subparts B, D-H, and J.

A new paragraph (e) would be added to also exempt these licensees from § 35.49(a). This change would codify in the regulations an exemption that is currently provided to these licensees through a standard condition. NRC's medical use licensees with a Type A specific license of broad scope currently receive a standard license condition that exempts the licensee from receiving sealed sources or devices manufactured only from licensees with medical distribution licenses issued pursuant to § 32.74. This change would replace the license condition.

Section 35.18, License issuance, would be revised. Requirements for a mobile service license would be added as paragraph (b). The NRC will issue a license for mobile service if the applicant meets the requirements specified in paragraph (a) of the section and if the individual or human research subject to whom the applicant administers byproduct material, or radiation from byproduct material, may be released following treatment in accordance with § 35.75. The later condition is necessary because mobile service licensees will not have the capability of controlling individuals that cannot be released pursuant to § 35.75.

Section 35.19, Specific exemptions, would be revised to delete the statement that the Commission will review requests for exemptions from training

and experience requirements with the assistance of its Advisory Committee on the Medical Uses of Isotopes. This statement is a matter of Commission policy rather than a regulatory requirement.

Subpart B, General Administrative Requirements, contains general administrative requirements regarding medical use of byproduct material.

Section 35.20, ALARA program, would be deleted in its entirety from Part 35. ALARA is discussed in 10 CFR 20.1101, ''Radiation protection programs,'' and medical licensees must comply with the requirements of that section. That section requires, in part, that a licensee develop, document, and implement a radiation protection program and use, to the extent practicable, procedures and engineering controls to achieve occupational doses and doses to members of the public ALARA. The Commission does not believe that § 35.20 is needed in light of the requirements in § 20.1101. A medical use licensee should have flexibility in developing and implementing a radiation protection program that meets the requirements of Part 20.

Section 35.21, Radiation Safety Officer, would be deleted in its entirety from Part 35. The requirements of paragraph (a) would be moved to the proposed § 35.24. Paragraph (b) would be deleted because it is overly prescriptive and in some cases overlaps with the requirements in § 20.1101. The Commission believes that the licensee should have the flexibility in developing, maintaining, and implementing its radiation protection program, including establishing the Radiation Safety Officer's duties.

Section 35.22, Radiation safety committee, would be deleted in its entirety. The issue of whether NRC should require a Radiation Safety Committee was identified as a cross-cutting issue and, therefore, was discussed at the public meetings and workshops held in Fall 1997. Comments received on this topic are discussed in Section III of the **SUPPLEMENTARY INFORMATION** section of this document. Based on the comments received prior to March 1, 1998, the Commission believes that key functions of the Radiation Safety Committee could be transferred to licensee management (reference proposed § 35.24) and that the prescriptive requirements in the current § 35.22 should be deleted. The Commission believes that many institutions will continue to use a Radiation Safety Committee to oversee use of radioactive material. However, it recognizes that radiation program oversight may be accomplished by other means. In particular, medical facilities normally have a number of committees examining various areas, such as environmental safety. These committees are typically formed in response to hospital accreditation requirements. Specifying responsibilities and functions to be accomplished, rather than the particular mechanism to be used, is an effort to afford licensees flexibility in achieving the objective of radiation safety (reference § 35.24).

Section 35.23, Statements of authority and responsibilities, would be deleted in its entirety and the requirements of this section, with minor modifications, would be moved to the proposed § 35.24.

Section 35.24, Authority and responsibilities for the radiation protection program, would appear as a new section. This requirement specifies objectives that must be achieved, rather than specifying how the objective is to be met, in an effort to afford licensees flexibility in achieving the objective of radiation safety.

Paragraphs (a) and (b) would replace the current requirements for the Radiation Safety Committee. The licensee is responsible for approving licensing actions; individuals before allowing them to work as a Radiation Safety Officer, authorized user, authorized nuclear pharmacist, or authorized medical physicist; and radiation protection program changes that do not require a license amendment.

The licensee must develop, implement, and maintain administrative procedures for interdepartmental/interdisciplinary coordination of the licensee's radiation protection program. Interdepartmental/interdisciplinary coordination is believed to be a major component of an effective radiation protection program. The Commission recognizes that there are many ways to meet this objective and believes that the licensee should have flexibility in identifying and implementing the most appropriate modes of coordination at its facility. Identified alternatives include, but are not limited to, meetings, electronic transfer of information, or verbal communication. This requirement applies to all medical use licensees and it is expected that the extent of the coordination will be dependent on the complexity of the licensee's program.

The requirement in paragraph (c) to appoint a Radiation Safety Officer is currently required by § 35.21. The proposed paragraph would require that the Radiation Safety Officer agree, in writing, to be responsible for implementing the radiation protection program. The requirements in paragraphs (d) and (e) are similar to the requirements in the current § 35.23. A record of management's approval of actions in paragraph (a); written acceptance of Radiation Safety Officer duties as specified in paragraph (c); and the duties, responsibilities, and authority of the Radiation Safety Officer specified in paragraph (d) would have to be maintained in accordance with § 35.2024, Records of authority and responsibility for radiation protection programs.

The Commission is soliciting specific public comment on changes made in the rule that could impact the licensee's effectiveness in carrying out its radiation protection program, e.g., proposed deletion of the requirement for a Radiation Safety Committee and proposed requirement for the Radiation Safety Officer to acknowledge, in writing, responsibility for implementing the radiation protection program. In particular, the Commission is seeking comment in the following areas: (1) whether this combination of changes in the proposed rule may actually reduce the effectiveness of radiation protection programs; and (2) whether the radiation safety officer will be provided appropriate tools and channels through which to raise safety concerns to the highest levels of management. Finally, if the requirement for a committee, to oversee the radiation protection program, was included in the final rule, the Commission is seeking comment on whether the rule language should explicitly require that the radiation safety officer be a member of that committee.

Section 35.25, Supervision, would be deleted in its entirety and the requirements of this section, with minor modifications, would be moved to the proposed § 35.27.

Section 35.26, Radiation protection program changes, would appear as a new section. The requirements in this section are similar to the requirements in the current § 35.31, which would be deleted. The proposed section states that a licensee may revise its radiation protection program without Commission approval if the revision does not require an amendment in accordance with § 35.13; the change will not reduce radiation protection; the change has been reviewed and approved in writing by the Radiation Safety Officer and licensee management; and the affected individuals have been instructed on the revised program before the changes are implemented. This requirement provides the licensees with flexibility to manage their radiation

protection programs and clearly defines the situations that will not require an amendment. The Commission believes that many licensees were reluctant to make changes to their current program because the term ''ministerial changes,'' as defined in the current § 35.2 and as used in the current § 35.31, was not clearly understood. This change is intended to provide clear guidance to a licensee on when it can revise its radiation protection program without Commission approval.

The Commission believes that it is important to instruct individuals in program changes, including those permitted under § 35.26, before they are implemented. This instruction could be provided in writing or orally and may be conducted on an informal or formal basis. It is not necessary to document that this training has been provided to affected parties, because these changes should not reduce radiation safety. At the time of inspection, NRC inspectors may question whether this training was provided.

Section 35.27, Supervision, would appear as a new section. The requirements in this section are similar to the requirements in the current § 35.25, which would be deleted. Paragraph (a)(1) and (b)(1) would be revised to delete the requirement to instruct individuals in the principles of radiation safety. This type of instruction is adequately addressed by § 19.12, Instructions to workers, of this chapter. Paragraph (a)(1) would also be revised to require that the licensee instruct supervised individuals in the written radiation protection procedures, written directives procedures, regulations of this chapter, and license conditions. Paragraph (a)(2) would require the supervised individual to follow the instructions of the supervising authorized user for medical uses of radioactive material, written radiation protection procedures, regulations, and license conditions with respect to the medical use of byproduct material. Paragraphs (a)(3) and (b)(3) of the current § 35.25 would be deleted because the licensee should have flexibility in evaluating employee performance. Paragraph (b)(2) would be revised to require supervised individuals to follow the instructions of the supervising authorized user or authorized nuclear pharmacist regarding the preparation of byproduct material for medical use, the written radiation protection procedures, and the regulations of this chapter and license conditions. Paragraph (c) would require that the licensee develop, implement, and maintain a policy for supervised individuals to request clarification, as needed, from the authorized user about instructions and requirements in a written directive prior to administering the byproduct material, or radiation from the byproduct material, and from the authorized user or authorized nuclear pharmacist about instructions and requirements provided in accordance with paragraphs (a) and (b) of the section. This change would be added so that a licensee's work environment would encourage supervised individuals to ask questions if they do not understand the instructions or requirements provided to them by an authorized nuclear pharmacist or an authorized user, especially when they have questions regarding administrations of byproduct material to patients or human research subjects. In the past, failure by licensee staff to ask questions has been identified as one of the key contributors to misadministrations.

Section 35.29, Administrative requirements that apply to the provision of mobile service, would be deleted. The conditions for the Commission to issue a mobile service license would be moved to § 35.18. The requirements in paragraphs (b) and (d) would be moved to the proposed § 35.80. Paragraph (c) would be deleted because this requirement was viewed as overly prescriptive. Individuals are required to comply with all provisions of the license that authorizes use, possession and transfer of material.

Section 35.31, Radiation safety program changes, would be deleted. The requirements, with minor changes, would be moved to § 35.26. This change is proposed so that all requirements that pertain to the management of the licensee's program appear in one area.

Section 35.32, Quality management program, would be deleted. The issue of whether the Commission should continue to require that a licensee develop, implement, and maintain a quality management program was identified as a cross-cutting issue and was discussed at the public meetings and workshops held in Fall 1997. Comments received on this topic are discussed in Section III of the Supplementary Information section of this document. Based on these comments, the Commission has deleted the requirements for a quality management program. However, the Commission believes there are three elements of the current quality management program that should be addressed in the proposed rule: confirming patient identity, requiring written directives, and verifying dose. Requirements for these three elements are found in proposed §§ 35.40 and 35.41. However, the Commission believes that some elements of the current quality management program requirements will continue to be implemented as a part of the ''standard of care'' in medicine. In this regard, the Commission acknowledges that other factors, such as accreditation, have resulted in medical institutions to adopting programs similar to those previously specified in the rule.

Section 35.33, Notifications, reports, and records of misadministrations, would be deleted. In this proposed revision, recordkeeping and reporting requirements contained in Part 35 would be moved to subparts L and M, respectively.

Section 35.40, Written directives, would appear as a new section. This section contains requirements for preparation of written directives. These requirements are similar to the requirements in the current §§ 35.2 and 35.32. Minor changes would be made in the information that must be placed in a written directive for gamma stereotactic radiosurgery, remote afterloaders, and brachytherapy. These changes were based on comments received during public meetings of the Part 35 Working Group.

Section 35.41, Procedures for administrations requiring a written directive, would appear as a new section. It would require the licensee to develop, implement, and maintain written procedures to assure that, before each administration, the patient's or human research subject's identity is verified and that each administration is in accordance with the written directive, including verification of dose. It would also specify the objectives that should be addressed in the procedures. The specific details to be included in the written directives are in § 35.40. The topics identified in § 35.41 are viewed by the Commission as key elements of a program that will provide high confidence that byproduct material will be administered as directed by the authorized user. However, the regulations are not prescriptive as to how these objectives are met, allowing licensees the flexibility to develop procedures to meet their needs. There is no requirement for submittal or approval of the procedures as was previously required by the quality management rule.

Section 35.49, Suppliers for sealed sources or devices for medical use, would be unchanged.

Requirements in the current § 35.50, with minor modifications, would be moved to the proposed § 35.60.

Section 35.50, Training for Radiation Safety Officer, would appear as a new

section that would revise the current requirements of § 35.900, Radiation Safety Officer. Section III of the Supplementary Information of this document contains a detailed discussion of the Commission's proposed changes to the training and experience requirements in Part 35. Note, 2 years after the final rule is published in the **Federal Register**, this section would replace the current requirements in § 35.900, Radiation Safety Officer.

Requirements in the current § 35.51, with minor modifications, would be moved to the proposed § 35.61.

Section 35.51, Training for an authorized medical physicist, would appear as a new section that would revise the training and experience requirements found in § 35.961, Training for an authorized medical physicist. Section III of the Supplementary Information section of this document contains a detailed discussion of the Commission's proposed changes to the training and experience requirements in Part 35. Note, 2 years after the final rule is published in the **Federal Register**, this section would replace the requirements in § 35.961, Training for authorized medical physicist.

Section 35.52, Possession, use, calibration, and check of instruments to measure dosages of alpha- or beta-emitting radionuclides, would be deleted in its entirely and the requirements of this section, with minor modifications, would be moved to the proposed § 35.63.

Section 35.53, Measurements of dosages of unsealed byproduct material for medical use, would be deleted in its entirety and the requirements of this section, with minor modifications, would be moved to the proposed § 35.63.

Section 35.55, Training for an authorized nuclear pharmacist, would appear as a new section that would revise the training and experience requirements found in § 35.980, Training for an authorized nuclear pharmacist. Section III of the **SUPPLEMENTARY INFORMATION** section of this document contains a detailed discussion of the Commission's proposed changes to the training and experience requirements in Part 35. Note, 2 years after publication in the **Federal Register**, this section would replace the current requirements in § 35.980, Training for an authorized nuclear pharmacist.

Requirements in the current § 35.57, with minor modifications, would be moved to the proposed § 35.65.

Section 35.57, Training for an experienced Radiation Safety Officer, teletherapy or medical physicist, authorized user, and nuclear pharmacist, would appear as a new section that would replace the current requirements in §§ 35.901, 35.970, and 35.981, which would be deleted. Changes would be made in the regulatory text of this section to reflect the effective date of the rule.

Requirements in the current § 35.59, with minor modifications, would be moved to the proposed § 35.67.

Section 35.59, Recentness of training, would appear as a new section that would replace the current requirements in § 35.972. Although this is not a new requirement, questions have recently been raised regarding whether all elements of the requirements must have been obtained in the last 7 years. It is expected that either the individual has been board certified or has completed the training specified in the alternative pathway within the 7 years preceding the date of the application or must have had related continuing education and experience since completing the required training and experience requirements. Continuing education is reviewed on a case-by-case basis. The text has been revised to reference subparts B, D, E, F, G, H and J since training and experience requirements appear in multiple subparts.

Subpart C, General Technical Requirements, contains general technical requirements regarding medical use of byproduct material.

Requirements in the current § 35.60, with minor modifications, would be moved to the proposed § 35.69.

Section 35.60, Possession, use, calibration, and check of instruments to measure activity of photon-emitting radionuclides, would appear as a new section that would replace the current § 35.50. This section addresses calibration of all instruments used to measure the activity of photon-emitting radionuclides, rather than only dose calibrators. The change recognizes that there are various types of instruments that can be used to measure the activity of photon-emitting radionuclides.

The proposed rule would require that licensees develop, implement, and maintain procedures for use of the instrumentation. Licensees would be required to calibrate all instruments used to measure the activity of photon-emitting radionuclides.

Licensees would be required by the proposed § 35.63 to determine the activity of each dosage before medical use. If a licensee uses only unit dosages of radiopharmaceuticals, § 35.63 would allow the licensee to determine the dosage by a decay correction based on the measurement by a manufacturer or preparer licensed pursuant to § 32.72 or equivalent Agreement State. If a licensee chooses to determine the dosage using this method, it would not be necessary for the licensee to possess instrumentation to measure the activity of the photon-emitter. In this case, the licensee would not be required to comply with this section. If, however, a licensee chooses to re-assay a unit dosage to either confirm the activity or for the purpose of adjusting the dosage, the licensee must comply with this section. This requirement is appropriate because confirmation of a dosage, or adjustment of dosages, must be made based on properly-calibrated equipment.

Many of the prescriptive requirements for calibration would be deleted from the current requirements in § 35.50. The requirements that would remain are viewed by the Commission as essential elements of a calibration program and are generally consistent with the recommendations of ANSI N42.13–1986 (R 1993), ''Calibration and Usage of Dose Calibrator Ionization Chambers for the Assay of Radionuclides.'' Licensees would be required to perform accuracy, linearity, and geometry dependence tests before initial use and following repair; perform accuracy tests annually; perform linearity tests annually over the range of medical use; and check constancy and proper operation at the beginning of each day of use. Note, it would not be necessary to test for linearity for all activities that might be measured, e.g., the first elution from a fresh generator or a multidose vial, because this would subject the worker to an unnecessary radiation dose. Paragraph (c) would require that accuracy tests be performed using a source with a principle photon energy of between 100 and 500 keV whose activity is traceable to the National Institutes of Standards and Technology (NIST). The allowance for a licensee to mathematically correct dosage has been revised to raise the level for correction to 30 μCi to make the level consistent with § 35.63. The allowance for a licensee to mathematically correct dosage readings remains, but has been re-numbered § 35.60(d). The recordkeeping requirements for this section would appear in § 35.2060, Records of instrument calibrations.

Requirements in the current § 35.61, with minor modifications, would be moved to the proposed § 35.69.

Section 35.61, Calibration and check of survey instruments, would appear as a new section that would replace the current § 35.51. The requirement in the current § 35.51(a)(3) to note the

apparent exposure rate from a dedicated check source, as determined at the time of calibration, and the daily check source requirement in paragraph (c) would be deleted. These changes would give the licensee greater flexibility in instrument calibrations. Paragraph (b) would require that the licensee attach a correction chart or graph to the instrument if the indicated exposure rate differs from the calculated exposure rate by more than 10 percent. Paragraph (c) would require that survey instruments be removed from use if the indicated exposure rate differs from the calculated exposure rate by more than 20 percent. Previously, there was no threshold for attaching a correction chart or for removing instruments from use. The requirements in this section are generally consistent with ANSI N323–1978 (R 1993), ''Radiation Protection Instrumentation Test and Calibration.'' The recordkeeping requirements for this section would appear in § 35.2061, Records of radiation survey instrument calibrations.

Section 35.62, Possession, use, calibration, and check of instruments to measure dosages of alpha- or beta-emitting radionuclides, would appear as a new section that would replace the current § 35.52. This section addresses calibration of all instruments used to measure the activity of alpha- or beta-emitting radionuclides. Paragraph (a) from the current § 35.52 would be deleted. This text is no longer needed since the term ''unit dosage'' has been defined in § 35.2. The new paragraph (b) would require that a licensee develop, implement, and maintain written procedures for use of the instrumentation. The Commission recognizes that it may not be possible to test linearity and geometry dependency on all instrumentation. However, the Commission believes that all instruments used to measure alpha- or beta-emitting radionuclides can be tested for accuracy or constancy. The new paragraph (c) would require that accuracy tests be performed using sources whose activity is traceable to NIST. The recordkeeping requirements for this section would appear in § 35.2060, Records of instrument calibrations.

Section 35.63, Determination of dosages of unsealed byproduct material for medical use, would appear as a new section that would replace the current § 35.53. This section would require licensees to determine and record the activity of each dosage before medical use. For unit dosages of an alpha-, beta-, or photon-emitting radionuclides, this determination must be made either by direct measurement or by a decay correction, based on the measurement made by a manufacturer or preparer licensed pursuant to § 32.72 or equivalent Agreement State requirements. For other than unit doses, a licensee may determine the dosage by direct measurement or by combination of measurements and calculations. Previously, photon measurements could only be made by direct measurement. This action allows licensees flexibility in determining dosages and does not distinguish between the type of the radiation (e.g., alpha, beta, or photon) and the way the determination is made. Paragraph (d) would not permit a licensee to use a dosage if it differed from the prescribed dosage by more than 20 percent. This change would codify requirements that are currently imposed on licensees by license conditions. This does not prevent an authorized user from revising the prescribed dosage at any time prior to the administration. The recordkeeping requirements for this section would appear in § 35.2063, Records of dosage measurements.

Section 35.65, Authorization for calibration and reference sources, would appear as a new section that would replace the current § 35.57. The references in the current § 35.57, to §§ 35.100 and 35.200, would be deleted because specific radionuclides were not listed in these sections. Paragraph (b) in the current § 35.57 would be revised to extend the half-life from 100 days to 120 days to be consistent with the financial assurance regulations in 10 CFR Part 30. The limit of 10^{-3} would be added to the regulation to allow receipt, possession, and use of radionuclides in quantities that do not exceed the limits requiring financial assurance. The possession limit for Tc-99m would be deleted. The Commission believes that it is not necessary to limit the possession of Tc-99m for calibration and reference sources because there are no possession limits for Tc-99m associated with use of Tc-99m pursuant to §§ 35.100 or 35.200.

Section 35.67, Requirements for possession of sealed sources and brachytherapy sources, would appear as a new section that would replace the current § 35.59. Paragraph (b) would require that a source be tested for leakage before its first use, unless the licensee has a certificate from the supplier indicating that the source was tested within 6 months, and the source is tested for leakage at intervals not to exceed 6 months or at other intervals approved in the Sealed Source and Device Registry (SSDR).[1] The SSDR certificates, in most cases, will include a requirement for leak-testing. Approved intervals for testing are based on information regarding source design construction that is provided by the manufacturer.

Prescriptive requirements in the current § 35.59(c) would be deleted to reflect the risk-informed, performance-based nature of this proposed rule. Paragraph (d) would require that leak test records be maintained in accordance with § 35.2067, Records of possession of sealed sources and brachytherapy sources. Paragraph (e) would be revised to give the licensee two additional alternatives for action after a leaking source has been identified. The proposed rule would allow the licensee the added flexibility of repairing or disposing of the source, in accordance with 10 CFR parts 20 and 30, if the leakage test reveals the presence of 185 Becquerels (Bq) (0.005 microcuries) or more of removable contamination. The current rule only allows the licensee to withdraw the sealed source from use and store it in accordance with the requirements in 10 CFR parts 20 and 30. The licensee would still be required to report to NRC if a leakage test reveals the presence of 0.005 microcuries or more of removable contamination. Reporting requirements for this section would appear in § 35.3059, Reports of leaking sources.

Paragraph (g) of the current rule would be revised to change the frequency for source inventories from quarterly to semi-annually, to reduce the regulatory burden on licensees. It does not, however, preclude the licensee from conducting an inventory on a more frequent basis. Paragraph (h) of the current rule would be deleted because radiation surveys are addressed under 10 CFR Part 20. The recordkeeping requirements for this section would appear in § 35.2067, Records of possession of sealed sources and brachytherapy sources.

Section 35.69, Labeling and shielding of vials and syringes, would appear as a new section that would replace the current §§ 35.60 and 35.61. It would require licensees to develop, implement, and maintain procedures for labeling and shielding radiopharmaceuticals and instruct individuals in those procedures. Procedures must ensure that a syringe, syringe shield, or vial shield is conspicuously labeled as containing radioactive material and is labeled with the radiopharmaceutical

[1] A national registry that contains all the registration certificates generated by both NRC and the Agreement States. Registration certificates summarize the radiation safety information submitted by the applicant, and describe the licensing and use conditions approved for the product.

name. These requirements were needed because the Commission does not believe that the labeling and shielding requirements in Part 20 are sufficient to ensure that syringes, syringe shields, or vial shields are properly labeled to identify radioactive contents. In addition, the Commission believes that labeling helps to reduce administration errors. The proposed rule would require that licensees instruct individuals, commensurate with that individual's assigned duties, on the labeling and shielding procedures. It is expected that technologists preparing radiopharmaceuticals and nuclear pharmacists will be given instruction in the licensee's procedures. Records of instructions would not be required to be maintained.

Section 35.70 would be retitled, Surveys for ambient radiation exposure rate, and revised. The proposed rule would require that licensees survey, at the end of each day of use, all areas where radiopharmaceuticals requiring a written directive were prepared for use or administered with an appropriate radiation detection survey instrument unless the material was prepared for use or administered in an area where patients or human research subjects could not be released pursuant to § 35.75. All other requirements in this section would be deleted. Licensees are required to show compliance with the public and occupational dose limits specified in Part 20 of this chapter and specifically to develop, document, and implement a radiation protection program commensurate with the scope and extent of licensed activities (10 CFR 20.1101). In situations where radioactive material was used at levels that would not have required a survey pursuant to this section, the licensee should be aware that a survey may be required by § 20.1501, General. Maintaining the requirement for surveys in areas where radiopharmaceuticals requiring a written directive are used is consistent with the Commission direction for a risk-informed rule. The Commission believes that licensees will continue to perform radiation surveys as dictated by ''good health physics'' practices. Recordkeeping requirements for this section would appear in § 35.2070, Records of surveys for ambient radiation exposure rate.

Section 35.75 would be retitled, Release of individuals containing radiopharmaceuticals or implants, and revised. The title of the section and paragraph (a) would be revised to delete the term ''permanent.'' This was done to clarify that this section applies to all individuals released from licensee control. Paragraph (b) would be revised to specify that licensees may provide instructions to either the released individual or to the individual's parent or guardian and to replace the term ''dose'' with the term ''total effective dose equivalent.'' The first change acknowledges that, in some cases, it is not appropriate to provide the individual being released with instructions (e.g., the individual is a minor or incapable of understanding the instructions). The later term was changed to clarify what was intended by ''dose.''

Paragraph (b)(2) would be modified to state ''potential consequences, if any,'' of failure to follow the guidance. The Commission recognizes that, at low doses, there may be no consequences to continued breast-feeding. A patient may be unnecessarily alarmed if he/she is provided with information on consequences. Therefore, if consequences are not anticipated, the licensee would not be required to provide information to the individual. The Commission has recently received comments from the public on the provisions in § 35.75 at the public workshops and in writing. Professional societies and representatives of the Agreement States have expressed concerns about the release criteria in § 35.75. It is believed that the new criteria permit the release of patients with a body burden of as much as several hundred millicuries of I–131. Commenters believed that the released individual is a ''leaking-source'' that creates a contamination and exposure problem that extends beyond the control of the licensee. There is concern that pressure from those paying for such medical procedures will undermine the Radiation Safety Officer's ability to protect the public health and safety and to control contamination within the medical facility. In addition, there is concern about the recent increase of radiation alarms going off at landfills caused by household trash from a released patient. As a result of these concerns, the Commission is specifically soliciting public comment on whether any changes need to be made to the release criteria in this rule. The recordkeeping requirements for this section would appear in § 35.3075, Records of the release of individuals containing radiopharmaceuticals or implants.

Section 35.80 would be retitled, Provision of mobile service, and revised. The title would be changed to make it clear that the provisions in this part apply to all mobile services and not just to mobile nuclear medicine services. Current paragraphs (a), (b), and (c) would be deleted because radiopharmaceutical usage is limited by the requirements in §§ 35.100 and 35.200, and control and security of material are addressed in 10 CFR Part 20.

Proposed paragraph (a) would require the mobile service provider to obtain a letter from its client, which permits the use of byproduct material at the client's address of use and that clearly delineates the authority and responsibility of each entity. Paragraph (c) would require that the mobile service provider check instruments for proper function, as described in §§ 35.60 and 35.62, before use at each address of use or on each day of use, whichever is more frequent. For example, if a mobile service licensee provides service to more than one client in a day, the instruments would need to be checked at each client's address of use. The Commission recognizes that the standard of practice is to check other types of equipment, such as gamma cameras, for proper operation at each place of use. Therefore, the Commission has not included any requirements to check this type of equipment in the proposed rule. Currently, mobile nuclear medicine services may be required by license conditions to check gamma camera operation.

Based on discussions with the States, this section is designated as a Category D item of compatibility since there is no potential for medical use of byproduct material in other regulatory jurisdictions under reciprocity. NRC specifically requests comment on this issue relative to whether mobile medical licensees operate under reciprocity in other regulatory jurisdictions.

Paragraph (d) would require that the licensee check survey instruments for proper operation with a dedicated check source, before use, at each address of use. The NRC staff believes this is appropriate because extensive movement in a transport vehicle may cause the instruments to become damaged or uncalibrated. Paragraph (e) would be revised to require a licensee to survey all areas of use to comply with the dose limits in 10 CFR Part 20 before leaving each client's address of use. This is necessary to assure that all radioactive material is removed from a client's facility. Recordkeeping requirements for this section would appear in § 35.2080, Records of administration and technical requirements that apply to the provision of mobile services.

Section 35.90, Storage of volatiles and gases, would be deleted in its entirety. Licensees are required to comply with the public and occupational public dose limits in 10 CFR Part 20 and to maintain

exposures ALARA. The Commission believes that licensees should have flexibility in complying with 10 CFR Part 20, and, therefore, a prescriptive requirement in Part 35 is not needed.

Section 35.92, Decay-in-storage, would be revised to allow decay in storage for byproduct material with a physical half-life of less than 120 days. If a licensee would like to decay material with a physical half life greater than 120 days, it would have to apply for and receive an amendment that would permit the decay-in-storage.

The current Part 35 only permits decay-in-storage for materials with a half-life of less than 65 days. This change provides licensees with greater flexibility in handling radioactive waste. NRC has received multiple requests to amend licenses to allow for decay-in-storage for materials greater than 65 days, and NRC has amended licenses to allow for decay-in-storage for materials with half-lives up to 120 days. This revision to § 35.92 would codify current licensing practice.

The requirement in the current paragraph (a)(1) to hold byproduct material for 10 half-lives would be deleted. This requirement is not needed in light of the requirement in paragraph (a) that precludes disposal of radioactive material as ordinary trash until radiation levels adjacent to the material do not exceed background levels. The Commission is soliciting specific public comment on whether this provision should be deleted. Concerns have been raised regarding licensees' ability to detect low levels of some beta-emitters such as sulfur-35. In this case, the requirement to hold material for 10 half-lives provides added assurance that material has decayed to background levels prior to release.

The requirement in paragraph (a)(4) to separate and monitor each generator column would be deleted. This level of prescriptiveness is not warranted in light of the requirements in paragraph (a)(1). The recordkeeping requirements for this section would appear in § 35.2092, Records of waste disposal.

Subpart D would be retitled Unsealed Byproduct Material—Low Dose. This subpart would combine the requirements in the current subpart D, Uptake, dilution, and excretion and subpart E, Imaging and localization. This change is consistent with the Commission's intent to make Part 35 modality specific where appropriate.

Section 35.100 would be retitled, Use of unsealed byproduct material for uptake, dilution, and excretion studies for which a written directive is not required, and revised. The title would be changed to clearly state that the provisions in this subpart do not apply to the medical use of byproduct material that would require a written directive. Changes would be made to paragraph (b) to reflect the renumbering of sections in the proposed rule.

Section 35.120, Possession of survey instruments, would be deleted because these specific requirements are not needed in Part 35. Section 20.1501 of this chapter requires that the licensee make, or cause to be made, surveys to demonstrate compliance with 10 CFR Part 20, and requires the licensee to ensure that instruments and equipment used to show compliance with Part 20 are periodically calibrated. In addition, § 30.33(a)(2) of this chapter requires licensee to have adequate instrumentation. Information on the types of instruments recommended for medical licensees is available in draft NUREG–1556, Vol. 9.

Section 35.200 would be retitled, Use of unsealed byproduct material for imaging and localization studies for which a written directive is not required, and revised. The title would be changed to clearly state that the provisions in this part do not apply to the medical use of byproduct material that would require a written directive. Changes would be made to paragraph (b) to reflect the renumbering of sections in the proposed rule.

Section 35.204, Permissible molybdenum-99 concentration, would be revised. Paragraph (b) would be revised to require that a licensee measure the molybdenum-99 concentration of only the first eluate from a generator. The Commission recognizes that the industry standard for molybdenum breakthrough is specified in the United States Pharmacopia (USP) 23 U.S. Pharmacopial Convention, Inc., 1994, page 486–487. The Commission believes that the licensee should measure the molybdenum-99 concentration in the first elution of a generator after the generator is received at the licensee's facility. Although the frequency of molybdenum breakthrough is exceedingly rare, an initial check may detect generators that have been damaged in transport. The term ''extract'' was deleted because the term is no longer needed. NRC is not aware of any licensees that prepare technetium-99m by the solvent extraction method. The recordkeeping requirements for this section would appear in § 35.2204, Records of molybdenum-99 concentration.

Section 35.205, Control of aerosols and gases, would be deleted in its entirety. Part 35 licensees must comply with the occupational and public dose limits of 10 CFR Part 20. Additional prescriptive requirements for limiting airborne concentrations of radioactive material are not warranted in Part 35.

Section 35.220, Possession of survey instruments, would be deleted in its entirety because specific requirements are not needed in Part 35. Section 20.1501 of this chapter requires that the licensee make, or cause to be made, surveys to demonstrate compliance with 10 CFR Part 20, and requires the licensee to ensure that instruments and equipment used to show compliance with 10 CFR Part 20 are periodically calibrated. In addition, § 30.33(a)(2) of this chapter requires licensees to have adequate instrumentation. Information on the types of instruments recommended for medical licensees is available in draft NUREG–1556, Vol. 9.

Section 35.290, Training for uptake, dilution, and excretion studies, would appear as a new section that would revise the training and experience requirements found in § 35.910, Training for uptake, dilution, and excretion studies. Section III of the **SUPPLEMENTARY INFORMATION** section of this document contains a detailed discussion of the Commission's proposed changes to the training and experience requirements in Part 35. Note, 2 years after publication of the final rule, this section would replace the current requirements in § 35.920, Training for uptake, dilution, and excretion studies.

Section 35.292, Training for imaging and localization studies, would appear as a new section that would revise the training and experience requirements found in § 35.920, Training for imaging and localization studies. Section III of the **SUPPLEMENTARY INFORMATION** section of this document contains a detailed discussion of the Commission's proposed changes to the training and experience requirements in Part 35. Note, 2 years after publication of the final rule, this section would replace the current requirements in § 35.920, Training for imaging and localization studies.

Subpart E would be retitled, Unsealed byproduct material—high dose. The subpart contains the requirements for any medical use of unsealed byproduct material for which a written directive is required. This subpart would replace the requirements in the current subpart F, Radiopharmaceuticals for therapy.

Section 35.300 would be retitled, Use of unsealed byproduct material for which a written directive is required, and revised. The title would be changed to clearly state that the provisions in this subpart apply to the medical use of unsealed byproduct material that would require a written directive. Changes

would be made to paragraph (b) to reflect the renumbering of sections in the proposed rule.

Section 35.310, Safety instruction, would be revised to explicitly state that the instruction requirements of this section are in addition to, and not in lieu of, the training requirements in 10 CFR 19.12. The Commission believes that it is important that personnel caring for patients or human research subjects that have received radiopharmaceutical therapy (and cannot be released in accordance with § 35.75) receive instruction in limiting radiation exposure to the public or occupational workers and the actions to be taken in the case of a death or medical emergency. The proposed rule would require that safety instruction be provided initially and at least annually. Instruction topics are specific to medical use of unsealed radiopharmaceuticals. It is not expected that the same level of training be provided to all individuals caring for the patient. The level of training should be commensurate with the type of care that the personnel may render to the patient or human research subject. For example, the instruction provided to the registered nurse will not necessarily be the same as the instruction provided to a nursing assistant.

Paragraph (a) would be revised to require that instruction on visitor control include instruction on routine visitation authorized under the provisions in § 20.1301(a)(1), as well as visitation that is authorized under the proposed provisions of § 20.1301(a)(3). Paragraph (a) would also be revised to state that personnel should notify the authorized user and Radiation Safety Officer, or his/her designee, if the patient or human research subject dies or has a medical emergency. The recordkeeping requirements for this section would appear in § 35.2310, Records of instruction and training.

Section 35.315, Safety precautions, would be revised. Paragraph (a) would be revised to clarify that the requirements in this section only apply if a patient has been confined pursuant to § 35.75. Paragraph (a)(2) would be revised to require that the patient's room, rather than the door, be visibly posted to give the licensee some flexibility in determining where to place the posting. These requirements are in addition to the posting requirements in 10 CFR Part 20. The Commission believes that posting requirements in 10 CFR Part 20 are not adequate to ensure that individuals entering the room would be aware of the presence of radioactive materials in the room. The current requirements in paragraphs (a)(3), (4), (6), (7), and (8) would be deleted because they are radiation protection requirements that are covered under 10 CFR Part 20. Paragraph (b) would be revised to state that personnel should notify the authorized user and the Radiation Safety Officer, or his/her designee, as soon as possible, if the patient or human research subject dies or has a medical emergency. This change was made to recognize that the licensee's primary responsibility is the care of the patient and to provide the Radiation Safety Officer flexibility in designating who should be notified to address radiation protection issues.

The Commission is soliciting specific comments on whether the requirement for a private room with a private sanitary facility in paragraph (a)(1) should be maintained in the final rule.

Section 35.320, Possession of survey instruments, would be deleted in its entirety because these specific requirements are not needed in Part 35. Section 20.1501 of this chapter requires that the licensee make or cause to be made surveys to demonstrate compliance with 10 CFR Part 20 and requires the licensee to ensure that instruments and equipment used to show compliance with Part 20 are periodically calibrated. In addition, 10 CFR 30.33(a)(2) requires a licensee to have adequate instrumentation. Information on the types of instruments recommended for medical licensees is available in draft NUREG–1556, Vol. 9.

Section 35.390, Training for therapeutic use of unsealed byproduct material, would appear as a new section that would revise the training and experience requirements found in § 35.930, Training for therapeutic use of unsealed byproduct material, and subsumes the training requirements for treatment of hyperthyroidism and treatment of thyroid carcinoma. Section III of the **SUPPLEMENTARY INFORMATION** section of this document contains a detailed discussion of the Commission's proposed changes to the training and experience requirements in Part 35. Note, 2 years after publication of the final rule, this section would replace the current requirements in § 35.930, Training for therapeutic use of unsealed byproduct material, § 35.932, Training for treatment of hyperthyroidism, and § 35.934, Training for treatment of thyroid carcinoma.

Subpart F would be retitled Manual brachytherapy. This subpart contains the requirements for medical use of sealed sources for manual brachytherapy and replaces the requirements in the current subpart G, Sources for brachytherapy.

Section 35.400 would be retitled, Use of sources for manual brachytherapy, and revised to delete the specific sources and uses listed in the current paragraphs (a) through (g). This conforms with the risk-informed, performance-based nature of this proposed rule. The licensee would have the flexibility to use sealed sources for therapeutic medical uses as approved in the Sealed Source and Device Registry.

Section 35.404 would be retitled, Radiation surveys of patients or human research subjects treated with implants, and revised. Paragraph (a) would be revised to delete the requirement that a licensee may not release a patient or a human research subject treated by temporary implant until all sources have been removed and would be retitled paragraph (b). Release of patients or human research subjects is addressed in § 35.75. The proposed paragraph (a) contains requirements that were previously required by § 35.406(c) with one modification. Licensees would be required to survey adjacent areas of use. This change was done to group radiation survey requirements. The recordkeeping requirements for this section would appear in § 35.2404, Records of radiation surveys of patients and human research subjects.

Section 35.406, Brachytherapy sources inventory, would be revised. Paragraph (a) requires that the licensee maintain accountability for all brachytherapy sources in storage or use. The majority of the prescriptive requirements and associated recordkeeping requirements in the current section would be deleted to give the licensee flexibility in program management. The requirements in paragraph (c) would be moved to the proposed § 35.404. The Commission believes that the requirements that were maintained are essential to the radiation safety program. The recordkeeping requirements for this section would appear in § 35.2406, Records of brachytherapy source inventory.

Section 35.410, Safety instruction, would be revised to explicitly state that the instruction requirements in this section are in addition to, and not in lieu of, the training requirements of 10 CFR 19.12. The Commission believes that it is important that personnel caring for patients or human research subjects, that have received implant therapy and cannot be released in accordance with § 35.75, receive instruction in limiting radiation exposure to the public and workers and the actions to be taken in the case of a death or medical emergency. The proposed rule would require that safety instruction be provided initially and at least annually.

Instruction topics are specific to medical use of manual brachytherapy sources. It is not expected that the same level of training be provided to all individuals caring for the patient. The level of training should be commensurate with the type of care that the personnel may render to the patient or human research subject. Paragraph (a) would be revised to require that instruction on visitor control include instruction on routine visitation authorized under the provisions in the current § 20.1301(a)(1), as well as visitation that is authorized under the provisions of revised § 20.1301(a)(3). Paragraph (a) would also be revised to state that personnel should notify the authorized user and Radiation Safety Officer, or designee, if the patient or human research subject dies or has a medical emergency. The recordkeeping requirements for this section would appear in § 35.2310, Records of instruction and training.

Section 35.415, Safety precautions, would be revised. Paragraph (a) would be revised to clarify that the requirements in this section apply only if a patient or human research subject cannot be released pursuant to § 35.75. The current requirements in paragraphs (a)(3) and (4) would be deleted because they are radiation protection requirements that are covered under 10 CFR Part 20. A new requirement would be added (paragraph b) to require the licensee to have equipment such as shields and remote handling tools available near each treatment room. This change codifies requirements that are currently imposed on licensees by license conditions. Current paragraph (b) would be redesignated paragraph (c) and would be revised to state that personnel should notify the authorized user and the Radiation Safety Officer, or his/her designee, as soon as possible if the patient or human research subject dies or has a medical emergency. This change was made to recognize that the licensee's primary responsibility is the care of the patient and to provide the Radiation Safety Officer flexibility in who should be notified to address radiation protection issues. The Commission is soliciting public comment on whether the requirement for a licensee to not quarter a patient in the same room as an individual who is not receiving radiation therapy be maintained in the final rule.

Section 35.420, Possession of survey instruments, would be deleted in its entirety because these specific requirements are not needed in Part 35. Section 20.1501 of this chapter requires that the licensee make, or cause to be made, surveys to demonstrate compliance with 10 CFR Part 20, and requires the licensee to ensure that instruments and equipment used to show compliance with Part 20 are periodically calibrated. In addition, 10 CFR 30.33(a)(2) requires licensees to have adequate equipment. Information on the types of instruments recommended for medical licensees is available in draft NUREG–1556, Vol. 9.

Section 35.432, Full calibration measurements of brachytherapy sources, would appear as a new section that would require a licensee authorized to use brachytherapy sources for medical use to perform full calibration measurements on brachytherapy sources before the first medical use. The requirements in this section are based on recommendations found in American Association of Physicists in Medicine (AAPM) Task Group 40—Comprehensive QA for Radiation Oncology (1994) and 56—Code of Practice for Brachytherapy Physics (1997), and are consistent with the calibration requirements for sealed sources and devices for therapy. The proposed rule would allow the licensee to rely on the output measurement provided by the manufacturer or distributor. The Commission is soliciting specific comment on whether the final rule should contain a requirement for the licensee to perform full calibration measurements on brachytherapy sources before first use and on whether the final rule should allow licensees to rely on the output measurements provided by the manufacturer or distributor provided the dosimetry equipment used by the manufacturer or distributor met the calibration requirements in § 35.630. In addition, the Commission is soliciting specific public comment on calibration for sources where there is no standard traceable to the National Institute of Standards and Technology (e.g. palladium-103).

The Regulatory Analysis for this section of the proposed rule assumes that the majority of licensees using long-lived radionuclides will need to calibrate the sources to show compliance with this section. It is estimated that licensees will spend approximately $1000 to calibrate these sources resulting in a $8M burden on NRC and Agreement State licensees. The Commission has not calculated the impact of determining the output of short-lived sealed therapy sources (e.g. iodine-125, iridium-192) because of the limited information available on the number of sources and variability in the type of dosimeter equipment available at a licensee's facility to perform the calibration. The Commission is soliciting specific public input on the number of short and long-lived sources that will need to be calibrated on an annual basis; whether licensees will need to procure additional equipment to perform the calibrations; and the time needed to calibrate the sources.

Recordkeeping requirements for this section would appear in § 35.2432, Records of full calibrations on brachytherapy sources.

Section 35.490, Training for use of manual brachytherapy sources, would appear as a new section that would revise the training and experience requirements found in § 35.940, Training for use of brachytherapy sources, and subsumes the requirements for training for ophthalmic use of strontium-90. Section III of the **SUPPLEMENTARY INFORMATION** section of this document contains a detailed discussion of the Commission's proposed changes to the training and experience requirements in Part 35. Note, 2 years after publication of the final rule, this section will replace the current requirements in § 35.940, Training for use of brachytherapy and in § 35.941, Training for ophthalmic use of strontium-90.

Subpart G would be retitled Sealed sources for diagnosis. This subpart would contain the requirements for diagnostic medical use of sealed sources and replace the requirements in the current subpart H, Sealed Sources for Diagnosis.

Section 35.500, Use of sealed sources for diagnosis, would be revised to delete the specific sources and uses listed in paragraphs (a) and (b). This conforms with the risk-informed, performance-based nature of this proposed rule. The licensee would have flexibility to use sealed sources for diagnostic medical uses as approved in the Sealed Source and Device Registry.

Section 35.520, Availability of survey instruments, would be deleted in its entirety because these specific requirements are not needed in Part 35. Section 20.1501 of this chapter requires that the licensee make or cause to be made surveys to demonstrate compliance with 10 CFR Part 20 and requires the licensee to ensure that instruments and equipment used to show compliance with 10 CFR Part 20 are periodically calibrated. In addition, § 30.33(a)(2) of this chapter requires the licensee to have adequate instrumentation. Information on the types of instruments recommended for medical licensees is available in draft NUREG–1556, Vol. 9.

Section 35.590, Training for use of sealed sources for diagnosis, would appear as a new section. This section is

a revision of the training and experience requirements found in § 35.950, Training for use of sealed sources for diagnosis. Section III of the SUPPLEMENTARY INFORMATION section of this document contains a detailed discussion of the Commission's proposed changes to the training and experience requirements in Part 35. Note, 2 years after publication of the final rule, this section would replace the current requirements in § 35.920, Training for use of sealed sources for diagnosis.

Subpart H would be retitled, Therapeutic medical devices, and revised to address all medical uses of sealed sources and devices for therapy. Devices such as teletherapy, remote afterloaders, and gamma radiosurgery units are addressed in this subpart. This section does not contain requirements for manual brachytherapy, which are in subpart F. This subpart would replace the requirements in the current subpart I, Teletherapy, and codify requirements for remote afterloaders and gamma stereotactic radiosurgery units currently imposed by license conditions.

Section 35.600 would be retitled, Use of a sealed source in a device for therapeutic medical uses, and revised to delete any references to specific radionuclides and devices. The licensee would have the flexibility to use sealed sources and devices for therapeutic medical uses as approved in the Sealed Source and Device Registry.

Section 35.604, Radiation surveys of patients and human research subjects treated with remote afterloaders, would appear as a new section. This section would require that a licensee make a radiation survey of a patient or human research subject to confirm that the sources have been removed from the individual and returned to a shielded position before releasing the individual from licensee control. For fractionated treatments where the patient is not releasable pursuant to § 35.75, surveys need only be performed after the last time the source is returned to the shielded position. For example, a survey of the patient is not required every time that the source is retracted into the shielded safe when nursing personnel enter the patient treatment room to provide care to patients undergoing fractionated treatments using a low-or pulsed-dose rate remote afterloader. This new requirement was previously imposed on remote afterloader licensees by license condition. Recordkeeping requirements for this section would appear in § 35.2404, Records of radiation surveys of patients and human research subjects.

Section 35.605 would be retitled, Installation, maintenance and repair, and revised to clarify that only a person specifically licensed by the Commission or an Agreement State can install, maintain, adjust, or repair a device that involves work on the source shielding, source driving unit, or other electronic or mechanical mechanism that could expose the source, reduce the shielding around the source, or compromise the radiation safety of the device or the sources. It would also be revised to include additional types of devices, rather than just teletherapy units. The Commission is soliciting specific comment on whether the restrictions in paragraph (a) should apply to low dose-rate remote afterloaders.

Paragraph (b) would also specify that, except for low dose-rate remote afterloaders, only a person specifically licensed by the Commission or an Agreement State shall install, replace, relocate, or remove a sealed source or source contained in a device. For a low dose-rate remote afterloader, installation, replacement, relocation, or removal of a sealed source must be done by a person specifically licensed by the Commission or an Agreement State or by an authorized medical physicist. The exception to allow an authorized medical physicist to perform these activities for low-dose rate remote afterloaders was included in the proposed rule because the Commission believes that the radiation hazards associated with installation, replacement, relocation, or removal of a sealed source in these devices are similar to that of manipulation of manual brachytherapy sources. The recordkeeping requirements for this section would appear in § 35.2605, Records of installation, maintenance, and repair.

Section 35.606, License amendments, would be deleted in its entirety. The requirements in the current paragraphs (a), (b), and (d) would be addressed in the proposed revision to § 35.13(e). Paragraph (c) would be deleted because the licensees must comply with the dose limit requirements in 10 CFR Part 20 and no further limitations are warranted. The requirement in paragraph (e) to file an amendment before allowing an individual to perform the duties of the authorized medical physicist is addressed in the proposed § 35.13(b). Paragraph (e) would be deleted because the proposed requirements in subpart H would require that the authorized medical physicist perform specific duties. Any deviations from these requirements would necessitate an exemption from Part 35.

Section 35.610 would be retitled, Safety procedures and instructions for remote afterloaders, teletherapy units, and gamma stereotactic radiosurgery units, and revised to include remote afterloaders and gamma stereotactic radiosurgery units.

Paragraph (a) would require that a licensee develop, implement, and maintain safety procedures; locate safety procedures at the unit console; post safety instructions at the device console; and train operators.

Paragraphs (a)(1) and (a)(3) would codify requirements that are currently imposed on licensees by license conditions related to use of remote afterloaders. Because of the applicability of the requirements to all therapy device uses, they were added to the rule with the intent of having the requirements apply to all such device uses. Paragraph (a)(2) would be expanded to apply to all types of therapy devices. However, the Commission recognizes that there are certain design conditions that will necessitate an individual, other than the patient, being in the treatment room during the treatment. An example of this condition is use of a low energy beta or gamma source in a therapeutic medical device where the authorized user may need to be in the room with the patient. This exception does not relieve the licensees from complying with the dose limits for occupationally-exposed individuals or the general public in 10 CFR Part 20.

Paragraph (b) would be revised to require that a copy of the licensee's procedures be located at the unit console, and paragraph (c) would be revised to require that the location of the procedures and emergency response telephone numbers be posted. Previously, all of the above procedures were required to be posted. This was impractical with the addition of remote afterloaders because error conditions and responses are often several pages in length.

Paragraph (d) would be revised to require that, in addition to the initial instruction required in § 35.610, the licensee must provide initial instruction, annual training, and annual practice drills, in specifically identified procedures to all individuals who operate the device. The level of instruction should be commensurate with the individual's assigned duties. For example, an individual need not be instructed in equipment inspection, unless it is expected that during the normal course of the day, the individual will be required to inspect the unit. The Commission believes that due to the complexity of therapeutic treatment devices, refresher training and practice

drills on emergency response are warranted. The recordkeeping requirements for this section would appear in § 35.2310, Records of instruction and training.

Section 35.615 would be retitled, Safety precautions for remote afterloaders, teletherapy units, and gamma stereotactic radiosurgery units, and revised to include remote afterloaders and gamma stereotactic radiosurgery units. Many of the prescriptive requirements (e.g., beam condition indicator light and radiation monitor) were deleted from this section because they are currently addressed in 10 CFR Part 20.

The requirement in paragraph (d) for intercom systems, and the requirements in paragraphs (e), (f) and (g) would be added to codify requirements that are currently imposed on licensees by license conditions. Current license conditions were modified when they were incorporated into the proposed rule. For example, the presence of an authorized user and medical physicist during patient treatments was clarified for each type of use. As used in this provision, physically present means to be within ear shot of normal voice. Immediately available means that the individual is available on an on-call basis to respond to an emergency. At a minimum, this person must be available by telephone.

The Commission believes that the inherent risk of these procedures justifies the prescriptiveness of this regulation and believes that it is important that a properly trained physician be available at all times to respond to an emergency requiring source removal.

New sources, using pure beta emitters, are being considered for use in low and high dose-rate remote afterloading brachytherapy units. Because these beta sources present lower radiation risks to medical personnel and the public, the requirements for some of the safety precautions in this section may not be appropriate. The Commission is soliciting specific public comment on whether the requirements in this section should be waved for licensees that are using remote afterloaders with beta-emitting sources.

Section 35.620, Possession of survey instruments, would be deleted in its entirety because these specific requirements are not needed in Part 35. Section 20.1501 of this chapter requires that the licensee make, or cause to be made, surveys to demonstrate compliance with 10 CFR Part 20, and requires the licensee to ensure that instruments and equipment used to show compliance with 10 CFR Part 20 are periodically calibrated. In addition, § 30.33(a)(2) of this chapter requires licensees to have adequate equipment. Information on the types of instruments recommended for medical licensees is available in draft NUREG–1556, Vol. 9.

Section 35.630, Dosimetry equipment, would be revised to provide calibration requirements for instruments used in this subpart and subpart F. Paragraph (a)(1) would require that dosimetry systems be calibrated using a source whose activity is traceable to NIST and in accordance with published protocols approved by a nationally recognized body or by a calibration laboratory approved by AAPM. This change would give licensees two alternatives for direct traceability of dosimetry equipment calibration; i.e., either a source or the measurement instrument (e.g., well chamber) can be calibrated against a national standard. The Commission acknowledges that the industry standards for instrument calibration provide adequate assurance that equipment is properly calibrated. Paragraph (a)(2) would be revised to delete the reference to intercomparison meetings sanctioned by a calibration laboratory or radiologic physics centers accredited by the AAPM. This provision is no longer necessary because the AAPM does not sanction intercomparison meetings. References to cobalt-60 and cesium-137 contained within teletherapy units were deleted from the rule text to make the section applicable to dosimetry equipment for all radionuclides and therapy units. The recordkeeping requirements for this section would appear in § 35.2630, Records of dosimetry equipment.

Section 35.632 would be retitled, Full calibration measurements on teletherapy units, to clarify that the requirements in this section apply to teletherapy units and be revised. Paragraph (d) would be revised to delete the reference to the AAPM Task Group Reports and replace it with a requirement that full calibration measurements be done in accordance with published protocols approved by nationally recognized bodies. This allows the licensee more flexibility in choosing appropriate protocols. The Commission acknowledges that the industry standards for teletherapy unit calibration provide adequate assurance that equipment is properly calibrated. Paragraph (f) would be revised to replace the term ''teletherapy physicist'' with the term ''authorized medical physicist.'' The recordkeeping requirements for this section would appear in § 35.2632, Records of teletherapy full calibration.

Section 35.633, Full calibration measurements on remote afterloaders, would appear as a new section that would contain the requirements for the calibration of remote afterloaders. This section is similar in content to § 35.632. Requirements in this section would be based on recommendations found in AAPM Task Group Report No. 56. Recordkeeping requirements for this section would appear in § 35.2633, Records of remote afterloader full calibrations.

Section 35.634, Periodic spot-checks, would be deleted in its entirety and the requirements of this section, with minor modifications, would be moved to § 35.642.

Section 35.635, Full calibration measurements for gamma stereotactic radiosurgery units, would appear as a new section. This section would contain the requirements for the calibration of gamma stereotactic radiosurgery units and is similar in content to § 35.632. Requirements in this section are based on recommendations found in AAPM Report No. 54—Stereotactic Radiosurgery (Task Group 42, 1995). Recordkeeping requirements for this section would appear in § 35.2635, Records of gamma stereotactic radiosurgery unit full calibrations.

Section 35.636, Safety checks for teletherapy facilities, would be deleted in its entirety and the requirements in this section would be incorporated into proposed §§ 35.642, 35.643, 35.644, and 35.645.

Section 35.641, Radiation surveys for teletherapy facilities, would be deleted in its entirety. Radiation surveys at the surface of the main source safe would be addressed under proposed § 35.652. The remaining requirements in the current § 35.641 would be deleted to allow the licensee more flexibility in managing its radiation protection program.

Section 35.642 would be retitled, Periodic spot-checks for teletherapy units, and revised. The phrase ''teletherapy physicist'' would be replaced with the term ''authorized medical physicist'' throughout the section. The requirement in paragraph (c) to maintain a copy of the physicist's notification of the results of spot-checks to the licensee would be deleted to reduce the recordkeeping requirements for licensees. Paragraph (d) would be modified to require that the safety spot-checks be performed monthly and after each source installation. This revision would replace the safety check requirements after each source replacement in the current § 35.634, which would be deleted in the proposed rule. Paragraph (d)(3) would be modified to replace the term ''beam

condition indicator'' with ''source exposure indicator'' to clarify that indicators were needed to note whether the source was exposed and note to what degree the source was exposed. Paragraph (d)(4) would be revised to include a requirement for an intercom system that was previously imposed on licensees by license condition. An intercom is needed to assure that the licensee's staff and the patients have the ability to communicate verbally, in addition to the ability to communicate visually. Paragraph (e) would be revised to require that the licensee lock the control console in the off position, and not use the unit except as may be necessary to repair, replace, or check the malfunctioning system, in case of any malfunction identified during a safety spot-check. This revision is intended to make § 35.642 consistent with the requirement in the current § 35.636 regarding immediate actions to be taken when a malfunctioning system is identified. Recordkeeping requirements for this section would appear in § 35.2642, Records of periodic spot-checks for teletherapy units.

The requirements in the current § 35.643 would be deleted to allow a licensee more flexibility in designing a radiation protection program that is specific to its facility and which ensures that the dose limits in 10 CFR Part 20 are not exceeded.

Section 35.643, Periodic spot-checks for high and pulsed dose-rate remote afterloaders, would appear as a new section. This section would contain the requirements for periodic spot-checks of high and pulsed dose-rate remote afterloaders, and is similar in content to § 35.642. Requirements in this section are based on recommendations in AAPM Task Group Report No. 56. Recordkeeping requirements for this section would appear in § 35.2643, Records of periodic spot-checks for remote afterloaders.

Section 35.644, Periodic spot-checks for low-dose rate remote afterloaders, would appear as a new section. This revised section would contain the requirements for periodic spot-checks of low dose-rate remote afterloaders and would be similar in content to § 35.642. These proposed requirements are based on recommendations found in the AAPM Task Group Report No. 56. Some requirements were added to make the safety checks, and associated corrective actions, consistent with the requirements in § 35.642. The Commission is soliciting comment on whether the requirements for electrical interlocks should apply to low-dose rate remote afterloaders. Recordkeeping requirements for this section would appear in § 35.2643, Records of periodic spot-checks for remote afterloaders.

The current requirements in § 35.645, would be deleted to reduce the reporting burden on medical use licensees. Survey results are maintained by a licensee to show compliance with 10 CFR Part 20 and, therefore, would be available for review.

Section 35.645, Periodic spot-checks for gamma stereotactic radiosurgery units, would appear as a new section. This section would contain requirements for periodic spot-checks of gamma stereotactic radiosurgery units, and is similar in content to § 35.642. Requirements in this section are based on recommendations found in AAPM Report No. 54. Some requirements were added to make the safety checks, and associated corrective actions, consistent with the requirements in § 35.642. Recordkeeping requirements for this section would appear in § 35.2645, Records of periodic spot-checks for gamma stereotactic radiosurgery units.

The requirements in the current § 35.647 would be moved to the proposed § 35.655.

Section 35.647, Additional technical requirements for mobile remote afterloaders, would appear as a new section. This section would contain the requirements for mobile remote afterloaders which were previously listed in an internal NRC document entitled, ''Supplement 1 to Policy and Guidance Directive FC 86–4; Revision 1, Mobile Remote Afterloading Brachytherapy Licensing Module.'' Recordkeeping requirements for this section would appear in § 35.2647, Records of additional technical requirements for mobile remote afterloaders.

Based on discussions with the States, this section is designated as a Category D item of compatibility since there is no potential for medical use of byproduct material in other regulatory jurisdictions under reciprocity. NRC specifically requests comment on this issue relative to whether mobile medical licensees operate under reciprocity in other regulatory jurisdictions.

Section 35.652, Radiation surveys, would appear as a new section. This section would replace the current § 35.641. This section would require that, in addition to the surveys required by 10 CFR 20.1501, the licensee make surveys to assure that the maximum radiation levels and average radiation levels from the surface of the main source safe do not exceed the levels stated in the Sealed Source and Device Registry. These surveys provide added assurance that a device has been manufactured and that source(s) have been installed properly. Recordkeeping requirements for this section would appear in § 35.2652, Records of surveys of therapeutic treatment units.

Section 35.655, Five-year inspection for teletherapy and gamma stereotactic radiosurgery units, would appear as a new section and would contain the requirements for inspections which are in the current § 35.647. Proposed § 35.655 would require that teletherapy units and gamma stereotactic radiosurgery units be inspected and serviced during source replacement, or at intervals not to exceed 5 years, to assure proper functioning of the source exposure mechanism. Most gamma stereotactic radiosurgery licensees are required, by license condition, to inspect the units every 7 years; however, professionals in the medical community have indicated that the units are inspected on a more frequent basis. The Commission believes that the risk associated with using gamma stereotactic radiosurgery units justifies a change in the inspection frequency. Recordkeeping requirements for this section would appear in § 35.2655, Records of 5-year inspection for teletherapy and gamma stereotactic radiosurgery units.

Section 35.657, Therapy-related computer systems, would appear as a new section that would require licensees to verify that the computerized operating system and treatment planning system associated with a therapy device are operating appropriately and to perform acceptance testing on the treatment planning systems in accordance with published protocols approved by nationally recognized bodies. These changes are consistent with recommendations found in AAPM Task Group Report No. 40—Comprehensive QA for Radiation Oncology (1994).

This proposed requirement is especially important in light of recent information on the inability of computers to correctly recognize dates beyond December 31, 1999. Therapy-related computer systems may misread the year 2000 and cause the systems to fail, generate faulty data, or act in an incorrect manner. In particular, computer software used to calculate dose or to account for radioactive decay may not recognize the turn of the century, which could lead to incorrectly calculated doses or exposure times for treatment planning. The potential for system failures, such as this, would be identified when determining compliance with this proposed section.

Section 35.690, Training for use of therapeutic medical devices, would appear as a new section. This section

would revise the training and experience requirements found in § 35.960, Training for teletherapy, and would be expanded to include training for authorized uses of teletherapy, remote afterloaders, and gamma stereotactic radiosurgery units. Section III of the **SUPPLEMENTARY INFORMATION** section of this document contains a detailed discussion of training and experience. Note, 2 years after publication of the final rule, this section would replace the current requirements in § 35.960, Training for teletherapy.

Subpart J, Training and Experience Requirements, is in the current Part 35. Licensees would have the option to comply with the training and experience requirements in this subpart or in subparts B, and D-H until 2 years after the final rule is published in the **Federal Register**. At that time this subpart will be deleted. A more detailed discussion of the Commission's proposed changes to the training and experience requirements is in Section III of the **SUPPLEMENTARY INFORMATION** section of this document. The proposed schedule for implementation of the training and experience requirements is in Section VIII of the **SUPPLEMENTARY INFORMATION** section of this document.

Section 35.900, Radiation Safety Officer, is in the current Part 35. Two changes would be made in this section to correspond to the revised numbering system: § 35.57, Training for experienced Radiation Safety Officer, teletherapy or medical physicist, authorized user, and nuclear pharmacist; and § 35.24, Authority and responsibilities for the radiation protection program. This section would be deleted 2 years after the final rule is published in the **Federal Register** at which time licensees would be required to comply with the training and experience requirements in the new § 35.50, Training for Radiation Safety Officer. Section VIII of the **SUPPLEMENTARY INFORMATION** section of this document contains a detailed discussion of the Commission's proposed implementation of the training and experience requirements.

Section 35.901, Training for experienced Radiation Safety Officer, would be deleted in its entirety and the requirements of this section would be moved to the proposed § 35.57.

Section 35.910, Training for uptake, dilution, and excretion studies, is in the current Part 35. One change would be made in this section to correspond to the revised numbering system: § 35.57, Training for experienced Radiation Safety Officer, teletherapy or medical physicist, authorized user, and nuclear pharmacist. This section would be deleted 2 years after the final rule is published in the **Federal Register**, at which time licensees would be required to comply with the training and experience requirements in the new § 35.290, Training for uptake, dilution, and excretion studies. Section VIII of the **SUPPLEMENTARY INFORMATION** section of this document contains a detailed discussion of the Commission's proposed implementation of the training and experience requirements.

Section 35.920, Training for imaging and localization studies, is in the current Part 35. One change would be made in this section to correspond to the revised numbering system: § 35.57, Training for Experienced Radiation Safety Officer, teletherapy or medical physicist, authorized user, and nuclear pharmacist. This section would be deleted 2 years after the final rule is published in the **Federal Register**, at which time licensees would be required to comply with the training and experience requirements in the new § 35.292, Training for imaging and localization studies. Section VIII of the **SUPPLEMENTARY INFORMATION** section of this document contains a detailed discussion of the Commission's proposed implementation of the training and experience requirements.

Section 35.930, Training for therapeutic use of unsealed byproduct material, is in the current Part 35. One change would be made in this section to correspond to the revised numbering system: § 35.57, Training for experienced Radiation Safety Officer, teletherapy or medical physicist, authorized user, and nuclear pharmacist. This section would be deleted 2 years after the final rule is published in the **Federal Register**, at which time licensees would be required to comply with the training and experience requirements in the new § 35.390, Training for use of unsealed byproduct material for therapy or for use of unsealed byproduct material that requires a written directive. Section VIII of the **SUPPLEMENTARY INFORMATION** section of this document contains a detailed discussion of the Commission's proposed implementation of the training and experience requirements.

Section 35.932, Training for treatment of hyperthyroidism, is in the current Part 35. One change would be made in this section to correspond to the revised numbering system: § 35.57, Training for experienced Radiation Safety Officer, teletherapy or medical physicist, authorized user, and nuclear pharmacist. This section would be deleted 2 years after the final rule is published in the **Federal Register**, at which time licensees would be required to comply with the training and experience requirements in the new § 35.390, Training for use of unsealed byproduct material for therapy or for use of unsealed byproduct material that requires a written directive. Section VIII of the **SUPPLEMENTARY INFORMATION** section of this document contains a detailed discussion of the Commission's proposed implementation of the training and experience requirements.

Section 35.934, Training for treatment of thyroid carcinoma, is in the current Part 35. One change would be made in this section to correspond to the revised numbering system: § 35.57, Training for experienced Radiation Safety Officer, teletherapy or medical physicist, authorized user, and nuclear pharmacist. This section would be deleted 2 years after the final rule is published in the **Federal Register**, at which time licensees would be required to comply with the training and experience requirements in the new § 35.390, Training for use of unsealed byproduct material for therapy or for use of unsealed byproduct material that requires a written directive. Section VIII of the **SUPPLEMENTARY INFORMATION** section of this document contains a detailed discussion of the Commission's proposed implementation of the training and experience requirements.

Section 35.940, Training for use of brachytherapy sources, is in the current Part 35. One change would be made in this section to correspond to the revised numbering system: § 35.57, Training for experienced Radiation Safety Officer, teletherapy or medical physicist, authorized user, and nuclear pharmacist. This section would be deleted 2 years after the final rule is published in the **Federal Register**, at which time licensees would be required to comply with the training and experience requirements in the new § 35.490, Training for use of manual brachytherapy sources. Section VIII of the **SUPPLEMENTARY INFORMATION** section of this document contains a detailed discussion of the Commission's proposed implementation of the training and experience requirements.

Section 35.941, Training for ophthalmic use of strontium-90, is in the current Part 35. One change would be made in this section to correspond to the revised numbering system: § 35.57, Training for experienced Radiation Safety Officer, teletherapy or medical physicist, authorized user, and nuclear pharmacist. This section would be deleted 2 years after the final rule is published in the **Federal Register**, at which time licensees would be required to comply with the training and experience requirements in the new

§ 35.490, Training for use of manual brachytherapy sources. Section VIII of the **SUPPLEMENTARY INFORMATION** section of this document contains a detailed discussion of the Commission's proposed implementation of the training and experience requirements.

Section 35.950, Training for use of sealed sources for diagnosis, is in the current Part 35. One change would be made in this section to correspond to the revised numbering system: § 35.57, Training for experienced Radiation Safety Officer, teletherapy or medical physicist, authorized user, and nuclear pharmacist. This section would be deleted 2 years after the final rule is published in the **Federal Register**, at which time licensees would be required to comply with the training and experience requirements in the new § 35.590, Training for use of sealed sources for diagnosis. Section VIII of the **SUPPLEMENTARY INFORMATION** section of this document contains a detailed discussion of the Commission's proposed implementation of the training and experience requirements.

Section 35.960, Training for use of therapeutic medical devices, is in the current Part 35. One change would be made in this section to correspond to the revised numbering system: § 35.57, Training for experienced Radiation Safety Officer, teletherapy or medical physicist, authorized user, and nuclear pharmacist. This section would be deleted 2 years after the final rule is published in the **Federal Register**, at which time licensees would be required to comply with the training and experience requirements in the new § 35.690, Training for use of therapeutic medical devices. Section VIII of the **SUPPLEMENTARY INFORMATION** section of this document contains a detailed discussion of the Commission's proposed implementation of the training and experience requirements.

Section 35.961 would be retitled, Training for an authorized medical physicist, to reflect that the training and experience requirements in this section apply to authorized medical physicists rather than just teletherapy physicists, and would be revised. In addition, the list of tasks in paragraph (c) would be changed to reflect the new numbering system. This section would be deleted 2 years after the final rule is published in the **Federal Register**, at which time licensees would be required to comply with the training and experience requirements in the new § 35.51, Training for an authorized medical physicist. Section VIII of the **SUPPLEMENTARY INFORMATION** section of this document contains a detailed discussion of the Commission's proposed implementation of the training and experience requirements.

Section 35.970, Training for an authorized nuclear pharmacist, would be deleted in its entirety and the requirements would be moved to the proposed § 35.57.

Section 35.971, Physicians training in a three month program, would be deleted in its entirety. Three month nuclear medicine programs are no longer available. Criteria for authorized users are now specified in other areas of the rule.

Section 35.980, Training for an authorized nuclear pharmacist, would not be changed. This section would be deleted 2 years after the final rule is published in the **Federal Register**, at which time licensees would be required to comply with the training and experience requirements in the new § 35.55, Training for an authorized nuclear pharmacist. Section VIII of the **SUPPLEMENTARY INFORMATION** section of this document contains a detailed discussion of the Commission's proposed implementation of the training and experience requirements.

Section 35.981, Training for experienced nuclear pharmacists, has not been changed. This section would be deleted 2 years after the publication of the final rule in the **Federal Register**, at which time licensees would be required to comply with the training and experience requirements in the new § 35.55, Training for an authorized nuclear pharmacist. The Commission solicits specific comment on the impact of deleting this section. Section VIII of the **SUPPLEMENTARY INFORMATION** section of this document contains a detailed discussion of the Commission's proposed implementation of the training and experience requirements.

Section 35.990, Violations, would be deleted in its entirety, and the requirements of this section, with minor modifications, would be moved to the proposed § 35.4001

Section 35.991, Criminal penalties, would be deleted in its entirety, and the requirements of this section, with minor modifications, would be moved to the proposed § 35.4002.

Section 35.999, Resolution of conflicting requirements during transition period, would be deleted in its entirety, and the requirements of this section, with modifications, would be moved to the proposed § 35.10.

Subpart K, Other Medical Uses of Byproduct Material or Radiation from Byproduct Material, would be a new subpart. This subpart was developed to accommodate use of radioactive material in an emerging technology.

Section 35.1000, Other medical uses of byproduct material or radiation from byproduct material, is new. It would be added to accommodate emerging technologies. Specific information that must be provided to the Commission in support of an application for use under § 35.1000 is provided in § 35.12(d).

Subpart L, Records, is a new subpart. This subpart would contain all the specific recordkeeping requirements necessary to implement the proposed requirements in Part 35. General requirements for record maintenance, such as electronic storage, are provided in § 35.5. Grouping of records into one subpart was done to facilitate use by the licensees, and is consistent with the approach used in part 20. A licensee may reference this section when determining whether something must be recorded, rather than having to review the entire regulation to find out if there is a particular recordkeeping requirement. Many of the recordkeeping requirements remain unchanged. However, some new sections have been added as a result of new requirements, especially in subpart H. The Commission is soliciting public comment on whether all recordkeeping requirements should be grouped into one subpart or whether all recordkeeping requirements should be included in the section requiring the record. In addition, the Commission is soliciting specific public comment on which recordkeeping requirements could be deleted in the final rule and the basis for the deletion. For example, should the recordkeeping requirements in § 35.2063 be retained for byproduct material administered pursuant to §§ 35.100 and 35.200 because of the low risk associated with this type of use?

Section 35.2024, Records of authority and responsibility for radiation protection programs, would require the licensee to retain a record of actions taken by the licensee's management in accordance with § 35.24(a) for 5 years. The 5-year retention period is a reduction from current requirements to maintain records of the approval of licensing actions, individuals, and radiation protection program changes. Currently, similar records are required to be maintained for the duration of the license (reference current § 35.22 and § 35.31). This period would allow sufficient time for NRC to review records of licensee actions.

It would also require the licensee to retain the copy of the authorities, duties, and responsibilities of the Radiation Safety Officer for the duration of the license. In many cases, these records would take the place of the Radiation Safety Committee meeting minutes. The

Commission believes that it is important to document licensees' management review and approval of licensing actions, changes to the radiation protection program, and the authorities, duties, and responsibilities of the Radiation Safety Officer. The record of licensing actions and radiation protection program changes must include a summary of actions and a signature of licensee management.

In addition, this section would require the licensee to retain a copy of the authorities, duties and responsibilities of the Radiation Safety Officer that includes the signatures of the radiation safety officer and licensee management for the duration of the license. This extended period is warranted in light of the importance of the functions performed by the Radiation Safety Officer.

Section 35.2026, Records of radiation protection program safety changes, would require the licensee to retain a record of each radiation protection program change, as required by § 35.26 for 5 years. The record must include a copy of the old and new procedure, the effective date of the change, and the signature of the Radiation Safety Officer and licensee management that reviewed and approved the change. The Commission recognizes that this requirement for management's signature is redundant to the requirement in § 35.2024. However, it believes this approach is warranted in light of the importance of these actions and the intent to keep requirements that are closely related in one subject area. Currently, licensees must retain a record of each ''radiation safety program'' change until the license has been renewed or terminated. Therefore, this proposed change represents a reduction in burden. This record is needed to document what radiation changes were made in the program. This record facilitates the Commission's evaluation of minor radiation safety program changes and provides licensees with a record of the changes.

Section 35.2040, Records of written directives, would require the licensee to retain a copy of written directives required by § 35.40 for 3 years. These records will help to ensure that administrations were in accordance with the written directives. The 3-year recordkeeping retention period corresponds with the current retention period for written directives. Only minor changes were made to the specific items that must currently be recorded in the written directive. These changes were discussed under § 35.40.

Section 35.2045, Records of medical events, would require that the licensee maintain a record of medical events reported pursuant to § 35.3045 for 3 years. This section, in part, is intended to replace the current recordkeeping requirements in § 35.33. The records made pursuant to § 35.3045 must contain the licensee's name; the name of the prescribing physician; the affected or potentially affected individual's social security number or other identification number if one has been assigned; a brief description of the medical event; why it occurred; the effect on the individual; and the actions taken to prevent recurrence. This record is needed to document medical events for licensee and Commission review. The requirement to maintain records of medical events is similar to the current requirement for maintaining records of misadministrations. This proposed requirement would provide for a reduction in licensee burden since medical events records would be required to be maintained for 3 years rather than 5 years.

Section 35.2060, Records of instrument calibrations, would require the licensee to maintain a record of dose calibrator calibrations performed in accordance with §§ 35.60 and 35.62 for 3 years. These records are required to document that the instruments are functioning correctly. The name, rather than the signature, of the individual who performed the calibration would be required so that licensees would have the flexibility of using paper records or computer-generated records. This requirement does not prohibit licensees from continuing to have the individual who performed the calibration sign the record. The 3-year recordkeeping retention period is consistent with the current retention period for instrument calibrations.

Section 35.2061, Records of radiation survey instrument calibrations, would require the licensee to maintain a record of radiation survey instrument calibrations required by § 35.61 for 3 years. No changes have been made from the current recordkeeping requirements for radiation survey instrument calibrations. These records are required to document that the instruments are functioning correctly. The 3-year recordkeeping retention period is consistent with the current retention period for instrument calibrations.

Section 35.2063, Records of dosage of unsealed byproduct material for medical use, would require the licensee to maintain a record of dosage determinations required by § 35.63 for 3 years. Minor changes have been made from the current recordkeeping requirements for dosage measurement to delete the requirement to record the expiration date of the radiopharmaceutical. This was done because the expiration date is primarily related to drug stability and sterility. The term ''dosage measurement'' has been replaced by the term ''dosage determination'' to be consistent with the change proposed in § 35.63. Finally, a change would be made to require that the name of the individual who determined the dosage be documented. The licensee will be required to record dosages administered to patients or human research subjects. This record is required for licensees to show that they are maintaining control of radioactive material. The 3-year recordkeeping retention period corresponds with the current retention period for dosage records.

Section 35.2067, Records of possession of sealed sources and brachytherapy sources, would require the licensee to retain records of the leak tests and inventory required by § 35.67 (b) and (g) for 3 years. The record retention period would be reduced from 5 years to 3 years to reduce regulatory burden. The Commission does not believe the extra period is warranted. One change has been made from the current recordkeeping requirements for leak tests and inventories. The name of the individual performing the leak test and inventory would be recorded rather than the signature of the Radiation Safety Officer. Leak test records are required to show that the leak test was done at the appropriate time interval and that sealed sources are not leaking. Inventory records are necessary to show that the possession of sealed sources did not exceed the amount authorized by the license.

Section 35.2070, Records of surveys for ambient radiation exposure rate, would require the licensee to maintain records of radiation surveys for 3 years. One change has been made from the current recordkeeping requirements for radiation surveys. The name of the individual performing the survey rather than the initials of the individual would be required to be recorded. These records are needed to document that surveys were performed. The 3-year recordkeeping retention period is consistent with the current retention period for radiation surveys.

Section 35.2075, Records of the release of individuals containing radiopharmaceuticals or implants, would require the licensee to maintain records of patient release required by § 35.75 for 3 years. No changes have been made from the current recordkeeping requirements in § 35.75. This record is needed to show

compliance with the requirements in § 35.75.

Section 35.2080, Records of administrative and technical requirements that apply to the provision of mobile services, would require the licensees to maintain a copy of the letter that permits the use of byproduct material at a client's address of use for 3 years after the last provision of service; and to retain the records of the surveys for 3 years. One change has been made in these records that are required by § 35.80. The name of the individual performing the survey rather than the initials of the individuals would be required to be recorded. The records are needed to show compliance with the requirements in § 35.80.

Section 35.2092, Records of waste disposal, would require the licensee to maintain records of the disposal of licensed materials made in accordance with § 35.92 for 3 years. Minor changes have been made in the recordkeeping requirements in the current Part 35. The licensee would no longer be required to record the date that the material was placed in storage because the requirement to store material for 10 half-lives would be deleted in the proposed rule. The record must include the date of the disposal, the radionuclides disposed, the survey instrument used, the background dose rate, the dose rate measured at the surface of each waste container, and the name of the individual who performed the disposal. This record is needed to document that radioactive material is not disposed of as ordinary waste. The 3-year recordkeeping retention period is consistent with the current retention period for waste disposal records.

Section 35.2204, Records of molybdenum-99 concentration, would require the licensee to maintain a record of the molybdenum-99 concentration tests required by § 35.204(b) for 3 years. Minor changes have been made in the recordkeeping requirements from the current rule. The licensee would no longer be required to record the measured activity of the technetium expressed in millicuries, and the measured activity of the molybdenum expressed in microcuries. The record must include, for each measured elution of technetium-99m, the ratio for the measures expressed as microcuries of molybdenum per millicurie of technetium, the time and date of the measure, and the name of the individual who performed the disposal. This record is needed to document that the concentration measurement was made and that the maximum molybdenum-99 concentration level was not exceeded. The 3-year recordkeeping retention period is consistent with the current retention period for records of molybdenum-99 concentration.

Section 35.2310, Records of instruction and training, would require the licensee to maintain a record of radiation safety instructions required by §§ 35.310, 35.410, and 35.610 for 3 years. The record must include a list of the topics covered, the date of the instruction or training, the name(s) of the attendee(s) and the name of the individual who gave the instruction. This record is needed to document that the instruction and training was given. The 3-year recordkeeping retention period is consistent with the current retention period for training records.

Section 35.2404, Records of radiation surveys of patients and human research subjects, would require the licensee to maintain a record of the radiation surveys required by § 35.404 for 3 years. The licensee would no longer be required to record the dose rate from the patient or the human research subject expressed as millirem per hour and measured at 1 meter from the patient or human research subject. Each record must include the date, location, results of the survey, an identification of the patient or the human research subject, survey instrument used, and the name of the individual who made the survey. These records are used to show that sources have not been misplaced and that all sources have been removed from the patient. The 3-year recordkeeping retention period is consistent with the current retention period for surveys.

Section 35.2406, Records of brachytherapy source inventory, would require the licensee to maintain a record of brachytherapy source accountability required by § 35.406 for 3 years. Changes have been made in the recordkeeping requirements that are in the current rule. The licensee would no longer be required to record the following items since they would be deleted from discussion in § 35.406: the names of the individuals permitted to handle the sources; name and room number of the patient or the human research subject receiving the implant; number and activity of the sources in storage after the removal; and the number and activity of sources in storage after the return.

The proposed rule would require that, for temporary implants, the record must include the number and activity of sources removed from and returned to storage; the time and date they were removed from and returned to storage; the location of use; and the name of the individual who removed and returned the sources to storage. For permanent implants, the record must include the number and activity of sources removed from and returned to storage; the date they were removed from and returned to storage; the number and activity of sources removed from and returned to storage; the number and activity of sources permanently implanted in the patient or human research subject; and the name of the individual who removed and returned the sources to storage. This record is required so that, if a brachytherapy source is misplaced or missing, the licensee is immediately alerted and can take appropriate action. The 3-year recordkeeping retention period is consistent with the current retention period for inventory records.

Section 35.2432, Records of full calibrations on brachytherapy sources, would require the licensee to retain a record of the results of brachytherapy source calibrations for 3 years after the last use of the source. This is a new recordkeeping section. The record must contain the date of the calibration; the manufacturer's name, model number, and serial number for the source and instruments used to calibrate the source; the source output; source positioning accuracy within applicators; and the name of the individual or source manufacturer who performed the calibration. These records are needed to document that the brachytherapy sources have been calibrated.

Section 35.2605, Records of installation, maintenance, and repair, would require the licensee to retain a record of the installation, maintenance, and repair of therapeutic medical devices, as required by § 35.605, for 3 years. This is a new recordkeeping section. Previously, licensees were not required to keep records of installation, maintenance, and repair. For each installation, maintenance, and repair, the record must include the date, description of the service, and name(s) of the individual(s) who performed the work. This record is necessary to document that the devices are properly installed, maintained, and repaired; to establish trends in device performance; and to establish a service history that may be used in evaluation of generic equipment problems.

Section 35.2630, Records of dosimetry equipment, would require the licensee to retain a record of the calibration, intercomparison, and comparisons of its dosimetry equipment done in accordance with § 35.630 for the duration of the license. No changes have been made in the recordkeeping requirements from the current rule. These records are needed to show that calibrations of medical devices were made with properly calibrated instruments.

Section 35.2632, Records of teletherapy full calibrations, would require the licensee to maintain a record of the teletherapy full calibrations required by § 35.632 for 3 years. The record retention period would be decreased from the duration of the use of the teletherapy unit source to 3 years to reduce regulatory burden. The term ''teletherapy physicist'' was replaced with the term ''authorized medical physicist.'' No other changes were made to the current recordkeeping requirements for this section. These records are needed to document that calibrations were performed in accordance with § 35.632.

Section 35.2633, Records of remote afterloader full calibrations, would require the licensee to maintain a record of the remote afterloader full calibrations required by § 35.633 for 3 years. This is a new recordkeeping section. The recordkeeping requirements in this section are similar to the recordkeeping requirements for teletherapy units in § 35.2632. The record must include the date of the calibration; the manufacturer's name, model number, and serial number for the remote afterloader, source, and instruments used to calibrate the unit; the source output; an assessment of timer accuracy and linearity, source positioning accuracy, source guide tube and connector lengths, source retraction functionality; and the signature of the authorized medical physicist who performed the full calibration. These records are needed to document that calibrations were performed in accordance with § 35.633.

Section 35.2635, Records of gamma stereotactic radiosurgery unit full calibrations, would require the licensee to maintain a record of the calibrations required by § 35.635 for 3 years. This is a new recordkeeping section. The recordkeeping requirements in this section are similar to the recordkeeping requirements for teletherapy units in § 35.2632. The record must include the date of the calibration; the manufacturer's name, model number, and serial number for the gamma stereotactic radiosurgery unit, source, and instruments used to calibrate the unit; the unit output; an assessment of the relative helmet factors, isocenter coincidence, timer accuracy and linearity, on-off error, and trunnion centricity; and the signature of the authorized medical physicist who performed the full calibration. These records are needed to document that calibrations were performed in accordance with § 35.635. This change reflects corresponding changes made in § 35.642.

Section 35.2642, Records of periodic spot-checks for teletherapy units, would require the licensee to retain a record of each periodic spot-check for teletherapy units required by § 35.642 for 3 years. Minor changes have been made in the recordkeeping requirements from the current rule. The licensee would no longer be required to record the operability of the beam condition indicator light, but would be required to record the operability of the source exposure indicator light. This change reflects corresponding changes made in § 35.642. The record must include the date of the spot-check; the manufacturer's name, model number, and serial number for the teletherapy unit source, and instrument used to measure the output of the teletherapy unit; an assessment of timer linearity and constancy; the calculated on-off error, a determination of the coincidence of the radiation field and the field indicated by the light beam localizing device; the determined accuracy of each distance measuring and localization device; the difference between the anticipated output and the measured output; notations indicating the operability of each entrance door electrical interlock, each electrical or mechanical stop, each source exposure indicator light, and the viewing and intercom system and doors; name of the individual who performed the test and the signature of the authorized medical physicist who reviewed the periodic spot-check. These records are needed to document that spot-checks were performed in accordance with § 35.642. The 3-year recordkeeping retention period is consistent with the current retention period for periodic spot-checks.

Section 35.2643, Records of periodic spot-checks for remote afterloaders, would require the licensee to retain a record of each spot-check for remote afterloaders required by §§ 35.643 and 35.644 for 3 years. This is a new recordkeeping section. The record must include the date of the spot-check; the manufacturer's name, model number, and serial number for both the remote afterloader, source, and instrument used to measure the output of the remote afterloader; the difference between the anticipated output and the measured output; notations indicating the operability of each entrance door electrical interlock, source retraction mechanism, radiation monitors, source exposure indicator lights, viewing and intercom, applicators and connectors, and source positioning accuracy; the name of the individual who performed the periodic spot-check; and signature of the authorized medical physicist who reviewed the periodic spot-check. These records are needed to document that spot-checks were performed in accordance with §§ 35.643 and 35.644.

Section 35.2645, Records of periodic spot-checks for gamma stereotactic radiosurgery units, would require the licensee to retain a record of each spot-check for gamma stereotactic radiosurgery units required by § 35.645 for 3 years. This is a new recordkeeping section. The record must include the date of the spot-check; the manufacturer's name, model number, and serial number for the gamma stereotactic radiosurgery unit, and the instrument used to measure the output of the unit; the measured source output and source output against computer calculations; notations indicating the operability of radiation monitors, helmet microswitches, emergency timing circuits, emergency off buttons, electrical interlocks, source exposure indicator lights, viewing and intercom systems, timer termination systems, hydraulic cutoff mechanism, and stereotactic frames and localizing devices (trunnions); and the name of the individual who performed the periodic spot-check; and the signature of the authorized medical physicist who reviewed the periodic spot-check. This record is needed to show that spot-checks were performed in accordance with § 35.645.

Section 35.2647, Records of additional technical requirements for mobile remote afterloaders, would require the licensee to retain a record of each check for mobile remote afterloaders required by § 35.647 for 3 years. This is a new recordkeeping section. The record must include the date of the check; the manufacturer's name, model number, and serial number for the remote afterloader; notations accounting for all sources before departing from a client's facility; notations indicating the operability of each entrance door electrical interlock, radiation monitors, source exposure indicator lights, viewing and intercom system, applicators and connectors, and source positioning accuracy; and the signature of the individual who performed the check. This record is needed to show that required spot-checks were performed in accordance with § 35.647 and that the unit is operable. The 3-year recordkeeping retention period is consistent with the current retention period for checks on mobile remote afterloaders.

Section 35.2652, Records of surveys of therapeutic treatment units, would require the licensee to maintain a record of radiation surveys made in accordance

with § 35.652 for the duration of use of the unit. This recordkeeping section has been changed to require that the records of radiation surveys of the treatment unit must be maintained for the duration of use of the unit, rather than for the duration of the license, to reduce regulatory burden. In addition, the licensee is no longer required by this section to maintain a plan of the areas surrounding the treatment room that were surveyed, the measured dose rate at several points in each area expressed in millirem per hour, and the calculated maximum quantity of radiation over a period of 1 week for each restricted and unrestricted area. This change reflects corresponding changes made in § 35.652. The record must include the date of the measurements; the manufacturer's name, model number and serial number of the treatment unit, source, and instrument used to measure radiation levels; and each dose rate measured around the source while the unit is in the off position and the average of all measurements and the signature of the individual who performed the surveys. This record is needed to document radiation levels in areas surrounding therapeutic devices.

Section 35.2655, Records of 5-year inspection for teletherapy and gamma stereotactic surgery units, would require the licensee to maintain a record of the 5-year inspection for teletherapy and gamma stereotactic radiosurgery units required by § 35.655 for the duration of the unit. This recordkeeping section would be changed to require that the records of inspections of the treatment units must be maintained for the duration of use of the unit, rather than for the duration of the license, to reduce regulatory burden. A minor change was made to delete the requirement to maintain a record of the components replaced to also reduce regulatory burden. The record must contain the inspector's name; the inspector's radioactive materials license number; the date of inspection; the manufacturer's name and model number and serial number for both the treatment unit and source; a list of components inspected and serviced; the type of service; and the signature of the inspector. This record is needed to document the type of service that was performed.

Subpart M, Reports, is a new subpart in Part 35. This subpart would contain all the reporting requirements necessary to implement the proposed requirements in Part 35. Grouping of reporting requirements into one subpart was done to facilitate use by the licensee. A licensee may reference this section when determining whether something must be reported, rather than having to review the entire regulation to find out if there is a particular reporting requirement. Many of the reporting requirements remain unchanged. The Commission is soliciting public comments on whether the reporting requirements should be included in the section requiring the report.

Section 35.3045, Reports of medical events, would provide criteria for reporting medical events. The criteria are based on the current requirements in § 35.33. Changes would be made to make the reporting threshold dose-based where possible to add a dose threshold of 0.5 Sv (50 rem) shallow dose equivalent to the skin; and to address two areas that have caused problems in implementing the current requirements in § 35.33—patient intervention and wrong treatment site. With respect to patient intervention, the licensee is expected to act reasonably, in accordance with prevailing standards of care, to prevent a medical event. Generally speaking, patient intervention involves actions by the patient such as dislodging or removing treatment devices or prematurely terminating treatment. In cases where patient intervention is probable, the licensee should take reasonable actions (e.g., extra sutures, taping, or more frequent checks by the nursing staff) to avoid a medical event. Factors which may be considered in determining whether a licensee's actions are reasonable include whether the licensee monitors the patient routinely and whether the licensee responds properly once it becomes aware of the disruption of treatment. The Commission is soliciting input from the public on whether the proposed changes adequately address patient intervention and wrong treatment site.

The proposed rule would require that licensees notify, by telephone, the NRC Operations Center no later than the next calendar day after discovery of the medical event. The licensee would be required to submit a written report to the appropriate NRC Regional Office listed in 10 CFR 30.6 within 15 days after discovery of the medical event. In addition, the licensee would be required to notify the referring physician and the individual affected by the medical event, or the responsible relative or guardian, no later than 24 hours after its discovery, unless the referring physician personally informs the licensee either that he will inform the individual or that, based on medical judgment, telling the individual would be harmful. This reporting requirement is needed to ensure that NRC is aware of medical events. Section III of the Supplementary Information of this document contains a detailed discussion of the Commission's views on the notification requirements.

The proposed rule would require that a written report be furnished to the individual within 15 days after discovery of the medical event. This requirement could be met by sending either a copy of the report that was submitted to the NRC or a brief description of both the event and the consequences as they may affect the individual. The proposed rule would delete the current requirement to include a statement that the report submitted to the NRC can be obtained from the licensee. This deletion does not preclude the licensee from providing the report to the individual but provides the licensee flexibility in transmitting pertinent information to the individual.

Section 35.3047, Report of a dose to an embryo/fetus or a nursing child, would provide reporting criteria. Paragraph (a) would require that a licensee report to NRC any administration of byproduct material, or radiation from byproduct material, to a pregnant woman that results in a dose to an embryo/fetus that is greater than 5 mSv (500 mrem) absorbed dose unless specifically approved, in advance, by the authorized user. It should be emphasized that only unintended exposures would be reported to NRC. This report does not include exposure of individuals in excess of the public dose limits in Part 20. Paragraph (b) would require a licensee to report to NRC any administration of byproduct material to a breast feeding woman that results in a dose to the nursing child that is greater than 5 mSv (500 mrem) total effective dose equivalent. Oral reports must be made to the NRC Operations Center within 5 days of discovery and followed with a written report no later than 15 days.

Information required by this section is needed so that NRC can comply with Section 208 of the Energy Reorganization Act of 1974 (Public Law 93–438), as amended, to submit an annual report to Congress a report of unscheduled incidents or events which the Commission considers significant from the standpoint of public health and safety, e.g., abnormal occurrences.

NRC identifies an abnormal occurrence using the revised abnormal occurrence criteria that was published in the **Federal Register** on April 17, 1997 (62 FR 18820). Section II of the policy statement defines unintended radiation exposure as ''any occupational exposure, exposure to the general public or exposure as a result of a medical misadministration (as defined in § 35.2)

involving the wrong individual that exceeds the reporting values established in the regulations.'' This section also states that ''All other reported medical misadministrations will be considered for reporting as an Abnormal Occurrence under the criteria for medical licensees. In addition, unintended radiation exposures include any exposure to a nursing child, fetus, or embryo as a result of an exposure (other than an occupational exposure to an undeclared pregnant woman) to a nursing mother or pregnant woman above specified values.'' Appendix A, Section I. A, of the policy statement, states that NRC will provide information on ''any unintended radiation exposure to any minor (an individual less than 18 years of age) resulting in an annual total effective dose equivalent of 50 mSv (5 rem) or more, or to an embryo/fetus resulting in a dose equivalent of 50 mSv (5 rem) or more.''

At the present time, NRC has no regulatory requirements that would require reporting of those types of events. The Commission considered two alternatives that could be pursued: revise the current Abnormal Occurrence Criteria to delete the requirement to inform Congress of this type of event; or develop a reporting requirement that would provide information needed by the Commission to comply with Section 208. The Commission did not pursue the first option because the Abnormal Occurrence reporting criteria were recently revised.

Only two comments were received on the proposed criteria in this area. One commenter believed that the threshold for reporting a dose to any minor or embryo/fetus should be reduced to less than 0.350 rem instead of the proposed 5 rem. The second commenter recommended that the criteria related to a nursing infant, fetus or embryo as a result of an exposure to a nursing mother or a pregnant woman should be deleted from the criteria until the issue can be resolved through consultation with the ACMUI and a separate public comment period on that issue.

The Commission is not inclined to revise the criteria without public comments indicating that it is not appropriate for NRC to report this type of event to Congress and that the proposed reporting requirement in § 35.3047 is overly burdensome or unwarranted. As a result, the Commission has decided to pursue the second alternative. However, the Commission does solicit specific comments in this area regarding whether modification of the Abnormal Occurrence Policy Statement criteria is needed.

The proposed rule would require that licensees report to NRC any unintended exposures to an embryo/fetus or nursing child that exceeds the dose threshold, as specified in the proposed § 35.3047. The Commission recognizes that the proposed reporting threshold is less than the Abnormal Occurrence reporting level. This was done to make the Part 35 reporting threshold consistent with the reporting thresholds in 10 CFR Part 20. The time period for reporting is similar for the reporting requirements in 10 CFR parts 20 and 35.

The proposed rule would also require the licensee to notify the referring physician and the pregnant individual or mother within 5 days of discovery of an event that would require reporting under this section, unless the referring physician personally informs the licensee either that he or she will inform the mother or that, based on medical judgment, telling the mother would be harmful. (Note, it is recognized that in some cases, the woman may no longer be pregnant or nursing when the event is discovered. In this situation, it is expected that the individual responsible for the infant's or child's medical care would be notified.) In cases where the pregnant individual or mother was not notified, the notification may be made instead to the mother's or child's responsible relative or guardian.

The terminology of the notification provisions of § 35.3047 is similar to § 35.3045. Due to uncertainties on the part of some licensees as to the scope of the term ''responsible relative or guardian,'' the Commission is soliciting specific public comment on whether there is a better term than ''responsible relative or guardian'' to apply to those situations in which the mother is not notified, e.g., in the referring physician's medical judgement, telling the mother would be harmful; the mother is a minor; or the mother is not competent to make decisions regarding medical care.

The Commission is also concerned about notification in situations where the pregnant individual has purposely chosen not to tell others of her pregnancy status and notification to a responsible relative or guardian would be required by this rule, e.g., the individual is a minor and does not want others to know of the pregnancy. As a result of concerns regarding reporting and notification pursuant to this section, the NRC is soliciting specific public comment on the impacts of this reporting requirement on licensee procedures, activities, or medical practices.

The Commission recognizes that the standard of practice for authorized users is to assess the pregnancy or nursing status of their patients (reference American College of Radiology ''Standard for the Performance of Therapy with Unsealed Radionuclide Sources,'' 1996, and ''Society of Nuclear Medicine General Procedure Guidelines for Imaging with Radionuclides,'' 1997). As a result, NRC does not believe that it is appropriate to propose a rule that would require a licensee to assess the pregnancy or nursing status of patients. It does, however, believe that it is appropriate to propose a rule that would require the licensee to inform NRC when it learns of an unintended dose to an embryo/fetus or a nursing child that exceeds the thresholds discussed above. Reporting under § 35.3047 would not necessarily be subject to enforcement action if the licensee had complied with § 35.75. Although the regulation requires that the licensee provide information on the cause of the incident and corrective actions to prevent recurrence, NRC acknowledges that in many, and if not all, incidents, the licensee might not have been able to prevent the incident because the individual may not have been aware of the pregnancy or may have opted not to disclose her pregnancy or nursing status.

Section 35.3067, Reports of leaking sources, would require the licensee to file a report with the appropriate NRC Office listed in § 30.6 of this chapter, with a copy to Director, Office of Nuclear Material Safety and Safeguards, U.S. Nuclear Regulatory Commission, Washington, DC 20555–0001, within 5 days if a leakage test required by § 35.67 reveals the presence of 185 Bq (0.005 microcurie) or more of removable contamination. This reporting requirement is similar to the current requirements for leaking sources. The report must contain the model number and serial number if assigned, of the leaking source; Radionuclide and its estimated activity; the measured activity of each test sample expressed in microcuries; a description of the method used to measure each test sample; the date of the test; and the action taken.

Subpart N, Enforcement, contains statements regarding enforcement. This subpart would replace the statements in the current Subpart K, Enforcement.

Section 35.4001, Violations, would appear as a new section and replace the current § 35.990 which would be deleted in the proposed rule. This section reflects the new numbering system for the revised Part 35.

Section 35.4002, Criminal penalties, would appear as a new section and replace the current § 35.991 which would be deleted in the proposed rule.

This section reflects the new numbering system for the revised Part 35.

Appendix A to Part 35, Examining Organization or Entity, would appear as a new appendix. This appendix would provide the requirements for an examining organization or entity; examination programs; and written examinations. This appendix is needed because of the proposed revision to the training and experience criteria for an authorized user, medical physicist, authorized nuclear pharmacist, and radiation safety officer that would require an individual to pass an examination given by an organization or entity approved by NRC or an Agreement State. All criteria in Appendix A are considered by the Commission as necessary to assure that an individual's competency is adequately assessed.

NRC is proposing that an independent examining organization be an organization that would make its examination process available to the general public nationwide and not restrict access because of race, color, religion, sex, age, national origin or disability. The independent examining organization or entity would need to:

(1) Have adequate staff;

(2) Have a viable system of financing its operations;

(3) Have a policy and decision making review board;

(4) Be governed by written organizational by-laws and policies;

(5) Provide NRC or an Agreement State with a description of its procedures for choosing examination sites and for providing an appropriate examination environment;

(6) Submit its request for approval to the Director, Office of Nuclear Materials Safety and Safeguards.

An independent examining organization or entity would also need to have:

(1) A committee to review and approve the examination guidelines and procedures, and to advise the organization's staff in implementing the examination program;

(2) A committee to review complaints from examined individuals;

(3) Written procedures describing all aspects of its examination program;

(4) An agreement to exchange information about examined individuals with the Commission and the Agreement States;

(5) Procedures to ensure that examinations are not given to individuals who have also been instructed by the examining organization in the same subject area;

(6) Procedures to ensure that examined individuals are provided due process with respect to the administration of its examination program;

(7) Procedures for proctoring examinations; and

(8) Procedures to ensure that all examination questions are protected from disclosure.

NRC is proposing in Section II of Appendix A that all examination programs must (1) require applicants for examination to receive training in the topics set forth in §§ 35.50(b)(1), 35.51(b)(1), 35.55(b)(3), 35.290(b)(1), 35.292(b)(1), 35.390(b)(1), 35.490(b)(1) or 35.690(b)(1) and satisfactorily complete a written examination covering these topics. NRC is proposing in Section III that:

(1) The written examination must be designed to test an individual's knowledge and understanding of the topics listed in the above sections;

(2) The written examination must have test items drawn from a question bank containing psychometrically valid questions based on the material in the above listed questions; and

(3) A sample examination must be submitted to the Commission for review initially and every 5 years.

A 5-year review cycle is consistent with the review of residency programs by the Accreditation Council for Graduate Medical Education.

Summary of Specific Issues Identified for Public Comment

The Commission is soliciting specific public comment on various issues associated with this rulemaking action. These issues are discussed in detail in the noted sections.

1. Training and Experience—Is the proposed requirement for examining organizations to ensure that examinations are not given to individuals who have also been instructed by the examining organization in the same subject area too prescriptive? Is the requirement for an examination to verify competency warranted, in light of current industry practice? What is the projected amount of time needed for specialty boards and examining organizations to prepare and submit an application to NRC or Agreement States?

2. Section 35.2—Should the term ''medium dose-rate remote afterloader'' be defined since it not used in the rule? (Requirements for medium dose-rate remote afterloaders have been grouped with high dose-rate remote afterloaders in this rulemaking.)

3. Section 35.6—Should this section be revised to require that licensees develop, implement, and maintain procedures for evaluating when a medical procedure would be considered to be a research procedure?

4. Section 35.24—Will the deletion of the requirement for a Radiation Safety Committee and proposed new requirement for the Radiation Safety Officer to acknowledge, in writing, responsibility for implementing the radiation protection program impact the licensee's effectiveness in carrying out its radiation protection program? In particular, will this combination of changes actually reduce the effectiveness of radiation protection programs and will the radiation safety officer be provided appropriate tools and channels through which to raise safety concerns to the highest levels of management. If a requirement for a committee, to oversee the radiation safety program, was included in the final rule, should the rule language explicitly require that the radiation safety officer be a member of that committee?

5. Section 35.75—Should any changes be made to the release criteria specified in this section?

6. Section 35.92—Is it appropriate to delete the requirement to hold byproduct material for a minimum of ten half-lives?

7. Section 35.315—Should the requirement for a private room with a private sanitary facility be maintained in the final rule?

8. Section 35.415—Should the requirement for a licensee to not quarter a patient in the same room as an individual who is not receiving radiation therapy be maintained in the final rule?

9. Section 35.432—Should the final rule contain a requirement for the licensee to perform full calibration measurements on brachytherapy sources before first use? Should the final rule allow licensees to rely on the brachytherapy source output provided by the manufacturer or distributor if the dosimetry equipment used by the manufacturer or distributor met the calibration requirements in § 35.630? How should sources be calibrated if there is no standard traceable to the National Institute of Standards and Technology? What is the estimated number of short- and long-lived brachytherapy sources that will need to be calibrated by the licensee on an annual basis and how long will it take to perform the calibration? Will licensees need to procure additional equipment to perform the calibrations?

10. Section 35.605—Should the restrictions in paragraph (a) of the proposed rule apply to low dose-rate remote afterloaders?

11. Section 35.615—Should the requirements in this section be waived for licensees that are using remote afterloaders with beta-emitting sources?

12. Section 35.644—Should the restrictions for electrical interlocks and audiovisual systems apply to low dose-rate remote afterloaders?

13. Section 35.981—What is the impact of deleting this section?

14. Subpart L—Should all recordkeeping requirements be grouped into one subpart or should they be incorporated into the section requiring the record?

15. Subpart M—Should all reporting requirements be grouped into one subpart or should they be incorporated into the section requiring the report?

16. Section 35.3045—Do the proposed rule changes adequately address patient intervention and wrong treatment site?

17. Section 35.3047—Should the Abnormal Occurrence Policy Statement criteria for reporting of exposures to an embryo/fetus or nursing child be modified? Is there a better term than ''responsible relative or guardian'' that could be applied to those situations where the mother is not notified, e.g., in the referring physician's medical judgment telling the mother would be harmful; the mother is a minor; or the mother is not competent to make decisions regarding medical care? What is the impact of the proposed reporting requirement on licensee procedures, activities, or medical practices?

V. Coordination With The Advisory Committee on the Medical Uses of Isotopes

The Advisory Committee on the Medical Uses of Isotopes (ACMUI) is an advisory body established to advise the NRC staff on matters that involve the administration of radioactive material and radiation from radioactive material. At the public ACMUI meetings on September 25–26, 1997, and March 1–2, 1998, held in Rockville, MD., the NRC staff presented alternatives for major cross-cutting issues related to revising Part 35, recommendations for revising the NRC's Medical Use Policy Statement, and draft proposed rule text.

These meetings were transcribed. The ACMUI's comments at the September 1997 meeting are summarized in ''Summary of Discussion: Meeting of the Advisory Committee on the Medical Uses of Isotopes (ACMUI) Held in Rockville, Maryland on September 25–26, 1997'' (April 17, 1998). The summary document is available for inspection at the NRC Public Document Room, 2120 L Street NW. (Lower Level), Washington, DC. Single copies of the summary document are available as indicated in the **FOR FURTHER INFORMATION CONTACT** section of this document. A brief summary of the ACMUI positions on the major crosscutting issues associated with this rulemaking is provided in Section III of the Supplementary Information section of this document.

Working group members also met with separate ACMUI subcommittees for diagnostic and therapeutic medical uses on February 9–10, 1998 (Rockville, MD.) and February 12–13, 1998 (Freeport, IL.), respectively. The subcommittee meetings provided the Working Group with an opportunity to discuss in depth the specific provisions of the draft proposed rule with ACMUI members.

VI. Coordination With NRC Agreement States

NRC staff discussed the proposed revision of Part 35 with representatives of the Agreement States at a workshop on October 18, 1997. The workshop commentary was transcribed, and the participant's comments are summarized in ''Summary of Discussion: Facilitated Public Workshop on NRC's Medical Rulemaking Initiative Held at All Agreement States Meeting, Los Angeles, California, October 18, 1997'' (April 17, 1998). The summary document is available for inspection at the NRC Public Document Room, 2120 L Street NW. (Lower Level), Washington, DC. Single copies of the summary document are available as indicated in the **FOR FURTHER INFORMATION CONTACT** section of this document. A brief summary of the workshop participants' positions on the major cross-cutting issues associated with this rulemaking is provided in Section III of the **SUPPLEMENTARY INFORMATION** section of this document.

Both the Working Group and Steering Group that developed the draft proposed rule included representatives of Agreement States. The Agreement State representative on the Working Group is also a member of the Conference of Radiation Control Directors' Suggested State Regulation Committee on Medical Regulation, which is working toward parallel development of suggested state medical regulations. State participation in the process has provided an early opportunity for State input and should enhance development of corresponding rules in State regulations. In addition, it will allow the State staff to assess the potential impacts of NRC draft language on the regulation of non-Atomic Energy Act materials used in medical diagnosis, treatment, or research in the States.

VII. Consistency With Medical Policy Statement

The Commission is proposing a revision to its General Policy on the Regulation of the Medical Uses of Radioisotopes that was issued on February 9, 1979 (44 FR 8424), as part of the efforts undertaken to revise 10 CFR Part 35. The proposed revision and detailed discussion on the need for the revision is being published for comment in the **Federal Register** concurrently with the proposed revision to Part 35. Because of the nature of the proposed revision to the policy, consistency with each policy will be discussed separately.

Consistency With the Proposed Revision to the Medical Use Policy Statement

The proposed revision to Part 35 is consistent with the Commission's proposed revision to the Medical Use Policy Statement.

The first statement of the proposed policy reads ''NRC will continue to regulate the uses of radionuclides in medicine as necessary to provide for the radiation safety of workers and the general public.'' The proposed rule is consistent with the statement because one of its purposes is to provide for the radiation safety of workers and individual members of the public, which is central to fulfillment of the Commission's statutory mandate to ''protect health and minimize danger to life.''

The second statement of the proposed policy reads ''NRC will not intrude into medical judgments affecting patients, except as necessary to provide for the radiation safety of workers and the general public.'' The proposed rule would also be consistent with this statement because its focus is on protecting the public and workers from patients who have been administered byproduct material or radiation from byproduct material for medical use.

The third statement of the proposed policy reads ''NRC will, when justified by the risk to patients, regulate the radiation safety of patients primarily to assure the use of radionuclides is in accordance with the physician's directions.'' The proposed rule is consistent with this statement because it includes provisions, where warranted by the risk, to provide high confidence that the authorized user's directions for the administration of byproduct material are followed.

The fourth statement of the proposed policy reads ''NRC, in developing a specific regulatory approach, will consider industry and professional standards that define acceptable

approaches of achieving radiation safety.'' The proposed rule is consistent with this statement because the rulemaking process included examining relevant industry and professional standards to determine if specific areas of concern were included in the standards, or whether regulatory requirements needed to be included in Part 35.

Consistency With the 1979 Medical Use Policy Statement

The proposed revision to Part 35 is generally consistent with the Commission's General Policy on the Regulation of the Medical Uses of Radioisotopes issued on February 9, 1979 (44 FR 8242).

The first statement of the policy reads ''The NRC will continue to regulate the medical uses of radioisotopes as necessary to provide for the radiation safety of workers and the general public.'' The proposed rule is consistent with this statement because its purpose is to provide for the radiation safety of workers and individual members of the public, which is central to fulfillment of the Commission's statutory mandate to ''protect health and minimize danger to life.''

The second statement of the policy is ''The NRC will regulate the radiation safety of patients where justified by the risk to patients and where voluntary standards, or compliance with these standards, are inadequate.'' The proposed rule is generally consistent with this statement. The proposed rule includes requirements to ensure the radiation safety of patients in areas where justified by the risk to patients. The rulemaking process included examining relevant industry and professional standards to determine if specific areas of concern were included in the standards, or whether additional regulatory requirements needed to be developed for inclusion in Part 35. The process did not include an assessment of licensee compliance with these standards. Where appropriate, the proposed revision includes references to published protocols approved by nationally recognized bodies. Where warranted by risk, key elements of the standards were included as performance objectives. Prescriptive compliance requirements for these performance objectives were not included in the rule because it is expected that licensees will use voluntary standards to achieve the objective. This approach is consistent with a performance-based, risk-informed rule.

The third statement of the policy reads, ''The NRC will minimize intrusion into medical judgments affecting patients and into other areas traditionally considered to be a part of the practice of medicine.'' The proposed rule is consistent with this statement because it includes no requirements associated with the diagnosis and treatment of patients.

VIII. Implementation

The Commission intends to have different implementation dates for particular requirements of this proposed rule. With one exception (discussed below), the proposed requirements would be effective 6 months after publication of the final rule in the **Federal Register**. Because the consolidated guidance document for medical use licensees is being developed in parallel with the revised regulatory requirements in Part 35, the Commission believes that a longer implementation period will not be necessary. The 6-month implementation period would allow the NRC time to train licensing and inspecting staff so that the revised Part 35 will be uniformly implemented; and provide licensees the time to understand the specific features of the revised Part 35, and to develop and implement any changes in their radiation safety programs or procedures that are required to comply with the revised requirements. NRC workshops might be offered for the benefit of licensees, Regional Offices, States, and others who are affected by the revision.

The Commission proposes that licensees would have up to 2 years after the effective date of the final rule to comply with the proposed training requirements for authorized users, authorized medical physicists, authorized nuclear pharmacists, and Radiation Safety Officers. During this 2-year period, licensees will have the option of complying with either the existing training requirements, which will be retained in subpart J, or the training requirements in subparts B and D–H of the proposed rule.

The 2-year implementation period will allow time for potential examining organizations and entities to prepare an application in accordance with Appendix A of the proposed rule; and for NRC to review and approve the applications submitted in accordance with Appendix A, and to review and approve certification of the specialty boards in §§ 35.50(a), 35.51(a), 35.55(a), 35.290(a), 35.292(a), 35.390(a), 35.490(a), 35.590(a), and 35.690(a). The 2-year time period will also allow individuals from Agreement States time to satisfy the proposed training requirements in order to work in NRC jurisdiction. After the 2-year implementation period, the requirements in subpart J will be deleted.

Section 35.10 of the proposed rule addresses how a licensee can determine if it must comply with the requirements of its license conditions or the requirements of the revised Part 35, when it becomes effective.

The Commission invites comments and suggestions on the effective date of implementation, including specific information on time and economic considerations, and on additional guidance or documents that would be needed or useful in implementing the proposed revision.

IX. Issues of Compatibility for Agreement States

10 CFR Part 35—Medical Use of Byproduct Material

Under the ''Policy Statement on Adequacy and Compatibility of Agreement State Programs'' approved by the Commission on June 30, 1997 (62 FR 46517), specific requirements within this rule should be adopted by Agreement States for purposes of compatibility or because of their health and safety significance. Implementing procedures for the Policy Statement establish specific categories which have been applied to categorize the requirements in Part 35. A Category ''A'' designation means the requirement is a basic radiation protection standard or deals with related definitions, signs, labels or terms necessary for a common understanding of radiation protection principles. Category ''A'' designated Agreement State requirements should be essentially identical to those of the NRC. A Category ''B'' designation means the requirement has significant direct transboundary implications. Category ''B'' designated Agreement State requirements should be essentially identical to those of the NRC. A Category ''C'' designation means the essential objectives of the requirement should be adopted by the State to avoid conflicts, duplications or gaps. The manner in which the essential objectives are addressed in the Agreement State requirement need not be the same as NRC provided the essential objectives are met. A Category ''D'' designation means the requirement does not need to be adopted by an Agreement State for purposes of compatibility. The Health and Safety (H&S) Category identifies requirements which are not required for compatibility, but which have particular health and safety significance. Agreement States should adopt the essential objectives of such

requirements in order to maintain an adequate program.

The following discussion identifies the compatibility designations for each section:

Subpart A, ''General Information,'' § 35.2, ''Definitions,'' is assigned to Compatibility Category ''D,'' with the exception of the terms ''Agreement State'', ''authorized user,'' ''medical use,'' ''prescribed dosage,'' ''prescribed dose,'' ''sealed source,'' ''treatment site'' and ''written directive.'' The terms ''Agreement State'' and ''sealed source'' are assigned to Compatibility Category ''B'' because they have significant direct transboundary implications. The terms ''authorized user,'' ''medical event,'' ''medical use,'' ''precursor event,'' ''prescribed dosage,'' ''prescribed dose,'' ''treatment site'' and ''written directive'' have been assigned to Compatibility Category ''C.'' Section 35.11, ''License required,'' is assigned to Compatibility Category ''C.''

Subpart B, ''General Administrative Requirements,'' is assigned to Compatibility Category ''D,'' with the exception of nine sections. Section 35.24, ''Authority and responsibilities for the radiation protection program'; § 35.27, ''Supervision'; § 35.40, ''Written directives'; and § 35.41(a), ''Procedures for administrations requiring a written directive'' are all assigned to the Health and Safety Category. Section 35.50, ''Training for radiation safety officer'; § 35.51, ''Training for authorized medical physicist'; § 35.55 ''Training for an authorized nuclear pharmacist'; § 35.57, ''Training for experienced Radiation Safety Officer, teletherapy or medical physicist, authorized user, and nuclear pharmacist;'' and § 35.59, ''Recentness of training'' are assigned to Compatibility Category ''C.''

Subpart C, ''General Technical Requirements,'' is assigned to Compatibility Category ''D,'' with the exception of five sections. Section 35.61, ''Calibration and check of survey instruments'; § 35.63(a), ''Determination of dosages of unsealed byproduct material for medical use'; § 35.67, ''Requirements for possession of sealed sources and brachytherapy sources'; and § 35.70(a) and (b), ''Surveys of ambient radiation exposure rate'' are assigned to the Health and Safety Category. Section 35.75, ''Release of individuals containing radiopharmaceuticals or implants,'' paragraph (a), is assigned to Compatibility Category ''C.''

Subpart D, ''Unsealed Byproduct Material—Low Dose'; and Subpart E, ''Unsealed Byproduct Material—High Dose'' are assigned to Compatibility Category ''D,'' except for § 35.100, ''Use of unsealed byproduct material for uptake, dilution, and excretion studies for which a written directive is not required'; § 35.200, ''Use of unsealed byproduct material for imaging and localization studies for which a written directive is not required'; § 35.204, ''Permissible molybdenum-99 concentration'; and § 35.300, ''Use of unsealed byproduct material for which a written directive is required,'' which are assigned to the Health and Safety Category. Section 35.290, ''Training for uptake, dilution, and excretion studies'; and § 35.292, ''Training for imaging and localization studies'; and § 35.390, ''Training for use of unsealed byproduct material for therapy or for use of unsealed byproduct material that requires a written directive,'' are assigned to Compatibility Category ''C.''

Subpart F, ''Manual Brachytherapy'' is assigned to Compatibility Category ''D,'' with the exception of five sections. Section 35.400, ''Use of sources for manual brachytherapy'; § 35.404(a) and (b), ''Radiation surveys of patients or human research subjects treated with implants'; § 35.406(a) and (b), ''Brachytherapy sources inventory'; and § 35.432(a-e), ''Full calibration measurements of brachytherapy sources'' are assigned to the Health and Safety Category. Section 35.490, ''Training for use of manual brachytherapy sources,'' is assigned to Compatibility Category ''C.''

Subpart G, ''Sealed Sources for Diagnosis,'' is assigned to Compatibility Category ''D,'' with the exception of Section 35.590, ''Training for use of sealed sources for diagnosis'' which is assigned to Compatibility Category ''C.''

Subpart H, ''Therapeutic Medical Devices,'' is assigned to Compatibility Category ''D,'' with the exception of 16 sections. The following sections are assigned to the Health and Safety Category: §§ 35.600; 35.604(a); 35.605; 35.610(a)(1), (a)(2), and (a)(4); 35.615(a), (b)(1), (b)(2), (d), and (e); 35.630; 35.632; 35.633; 35.635; 35.642; 35.643; 35.644; 35.645; 35.655; and 35.657. Section 35.690, ''Training for use of therapeutic medical devices'' is assigned to Compatibility Category ''C.''

Subpart J,'Training and Experience Requirements,'' Subpart K, ''Other Medical Uses of Byproduct Material or Radiation from Byproduct Material,'' and Subpart L, ''Records,'' are assigned to Compatibility Category ''D.''

Subpart M, ''Reports,'' is assigned to Compatibility Category ''C.''

Subpart N, ''Enforcement,'' is assigned to Compatibility Category ''D.''

Appendix A, ''Examining Organization or Entity,'' is assigned to Compatibility Category ''B.''

PART 20—STANDARDS FOR PROTECTION AGAINST RADIATION

Section 20.1301(a)(3) is assigned to Compatibility Category ''A.''

PART 32—SPECIFIC DOMESTIC LICENSES TO MANUFACTURE OR TRANSFER CERTAIN ITEMS CONTAINING BYPRODUCT MATERIAL

Section 32.72 (b)(1) and (b)(2)(ii) and § 32.74 (a) and (a)(3) are assigned to Compatibility Category ''B.''

As discussed under Section VIII of this document, the Commission proposes that licensees would have up to 2 years after the effective date of the final rule to comply with the proposed training requirements for authorized users, authorized medical physicists, authorized nuclear pharmacists, and Radiation Safety Officers. During this 2-year period, licensees would have the option of complying with either the existing training requirements in subpart J, or the proposed training requirements in subparts B and D through H. At the end of the 2 years, subpart J would be deleted and licensees would have to comply with the proposed training and experience criteria. The training and experience requirements in the proposed subpart J are assigned to Compatibility Category ''D,'' as they are in the current rule. Subparts B and D through H of the proposed rule have been assigned to Compatibility Category ''C'' for Agreement States. Under the ''Policy Statement on Adequacy and Compatibility of Agreement State Programs,'' approved by the Commission on June 30, 1997, the Agreement States are required to adopt NRC program elements (or promulgate regulations) required for compatibility within 3 years of the effective date of the NRC rulemaking. Therefore, the Commission recognizes that if an Agreement State does not revise its regulations until 2 years after the effective date of the NRC rule, it may choose not to include subpart J training and experience requirements in the newly promulgated rules, since the subpart J requirements are assigned to Compatibility Category ''D'' (not required for compatibility). In this case, the Agreement States would only be expected to adopt the proposed training and experience requirements in subparts B and D through H.

X. Finding of No Significant Environmental Impact: Availability

The Commission has determined under the National Environmental Policy Act of 1969, as amended, and the Commission's regulations in subpart A

of 10 CFR Part 51, that the proposed amendments, if adopted, would be a major Federal action but would not significantly affect the quality of the human environment, and therefore an environmental impact statement is not required. The proposed amendments would relax certain requirements and eliminate other procedural restrictions associated with the medical use of byproduct material. The Commission believes these proposed amendments would provide greater flexibility in the medical use of byproduct material while continuing to adequately protect public health and safety. The proposed amendments to Part 35, if adopted, would not cause any significant increase in radiation exposure to the public or radiation release to the environment beyond the exposures or releases currently resulting from the medical use of byproduct material. The proposed amendment to 10 CFR 20.1301 is expected to result in an increase in radiation exposure to the public. However, this alternative is consistent with generally accepted radiation protection principles, such as those expressed by the International Commission on Radiation Protection (ICRP), the National Council on Radiation Protection and Measurements (NCRP), and the International Atomic Energy Agency (IAEA).

The draft environmental assessment on which this determination is based is available for inspection at the NRC Public Document Room, 2120 L Street NW. (Lower Level), Washington, DC. Single copies of the environmental assessment are available as indicated in the **FOR FURTHER INFORMATION CONTACT** section of this document.

XI. Paperwork Reduction Act Statement

This proposed rule amends information collection requirements that are subject to the Paperwork Reduction Act of 1995 (44 U.S.C. 3501 *et seq.*). This rule has been submitted to the Office of Management and Budget for review and approval of the paperwork requirements.

Because the rule will reduce existing information collection requirements, the public burden for this information collection is expected to be decreased by approximately 74 hours per licensee. This reduction includes the time required for reviewing instructions, searching existing data sources, gathering and maintaining the data needed, and completing and reviewing the information collection. The U.S. Nuclear Regulatory Commission is seeking public comment on the potential impact of the information collection in the proposed rule and on the following issues:

1. Is the proposed information collection necessary for the proper performance of the functions of the NRC, including whether the information will have practical utility?
2. Is the estimate of burden accurate?
3. Is there a way to enhance the quality, utility, and clarity of the information to be collected?
4. How can the burden of the information collection be minimized, including the use of automated collection techniques?

Send comments on any aspect of this proposed information collection, including suggestions for further reducing the burden, to the Records Management Branch (T–6 F33), U.S. Nuclear Regulatory Commission, Washington, DC 20555–0001, or by Internet electronic mail at BJS1@nrc.gov; and to the Desk Officer, Office of Information and Regulatory Affairs, NEOB–10202, (3150–0010 and 3150–0120), Office of Management and Budget, Washington, DC, 20503.

Comments to OMB on the information collections or on the above issues should be submitted by September 14, 1998. Comments received after this date will be considered if it is practical to do so, but assurance of consideration cannot be given to comments received after this date.

Public Protection Notification

If an information collection does not display a currently valid OMB control number, the NRC may not conduct or sponsor, and a person is not required to respond to, the information collection.

XII. Regulatory Analysis

The Commission has prepared a draft regulatory analysis for the proposed rule. The analysis examines the costs and benefits of the alternatives considered by the Commission. The draft analysis is available for inspection at the NRC Public Document Room, 2120 L Street NW. (Lower Level), Washington, DC. Single copies of the regulatory analysis are available as indicated in the **FOR FURTHER INFORMATION CONTACT** section of this document.

The Commission requests public comment on the draft regulatory analysis. Comments on the draft regulatory analysis may be submitted to the NRC as indicated under the **ADDRESSES** section of this document.

XIII. Regulatory Flexibility Analysis

The NRC has prepared an initial regulatory flexibility analysis of the impact of this proposed rule on small entities. The preliminary regulatory flexibility analysis indicates that the proposed rule will have an economic impact of approximately $8,000 annually on medical licensees, of which 36 percent are small entities. However, the NRC notes that this would be a substantial reduction in the cost to the average licensee under the current regulations. The NRC estimates that the proposed requirements would reduce the annual cost to an average medical licensee by approximately $1500. The NRC believes that the proposed alternative is the least costly alternative that provides adequate protection from radiation exposure for patients and workers. The regulatory flexibility analysis appears as Appendix A to this document.

Because of the widely differing conditions under which small medical licensees operate, the NRC is seeking comments on the impact of the rule and any suggested modifications that may affect its economic impact. Any small medical licensee that would be subject to this regulation that determines, because of its size, that it is likely to bear a disproportionate adverse economic impact, should notify the Commission of this in a comment that indicates—

(a) The licensee's size and how this proposed regulation would result in a significant economic burden upon the licensee as compared to the economic burden on a larger licensee;

(b) How the proposed regulations could be modified to take into account the licensee's differing needs or capabilities;

(c) The benefits that would accrue, or the detriments that would be avoided, if the proposed regulations were modified as suggested under paragraph (b) above;

(d) How the proposed regulation, as modified, would more closely equalize its impact as opposed to providing special advantages to any individual licensee or groups of licenses; and

(e) How the proposed regulations, as modified, would still adequately protect the public health and safety.

The comments should be sent to the NRC as indicated under the **ADDRESSES** section of this document.

XIV. Backfit Analysis

The NRC has determined that the backfit rule does not apply to this proposed rule and, therefore, that a backfit analysis is not required for this proposed rule because these amendments would not involve any provision that would impose backfits as defined in 10 CFR Chapter I.

List of Subjects

10 CFR Part 20

Byproduct material, Criminal penalties, Licensed material, Nuclear materials, Nuclear power plants and reactors, Occupational safety and health, Packaging and containers, Radiation protection, Reporting and recordkeeping requirements, Special nuclear material, Source material, Waste treatment and disposal.

10 CFR Part 32

Byproduct material, Criminal penalties, Labeling, Nuclear materials, Radiation Protection, Reporting and recordkeeping requirements.

10 CFR Part 35

Byproduct material, Criminal penalties, Drugs, Health facilities, Health professions, Medical devices, Nuclear materials, Occupational safety and health, Radiation protection, Reporting and recordkeeping requirements.

For the reasons set out in the preamble and under the authority of the Atomic Energy Act of 1954, as amended, the Energy Reorganization Act of 1974, as amended, and 5 U.S.C. 553, the NRC is proposing to adopt the following amendments to 10 CFR parts 20, 32 and 35.

PART 20—STANDARDS FOR PROTECTION AGAINST RADIATION

1. The authority citation for Part 20 continues to read as follows:

Authority: Secs. 53, 63, 65, 81, 103, 104, 161, 182, 186, 68 Stat. 930, 933, 935, 936, 937, 948, 953, 955, as amended, sec. 1701, 106 Stat. 2951, 2952, 2953 (42 U.S.C. 2073, 2093, 2095, 2111, 2133, 2134, 2201, 2232, 2236, 2297f), secs. 201, as amended, 202, 206, 88 Stat. 1242, as amended, 1244, 1246 (42 U.S.C. 5841, 5842, 5846).

2. In § 20.1301, paragraph (a)(3) is added to read as follows:

§ 20.1301 Dose limits for individual members of the public.

(a) * * *

(3) Notwithstanding paragraph (a)(1) of this section, a licensee may permit visitors to individuals who are not released in accordance with § 35.75 to receive a radiation dose greater than (1 mSv) 0.1 rem, but not to exceed (5 mSv) 0.5 rem, if the authorized user, as defined in 10 CFR part 35, determines that it is appropriate.

* * * * *

PART 32—SPECIFIC DOMESTIC LICENSES TO MANUFACTURE OR TRANSFER CERTAIN ITEMS CONTAINING BYPRODUCT MATERIAL

3. The authority citation for Part 32 continues to read as follows:

Authority: Secs. 81, 82, 161, 182, 183, 68 Stat. 935, 948, 953, 954, as amended (42 U.S.C. 2111, 2201, 2232, 2233); sec. 201, 88 Stat. 1242, as amended (42 U.S.C. 5841).

§ 32.72 [Amended]

4. In § 32.72, in paragraph (b)(1), the reference to ''10 CFR 35.25'' is revised to read ''10 CFR 35.27'' and in paragraph (b)(2)(ii), the reference to ''10 CFR 35.980(b) and 35.972'' is revised to read ''10 CFR 35.55(b) and 35.59 or 10 CFR 35.980(b) and 35.972.''

§ 32.74 [Amended]

5. In § 32.74, in paragraph (a), the reference to ''§§ 35.400 and 35.500'' is revised to read ''§§ 35.400, 35.500, and 35.600'' and in paragraph (a)(3), the reference to ''§§ 35.57, 35.400, or 35.500'' is revised to read ''§§ 35.400, 35.500, and 35.600.''

6. 10 CFR Part 35 is revised to read as follows:

PART 35—MEDICAL USE OF BYPRODUCT MATERIAL

Subpart A—General Information

Sec.
35.1 Purpose and scope.
35.2 Definitions.
35.5 Maintenance of records.
35.6 Provisions for research involving human subjects.
35.7 FDA, other Federal, and State requirements.
35.8 Information collection requirements: OMB approval.
35.10 Implementation.
35.11 License required.
35.12 Application for license, amendment, or renewal.
35.13 License amendments.
35.14 Notifications.
35.15 Exemptions regarding Type A specific licenses of broad scope.
35.18 License issuance.
35.19 Specific exemptions.

Subpart B—General Administrative Requirements

35.24 Authority and responsibilities for the radiation protection program.
35.26 Radiation protection program changes.
35.27 Supervision.
35.40 Written directives.
35.41 Procedures for administrations requiring a written directive.
35.49 Suppliers for sealed sources or devices for medical use.
35.50 Training for Radiation Safety Officer.
35.51 Training for an authorized medical physicist.
35.55 Training for an authorized nuclear pharmacist.
35.57 Training for experienced Radiation Safety Officer, teletherapy or medical physicist, authorized user, and nuclear pharmacist.
35.59 Recentness of training.

Subpart C—General Technical Requirements

35.60 Possession, use, calibration, and check of instruments to measure the activity of photon-emitting radionuclides.
35.61 Calibration and check of survey instruments.
35.62 Possession, use, calibration, and check of instruments to measure dosages of alpha- or beta-emitting radionuclides.
35.63 Determination of dosages of unsealed byproduct material for medical use.
35.65 Authorization for calibration and reference sources.
35.67 Requirements for possession of sealed sources and brachytherapy sources.
35.69 Labeling and shielding of vials and syringes.
35.70 Surveys for ambient radiation exposure rate.
35.75 Release of individuals containing radiopharmaceuticals or implants.
35.80 Provision of mobile service.
35.92 Decay-in-storage.

Subpart D—Unsealed Byproduct Material—Low Dose

35.100 Use of unsealed byproduct material for uptake, dilution, and excretion studies for which a written directive is not required.
35.200 Use of unsealed byproduct material for imaging and localization studies for which a written directive is not required.
35.204 Permissible molybdenum–99 concentration.
35.290 Training for uptake, dilution, and excretion studies.
35.292 Training for imaging and localization studies.

Subpart E—Unsealed Byproduct Material—High Dose

35.300 Use of unsealed byproduct material for which a written directive is required.
35.310 Safety instruction.
35.315 Safety precautions.
35.390 Training for use of unsealed byproduct material for therapy or for use of unsealed byproduct material that requires a written directive.

Subpart F—Manual Brachytherapy

35.400 Use of sources for manual brachytherapy.
35.404 Radiation surveys of patients or human research subjects treated with implants.
35.406 Brachytherapy sources inventory.
35.410 Safety instruction.
35.415 Safety precautions.
35.432 Full calibration measurements of brachytherapy sources.
35.490 Training for use of manual brachytherapy sources.

Subpart G—Sealed Sources for Diagnosis

35.500 Use of sealed sources for diagnosis.
35.590 Training for use of sealed sources for diagnosis.

Subpart H—Therapeutic Medical Devices

35.600 Use of a sealed source in a device for therapeutic medical uses.
35.604 Radiation surveys of patients and human research subjects treated with remote afterloaders.
35.605 Installation, maintenance, and repair.
35.610 Safety procedures and instructions for remote afterloaders, teletherapy units, and gamma stereotactic radiosurgery units.
35.615 Safety precautions for remote afterloaders, teletherapy units, and gamma stereotactic radiosurgery units.
35.630 Dosimetry equipment.
35.632 Full calibration measurements on teletherapy units.
35.633 Full calibration measurements on remote afterloaders.
35.635 Full calibration measurements on gamma stereotactic radiosurgery units.
35.642 Periodic spot-checks for teletherapy units.
35.643 Periodic spot-checks for high dose-rate and pulsed dose-rate remote afterloaders.
35.644 Periodic spot-checks for low dose-rate remote afterloaders.
35.645 Periodic spot-checks for gamma stereotactic radiosurgery units.
35.647 Additional technical requirements for mobile remote afterloaders.
35.652 Radiation surveys.
35.655 Five-year inspection for teletherapy and gamma stereotactic radiosurgery units.
35.657 Therapy-related computer systems.
35.690 Training for use of therapeutic medical devices.

Subpart I—Reserved

Subpart J—Training and Experience Requirements

35.900 Radiation Safety Officer.
35.910 Training for uptake, dilution, and excretion studies.
35.920 Training for imaging and localization studies.
35.930 Training for therapeutic use of unsealed byproduct material.
35.932 Training for treatment of hyperthyroidism.
35.934 Training for treatment of thyroid carcinoma.
35.940 Training for use of brachytherapy sources.
35.941 Training for ophthalmic use of strontium-90.
35.950 Training for use of sealed sources for diagnosis.
35.960 Training for use of therapeutic medical devices.
35.961 Training for an authorized medical physicist.
35.980 Training for an authorized nuclear pharmacist.
35.981 Training for experienced nuclear pharmacists.

Subpart K—Other Medical Uses of Byproduct Material or Radiation from Byproduct Material

35.1000 Other medical uses of byproduct material or radiation from byproduct material.

Subpart L—Records

35.2024 Records of authority and responsibilities for radiation protection programs.
35.2026 Records of radiation program safety changes.
35.2040 Records of written directives.
35.2045 Records of medical events.
35.2060 Records of instrument calibrations.
35.2061 Records of radiation survey instrument calibrations.
35.2063 Records of dosages of unsealed byproduct material for medical use.
35.2067 Records for possession of sealed sources and brachytherapy sources.
35.2070 Records of surveys for ambient radiation exposure rate.
35.2075 Records of the release of individuals containing radiopharmaceuticals or implants.
35.2080 Records of administrative and technical requirements that apply to the provision of mobile services.
35.2092 Records of waste disposal.
35.2204 Records of molybdenum-99 concentration.
35.2310 Records of instruction and training.
35.2404 Records of radiation surveys of patients and human research subjects.
35.2406 Records of brachytherapy source inventory.
35.2432 Records of full calibrations on brachytherapy sources.
35.2605 Records of installation, maintenance, and repair.
35.2630 Records of dosimetry equipment.
35.2632 Records of teletherapy full calibrations.
35.2633 Records of remote afterloader full calibrations.
35.2635 Records of gamma stereotactic radiosurgery unit full calibrations.
35.2642 Records of periodic spot-checks for teletherapy units.
35.2643 Records of periodic spot-checks for remote afterloaders.
35.2645 Records of periodic spot-checks for gamma stereotactic radiosurgery units.
35.2647 Records of additional technical requirements for mobile remote afterloaders.
35.2652 Records of surveys of therapeutic treatment units.
35.2655 Records of 5-year inspection for teletherapy and gamma stereotactic radiosurgery units.

Subpart M—Reports

35.3045 Reports of medical events.
35.3047 Report of a dose to an embryo/fetus or a nursing child.
35.3067 Reports of leaking sources.

Subpart N—Enforcement

35.4001 Violations.
35.4002 Criminal penalties.
Appendix A to 10 CFR Part 35—Examining Organization or Entity

Authority: Secs. 81, 161, 182, 183, 68 Stat. 935, 948, 953, 954, as amended (42 U.S.C. 2111, 2201, 2232, 2233); sec. 201, 88 Stat. 1242, as amended (42 U.S.C. 5841).

Subpart A—General Information

§ 35.1 Purpose and scope.

This part prescribes requirements and provisions for the medical use of byproduct material and for issuance of specific licenses authorizing the medical use of this material. These requirements and provisions provide for the radiation safety of workers, the general public, patients, and human research subjects. The requirements and provisions of this part are in addition to, and not in substitution for, others in this chapter. The requirements and provisions of parts 19, 20, 21, 30, 71, 170, and 171 of this chapter apply to applicants and licensees subject to this part unless specifically exempted.

§ 35.2 Definitions.

Address of use means the building or buildings that are identified on the license and where byproduct material may be received, used, or stored.

Agreement State means any State with which the Commission or the Atomic Energy Commission has entered into an effective agreement under subsection 274b of the Atomic Energy Act of 1954, as amended.

Area of use means a portion of an address of use that has been set aside for the purpose of receiving, using, or storing byproduct material.

Authorized medical physicist means a physicist who—

(1) Meets the requirements in §§ 35.51(a) and 35.59 or §§ 35.961 and 35.59; or

(2) Is identified as a medical physicist on a Commission or Agreement State license; or

(3) Is identified as a medical physicist on a permit issued by a Commission or Agreement State specific licensee of broad scope that is authorized to permit the use of byproduct material.

Authorized nuclear pharmacist means a pharmacist who—

(1) Meets the requirements in §§ 35.55(a) and 35.59 or §§ 35.980(a) and 35.59; or

(2) Is identified as an authorized nuclear pharmacist on a Commission or Agreement State license that authorizes the use of byproduct material in the practice of nuclear pharmacy; or

(3) Is identified as an authorized nuclear pharmacist on a permit issued by a Commission or Agreement State specific licensee of broad scope that is authorized to permit the use of byproduct material in the practice of nuclear pharmacy; or

(4) Is approved as an authorized nuclear pharmacist by a nuclear pharmacy authorized by the Commission to approve authorized nuclear pharmacists.

Authorized user means a physician, dentist, or podiatrist who—

(1) Meets the requirements in §§ 35.290(a), 35.292(a), 35.390(a), 35.490(a), 35.590(a), or 35.690(a) and § 35.59, or §§ 35.910, 35.920, 35.930, 35.932, 35.934, 35.940, 35.941, 35.950, 35.960 and § 35.59; or

(2) Is identified as an authorized user on a Commission or Agreement State license that authorizes the medical use of byproduct material; or

(3) Is identified as an authorized user on a permit issued by a Commission or Agreement State specific licensee of broad scope that is authorized to permit the medical use of byproduct material.

Brachytherapy source means a radioactive sealed source or a manufacturer-assembled source train or a combination of these sources that is designed to deliver a therapeutic dose within a distance of a few centimeters.

Dedicated check source means a radioactive source that is used to assure the constant operation of a radiation detection or measurement device over several months or years.

Dentist means an individual licensed by a State or Territory of the United States, the District of Columbia, or the Commonwealth of Puerto Rico to practice dentistry.

Diagnostic clinical procedures manual means a collection of written procedures that describes each method (and other instructions and precautions) by which the licensee performs diagnostic clinical procedures; where each diagnostic clinical procedure has been approved by the authorized user and includes the radiopharmaceutical, dosage, and route of administration.

High dose-rate remote afterloader, as used in this part, means a device that remotely delivers a dose rate in excess of 2 gray (200 rads) per hour at the point or surface where the dose is prescribed.

Low dose-rate remote afterloader as used in this part, means a device that remotely delivers a dose rate of less than 2 gray (200 rads) per hour at the point or surface where the dose is prescribed.

Management means the chief executive officer or that person's delegate or delegates.

Medical event means an event that meets the criteria in § 35.3045(a).

Medical institution means an organization in which several medical disciplines are practiced.

Medical use means the intentional internal or external administration of byproduct material or the radiation from byproduct material to patients or human research subjects under the supervision of an authorized user.

Mobile service means the transportation and medical use of byproduct material by the same licensee at temporary jobsites.

Output means the exposure rate, dose rate, or a quantity related in a known manner to these rates from a teletherapy unit for a specified set of exposure conditions.

Pharmacist means an individual licensed by a State or Territory of the United States, the District of Columbia, or the Commonwealth of Puerto Rico to practice pharmacy.

Physician means a medical doctor or doctor of osteopathy licensed by a State or Territory of the United States, the District of Columbia, or the Commonwealth of Puerto Rico to prescribe drugs in the practice of medicine.

Podiatrist means an individual licensed by a State or Territory of the United States, the District of Columbia, or the Commonwealth of Puerto Rico to practice podiatry.

Prescribed dosage means the quantity of radiopharmaceutical activity as documented—

(1) In a written directive; or

(2) Either in the diagnostic clinical procedures manual or in any appropriate record in accordance with the directions of the authorized user for diagnostic procedures.

Prescribed dose means—

(1) For gamma stereotactic radiosurgery, the total dose as documented in the written directive;

(2) For teletherapy, the total dose and dose per fraction as documented in the written directive;

(3) For brachytherapy, either the total source strength and exposure time or the total dose, as documented in the written directive; or

(4) For remote afterloaders, the total dose as documented in the written directive.

Pulsed dose-rate remote afterloader means a special type of remote afterloading device that uses a single source capable of delivering dose rates in the ''high dose rate'' range, but is used to simulate the radiobiology of a low dose rate treatment by inserting the source for a given fraction of each hour.

Radiation Safety Officer means the individual identified as the Radiation Safety Officer on a Commission license who—

(1) Meets the requirements in §§ 35.50 and 35.59 or §§ 35.900 and 35.59; or

(2) Is identified as a Radiation Safety Officer on a Commission or Agreement State license.

Sealed source means any byproduct material that is encased in a capsule designed to prevent leakage or escape of the byproduct material.

Sealed Source and Device Registry means the national registry that contains all the registration certificates, generated by both NRC and the Agreement States, that summarize the radiation safety information for the sealed sources and devices and describe the licensing and use conditions approved for the product.

Stereotactic radiosurgery means the use of external radiation in conjunction with a stereotactic guidance device to very precisely deliver a dose to a tissue volume.

Structured educational program means an educational program designed to impart particular knowledge and practical education through interrelated studies and supervised training.

Temporary jobsite means a location where mobile services are conducted other than those location(s) of use authorized on the license.

Treatment site means the anatomical description of the tissue intended to receive a radiation dose, as described in a written directive.

Unit dosage means a dosage intended for medical use in a single patient or human research subject that has been obtained from a manufacturer or preparer licensed pursuant to § 32.72 of this chapter or equivalent Agreement State requirements.

Written directive means an authorized user's written order for the administration of byproduct material or radiation from byproduct material to a specific patient or human research subject, as specified in § 35.40.

§ 35.5 Maintenance of records.

Each record required by this part must be legible throughout the retention period specified by each Commission regulation. The record may be the original or a reproduced copy or a microform provided that the copy or microform is authenticated by authorized personnel and that the microform is capable of producing a clear copy throughout the required retention period. The record may also be stored in electronic media with the capability for producing legible, accurate, and complete records during the required retention period. Records such as letters, drawings, and specifications, must include all pertinent information such as stamps, initials, and signatures. The licensee shall maintain adequate safeguards against tampering with and loss of records.

§ 35.6 Provisions for research involving human subjects.

A licensee may conduct research involving human subjects using byproduct material provided that the research is conducted, funded, supported, or regulated by another Federal Agency which has implemented the Federal Policy for the Protection of Human Subjects. Otherwise, a licensee shall apply for and receive approval of a specific amendment to its NRC license before conducting such research. Both types of licensees shall, at a minimum, obtain informed consent from the human subjects and obtain prior review and approval of the research activities by an ''Institutional Review Board'' in accordance with the meaning of these terms as defined and described in the Federal Policy for the Protection of Human Subjects.

§ 35.7 FDA, other Federal, and State requirements.

Nothing in this part relieves the licensee from complying with applicable FDA, other Federal, and State requirements governing radioactive drugs or devices.

§ 35.8 Information collection requirements: OMB approval.

(a) The Commission has submitted the information collection requirements contained in this part to the Office of Management and Budget (OMB) for approval as required by the Paperwork Reduction Act (44 U.S.C. 3501 *et seq.*). The NRC may not conduct or sponsor, and a person is not required to respond to, a collection of information unless it displays a currently valid OMB control number. OMB has approved the information collection requirements in this part under control number 3150–0010.

(b) The approved information collection requirements contained in this part appear in §§ 35.6, 35.12, 35.13, 35.14, 35.24, 35.26, 35.27, 35.40, 35.41, 35.50, 35.51, 35.55, 35.60, 35.61, 35.62, 35.63, 35.67, 35.69, 35.70, 35.75, 35.80, 35.92, 35.204, 35.290, 35.292, 35.310, 35.315, 35.390, 35.404, 35.406, 35.410, 35.415, 35.432, 35.490, 35.590, 35.604, 35.605, 35.610, 35.630, 35.632, 35.633, 35.635, 35.642, 35.643, 35.644, 35.645, 35.647, 35.652, 35.655, 35.690, 35.900, 35.910, 35.920, 35.930, 35.940, 35.950, 35.960, 35.961, 35.980, 35.981, 35.2024, 35.2026, 35.2040, 35.2045, 35.2060, 35.2061, 35.2063, 35.2067, 35.2070, 35.2075, 35.2080, 35.2092, 35.2204, 35.2310, 35.2404, 35.2406, 35.2432, 35.2605, 35.2630, 35.2632, 35.2633, 35.2635, 35.2642, 35.2643, 35.2645, 35.2647, 35.2652, 35.2655, 35.3045, 35.3047, 35,3067, and Appendix A.

(c) This part contains information collection requirements in addition to those approved under the control number specified in paragraph (a) of this section. These information collection requirements and the control numbers under which they are approved as follows:

(1) In § 35.12, NRC Form 313, including NRC Forms 313A, and 313B which licensees may use to provide supplemental information, is approved under control number 3150–0120.

(2) [Reserved]

§ 35.10 Implementation.

(a) A licensee shall implement the provisions in this part on or before [date 6 months from publication of the Final Rule], with the exception of the requirements listed in paragraph (b) of this section.

(b) A licensee shall implement the training requirements in §§ 35.50(a), 35.51(a), 35.55(a), 35.59, 35.290(a), 35.292(a), 35.390(a), 35.490(a), 35.590(a), and 35.690(a) on or before [date—2 years from publication of the Final Rule].

(c) Prior to [date—2 years from publication of the Final Rule], a licensee shall satisfy the training requirements of this part for a Radiation Safety Officer, an authorized medical physicist, an authorized nuclear pharmacist, or an authorized user by complying with either:

(1) The appropriate training requirements in subpart J; or

(2) The appropriate training requirements in subpart B or subparts D through H.

(d) If the requirements of this part are more restrictive than the existing license condition, the licensee shall comply with this part unless exempted by paragraph (f) of this section.

(e) Any existing license condition that is more restrictive than a requirement in this part remains in effect until there is a license amendment or license renewal.

(f) If a license condition exempted a licensee from a provision of part 35 on [date—6 months from publication of the Final Rule], it will continue to exempt a licensee from the corresponding provision in this part.

(g) If a license condition cites provisions in part 35 that will be deleted on [date—6 months from publication of the Final Rule], then the license condition remains in effect until there is a license amendment or license renewal that modifies or removes this condition.

§ 35.11 License required.

(a) A person may not manufacture, produce, acquire, receive, possess, use, or transfer byproduct material for medical use except in accordance with a specific license issued by the Commission or an Agreement State, or as allowed in paragraph (b) or (c) of this section.

(b) An individual may receive, possess, use, or transfer byproduct material in accordance with the regulations in this chapter under the supervision of an authorized user as provided in § 35.27, unless prohibited by license condition.

(c) An individual may prepare unsealed byproduct material for medical use in accordance with the regulations in this chapter under the supervision of an authorized nuclear pharmacist or authorized user as provided in § 35.27, unless prohibited by license condition.

§ 35.12 Application for license, amendment, or renewal.

(a) An application must be signed by the management of the facility.

(b) An application for a license for medical use of byproduct material as described in §§ 35.100, 35.200, 35.300, 35.400, and 35.500, and for medical use of remote afterloaders in § 35.600, must be made by filing an original and one copy of NRC Form 313, ''Application for Material License.'' A request for a license amendment or renewal may be submitted as an original and one copy in letter format.

(c) Except for medical use of remote afterloaders, a separate license application must be filed for each medical use of byproduct material as described in § 35.600 by filing an original and one copy of NRC Form 313. A request for a license amendment or renewal may be submitted as an original and one copy in letter format.

(d) An application for a license for medical use of byproduct material as described in § 35.1000 must be made by filing an original and one copy of NRC Form 313.

(1) In addition to the information required in NRC Form 313, the application must also include information regarding any radiation safety aspects of the medical use of the material that is not addressed in subparts A through C of this part, as well as any specific information necessary for—

(i) Radiation safety precautions and instructions;

(ii) Training and experience of proposed users;

(iii) Methodology for measurement of dosages or doses to be administered to patients or human research subjects; and

(iv) Calibration, maintenance, and repair of instruments and equipment necessary for radiation safety.

(2) The applicant or licensee shall also provide any other information requested by the Commission in its review of the application.

(e) An applicant that satisfies the requirements specified in § 33.13 may apply for a Type A specific license of broad scope.

§ 35.13 License amendments.

A licensee shall apply for and must receive a license amendment—

(a) Before it receives or uses byproduct material for a type of use that is permitted under this part, but that is not authorized on the licensee's current license issued pursuant to this part;

(b) Before it permits anyone to work as an authorized user, authorized nuclear pharmacist, or authorized medical physicist under the license, except an individual who is—

(1) An authorized user who meets the requirements §§ 35.290(a), 35.292(a), 35.390(a), 35.490(a), 35.590(a), or 35.690(a) and § 35.59, or §§ 35.910, 35.920, 35.930, 35.932, 35.934, 35.940, 35.941, 35.950, 35.960 and § 35.59;

(2) An authorized nuclear pharmacist who meets the requirements in § 35.55(a) and § 35.59; or §§ 35.980 and 35.59;

(3) An authorized medical physicist who meets the requirements in § 35.51(a) and § 35.59; or §§ 35.961 and 35.59;

(4) Identified as an authorized user, an authorized nuclear pharmacist, or authorized medical physicist on a Commission or Agreement State license that authorizes the use of byproduct material in medical use or in the practice of nuclear pharmacy, respectively; or

(5) Identified as an authorized user, an authorized nuclear pharmacist, or authorized medical physicist on a permit issued by a Commission or Agreement State specific licensee of broad scope that is authorized to permit the use of byproduct material in medical use or in the practice of nuclear pharmacy, respectively.

(c) Before it changes Radiation Safety Officers;

(d) Before it orders byproduct material in excess of the amount, or radionuclide or form that is different than the radionuclide or form authorized on the license;

(e) Before it adds to or changes the areas identified in the application or on the license, except for areas where byproduct material is used in accordance with §§ 35.100 and 35.200; and

(f) Before it changes the address(es) of use identified in the application or on the license.

§ 35.14 Notifications.

(a) A licensee shall provide to the Commission a copy of the board certification, the Commission or Agreement State license, or the permit issued by a licensee of broad scope for each individual no later than 30 days after the date that the licensee permits the individual to work as an authorized user, an authorized nuclear pharmacist, an authorized medical physicist, pursuant to § 35.13 (b)(1) through (b)(5).

(b) A licensee shall notify the Commission by letter no later than 30 days after:

(1) An authorized user, an authorized nuclear pharmacist, a Radiation Safety Officer, or an authorized medical physicist permanently discontinues performance of duties under the license or has a name change;

(2) The licensee's mailing address changes;

(3) The licensee's name changes, but the name change does not constitute a transfer of control of the license as described in § 30.34(b) of this chapter; or

(4) The licensee has added to or changed the areas where byproduct material is used in accordance with §§ 35.100 and 35.200.

(c) The licensee shall mail the documents required in this section to the appropriate address identified in § 30.6 of this chapter.

§ 35.15 Exemptions regarding Type A specific licenses of broad scope.

A licensee possessing a Type A specific license of broad scope for medical use is exempt from—

(a) The provisions of § 35.13(b);

(b) The provisions of § 35.13(e) regarding additions to or changes in the areas of use only at the addresses specified in the license;

(c) The provisions of § 35.14(a);

(d) The provisions of § 35.14(b)(1) for an authorized user, an authorized nuclear pharmacist, or an authorized medical physicist; and

(e) The provisions of § 35.49(a).

§ 35.18 License issuance.

(a) The Commission shall issue a license for the medical use of byproduct material if—

(1) The applicant has filed Form NRC–313 ''Application for Materials License'' in accordance with the instructions in § 35.12;

(2) The applicant has paid any applicable fee as provided in part 170 of this chapter;

(3) The Commission finds the applicant equipped and committed to observe the safety standards established by the Commission in this chapter for the protection of the public health and safety; and

(4) The applicant meets the requirements of part 30 of this chapter.

(b) The Commission shall issue a license for mobile services if the applicant:

(1) Meets the requirements in paragraph (a) of this section; and

(2) Assures that individuals or human research subjects to whom radiopharmaceuticals or radiation from implants will be administered may be released following treatment in accordance with § 35.75.

§ 35.19 Specific exemptions.

The Commission may, upon application of any interested person or upon its own initiative, grant such exemptions from the regulations in this part as it determines are authorized by law and will not endanger life or property or the common defense and security and are otherwise in the public interest.

Subpart B—General Administrative Requirements

§ 35.24 Authority and responsibilities for the radiation protection program.

(a) In addition to the radiation protection program requirements of § 20.1101 of this chapter, a licensee's management must approve in writing—

(1) Requests for license application, renewal, or amendments before submittal to the Commission;

(2) Any individual before allowing that individual to work as an authorized user, authorized nuclear pharmacist, authorized medical physicist; and

(3) Radiation protection program changes that do not require a license amendment and are permitted under § 35.26;

(b) A licensee with multiple modalities or multiple users shall also develop, implement, and maintain written administrative procedures for interdepartmental/interdisciplinary coordination of the licensee's radiation protection program.

(c) A licensee's management shall appoint a Radiation Safety Officer, who agrees in writing to be responsible for implementing the radiation protection program. The licensee, through the Radiation Safety Officer, shall ensure that radiation safety activities are being performed in accordance with licensee-approved procedures and regulatory requirements in the daily operation of the licensee's radiation protection program.

(d) A licensee shall establish in writing the authority, duties, and responsibilities of the Radiation Safety Officer.

(e) A licensee shall provide the Radiation Safety Officer sufficient authority, organizational freedom, time, resources, and management prerogative, to—

(1) Identify radiation safety problems;

(2) Initiate, recommend, or provide corrective actions;

(3) Stop unsafe operations; and,

(4) Verify implementation of corrective actions.

(f) A licensee shall retain a record of actions taken pursuant to paragraphs (a), (c), and (d) of this section in accordance with § 35.2024.

§ 35.26 Radiation protection program changes.

(a) A licensee may revise its radiation protection program without Commission approval if—

(1) The revisions do not require an amendment under § 35.13;

(2) The revisions do not reduce radiation safety;

(3) The revisions have been reviewed and approved by the Radiation Safety Officer and licensee management; and

(4) The affected individuals are instructed on the revised program before the changes are implemented.

(b) A licensee shall retain a record of each change in accordance with § 35.2026.

§ 35.27 Supervision.

(a) A licensee that permits the receipt, possession, use, or transfer of byproduct material by an individual under the supervision of an authorized user or as allowed by § 35.11(b) shall—

(1) Instruct the supervised individual in the licensee's written radiation protection procedures, written directive procedures, regulations of this chapter, and license conditions with respect to the use of byproduct material; and

(2) Require the supervised individual to follow the instructions of the supervising authorized user for medical uses of radioactive material, written radiation protection procedures established by the licensee, regulations of this chapter; and license conditions with respect to the medical use of byproduct material.

(b) A licensee that permits the preparation of byproduct material for medical use by an individual under the supervision of an authorized nuclear pharmacist or physician who is an authorized user, as allowed by § 35.11(c), shall—

(1) Instruct the supervised individual in the preparation of byproduct material for medical use, as appropriate to that individual's use of byproduct material; and

(2) Require the supervised individual to follow the instructions of the supervising authorized user or authorized nuclear pharmacist regarding the preparation of byproduct material for medical use, the written radiation protection procedures established by the licensee and the regulations of this chapter, and license conditions.

(c) A licensee shall establish, implement, and maintain a policy for all supervised individuals to request clarification, as needed, from—

(1) The authorized user, before initiating or continuing any procedure that requires a written directive, if the supervised individual has any question about what should be done or how it should be done; and

(2) The authorized user or authorized nuclear pharmacist about the instructions and requirements provided to the supervised individual in accordance with paragraphs (a) and (b) of this section.

(d) A licensee that permits supervised activities under paragraph (a) and (b) of this section is responsible for the acts and omissions of the supervised individual.

§ 35.40 Written directives.

(a) A written directive must be prepared, dated, and signed by an authorized user prior to administration of I–131 sodium iodide greater than 1.11 Megabequerels (Mbq) (30 microcuries (μCi)), any therapeutic dosage of a radiopharmaceutical, or any therapeutic dose of radiation from byproduct material.[1]

(b) The written directive must contain the patient or human research subject's name and the following:

(1) For any administration of quantities greater than 1.11 MBq (30 μCi) of sodium iodide I–131: the dosage;

(2) For a therapeutic administration of a radiopharmaceutical other than sodium iodide I–131: the radiopharmaceutical, dosage, and route of administration;

(3) For gamma stereotactic radiosurgery: target coordinates (including gamma angle), collimator size, plug pattern, total dose for the treatment, and the total treatment volume;

(4) For teletherapy: the total dose, dose per fraction, number of fractions, treatment site, and overall treatment period;

(5) For remote afterloading brachytherapy: the radionuclide, treatment site, dose per fraction, number of fractions, and total dose; or

(6) For all other brachytherapy:

(i) Prior to implantation: treatment site, the radionuclide, number of sources and source strengths or dose; and

(ii) After implantation but prior to completion of the procedure: the radionuclide, treatment site, and total source strength and exposure time (or, equivalently, the total dose).

(c) The licensee shall retain the written directive in accordance with § 35.2040.

§ 35.41 Procedures for administrations requiring a written directive.

(a) For any administration requiring a written directive, the licensee shall develop, implement, and maintain written procedures to provide high confidence that:

(1) The patient's or human research subject's identity is verified before each administration; and

(2) Each administration is in accordance with the written directive.

(b) The procedures required by paragraph (a) of this section must, at a minimum, address—

(1) Verifying the identity of the patient or human research subject;

(2) Verifying that the specific details of the administration are in accordance with the written directive and treatment plan;

(3) Checking both manual and computer-generated dose calculations; and

(4) Verifying that any computer-generated dose calculations are correctly transferred into the consoles of therapeutic medical devices authorized by § 35.600.

§ 35.49 Suppliers for sealed sources or devices for medical use.

A licensee may use for medical use only—

[1] If, because of the emergent nature of the patient's condition, a delay in order to provide a written directive would jeopardize the patient's health, an oral directive will be acceptable, provided that the information contained in the oral directive is documented immediately in writing in the patient's record a written directive is prepared within 48 hours of the oral directive.

If, because of the patient's condition, a delay in order to provide a written revision to an existing written directive would jeopardize the patient's health, an oral revision to an existing written directive will be acceptable, provided that the oral revision is documented immediately in the patient's record and a revised written directive is signed by the authorized user within 48 hours of the oral revision.

Also, a written revision to an existing written directive may be made by any diagnostic or therapeutic procedure provided that the revision is dated and signed by an authorized user prior to the administration of the radiopharmaceutical dosage, the brachytherapy dose, the gamma stereotactic radiosurgery dose, the teletherapy dose, or the next teletherapy fractional dose.

(a) Sealed sources or devices manufactured, labeled, packaged, and distributed in accordance with a license issued pursuant to 10 CFR part 30 and § 32.74 of this chapter or the equivalent requirements of an Agreement State; or

(b) Teletherapy sources manufactured and distributed in accordance with a license issued pursuant to 10 CFR part 30 or the equivalent requirements of an Agreement State.

§ 35.50 Training for Radiation Safety Officer

Except as provided in § 35.57, the licensee shall require an individual fulfilling the responsibilities of the Radiation Safety Officer (RSO) as provided in § 35.24 to be an individual who—

(a) Is certified by a speciality board whose certification process includes all of the requirements in paragraph (b) of this section and whose certification has been approved by the Commission or;

(b)(1) Has completed a structured educational program consisting of both:

(i) 200 hours of didactic training in the following areas—

(A) Radiation physics and instrumentation;

(B) Radiation protection;

(C) Mathematics pertaining to the use and measurement of radioactivity;

(D) Radiation biology; and

(E) Radiation dosimetry; and

(ii) One year of full-time radiation safety experience under the supervision of the individual identified as the RSO on a Commission or Agreement State license that authorizes similar type(s) of use(s) of byproduct material involving the following;

(A) Shipping, receiving, and performing related radiation surveys;

(B) Using and performing checks for proper operation of dose calibrators, survey meters, and instruments used to measure radionuclides;

(C) Securing and controlling byproduct material;

(D) Using administrative controls to avoid mistakes in the administration of byproduct material;

(E) Using procedures to prevent or minimize radioactive contamination and using proper decontamination procedures; and

(F) Disposing of byproduct material; and

(2) Has obtained written certification, signed by a preceptor RSO, that the requirements in paragraph (b)(1) of this section have been satisfactorily completed and that the individual has achieved a level of competency sufficient to independently function as an RSO for medical uses of byproduct material; and

(3) Following completion of the requirements in paragraph (b) of this section, has demonstrated sufficient knowledge in radiation safety commensurate with the use requested by passing an examination given by an organization or entity approved by the Commission in accordance with appendix A of this part; or

(c) Is an authorized user, authorized medical physicist, or authorized nuclear pharmacist identified on the licensee's license and has experience with the radiation safety aspects of similar types of use of byproduct material for which the individual has RSO responsibilities.

§ 35.51 Training for authorized medical physicist.

The licensee shall require the authorized medical physicist to be an individual who—

(a) Is certified by a speciality board whose certification process includes all of the training and experience requirements in paragraph (b) of this section and whose certification has been approved by the Commission; or

(b)(1) Holds a master's or doctor's degree in physics, biophysics, radiological physics, medical physics, or health physics, or an equivalent training program approved by the NRC, and has completed one year of full-time training in therapeutic radiological physics and an additional year of full-time practical experience under the supervision of a medical physicist at a medical institution that includes the tasks listed in §§ 35.67, 35.632, 35.633, 35.635, 35.642, 35.643, 35.644, 35.645 and 35.652, as applicable; and

(2) Has obtained written certification, signed by a preceptor authorized medical physicist, that the requirements in paragraph (b)(1) in this section have been satisfactorily completed and that the individual has achieved a level of competency sufficient to independently function as an authorized medical physicist; and,

(3) Following completion of the requirements in paragraph (b)(1) of this section, has demonstrated sufficient knowledge in radiation safety commensurate with the use requested by passing an examination given by an organization or entity approved by the Commission in accordance with appendix A of this part.

§ 35.55 Training for an authorized nuclear pharmacist.

The licensee shall require the authorized nuclear pharmacist to be a pharmacist who—

(a) Is certified as a nuclear pharmacist by a speciality board whose certification process includes all of the requirements in paragraph (b) of this section and whose certification has been approved by the Commission, or

(b)(1) Has completed 700 hours in a structured educational program consisting of both:

(i) Didactic training in the following areas—

(A) Radiation physics and instrumentation;

(B) Radiation protection;

(C) Mathematics pertaining to the use and measurement of radioactivity;

(D) Chemistry of byproduct material for medical use; and

(E) Radiation biology; and

(ii) Supervised practical experience in a nuclear pharmacy involving—

(A) Shipping, receiving, and performing related radiation surveys;

(B) Using and performing checks for proper operation of dose calibrators, survey meters, and, if appropriate, instruments used to measure alpha- or beta-emitting radionuclides;

(C) Calculating, assaying, and safely preparing dosages for patients or human research subjects;

(D) Using administrative controls to avoid medical events in the administration of byproduct material; and

(E) Using procedures to prevent or minimize radioactive contamination and using proper decontamination procedures; and

(2) Has obtained written certification, signed by a preceptor authorized nuclear pharmacist, that the requirements in paragraph (b)(1) have been satisfactorily completed and that the individual has achieved a level of competency sufficient to independently operate a nuclear pharmacy; and

(3) Following completion of the requirements in paragraph (b)(1) of this section, has demonstrated sufficient knowledge in radiation safety commensurate with the use requested by passing an examination given by an organization or entity approved by the Commission in accordance with appendix A of this part.

§ 35.57 Training for experienced Radiation Safety Officer, teletherapy or medical physicist, authorized user, and nuclear pharmacist.

(a) An individual identified as a Radiation Safety Officer, a teletherapy or medical physicist, or a nuclear pharmacist on a Commission or Agreement State license before [date—6 months from publication of the Final Rule] need not comply with the training requirements of §§ 35.50 and 35.51, respectively.

(b) Physicians, dentists, or podiatrists identified as authorized users for the

medical, dental, or podiatric use of byproduct material on a Commission or Agreement State license issued before [date—6 months from publication of the Final Rule] who perform only those medical uses for which they were authorized on that date need not comply with the training requirements of subparts C through H.

§ 35.59 Recentness of training.

The training and experience specified in subparts B, D, E, F, G, H, and J must have been obtained within the 7 years preceding the date of application or the individual must have had related continuing education and experience since the required training and experience was completed.

Subpart C—General Technical Requirements

§ 35.60 Possession, use, calibration, and check of instruments to measure the activity of photon-emitting radionuclides.

(a) For other than unit dosages, a licensee shall possess and use instrumentation to measure the activity of photon-emitting radionuclides prior to administration to each patient or human research subject.

(b) If a licensee uses instrumentation to measure the activity of dosages of photon-emitting radionuclides, including unit dosages, it shall develop, implement, and maintain written procedures for proper operation of the instrumentation. At a minimum, a licensee shall—

(1) Perform tests, before initial use and following repair, on each instrument for accuracy, linearity, and geometry dependence;

(2) Perform an accuracy test annually;

(3) Perform a linearity test annually over the range of medical use; and

(4) Check each instrument for constancy and proper operation at the beginning of each day of use.

(c) Accuracy tests must be performed with source(s) with a principal photon energy of between 100 and 500 keV whose activity is traceable to the National Institute of Standards and Technology (NIST) or by a supplier who has compared the source to a source that was calibrated by NIST.

(d) A licensee shall mathematically correct dosage readings for any geometry or linearity error that exceeds 10 percent if the dosage is greater than 1.11 MBq (30 μCi) and shall repair or replace the instrumentation if the accuracy or constancy error exceeds 10 percent.

(e) A licensee shall retain a record of each check and test required by this section in accordance with § 35.2060.

§ 35.61 Calibration and check of survey instruments.

(a) A licensee shall calibrate the survey instruments used to show compliance with this part and 10 CFR part 20 before first use, annually, and following repair. A licensee shall—

(1) Calibrate all scales with readings up to 10 mSv (1000 mrem) per hour with a radiation source;

(2) Calibrate two separated readings on each scale that will be used to show compliance with this part; and

(3) Conspicuously note on the instrument the date of calibration.

(b) A licensee shall consider a point as calibrated if the indicated exposure rate differs from the calculated exposure rate by not more than 20 percent, and conspicuously attach a correction chart or graph to the instrument if the indicated exposure rate differs from the calculated exposure rate by more than 10 percent.

(c) Survey instruments must be removed from use if the indicated exposure rate differs from the calculated exposure rate by more than 20 percent.

(d) A licensee shall retain a record of each survey instrument calibration in accordance with § 35.2061.

§ 35.62 Possession, use, calibration, and check of instruments to measure dosages of alpha- or beta-emitting radionuclides.

(a) For other than unit dosages, a licensee shall possess and use instrumentation to measure the radioactivity of alpha- or beta-emitting radionuclides. A licensee shall measure, by direct measurement or by combination of measurements and calculations, the amount of radioactivity in dosages of alpha-or beta-emitting radionuclides prior to administration to each patient or human research subject.

(b) A licensee shall develop, implement, and maintain written procedures for use of the instrumentation. At a minimum, a licensee shall—

(1) Perform tests before initial use, and following repair, on each instrument for accuracy, linearity, and geometry dependence, unless it is not appropriate for the use of the instrument; and make adjustments when necessary;

(2) Perform accuracy annually;

(3) Perform linearity tests annually over the range of medical use; and

(4) Check each instrument for constancy and proper operation at the beginning of each day of use.

(c) Accuracy tests must be performed with source(s) that are traceable to NIST or by a supplier who has compared the source to a source that was calibrated by NIST.

(d) A licensee shall retain a record of each check and test required by this section in accordance with § 35.2060.

§ 35.63 Determination of dosages of unsealed byproduct material for medical use.

(a) A licensee shall determine and record the activity of each dosage prior to medical use.

(b) For a unit dosage of an alpha-, beta-, or photon-emitting radionuclide, this determination must be made either by direct measurement or by a decay correction, based on the measurement made by a manufacturer or preparer licensed pursuant to § 32.72 of this chapter or equivalent Agreement State requirements.

(c) For a dosage of a alpha-, beta-, or photon-emitting radionuclide prepared by the licensee, this determination must be made by direct measurement or by combination of measurements and calculations.

(d) A licensee shall not use a dosage if the dosage differs from the prescribed dosage by more than 20 percent.

(e) A licensee shall retain a record of the dosage determination required by this section in accordance with § 35.2063.

§ 35.65 Authorization for calibration and reference sources.

Any person authorized by § 35.11 for medical use of byproduct material may receive, possess, and use the following byproduct material for check, calibration, and reference use:

(a) Sealed sources manufactured and distributed by a person licensed pursuant to § 32.74 of this chapter or equivalent Agreement State regulations and that do not exceed 1.11 kBq (30 mCi) each;

(b) Any byproduct material with a half-life not longer than 120 days in individual amounts not to exceed 0.555 MBq (15 mCi);

(c) Any byproduct material with a half-life longer than 120 days in individual amounts not to exceed 7.4 MBq (200 λCi) each and not to exceed 1000 times the quantities in appendix B of Part 30 of this chapter whichever is more limiting; and

(d) Technetium-99m in amounts as needed.

§ 35.67 Requirements for possession of sealed sources and brachytherapy sources.

(a) A licensee in possession of any sealed source or brachytherapy source shall follow the radiation safety and handling instructions supplied by the manufacturer, and shall maintain the instructions for the duration of source use in a legible form convenient to users.

(b) A licensee in possession of a sealed source shall—

(1) Test the source for leakage before its first use unless the licensee has a certificate from the supplier indicating that the source was tested within 6 months before transfer to the licensee; and

(2) Test the source for leakage at intervals not to exceed 6 months or at other intervals approved by the Commission or an Agreement State in the Sealed Source and Device Registry.

(c) To satisfy the leak test requirements of this section, the licensee shall measure the sample so that the leakage test can detect the presence of 185 Bq (0.005 μCi) of radioactive material on the sample.

(d) A licensee shall retain leakage test records in accordance with § 35.2067.

(e) If the leakage test reveals the presence of 185 Bq (0.005 μCi) or more of removable contamination, the licensee shall—

(1) Immediately withdraw the sealed source from use and store, dispose, or cause it to be repaired in accordance with the requirements in parts 20 and 30 of this chapter; and

(2) File a report within 5 days of the leakage test in accordance with § 35.3067.

(f) A licensee need not perform a leakage test on the following sources:

(1) Sources containing only byproduct material with a half-life of less than 30 days;

(2) Sources containing only byproduct material as a gas;

(3) Sources containing 3.7 MBq (100 μCi) or less of beta or gamma-emitting material or 0.37 MBq (10 μCi) or less of alpha-emitting material;

(4) Sources stored for less than a 10-year period and not being used. The licensee shall, however, test each such source for leakage before any use or transfer unless it has been leakage-tested within 6 months before the date of use or transfer; and

(5) Seeds of iridium-192 encased in nylon ribbon.

(g) A licensee in possession of sealed sources or brachytherapy sources, except for gamma stereotactic radiosurgery sources, shall conduct a semi-annual physical inventory of all such sources in its possession. The licensee shall retain each inventory record in accordance with § 35.2067.

§ 35.69 Labeling and shielding of vials and syringes.

(a) A licensee shall develop, implement, and maintain written procedures for—

(1) Labeling each syringe, syringe shield, or vial shield that contains a radiopharmaceutical to identify the radiopharmaceutical name, or its abbreviation, and to ensure that the contents are conspicuously identified as containing radioactive material; and

(2) Shielding vials and syringes containing radiopharmaceuticals.

(b) A licensee shall instruct individuals, commensurate with the individual's assigned duties, in the procedures required by paragraph (a) of this section.

§ 35.70 Surveys for ambient radiation exposure rate.

(a) Except as provided in paragraph (b) of this section, a licensee shall survey with a radiation detection survey instrument at the end of each day of use all areas where radiopharmaceuticals requiring a written directive were prepared for use or administered.

(b) A licensee does not need to perform the surveys required by paragraph (a) of this section in an area(s) where patients or human research subjects can not be released pursuant to § 35.75.

(c) A licensee shall retain a record of each survey in accordance with § 35.2070.

§ 35.75 Release of individuals containing radiopharmaceuticals or implants.

(a) A licensee may authorize the release from its control of any individual who has been administered radiopharmaceuticals or implants containing radioactive material if the total effective dose equivalent to any other individual from exposure to the released individual is not likely to exceed 5 mSv (0.5 rem).[2]

(b) A licensee shall provide the released individual, or the individual's parent or guardian, with instructions, including written instructions, on actions recommended to maintain doses to other individuals as low as is reasonably achievable if the total effective dose equivalent to any other individual is likely to exceed 1 mSv (0.1 rem). If the total effective dose equivalent to a breast-feeding infant or child could exceed 1 mSv (0.1 rem) assuming there were no interruption of breast-feeding, the instructions shall also include—

(1) Guidance on the interruption or discontinuation of breast-feeding; and

(2) Information on the potential consequences, if any, of failure to follow the guidance.

(c) A licensee shall maintain a record of the basis for authorizing the release of an individual, in accordance with § 35.2075(a).

(d) The licensee shall maintain a record of instructions provided to breast-feeding women in accordance with § 35.2075(c).

§ 35.80 Provision of mobile service.

(a) A licensee providing mobile service shall—

(1) Obtain a letter signed by the management of each client for which services are rendered that permits the use of byproduct material at the client's address of use and clearly delineates the authority and responsibility of each entity;

(2) Check instruments as described in §§ 35.60 and 35.62 for proper function before medical use at each address of use or on each day of use, whichever is more frequent;

(3) Check survey instruments for proper operation with a dedicated check source before use at each address of use;

(4) Before leaving a client's address of use, survey all areas of use to ensure compliance with the requirements in part 20 of this chapter; and

(b) A mobile nuclear medicine service may not have byproduct material delivered from the manufacturer or the distributor to the client's address of use, unless the client has a license allowing possession of the byproduct material. Radioactive material delivered to the client's address of use must be received and handled in conformance with the client's license.

(c) A licensee providing mobile nuclear services shall retain the letter required in paragraph (a)(1) and the record of each survey required in paragraph (a)(4) of this section in accordance with § 35.2080.

§ 35.92 Decay-in-storage.

(a) A licensee may hold byproduct material with a physical half-life of less than 120 days for decay-in-storage before disposal in ordinary trash if it—

(1) Monitors byproduct material at the surface before disposal as ordinary trash and determines that its radioactivity cannot be distinguished from the background radiation level with an appropriate radiation detection survey meter set on its most sensitive scale and with no interposed shielding; and

(2) Removes or obliterates all radiation labels;

(b) A licensee shall retain a record of each disposal permitted under paragraph (a) of this section in accordance with § 35.2092.

[2] Regulatory Guide 8.39, ''Release of Patients Administered Radioactive Materials,'' describes methods for calculating doses to other individuals and contains tables of activities not likely to cause doses exceeding 0.5 rem (5 mSv).

Subpart D—Unsealed Byproduct Material—Low Dose

§ 35.100 Use of unsealed byproduct material for uptake, dilution, and excretion studies for which a written directive is not required.

A licensee may use for uptake, dilution, or excretion studies any unsealed byproduct material, except in quantities that require a written directive pursuant to § 35.40, prepared for medical use that is either—

(a) Obtained from a manufacturer or preparer licensed pursuant to § 32.72 of this chapter or equivalent Agreement State requirements; or

(b) Prepared by an authorized nuclear pharmacist, a physician who is an authorized user and who meets the requirements specified in § 35.292, or an individual under the supervision of either as specified in § 35.27.

§ 35.200 Use of unsealed byproduct material for imaging and localization studies for which a written directive is not required.

A licensee may use for imaging and localization studies any unsealed byproduct material, except in quantities that require a written directive pursuant to § 35.40, prepared for medical use that is either—

(a) Obtained from a manufacturer or preparer licensed pursuant to § 32.72 of this chapter or equivalent Agreement State requirements; or

(b) Prepared by an authorized nuclear pharmacist, a physician who is an authorized user and who meets the requirements specified in § 35.292, or an individual under the supervision of either as specified in § 35.27.

§ 35.204 Permissible molybdenum-99 concentration.

(a) A licensee may not administer to humans a radiopharmaceutical containing more than 5.55 kBq (0.15 μCi) of molybdenum-99 per millicurie of technetium-99m.

(b) A licensee that uses molybdenum-99/technetium-99m generators for preparing a technetium-99m radiopharmaceutical shall measure the molybdenum-99 concentration of the first eluate after receipt of a generator to demonstrate compliance with paragraph (a) of this section.

(c) A licensee that must measure molybdenum concentration shall retain a record of each measurement in accordance with § 35.2204.

§ 35.290 Training for uptake, dilution, and excretion studies.

Except as provided in §§ 35.57, the licensee shall require the authorized user of a radiopharmaceutical for uses authorized under § 35.100 to be a physician who—

(a) Is certified by a medical specialty board whose certification process includes all of the requirements in paragraph (b) of this section and whose certification has been approved by the Commission or—

(b)(1) Has completed a structured educational program in basic radionuclide handling techniques applicable to the use of diagnostic radiopharmaceuticals, consisting of both—

(i) 40 hours of didactic training in the following areas—

(A) Radiation physics and instrumentation;

(B) Radiation protection;

(C) Mathematics pertaining to the use and measurement of radioactivity;

(D) Chemistry of byproduct material for medical use; and

(E) Radiation biology; and

(ii) 20 hours of supervised practical experience under the supervision of an authorized user involving—

(A) Ordering, receiving, and unpacking radioactive materials safely and performing the related radiation surveys;

(B) Calibrating dose calibrators and diagnostic instruments and performing checks for proper operation of survey meters;

(C) Calculating, measuring, and safely preparing patient or human research subject dosages;

(D) Using administrative controls to prevent a medical event involving the use of byproduct material;

(E) Using procedures to contain spilled byproduct material safely and using proper decontamination procedures; and

(F) Administering dosages to patients or human research subjects; and

(2) Has obtained written certification, signed by a preceptor authorized user, that the requirements in paragraph (b)(1) of this section have been satisfactorily completed and that the individual has achieved a level of competency sufficient to independently function as an authorized user of a diagnostic radiopharmaceutical for the uses listed in § 35.100; and

(3) Following completion of the requirements in paragraph (b)(1) of this section, has demonstrated sufficient knowledge in radiation safety commensurate with the use requested by passing an examination given by an organization or entity approved by the Commission in accordance with appendix A of this part.

§ 35.292 Training for imaging and localization studies.

Except as provided in §§ 35.57, the licensee shall require the authorized user of radiopharmaceuticals and generators for the uses authorized under § 35.200 to be a physician who—

(a) Is certified by a medical specialty board whose certification process includes all of the requirements in paragraph (b) of this section and whose certification has been approved by the Commission; or

(b)(1) Has completed a structured educational program in basic radionuclide handling techniques applicable to the use of diagnostic radiopharmaceuticals and generators, consisting of both—

(i) 80 hours of didactic training in the following areas—

(A) Radiation physics and instrumentation;

(B) Radiation protection;

(C) Mathematics pertaining to the use and measurement of radioactivity;

(D) Chemistry of byproduct material for medical use; and

(E) Radiation biology; and

(ii) 40 hours of supervised practical experience under the supervision of an authorized user involving—

(A) Ordering, receiving, and unpacking radioactive materials safely and performing the related radiation surveys;

(B) Calibrating dose calibrators and diagnostic instruments and performing checks for proper operation of survey meters;

(C) Calculating, measuring, and safely preparing patient or human research subject dosages;

(D) Using administrative controls to prevent a medical event involving the use of byproduct material;

(E) Using procedures to contain spilled byproduct material safely and using proper decontamination procedures;

(F) Eluting technetium-99m from generator systems, measuring and testing the eluate for molybdenum-99, and processing the eluate with reagent kits to prepare technetium-99m labeled radiopharmaceuticals; and

(G) Administering dosages to patients or human research subjects; and

(2) Has obtained written certification, signed by a preceptor authorized user, that the requirements in paragraph (b)(1) of this section have been satisfactorily completed and that the individual has achieved a level of competency sufficient to independently function as an authorized user of diagnostic radiopharmaceuticals and generators for the uses listed in § 35.200; and

(3) Following completion of the requirements in paragraph (b)(1) of this

section, has demonstrated sufficient knowledge in radiation safety commensurate with the use requested by passing an examination given by an organization or entity approved by the Commission in accordance with appendix A of this part.

Subpart E—Unsealed Byproduct Material—High Dose

§ 35.300 Use of unsealed byproduct material for which a written directive is required.

A licensee may use any unsealed byproduct material prepared for medical use and for which a written directive is required that is either—

(a) Obtained from a manufacturer or preparer licensed pursuant to § 32.72 of this chapter or equivalent Agreement State requirements; or

(b) Prepared by an authorized nuclear pharmacist, a physician who is an authorized user and who meets the requirements specified in § 35.292, or an individual under the supervision of either as specified in § 35.27.

§ 35.310 Safety instruction.

In addition to the requirements of § 19.12 of this chapter,

(a) A licensee shall provide radiation safety instruction, initially and at least annually, to personnel caring for patients or human research subjects that have received radiopharmaceutical therapy and can not be released in accordance with § 35.75. To satisfy this requirement, the instruction must be commensurate with the duties of the personnel and include—

(1) Patient or human research subject control;

(2) Visitor control, including—

(i) Routine visitation to hospitalized individuals in accordance with § 20.1301(a)(1) of this chapter; and

(ii) Visitation authorized in accordance with § 20.1301(a)(3);

(3) Contamination control;

(4) Waste control; and

(5) Notification of the authorized user and the Radiation Safety Officer, or his designee, if the patient or the human research subject dies or has a medical emergency.

(b) A licensee shall retain a record of individuals receiving instruction in accordance with § 35.2310.

§ 35.315 Safety precautions.

(a) For each patient or human research subject that cannot be released in accordance with § 35.75, a licensee shall—

(1) Provide a private room with a private sanitary facility;

(2) Visibly post the patient's or the human research subject's room with a ''Radioactive Materials'' sign and note on the door or in the patient's or human research subject's chart where and how long visitors may stay in the patient's or the human research subject's room; and

(3) Either monitor material and items removed from the patient's or the human research subject's room to determine that their radioactivity cannot be distinguished from the natural background radiation level with a radiation detection survey instrument set on its most sensitive scale and with no interposed shielding, or handle such material and items as radioactive waste.

(b) A licensee shall notify the authorized user and the Radiation Safety Officer, or his or her designee, as soon as possible, if the patient or human research subject has a medical emergency and, immediately, if the patient dies.

§ 35.390 Training for use of unsealed byproduct material for therapy or for use of unsealed byproduct material that requires a written directive.

Except as provided in § 35.57, the licensee shall require the authorized user of a radiopharmaceutical for the uses authorized under § 35.300 to be a physician who—

(a) Is certified by a medical specialty board whose certification process includes all of the requirements in paragraph (b) of this section and whose certification has been approved by the Commission; or

(b)(1) Has completed a structured educational program in basic radionuclide handling techniques applicable to the use of unsealed byproduct material consisting of both—

(i) 80 hours of didactic training in the following areas—

(A) Radiation physics and instrumentation;

(B) Radiation protection;

(C) Mathematics pertaining to the use and measurement of radioactivity; and

(D) Radiation biology; and

(ii) 40 hours of supervised practical experience under the supervision of an authorized user at a medical institution involving—

(A) Ordering, receiving, and unpacking radioactive materials safely and performing the related radiation surveys;

(B) Calibrating dose calibrators, as appropriate, and performing checks for proper operation of survey meters;

(C) Calculating, measuring, and safely preparing patient or human research subject dosages;

(D) Using administrative controls to prevent a medical event involving the use of byproduct material;

(E) Using procedures to contain spilled byproduct material safely and using proper decontamination procedures; and

(2) Has had experience, obtained under the direct supervision of an authorized user, involving at least five cases for each procedure with radiation safety hazards similar to that use for which the individual is requesting authorized user status. This experience may be obtained concurrently with the supervised practical experience required by paragraph (b)(1)(ii) of this section;

(3) Has obtained written certification, signed by a preceptor authorized user, that the requirements in paragraphs (b) (1) and (2) of this section have been satisfactorily completed and that the individual has achieved a level of competency sufficient to independently function as an authorized user of unsealed byproduct material for the uses listed in § 35.300; and

(4) Following completion of the requirements in paragraph (b) (1) and (2) of this section, has demonstrated sufficient knowledge in radiation safety commensurate with the use requested by passing an examination given by an organization or entity approved by the Commission in accordance with appendix A of this part.

Subpart F— Manual Brachytherapy

§ 35.400 Use of sources for manual brachytherapy.

A licensee shall use only brachytherapy sources for therapeutic medical uses as approved in the Sealed Source and Device Registry.

§ 35.404 Radiation surveys of patients or human research subjects treated with implants.

(a) Immediately after implanting sources in a patient or a human research subject, the licensee shall make a radiation survey of the patient or the human research subject and the adjacent area of use to confirm that no sources have been misplaced.

(b) Immediately after removing the last temporary implant source from a patient or a human research subject, the licensee shall make a radiation survey of the patient or the human research subject with a radiation detection survey instrument to confirm that all sources have been removed.

(c) A licensee shall retain a record of patient or human research subject surveys in accordance with § 35.2404.

§ 35.406 Brachytherapy sources inventory.

(a) A licensee shall maintain accountability at all times for all brachytherapy sources in storage or use.

(b) Promptly after removing sources from a patient or a human research

subject, a licensee shall return brachytherapy sources to a secure storage area.

(c) A licensee shall maintain a record of the brachytherapy source accountability in accordance with § 35.2406.

§ 35.410 Safety instruction.

In addition to the requirements of § 19.12 of this chapter,

(a) The licensee shall provide radiation safety instruction, initially and at least annually, to personnel caring for patients or human research subjects that are undergoing implant therapy and cannot be released in accordance with § 35.75. To satisfy this requirement, the instruction must be commensurate with the duties of the personnel and include the —

(1) Size and appearance of the brachytherapy sources;

(2) Safe handling and shielding instructions;

(3) Patient or human research subject control;

(4) Visitor control, including both—

(i) Routine visitation of hospitalized individuals in accordance with § 20.1301(a)(1) of this chapter; and

(ii) Visitation authorized in accordance with § 20.1301(a)(3); and

(5) Notification of the authorized user and Radiation Safety Officer, or his or her designee, if the patient or the human research subject dies or has a medical emergency.

(b) A licensee shall retain a record of individuals receiving instruction in accordance with § 35.2310.

§ 35.415 Safety precautions.

(a) For each patient or human research subject receiving brachytherapy and confined pursuant to § 35.75, a licensee shall—

(1) Not quarter the patient or the human research subject in the same room as an individual who is not receiving radiation therapy; and

(2) Visibly post the patient's or human research subject's room with a ''Radioactive Materials'' sign and note on the door or in the patient's or human research subject's chart where and how long visitors may stay in the patient's or human research subject's room.

(b) A licensee shall have available, near each treatment room, emergency response equipment. The emergency response equipment must include, as applicable—

(1) A device to assist in placing the source(s) in the shielded position;

(2) A shielded source/applicator storage container;

(3) Remote handling tools; and

(4) Supplies necessary to surgically remove applicators or sources from a patient or human research subject treated internally with sealed sources.

(c) A licensee shall notify the authorized user and the Radiation Safety Officer, or his designee, as soon as possible, if the patient or human research subject has a medical emergency and, immediately, if the patient dies.

§ 35.432 Full calibration measurements of brachytherapy sources.

(a) A licensee authorized to use brachytherapy sources for medical use shall perform full calibration measurements on brachytherapy sources before the first medical use of the source or source/applicator configuration.

(b) A licensee may use calibration measurements provided by the source manufacturer that are made in accordance with the requirements of this section.

(c) To satisfy the requirements of paragraphs (a) and (b) of this section, full calibration measurements must include determination of—

(1) The output or activity within +/- 5 percent; and

(2) Source positioning accuracy within applicators.

(d) A licensee shall use the dosimetry system described in § 35.630(a) to measure the output or activity of the brachytherapy source.

(e) A licensee shall make full calibration measurements required by paragraph (a) of this section in accordance with published protocols by nationally recognized bodies.

(f) A licensee shall mathematically correct the outputs or activities determined in paragraph (c) of this section for physical decay at intervals consistent with 1 percent physical decay.

(g) A licensee shall retain a record of each calibration in accordance with § 35.2432.

§ 35.490 Training for use of manual brachytherapy sources.

Except as provided in § 35.57, the licensee shall require the authorized user of a manual brachytherapy source for the uses authorized under § 35.400 to be a physician who—

(a) Is certified by a medical specialty board whose certification process includes all of the requirements in paragraph (b) of this section and whose certification has been approved by the Commission; or

(b)(1) Has completed a structured educational program in basic radionuclide handling techniques applicable to the use of manual brachytherapy sources consisting of both—

(i) 200 hours of didactic training in the following areas —

(A) Radiation physics and instrumentation;

(B) Radiation protection;

(C) Mathematics pertaining to the use and measurement of radioactivity; and

(D) Radiation biology;

(ii) 500 hours of supervised practical experience, under the supervision of an authorized user at a medical institution, involving—

(A) Ordering, receiving, and unpacking radioactive materials safely and performing the related radiation surveys;

(B) Checking survey meters for proper operation;

(C) Preparing, implanting, and removing sealed sources;

(D) Maintaining running inventories of material on hand;

(E) Using administrative controls to prevent a medical event involving the use of byproduct material;

(F) Using emergency procedures to control byproduct material; and

(2) Three years of supervised clinical experience that includes one year in a formal training program approved by the Residency Review Committee for Radiology of the Accreditation Council for Graduate Medical Education or the Committee on Postdoctoral Training of the American Osteopathic Association or equivalent program approved by the NRC, and an additional two years of clinical experience under the supervision of an authorized user; and

(3) Has obtained written certification, signed by a preceptor authorized user, that the requirements in paragraphs (b)(1) and (2) of this section have been satisfactorily completed and that the individual has achieved a level of competency sufficient to independently function as an authorized user of manual brachytherapy sources for the uses listed in § 35.400; and, (4) Following completion of the requirements in paragraph (b)(1) and (2) of this section, has demonstrated sufficient knowledge in radiation safety commensurate with the use requested by passing an examination given by an organization or entity approved by the Commission in accordance with appendix A of this part.

Subpart G—Sealed Sources for Diagnosis

§ 35.500 Use of sealed sources for diagnosis.

A licensee shall use only sealed sources for diagnostic medical uses as approved in the Sealed Source and Device Registry.

§ 35.590 Training for use of sealed sources for diagnosis.

Except as provided in § 35.57, the licensee shall require the authorized user of a diagnostic sealed source for the use in a device authorized under § 35.500 to be a physician, dentist, or podiatrist who—

(a) Is certified by a speciality board whose certification process includes all of the requirements in paragraph (b) of this section and whose certification has been approved by the Commission; or

(b) Has had 8 hours of classroom and laboratory training in basic radionuclide handling techniques specifically applicable to the use of the device that includes—

(1) Radiation physics and instrumentation;

(2) Radiation protection;

(3) Mathematics pertaining to the use and measurement of radioactivity;

(4) Radiation biology; and

(5) Training in the use of the device for the uses requested.

Subpart H—Therapeutic Medical Devices

§ 35.600 Use of a sealed source in a device for therapeutic medical uses.

A licensee shall use sealed sources and devices for therapy as approved in the Sealed Source and Device Registry for medical use.

§ 35.604 Radiation surveys of patients and human research subjects treated with remote afterloaders.

(a) Before releasing a patient or a human research subject from licensee control, a licensee shall make a survey of the patient or the human research subject and the afterloader device with a portable radiation detection survey instrument to confirm that the source(s) has been removed from the patient or human research subject and returned to the safe shielded position.

(b) A licensee shall retain a record of patient or human research subject surveys in accordance with § 35.2404.

§ 35.605 Installation, maintenance, and repair.

(a) Only a person specifically licensed by the Commission or an Agreement State shall install, maintain, adjust, or repair a device that involves work on the source(s) shielding, the source(s) driving unit, or other electronic or mechanical component that could expose the source, reduce the shielding around the source(s), or compromise the radiation safety of the device or the source(s).

(b) Except for low dose-rate remote afterloader devices, only a person specifically licensed by the Commission or an Agreement State shall install, replace, relocate, or remove a sealed source or source contained in a device,

(c) For a low dose-rate remote afterloader device, only a person specifically licensed by the Commission or an Agreement State or an authorized medical physicist shall perform the functions listed in paragraph (b) of this section.

(d) A licensee shall retain a record of the installation, maintenance, and repair done on therapeutic medical devices in accordance with § 35.2605.

§ 35.610 Safety procedures and instructions for remote afterloaders, teletherapy units, and gamma stereotactic radiosurgery units.

(a) A licensee shall develop, implement, and maintain written procedures for—

(1) Securing the device, the console, the console keys, and the treatment room when not in use or unattended;

(2) Except for low dose-rate remote afterloaders, ensuring that only the patient or the human research subject is in the treatment room before initiating treatment with the source(s), unless contraindicated, or after a door interlock interruption;

(3) Preventing dual operation of more than one radiation producing device in a treatment room if applicable; and

(4) Responding to an abnormal situation when the operator is unable to place the source(s) in the shielded position, or remove the patient or human research subject from the radiation field with controls from outside the treatment room. This procedure must include—

(i) Instructions for responding to equipment failures and the names of the individuals responsible for implementing corrective actions;

(ii) The process for restricting access to and posting of the treatment area to minimize the risk of inadvertent exposure; and

(iii) The names and telephone numbers of the authorized users, the authorized medical physicist, and the Radiation Safety Officer to be contacted if the device or console operates abnormally.

(b) A copy of the procedures required by § 35.610(a) must be physically located at the unit console.

(c) A licensee shall post instructions at the device console to inform the operator of—

(1) The location of the procedures required by § 35.610(a); and

(2) The names and telephone numbers of the authorized users, the authorized medical physicist, and the Radiation Safety Officer to be contacted if the device or console unit or console operates abnormally.

(d) A licensee shall provide instruction and practice drills, initially and at least annually, in the procedures identified in paragraph (a) of this section and the operating procedures to all individuals who operate the device, as appropriate to the individual's assigned duties. A licensee shall ensure that operators receive refresher training in the operation of the unit and procedures for periodic spot-checks and full calibrations; and that operators, authorized medical physicists, and authorized users participate in drills of the emergency procedures.

(e) A licensee shall retain a record of individuals receiving instruction required by paragraph (d) of this section, in accordance with § 35.2310.

§ 35.615 Safety precautions for remote afterloaders, teletherapy units, and gamma stereotactic radiosurgery units.

(a) A licensee shall control access to the treatment room by a door at each entrance.

(b) A licensee shall equip each entrance to the treatment room with an electrical interlock system that will—

(1) Prevent the operator from initiating the treatment cycle unless each treatment room entrance door is closed;

(2) Cause the sources to be shielded immediately when an entrance door is opened; and

(3) Prevent the primary beam of radiation from being turned on following an interlock interruption until all treatment room entrance doors are closed and the beam on-off control is reset at the console.

(c) A licensee shall require any individual entering the treatment room to assure, through the use of appropriate radiation monitors, that radiation levels have returned to ambient levels.

(d) Except for low-dose remote afterloaders, a licensee shall construct or equip each treatment room with viewing and intercom systems to permit continuous observation of the patient or the human research subject from the treatment console during irradiation.

(e) For licensed activities where sources are placed within the patient's or human research subject's body, a licensee shall only conduct treatments which allow for expeditious removal of a decoupled or jammed source.

(f) In addition to the requirements specified in paragraphs (a) through (e) of this section, a licensee shall—

(1) For low dose-rate remote afterloader devices, require—

(i) An authorized user or an authorized medical physicist to be

physically present during the initiation of all patient treatments involving the device; and

(ii) An authorized medical physicist and an authorized user or a physician, who has been designated by the authorized user and who is a radiation oncology physician trained in emergency response for the device, to be immediately available during continuation of all patient treatments involving the device.

(2) For high dose-rate remote afterloader devices, require—

(i) An authorized user and an authorized medical physicist to be physically present during the initiation of all patient treatments involving the device; and

(ii) An authorized medical physicist and an authorized user or a physician, who has been designated by the authorized user and who is a radiation oncology physician that has been trained in emergency response for the device, to be physically present during continuation of all patient treatments involving the device.

(3) For pulsed dose-rate remote afterloader devices, require—

(i) An authorized user and an authorized medical physicist to be physically present during the initiation of all patient treatments involving the device; and

(ii) An authorized medical physicist and an authorized user or a physician, who has been designated by the authorized user and who is a radiation oncology physician that has been trained in emergency response for the device, to be immediately available during continuation of all patient treatments involving the device.

(4) For gamma stereotactic radiosurgery units, require an authorized user and an authorized medical physicist to be physically present throughout all patient treatments involving the unit.

(g) The licensee shall have emergency response equipment available near each treatment room. The emergency response equipment must include, as applicable—

(1) A device to assist in placing the source(s) in the shielded position;

(2) A shielded source/applicator storage container;

(3) Remote handling tools; and

(4) Supplies necessary to surgically remove applicators or sources from a patient or human research subject treated internally with sealed sources.

§ 35.630 Dosimetry equipment.

(a) A licensee shall have a calibrated dosimetry system available for use. To satisfy this requirement, one of the following two conditions must be met.

(1) The system must have been calibrated using a source traceable to the National Institute of Standards and Technology and published protocols approved by nationally recognized bodies or by a calibration laboratory accredited by the American Association of Physicists in Medicine (AAPM). The calibration must have been performed within the previous 2 years and after any servicing that may have affected system calibration; or

(2) The system must have been calibrated within the previous 4 years; 18 to 30 months after that calibration, the system must have been intercompared with another dosimetry system that was calibrated within the past 24 months by the National Institute of Standards and Technology or by a calibration laboratory accredited by the AAPM. The results of the intercomparison must have indicated that the calibration factor of the licensee's system had not changed by more than 2 percent. The licensee may not use the intercomparison result to change the calibration factor. When intercomparing dosimetry systems to be used for calibrating sealed sources for therapeutic devices, the licensee shall use a comparable device with beam attenuators or collimators, as applicable, and sources of the same radionuclide as the source used at the licensee's facility.

(b) The licensee shall have available for use a dosimetry system for spot-check measurements. To satisfy this requirement, the system may be compared with a system that has been calibrated in accordance with paragraph (a) of this section. This comparison must have been performed within the previous year and after each servicing that may have affected system calibration. The spot-check system may be the same system used to meet the requirement in paragraph (a) of this section.

(c) The licensee shall retain a record of each calibration, intercomparison, and comparison in accordance with § 35.2630.

§ 35.632 Full calibration measurements on teletherapy units.

(a) A licensee authorized to use a teletherapy unit for medical use shall perform full calibration measurements on each teletherapy unit—

(1) Before the first medical use of the unit; and

(2) Before medical use under the following conditions:

(i) Whenever spot-check measurements indicate that the output differs by more than 5 percent from the output obtained at the last full calibration corrected mathematically for radioactive decay;

(ii) Following replacement of the source or following reinstallation of the teletherapy unit in a new location;

(iii) Following any repair of the teletherapy unit that includes removal of the source or major repair of the components associated with the source exposure assembly; and

(3) At intervals not exceeding 1 year.

(b) To satisfy the requirement of paragraph (a) of this section, full calibration measurements must include determination of—

(1) The output within +/-3 percent for the range of field sizes and for the distance or range of distances used for medical use;

(2) The coincidence of the radiation field and the field indicated by the light beam localizing device;

(3) The uniformity of the radiation field and its dependence on the orientation of the useful beam;

(4) Timer accuracy and linearity over the range of use;

(5) On-off error; and

(6) The accuracy of all distance measuring and localization devices in medical use.

(c) A licensee shall use the dosimetry system described in § 35.630(a) to measure the output for one set of exposure conditions. The remaining radiation measurements required in paragraph (b)(1) of this section may be made using a dosimetry system that indicates relative dose rates.

(d) A licensee shall make full calibration measurements required by paragraph (a) of this section in accordance with published protocols approved by nationally recognized bodies.

(e) A licensee shall mathematically correct the outputs determined in paragraph (b)(1) of this section for physical decay for intervals not exceeding 1 month for cobalt-60, 6 months for cesium-137, or at intervals consistent with 1 percent decay for all other nuclides.

(f) Full calibration measurements required by paragraph (a) of this section and physical decay corrections required by paragraph (e) of this section must be performed by the authorized medical physicist.

(g) A licensee shall retain a record of each calibration in accordance with § 35.2632.

§ 35.633 Full calibration measurements on remote afterloaders.

(a) A licensee authorized to use a remote afterloader for medical use shall perform full calibration measurements on each unit—

(1) Before the first medical use of the unit;

(2) Before medical use under the following conditions:

(i) Whenever spot-check measurements indicate that the output differs by more than 5 percent from the output obtained at the last full calibration corrected mathematically for radioactive decay;

(ii) Following replacement of the source or following reinstallation of the unit in a new location outside the facility; and

(iii) Following any repair of the unit that includes removal of the source or major repair of the components associated with the source exposure assembly; and

(3) At intervals not exceeding 120 days for high dose-rate and pulsed dose-rate remote afterloaders; and

(4) At intervals not exceeding 1 year for low dose-rate remote afterloaders.

(b) To satisfy the requirement of paragraph (a) of this section, full calibration measurements must include determination of:

(1) The output within +/−5 percent;

(2) Source positioning accuracy to within +/-1 millimeter;

(3) Source retraction with backup battery upon power failure; and

(4) The operability of the electrically assisted treatment room doors with the high-dose rate remote afterloader unit electrical power turned off.

(c) In addition to the requirements for full calibrations for all remote afterloaders in paragraph (b) of this section, a licensee shall:

(1) For high dose-rate and pulsed dose-rate remote afterloaders, calibrate—

(i) At intervals not exceeding one quarter:

(A) The source guide tubes;

(B) Timer accuracy and linearity over the typical range of use; and

(C) Length of the connectors; and

(ii) Annually, the function of the source tube guides and connectors.

(2) For low dose-rate remote afterloaders, perform an autoradiograph of the source(s) to verify inventory and source(s) arrangement and a spot check of the absolute timer accuracy at intervals not exceeding one quarter.

(d) A licensee shall use the dosimetry system described in § 35.630(a) to measure the output.

(e) A licensee shall make full calibration measurements required by paragraph (a) of this section in accordance with published protocols approved by nationally recognized bodies.

(f) A licensee shall mathematically correct the outputs determined in paragraph (b)(1) of this section for physical decay at intervals consistent with 1 percent physical decay.

(g) Full calibration measurements required by paragraph (a) of this section and physical decay corrections required by paragraph (f) of this section must be performed by the authorized medical physicist.

(h) A licensee shall retain a record of each calibration in accordance with § 35.2633.

§ 35.635 Full calibration measurements on gamma stereotactic radiosurgery units.

(a) A licensee authorized to use a gamma stereotactic radiosurgery unit for medical use shall perform full calibration measurements on each unit—

(1) Before the first medical use of the unit;

(2) Before medical use under the following conditions—

(i) Whenever spot-check measurements indicate that the output differs by more than 5 percent from the output obtained at the last full calibration corrected mathematically for radioactive decay;

(ii) Following replacement of the sources or following reinstallation of the gamma stereotactic radiosurgery unit in a new location; and

(iii) Following any repair of the gamma stereotactic radiosurgery unit that includes removal of the sources or major repair of the components associated with the source assembly; and

(3) At intervals not exceeding 1 year.

(b) To satisfy the requirement of paragraph (a) of this section, full calibration measurements must include determination of—

(1) The output within +/−3 percent;

(2) Relative helmet factors;

(3) Isocenter coincidence;

(4) Timer accuracy and linearity over the range of use;

(5) On-off error; and

(6) Trunnion centricity.

(c) A licensee shall use the dosimetry system described in § 35.630(a) to measure the output for one set of exposure conditions. The remaining radiation measurements required in paragraph (b)(1) of this section may be made using a dosimetry system that indicates relative dose rates.

(d) A licensee shall make full calibration measurements required by paragraph (a) of this section in accordance with published protocols approved by nationally recognized bodies.

(e) A licensee shall mathematically correct the outputs determined in paragraph (b)(1) of this section at intervals not exceeding 1 month for cobalt-60 and at intervals consistent with 1 percent physical decay for all other radionuclides.

(f) Full calibration measurements required by paragraph (a) of this section and physical decay corrections required by paragraph (e) of this section must be performed by the authorized medical physicist.

(g) A licensee shall retain a record of each calibration in accordance with § 35.2635.

§ 35.642 Periodic spot-checks for teletherapy units.

(a) A licensee authorized to use teletherapy units for medical use shall perform output spot-checks on each teletherapy unit once in each calendar month that include determination of—

(1) Timer constancy, and timer linearity over the range of use;

(2) On-off error;

(3) The coincidence of the radiation field and the field indicated by the light beam localizing device;

(4) The accuracy of all distance measuring and localization devices used for medical use;

(5) The output for one typical set of operating conditions measured with the dosimetry system described in § 35.630(b); and

(6) The difference between the measurement made in paragraph (b)(5) of this section and the anticipated output, expressed as a percentage of the anticipated output (i.e., the value obtained at last full calibration corrected mathematically for physical decay).

(b) A licensee shall perform measurements required by paragraph (a) of this section in accordance with written procedures established by the authorized medical physicist. That individual need not actually perform the spot check measurements.

(c) A licensee shall have the authorized medical physicist review the results of each spot-check within 15 days. The authorized medical physicist shall promptly notify the licensee in writing of the results of each spot-check.

(d) A licensee authorized to use a teletherapy unit for medical use shall perform safety spot-checks of each teletherapy facility once in each calendar month and after each source installation to assure proper operation of—

(1) Electrical interlocks at each teletherapy room entrance;

(2) Electrical or mechanical stops installed for the purpose of limiting use of the primary beam of radiation (restriction of source housing angulation or elevation, carriage or stand travel and operation of the beam on-off mechanism);

(3) Source exposure indicator lights on the teletherapy unit, on the control console, and in the facility;

(4) Viewing and intercom systems;

(5) Treatment room doors from inside and outside the treatment room; and

(6) Electrically assisted treatment room doors with the teletherapy unit electrical power turned off.

(e) If the results of the checks required in paragraph (d) of this section indicate the malfunction of any system, a licensee shall lock the control console in the off position and not use the unit except as may be necessary to repair, replace, or check the malfunctioning system.

(f) A licensee shall retain a record of each spot-check required by paragraphs (a) and (d), in accordance with § 35.2642

§ 35.643 Periodic spot-checks for high dose-rate and pulsed dose-rate remote afterloaders.

(a) A licensee authorized to use high dose-rate or pulsed dose-rate remote afterloaders for medical use shall perform spot-checks on each unit:

(1) At the beginning of each week of use;

(2) At the beginning of each day of use; and

(3) After each source installation.

(b) The licensee shall have the authorized medical physicist:

(1) Establish written procedures for performing the spot-checks required in paragraph (a) of this section; and

(2) Review the results of each spot-check required by paragraph (a)(1) of this section within 15 days of the check. The authorized medical physicist need not actually perform the spot-check measurements.

(c) To satisfy the requirements of paragraphs (a)(1) of this section, spot-checks must, at a minimum—

(1) Verify source positioning accuracy;

(2) Determine output with the dosimetry system described in § 35.630(b); and

(3) Calculate the difference between the measurement made in paragraph (c)(2) of this section and the anticipated output, expressed as a percentage of the anticipated output (i.e., the value obtained at last full calibration mathematically corrected for physical decay).

(d) To satisfy the requirements of paragraphs (a)(2) and (a)(3) of this section, spot-checks must, at a minimum, assure proper operation of—

(1) Electrical interlocks at each remote afterloader room entrance;

(2) Source exposure indicator lights on the remote afterloader unit, on the control console, and in the facility;

(3) Viewing and intercom systems;

(4) Emergency response equipment;

(5) Radiation monitors used to indicate the source position;

(6) Timer constancy; and

(7) Clock (date and time) in the unit's computer.

(e) In addition to the requirements for spot checks in paragraph (d) of this section, a licensee shall ensure overall proper operation of the unit by conducting a simulated cycle of treatment as part of the spot-checks.

(f) A licensee shall arrange for prompt repair of any system identified in paragraph (c) of this section that is not operating.

(g) If the results of the checks required in paragraph (d) of this section indicate the malfunction of any system, a licensee shall lock the control console in the off position and not use the unit except as may be necessary to repair, replace, or check the malfunctioning system.

(h) A licensee shall retain a record of each check required by paragraphs (c) and (d) of this section in accordance with § 35.2643.

§ 35.644 Periodic spot-checks for low dose-rate remote afterloaders.

(a) A licensee authorized to use low dose-rate remote afterloaders for medical use shall perform spot-checks on each unit prior to each patient treatment and after each source installation that include proper operation of—

(1) Electrical interlocks at each remote afterloader room entrance;

(2) Source exposure indicator lights on the remote afterloader unit, on the control console, and in the facility;

(3) Emergency response equipment;

(4) Radiation monitors used to indicate the source position;

(5) Timer constancy; and

(6) Clock (date and time) in the unit's computer.

(b) In addition to the requirements for spot checks in paragraph (a) of this section, a licensee shall ensure overall proper operation of the unit by conducting a simulated cycle of treatment as part of the spot-checks.

(c) The licensee shall have the authorized medical physicist—

(1) Establish written procedures for performing the spot-checks required in paragraph (a) of this section; and

(2) Review the results of each spot-check required by paragraph (a) of this section within 15 days of the check. The authorized medical physicist need not actually perform the spot-check measurements.

(d) If the results of the checks required in paragraph (a) of this section indicate the malfunction of any system, a licensee shall lock the control console in the off position and not use the unit except as may be necessary to repair, replace, or check the malfunctioning system.

(e) A licensee shall retain a record of each check required by paragraph (a) of this section in accordance with § 35.2643.

§ 35.645 Periodic spot-checks for gamma stereotactic radiosurgery units.

(a) A licensee authorized to use gamma stereotactic radiosurgery units for medical use shall perform spot-checks on each unit—

(1) Monthly,

(2) At the beginning of each day of use, and

(3) After each source installation.

(b) The licensee shall have the authorized medical physicist—

(1) Establish written procedures for performing the spot-checks required in paragraph (a) of this section; and

(2) Review the results of each spot-check required by paragraph (a)(1) of this section within 15 days of the check. The authorized medical physicist need not actually perform the spot-check measurements.

(c) To satisfy the requirements of paragraph (a)(1) of this section, spot-checks must, at a minimum—

(1) Assure proper operation of—

(i) Treatment table retraction mechanism, using backup battery power or hydraulic/electrical backups with the unit off;

(ii) Helmet microswitchs;

(iii) Emergency timing circuits;

(iv) Emergency off buttons; and

(v) Stereotactic frames and localizing devices (trunnions).

(2) Determine—

(i) The output for one typical set of operating conditions measured with the dosimetry system described in § 35.630(b);

(ii) The difference between the measurement made in paragraph (c)(2)(i) of this section and the anticipated output, expressed as a percentage of the anticipated output (i.e., the value obtained at last full calibration corrected mathematically for physical decay);

(iii) Source output against computer calculation;

(iv) Timer accuracy and linearity over the range of use;

(v) On-off error; and

(vi) Trunnion centricity.

(d) To satisfy the requirements of paragraphs (a)(2) and (a)(3) of this section, spot-checks must assure proper operation of—

(1) Electrical interlocks at each gamma stereotactic radiosurgery room entrance;

(2) Source exposure indicator lights on the gamma stereotactic radiosurgery unit, on the control console, and in the facility;

(3) Viewing and intercom systems;

(4) Timer termination;

(5) Radiation monitors used to indicate room exposures; and

(6) Hydraulic cutoff mechanism (if applicable).

(e) A licensee shall arrange for prompt repair of any system identified in paragraph (c) of this section that is not operating properly.

(f) If the results of the checks required in paragraph (d) of this section indicate the malfunction of any system, a licensee shall lock the control console in the off position and not use the unit except as may be necessary to repair, replace, or check the malfunctioning system.

(g) A licensee shall retain a record of each check required by paragraphs (c) and (d) of this section in accordance with § 35.2645.

§ 35.647 Additional technical requirements for mobile remote afterloaders.

(a) A licensee providing mobile remote afterloader service shall—

(1) Check survey instruments before medical use at each address of use or on each day of use, which ever is more frequent; and

(2) Account for all sources before departure from a client's address of use.

(b) In addition to the periodic spot-checks required by § 35.643, a licensee authorized to use mobile afterloaders for medical use shall perform checks on each remote afterloader before each address of use. At a minimum, checks must be made to verify the operation of—

(1) Electrical interlocks on treatment area access points;

(2) Source exposure indicator lights on the remote afterloader, on the control console, and in the facility;

(3) Viewing and intercom systems;

(4) Applicators and connectors;

(5) Radiation monitors used to indicate room exposures;

(6) Source positioning (accuracy); and

(7) Radiation monitors used to indicate whether the source has returned to a safe shielded position.

(c) In addition to the requirements for checks in paragraph (b) of this section, a licensee shall ensure overall proper operation of the remote afterloader unit by conducting a simulated cycle of treatment before use at each address of use.

(d) A licensee shall arrange for prompt repair of any system identified in paragraph (b) of this section that is not operating properly.

(e) A licensee shall retain a record of each check required by paragraph (b) of this section in accordance with § 35.2647.

§ 35.652 Radiation surveys.

(a) In addition to the survey requirement in § 20.1501 of this chapter, a licensee shall make such surveys as defined in the Sealed Source and Device Registry to assure that the maximum radiation levels and average radiation levels from the surface of the main source safe with the source(s) in the shielded position does not exceed the levels stated in the Registry.

(b) The licensee shall make the survey required by paragraph (a) of this section at installation of a new source and following repairs to the source(s) shielding, the source(s) driving unit, or other electronic or mechanical component that could expose the source, reduce the shielding around the source(s), or compromise the radiation safety of the device or the source(s).

(c) A licensee shall retain a record of the radiation surveys required by paragraph (a) of this section in accordance with § 35.2652.

§ 35.655 Five-year inspection for teletherapy and gamma stereotactic radiosurgery units.

(a) A licensee shall have each teletherapy unit and gamma stereotactic radiosurgery unit fully inspected and serviced during source replacement or at intervals not to exceed 5 years, whichever comes first, to assure proper functioning of the source exposure mechanism.

(b) This inspection and servicing may only be performed by persons specifically licensed to do so by the Commission or an Agreement State.

(c) A licensee shall keep a record of the inspection and servicing in accordance with § 35.2655.

§ 35.657 Therapy-related computer systems.

The licensee shall:

(a) Verify that the computerized operating system and treatment planning system associated with the therapy device are operating appropriately; and

(b) Perform acceptance testing on the treatment planning system in accordance with published protocols approved by nationally recognized bodies.

§ 35.690 Training for use of therapeutic medical devices.

Except as provided in § 35.57, the licensee shall require the authorized user of a sealed source for a use authorized under § 35.600 to be a physician who—

(a) Is certified by a specialty board whose certification process includes all of the requirements in paragraph (b) of this section and whose certification has been approved by the Commission; or

(b)(1) Has completed a structured educational program in basic radionuclide techniques applicable to the use of a sealed source in a therapeutic medical device consisting of both—

(i) 200 hours of didactic training in the following areas—

(A) Radiation physics and instrumentation;

(B) Radiation protection;

(C) Mathematics pertaining to the use and measurement of radioactivity; and

(D) Radiation biology; and

(ii) 500 hours of supervised practical experience, under the supervision of an authorized user at a medical institution, involving—

(A) Review of the full calibration measurements and periodic spot checks;

(B) Preparing treatment plans and calculating treatment doses and times;

(C) Using administrative controls to prevent a medical event involving the use of byproduct material;

(D) Implementing emergency procedures to be followed in the event of the abnormal operation of the medical device or console;

(E) Checking and using survey meters; and

(F) Selecting the proper dose and how it is to be administered; and

(2) Three years of supervised clinical experience that includes one year in a formal training program approved by the Residency Review Committee for Radiology of the Accreditation Council for Graduate Medical Education or the Committee on Postdoctoral Training of the American Osteopathic Association or equivalent program approved by the NRC and an additional two years of clinical experience under the supervision of an authorized user; and

(3) Has obtained written certification, signed by a preceptor authorized user, that the required training in paragraphs (b)(1) and (b)(2) of this section has been satisfactorily completed and that the individual has achieved a level of competency sufficient to independently function as an authorized user of the therapeutic medical device for which the individual is requesting authorized user status; and

(4) Following completion of the requirements in paragraph (b)(1) and (2) of this section, has demonstrated sufficient knowledge in radiation safety commensurate with the use requested

by passing an examination given by an organization or entity approved by the Commission in accordance with appendix A of this part.

Subpart I—Reserved

Subpart J—Training and Experience Requirements

§ 35.900 Radiation Safety Officer.

Except as provided in § 35.57, the licensee shall require an individual fulfilling the responsibilities of the Radiation Safety Officer as provided in § 35.24 to be an individual who—

(a) Is certified by the—

(1) American Board of Health Physics in Comprehensive Health Physics;

(2) American Board of Radiology;

(3) American Board of Nuclear Medicine;

(4) American Board of Science in Nuclear Medicine;

(5) Board of Pharmaceutical Specialties in Nuclear Pharmacy;

(6) American Board of Medical Physics in radiation oncology physics;

(7) Royal College of Physicians and Surgeons of Canada in nuclear medicine;

(8) American Osteopathic Board of Radiology; or

(9) American Osteopathic Board of Nuclear Medicine; or

(b) Has had classroom and laboratory training and experience as follows—

(1) 200 hours of classroom and laboratory training that includes—

(i) Radiation physics and instrumentation;

(ii) Radiation protection;

(iii) Mathematics pertaining to the use and measurement of radioactivity;

(iv) Radiation biology; and

(v) Radiopharmaceutical chemistry; and

(2) One year of full time experience as a radiation safety technologist at a medical institution under the supervision of the individual identified as the Radiation Safety Officer on a Commission or Agreement State license that authorizes the medical use of byproduct material; or

(c) Is an authorized user identified on the licensee's license.

§ 35.910 Training for uptake, dilution, and excretion studies.

Except as provided in § 35.57, the licensee shall require the authorized user of a radiopharmaceutical in § 35.100(a) to be a physician who—

(a) Is certified in—

(1) Nuclear medicine by the American Board of Nuclear Medicine;

(2) Diagnostic radiology by the American Board of Radiology;

(3) Diagnostic radiology or radiology by the American Osteopathic Board of Radiology;

(4) Nuclear medicine by the Royal College of Physicians and Surgeons of Canada; or

(5) American Osteopathic Board of Nuclear Medicine in nuclear medicine; or

(b) Has had classroom and laboratory training in basic radioisotope handling techniques applicable to the use of prepared radiopharmaceuticals, and supervised clinical experience as follows—

(1) 40 hours of classroom and laboratory training that includes—

(i) Radiation physics and instrumentation;

(ii) Radiation protection;

(iii) Mathematics pertaining to the use and measurement of radioactivity;

(iv) Radiation biology; and

(v) Radiopharmaceutical chemistry; and

(2) 20 hours of supervised clinical experience under the supervision of an authorized user and that includes—

(i) Examining patients or human research subjects and reviewing their case histories to determine their suitability for radioisotope diagnosis, limitations, or contraindications;

(ii) Selecting the suitable radiopharmaceuticals and calculating and measuring the dosages;

(iii) Administering dosages to patients or human research subjects and using syringe radiation shields;

(iv) Collaborating with the authorized user in the interpretation of radioisotope test results; and

(v) Patient or human research subject follow up; or

(c) Has successfully completed a 6-month training program in nuclear medicine as part of a training program that has been approved by the Accreditation Council for Graduate Medical Education and that included classroom and laboratory training, work experience, and supervised clinical experience in all the topics identified in paragraph (b) of this section.

§ 35.920 Training for imaging and localization studies.

Except as provided in § 35.57, the licensee shall require the authorized user of a radiopharmaceutical, generator, or reagent kit in § 35.200(a) to be a physician who—

(a) Is certified in—

(1) Nuclear medicine by the American Board of Nuclear Medicine;

(2) Diagnostic radiology by the American Board of Radiology;

(3) Diagnostic radiology or radiology by the American Osteopathic Board of Radiology;

(4) Nuclear medicine by the Royal College of Physicians and Surgeons of Canada; or

(5) American Osteopathic Board of Nuclear Medicine in nuclear medicine; or

(b) Has had classroom and laboratory training in basic radioisotope handling techniques applicable to the use of prepared radiopharmaceuticals, generators, and reagent kits, supervised work experience, and supervised clinical experience as follows—

(1) 200 hours of classroom and laboratory training that includes—

(i) Radiation physics and instrumentation;

(ii) Radiation protection;

(iii) Mathematics pertaining to the use and measurement of radioactivity;

(iv) Radiopharmaceutical chemistry; and

(v) Radiation biology; and

(2) 500 hours of supervised work experience under the supervision of an authorized user that includes—

(i) Ordering, receiving, and unpacking radioactive materials safely and performing the related radiation surveys;

(ii) Calibrating dose calibrators and diagnostic instruments and performing checks for proper operation of survey meters;

(iii) Calculating and safely preparing patient or human research subject dosages;

(iv) Using administrative controls to prevent the medical event of byproduct material;

(v) Using procedures to contain spilled byproduct material safely and using proper decontamination procedures; and

(vi) Eluting technetium-99m from generator systems, measuring and testing the eluate for molybdenum-99 and alumina contamination, and processing the eluate with reagent kits to prepare technetium-99m labeled radiopharmaceuticals; and

(3) 500 hours of supervised clinical experience under the supervision of an authorized user that includes—

(i) Examining patients or human research subjects and reviewing their case histories to determine their suitability for radioisotope diagnosis, limitations, or contraindications;

(ii) Selecting the suitable radiopharmaceuticals and calculating and measuring the dosages;

(iii) Administering dosages to patients or human research subjects and using syringe radiation shields;

(iv) Collaborating with the authorized user in the interpretation of radioisotope test results; and

(v) Patient or human research subject follow up; or

(c) Has successfully completed a 6-month training program in nuclear medicine that has been approved by the Accreditation Council for Graduate Medical Education and that included classroom and laboratory training, work experience, and supervised clinical experience in all the topics identified in paragraph (b) of this section.

§ 35.930 Training for therapeutic use of unsealed byproduct material.

Except as provided in § 35.57, the licensee shall require the authorized user of radiopharmaceuticals in § 35.300 to be a physician who—

(a) Is certified by—

(1) The American Board of Nuclear Medicine;

(2) The American Board of Radiology in radiology, therapeutic radiology, or radiation oncology;

(3) The Royal College of Physicians and Surgeons of Canada in nuclear medicine; or

(4) The American Osteopathic Board of Radiology after 1984; or

(b) Has had classroom and laboratory training in basic radioisotope handling techniques applicable to the use of therapeutic radiopharmaceuticals, and supervised clinical experience as follows—

(1) 80 hours of classroom and laboratory training that includes—

(i) Radiation physics and instrumentation;

(ii) Radiation protection;

(iii) Mathematics pertaining to the use and measurement of radioactivity; and

(iv) Radiation biology; and

(2) Supervised clinical experience under the supervision of an authorized user at a medical institution that includes—

(i) Use of iodine-131 for diagnosis of thyroid function and the treatment of hyperthyroidism or cardiac dysfunction in 10 individuals; and

(ii) Use of iodine-131 for treatment of thyroid carcinoma in 3 individuals.

§ 35.932 Training for treatment of hyperthyroidism.

Except as provided in § 35.57, the licensee shall require the authorized user of only iodine-131 for the treatment of hyperthyroidism to be a physician with special experience in thyroid disease who has had classroom and laboratory training in basic radioisotope handling techniques applicable to the use of iodine-131 for treating hyperthyroidism, and supervised clinical experience as follows—

(a) 80 hours of classroom and laboratory training that includes—

(1) Radiation physics and instrumentation;

(2) Radiation protection,

(3) Mathematics pertaining to the use and measurement of radioactivity; and

(4) Radiation biology; and

(b) Supervised clinical experience under the supervision of an authorized user that includes the use of iodine-131 for diagnosis of thyroid function, and the treatment of hyperthyroidism in 10 individuals.

§ 35.934 Training for treatment of thyroid carcinoma.

Except as provided in § 35.57, the licensee shall require the authorized user of only iodine-131 for the treatment of thyroid carcinoma to be a physician with special experience in thyroid disease who has had classroom and laboratory training in basic radioisotope handling techniques applicable to the use of iodine-131 for treating thyroid carcinoma, and supervised clinical experience as follows—

(a) 80 hours of classroom and laboratory training that includes—

(1) Radiation physics and instrumentation;

(2) Radiation protection;

(3) Mathematics pertaining to the use and measurement of radioactivity; and

(4) Radiation biology; and

(b) Supervised clinical experience under the supervision of an authorized user that includes the use of iodine-131 for the treatment of thyroid carcinoma in 3 individuals.

§ 35.940 Training for use of brachytherapy sources.

Except as provided in § 35.57, the licensee shall require the authorized user of a brachytherapy source listed in § 35.400 for therapy to be a physician who—

(a) Is certified in—

(1) Radiology, therapeutic radiology, or radiation oncology by the American Board of Radiology;

(2) Radiation oncology by the American Osteopathic Board of Radiology;

(3) Radiology, with specialization in radiotherapy, as a British ''Fellow of the Faculty of Radiology'' or ''Fellow of the Royal College of Radiology''; or

(4) Therapeutic radiology by the Canadian Royal College of Physicians and Surgeons; or

(b) Is in the active practice of therapeutic radiology, has had classroom and laboratory training in radioisotope handling techniques applicable to the therapeutic use of brachytherapy sources, supervised work experience, and supervised clinical experience as follows—

(1) 200 hours of classroom and laboratory training that includes—

(i) Radiation physics and instrumentation;

(ii) Radiation protection;

(iii) Mathematics pertaining to the use and measurement of radioactivity; and

(iv) Radiation biology;

(2) 500 hours of supervised work experience under the supervision of an authorized user at a medical institution that includes—

(i) Ordering, receiving, and unpacking radioactive materials safely and performing the related radiation surveys;

(ii) Checking survey meters for proper operation;

(iii) Preparing, implanting, and removing sealed sources;

(iv) Maintaining running inventories of material on hand;

(v) Using administrative controls to prevent a medical event involving byproduct material; and

(vi) Using emergency procedures to control byproduct material; and

(3) Three years of supervised clinical experience that includes one year in a formal training program approved by the Residency Review Committee for Radiology of the Accreditation Council for Graduate Medical Education or the Committee on Postdoctoral Training of the American Osteopathic Association, and an additional two years of clinical experience in therapeutic radiology under the supervision of an authorized user at a medical institution that includes—

(i) Examining individuals and reviewing their case histories to determine their suitability for brachytherapy treatment, and any limitations or contraindications;

(ii) Selecting the proper brachytherapy sources and dose and method of administration;

(iii) Calculating the dose; and

(iv) Post-administration follow up and review of case histories in collaboration with the authorized user.

§ 35.941 Training for ophthalmic use of strontium-90.

Except as provided in § 35.57, the licensee shall require the authorized user of only strontium-90 for ophthalmic radiotherapy to be a physician who is in the active practice of therapeutic radiology or ophthalmology, and has had classroom and laboratory training in basic radioisotope handling techniques applicable to the use of strontium-90 for ophthalmic radiotherapy, and a period of supervised clinical training in ophthalmic radiotherapy as follows—

(a) 24 hours of classroom and laboratory training that includes—

(1) Radiation physics and instrumentation;

(2) Radiation protection;

(3) Mathematics pertaining to the use and measurement of radioactivity; and

(4) Radiation biology;

(b) Supervised clinical training in ophthalmic radiotherapy under the supervision of an authorized user at a medical institution that includes the use of strontium-90 for the ophthalmic treatment of five individuals that includes—

(1) Examination of each individual to be treated;

(2) Calculation of the dose to be administered;

(3) Administration of the dose; and

(4) Follow up and review of each individual's case history.

§ 35.950 Training for use of sealed sources for diagnosis.

Except as provided in § 35.57, the licensee shall require the authorized user of a sealed source in a device listed in § 35.500 to be a physician, dentist, or podiatrist who—

(a) Is certified in—

(1) Radiology, diagnostic radiology, therapeutic radiology, or radiation oncology by the American Board of Radiology;

(2) Nuclear medicine by the American Board of Nuclear Medicine;

(3) Diagnostic radiology or radiology by the American Osteopathic Board of Radiology; or

(4) Nuclear medicine by the Royal College of Physicians and Surgeons of Canada; or

(b) Has had 8 hours of classroom and laboratory training in basic radioisotope handling techniques specifically applicable to the use of the device that includes—

(1) Radiation physics, mathematics pertaining to the use and measurement of radioactivity, and instrumentation;

(2) Radiation biology;

(3) Radiation protection; and

(4) Training in the use of the device for the uses requested.

§ 35.960 Training for use of therapeutic medical devices.

Except as provided in § 35.57, the licensee shall require the authorized user of a sealed source listed in § 35.600 to be a physician who—

(a) Is certified in—

(1) Radiology, therapeutic radiology, or radiation oncology by the American Board of Radiology;

(2) Radiation oncology by the American Osteopathic Board of Radiology;

(3) Radiology, with specialization in radiotherapy, as a British ''Fellow of the Faculty of Radiology'' or ''Fellow of the Royal College of Radiology''; or

(4) Therapeutic radiology by the Canadian Royal College of Physicians and Surgeons; or

(b) Is in the active practice of therapeutic radiology, and has had classroom and laboratory training in basic radioisotope techniques applicable to the use of a sealed source in a therapeutic medical device, supervised work experience, and supervised clinical experience as follows—

(1) 200 hours of classroom and laboratory training that includes—

(i) Radiation physics and instrumentation;

(ii) Radiation protection;

(iii) Mathematics pertaining to the use and measurement of radioactivity; and

(iv) Radiation biology;

(2) 500 hours of supervised work experience under the supervision of an authorized user at a medical institution that includes—

(i) Review of the full calibration measurements and periodic spot-checks;

(ii) Preparing treatment plans and calculating treatment times;

(iii) Using administrative controls to prevent medical events;

(iv) Implementing emergency procedures to be followed in the event of the abnormal operation of the medical device or console; and

(v) Checking and using survey meters; and

(3) Three years of supervised clinical experience that includes one year in a formal training program approved by the Residency Review Committee for Radiology of the Accreditation Council for Graduate Medical Education or the Committee on Postdoctoral Training of the American Osteopathic Association and an additional two years of clinical experience in therapeutic radiology under the supervision of an authorized user at a medical institution that includes—

(i) Examining individuals and reviewing their case histories to determine their suitability for teletherapy, remote afterloader, or gamma stereotactic radiosurgery treatment, and any limitations or contraindications;

(ii) Selecting the proper dose and how it is to be administered;

(iii) Calculating the doses and collaborating with the authorized user in the review of patients' or human research subjects' progress and consideration of the need to modify originally prescribed doses as warranted by patients' or human research subjects' reaction to radiation; and

(iv) Post-administration follow up and review of case histories.

§ 35.961 Training for authorized medical physicist.

The licensee shall require the authorized medical physicist to be an individual who—

(a) Is certified by the American Board of Radiology in—

(1) Therapeutic radiological physics;

(2) Roentgen ray and gamma ray physics;

(3) X-ray and radium physics; or

(4) Radiological physics; or

(b) Is certified by the American Board of Medical Physics in radiation oncology physics; or

(c) Holds a master's or doctor's degree in physics, biophysics, radiological physics, or health physics, and has completed 1 year of full time training in therapeutic radiological physics and an additional year of full time work experience under the supervision of a medical physicist at a medical institution that includes the tasks listed in §§ 35.67, 35.632, 35.633, 35.635, 35.642, 35.643, 35.644, 35.645 and 35.652, as applicable.

§ 35.980 Training for an authorized nuclear pharmacist.

The licensee shall require the authorized nuclear pharmacist to be a pharmacist who—

(a) Has current board certification as a nuclear pharmacist by the Board of Pharmaceutical Specialties; or

(b)(1) Has completed 700 hours in a structured educational program consisting of both—

(i) Didactic training in the following areas:

(A) Radiation physics and instrumentation;

(B) Radiation protection;

(C) Mathematics pertaining to the use and measurement of radioactivity;

(D) Chemistry of byproduct material for medical use; and

(E) Radiation biology; and

(ii) Supervised experience in a nuclear pharmacy involving the following—

(A) Shipping, receiving, and performing related radiation surveys;

(B) Using and performing checks for proper operation of dose calibrators, survey meters, and, if appropriate, instruments used to measure alpha- or beta-emitting radionuclides;

(C) Calculating, assaying, and safely preparing dosages for patients or human research subjects;

(D) Using administrative controls to avoid mistakes in the administration of byproduct material;

(E) Using procedures to prevent or minimize contamination and using proper decontamination procedures; and

(2) Has obtained written certification, signed by a preceptor authorized nuclear pharmacist, that the above training has been satisfactorily completed and that the individual has achieved a level of competency sufficient to independently operate a nuclear pharmacy.

§ 35.981 Training for experienced nuclear pharmacists.

A licensee may apply for and must receive a license amendment identifying an experienced nuclear pharmacist as an authorized nuclear pharmacist before it allows this individual to work as an authorized nuclear pharmacist. A pharmacist who has completed a structured educational program as specified in § 35.980(b)(1) before December 2, 1994, and who is working in a nuclear pharmacy would qualify as an experienced nuclear pharmacist. An experienced nuclear pharmacist need not comply with the requirements for a preceptor statement (§ 35.980(b)(2)) and recentness of training (§ 35.59) to qualify as an authorized nuclear pharmacist.

Subpart K—Other Medical Uses of Byproduct Material or Radiation From Byproduct Material

§ 35.1000 Other medical uses of byproduct material or radiation from byproduct material.

A licensee may use byproduct material or a radiation source approved for medical use which is not specifically addressed in subparts D through H of this part if—

(a) The applicant or licensee has submitted the information required by § 35.12(d); and

(b) The applicant or licensee has received written approval from the Commission in a license and uses the material in accordance with the regulations and specific conditions the Commission considers necessary for the medical use of the material.

Subpart L—Records

§ 35.2024 Records of authority and responsibilities for radiation protection programs.

(a) A licensee shall retain a record of actions taken by the licensee's management in accordance with § 35.24(a) for 5 years. The record must include a summary of the actions taken and a signature of licensee management.

(b) The licensee shall retain a current copy of the authorities, duties and responsibilities of the radiation safety officer, as required by § 35.24(d), and a signed copy of the radiation safety officer's willingness to be responsible for implementing the radiation safety program, as required by § 35.24(b). The records must include the signature of the radiation safety officer and licensee management.

§ 35.2026 Records of radiation protection program safety changes.

A licensee shall retain a record of each radiation protection program change made in accordance with § 35.26(a) for 5 years. The record must include a copy of the old and new procedures; the effective date of the change; and the signature of the radiation safety officer and the licensee management that reviewed and approved the change.

§ 35.2040 Records of written directives.

A licensee shall retain a copy of each written directive as required by § 35.40 for 3 years.

§ 35.2045 Records of medical events.

A licensee shall retain a record of medical events reported pursuant to § 35.3045 for 3 years. The record must contain the licensee's name, names of all the individuals involved, the affected or potentially affected individual's social security number or other identification number if one has been assigned, a brief description of the medical event, why it occurred, the effect on the individual, and the actions taken to prevent recurrence.

§ 35.2060 Records of instrument calibrations.

A licensee shall maintain a record of instrument calibrations required by §§ 35.60 and 35.62 for 3 years. The records must include—

(a) For constancy, the model and serial number of the instrument, the identity of the radionuclide contained in the check source, the date of the check, and the activity measured, and the name of the individual who performed the check;

(b) For accuracy, the model and serial number of the instrument, the model and serial number of each source used, the identity of the radionuclide contained in the source and its activity, the date of the test, and the results of the test, and the name of the individual who performed the test;

(c) For linearity, the model and serial number of the instrument, the calculated activities, the measured activities, and the date of the test, and the name of the individual who performed the test; and

(d) For geometric dependence, the model and serial number of the instrument, the configuration of the source measured, the activity measured for each volume measured, and the date of the test, and the name of the individual who performed the test.

§ 35.2061 Records of radiation survey instrument calibrations.

A licensee shall maintain a record of radiation survey instrument calibrations required by § 35.61 for 3 years. The record must include—

(a) A description of the calibration procedure; and

(b) The date of the calibration, a description of the source used and the certified exposure rates from the source, and the rates indicated by the instrument being calibrated, the correction factors deduced from the calibration data, and the name of the individual who performed the calibration.

§ 35.2063 Records of dosages of unsealed byproduct material for medical use.

(a) A licensee shall maintain a record of dosage determinations required by § 35.63 for 3 years.

(b) To satisfy this requirement, the record must contain the—

(1) Radionuclide, generic name, trade name, or abbreviation of the radiopharmaceutical, and its lot number;

(2) Patient's or human research subject's name, or identification number if one has been assigned;

(3) Prescribed dosage and activity of the dosage at the time of determination, or a notation that the total activity is less than 1.1 MBq (30 μCi);

(4) Date and time of the dosage determination; and

(5) Name of the individual who determined the dosage.

§ 35.2067 Records of possession of sealed sources and brachytherapy sources.

(a) A licensee shall retain records of leak tests required by § 35.67(b) for 3 years. The records must contain the model number, and serial number if one has been assigned, of each source tested, the identity of each source radionuclide and its estimated activity, the measured activity of each test sample, a description of the method used to measure each test sample, the date of the test, and the name of the individual who performed the test.

(b) A licensee shall retain records of the semi-annual physical inventory of sealed sources and brachytherapy sources required by § 35.67(g) for 3 years. The inventory records must contain the model number of each source, and serial number if one has been assigned, the identity of each source radionuclide and its nominal activity, the location of each source, and the name of the individual who performed the inventory.

§ 35.2070 Records of surveys for ambient radiation exposure rate.

A licensee shall retain a record of each survey required by § 35.70 for 3 years. The record must include the date of the survey, a plan of each area surveyed, the trigger level established for each area, the detected dose rate at several points in each area expressed in millirem per hour or the removable contamination in each area expressed in disintegrations per minute per 100 square centimeters, the instrument used to make the survey or analyze the samples, and the name of the individual who performed the survey.

§ 35.2075 Records of the release of individuals containing radiopharmaceuticals or implants.

(a) A licensee shall retain records of the release of individuals containing pharmaceuticals or implants in accordance with § 35.75 for 3 years after the date of release.

(b) A licensee shall retain a record in accordance with paragraph (a) of this section that describes the basis for authorizing the release of individuals if the total effective dose equivalent is calculated by—

(1) Using the retained activity rather than the activity administered;

(2) Using an occupancy factor less than 0.25 at 1 meter;

(3) Using the biological or effective half-life; or

(4) Considering the shielding by tissue.

(c) A licensee shall retain a record that the instructions required by § 35.75(b) were provided to a breast-feeding woman if the radiation dose to the infant or child from continued breast-feeding could result in a total effective dose equivalent exceeding 5 mSv (0.5 rem).

§ 35.2080 Records of administrative and technical requirements that apply to the provision of mobile services.

(a) A licensee shall retain a copy of the letter(s) that permits the use of byproduct material at a client's address of use, in accordance with § 35.80(a)(1). This letter must clearly delineate the authority and responsibility of each entity and must be retained for 3 years after the last provision of service.

(b) A licensee shall retain the record of each survey required by § 35.80(a)(4) for 3 years. The record must include the date of the survey, a plan of each area that was surveyed, the measured dose rate at several points in each area of use expressed in millirem per hour, the instrument used to make the survey, and the name of the individual who performed the survey.

§ 35.2092 Records of waste disposal.

A licensee shall maintain records of the disposal of licensed materials made in accordance with § 35.92 for 3 years. The record must include the date of the disposal, the radionuclides disposed, the survey instrument used, the background dose rate, the dose rate measured at the surface of each waste container, and the name of the individual who performed the disposal.

§ 35.2204 Records of molybdenum-99 concentrations.

A licensee shall maintain a record of the molybdenum-99 concentration tests required by § 35.204(b) for 3 years. The record must include, for each measured elution of technetium-99m, the ratio of the measures expressed as microcuries of molybdenum per millicurie of technetium, the time and date of the measurement, and the name of the individual who made the measurement.

§ 35.2310 Records of instruction and training.

A licensee shall maintain a record of instructions and training required by §§ 35.310, 35.410, and 35.610 for 3 years. The record must include a list of the topics covered, the date of the instruction or training, the name(s) of the attendee(s), and the name(s) of the individual(s) who provided the instruction.

§ 35.2404 Records of radiation surveys of patients and human research subjects.

A licensee shall maintain a record of the radiation surveys of patients and human research subjects required by §§ 35.404 and 35.604 for 3 years. Each record must include the date, location, and results of the survey, an identifier for the patient or the human research subject, the survey instrument used, and the name of the individual who made the survey.

§ 35.2406 Records of brachytherapy source inventory.

(a) A licensee shall maintain a record of brachytherapy source accountability required by § 35.406 for 3 years.

(b) For temporary implants, the record must include—

(1) The number and activity of sources removed from storage, the time and date they were removed from storage, the name of the individual who removed them from storage, and the location of use; and

(2) The number and activity of sources returned to storage, the time and date they were returned to storage, and the name of the individual who returned them from storage.

(c) For permanent implants, the record must include—

(1) The number and activity of sources removed from storage, the date they were removed from storage, and the name of the individual who removed them from storage;

(2) The number and activity of sources returned to storage, the date they were returned to storage, and the name of the individual who returned them to storage; and

(3) The number and activity of sources permanently implanted in the patient or human research subject.

§ 35.2432 Records of full calibrations on brachytherapy sources.

A licensee shall maintain a record of the full calibrations on brachytherapy sources required by § 35.432 for 3 years after the last use of the source. The record must include the date of the calibration; the manufacturer's name, model number, and serial number for the source and instruments used to calibrate the source; the source output; source positioning accuracy within applicators; and the name of the individual or the source manufacturer who performed the calibration.

§ 35.2605 Records of installation, maintenance, and repair.

A licensee shall retain a record of the installation, maintenance, and repair of therapeutic medical devices as required by § 35.605 for 3 years. For each installation, maintenance, and repair, the record must include the date, description of the service, and name(s) of the individual(s) who performed the work.

§ 35.2630 Records of dosimetry equipment.

(a) A licensee shall retain a record of the calibration, intercomparison, and comparisons of its dosimetry equipment done in accordance with § 35.630 for the duration of the license.

(b) For each calibration, intercomparison, or comparison, the record must include—

(1) The date;

(2) The model numbers and serial numbers of the instruments that were calibrated, intercompared, or compared as required by paragraphs (a) and (b) of § 35.630;

(3) The correction factor that was determined from the calibration or comparison or the apparent correction factor that was determined from an intercomparison; and

(4) The name(s) of the individual(s) who performed the calibration, intercomparison, or comparison.

§ 35.2632 Records of teletherapy full calibrations.

(a) A licensee shall maintain a record of the teletherapy full calibrations required by § 35.632 for 3 years.

(b) The record must include—

(1) The date of the calibration;

(2) The manufacturer's name, model number, and serial number for the teletherapy unit, source, and instruments used to calibrate the teletherapy unit;

(3) Tables that describe the output of the unit over the range of field sizes and for the range of distances used in radiation therapy;

(4) A determination of the coincidence of the radiation field and the field indicated by the light beam localizing device;

(5) An assessment of timer accuracy and linearity;

(6) The calculated on-off error;

(7) The estimated accuracy of each distance measuring and localization device; and

(8) The signature of the authorized medical physicist who performed the full calibration.

§ 35.2633 Records of remote afterloader full calibrations.

(a) A licensee shall maintain a record of the remote afterloader full calibrations required by § 35.633 for 3 years.

(b) The record must include—

(1) The date of the calibration;

(2) The manufacturer's name, model number, and serial number for the remote afterloader, source, and instruments used to calibrate the unit; the source output;

(3) An assessment of timer accuracy and linearity, source positioning accuracy, source guide tube and connector lengths, and source retraction functionality; and

(4) The signature of the authorized medical physicist who performed the full calibration.

§ 35.2635 Records of gamma stereotactic radiosurgery unit full calibrations.

(a) A licensee shall maintain a record of the gamma stereotactic radiosurgery full calibrations required by § 35.635 for 3 years.

(b) The record must include—

(1) The date of the calibration;

(2) The manufacturer's name, model number, and serial number for the gamma stereotactic radiosurgery unit, source, and instruments used to calibrate the unit;

(3) The unit output;

(4) An assessment of the relative helmet factors, isocenter coincidence, timer accuracy and linearity, on-off error, and trunnion centricity; and

(5) The signature of the authorized medical physicist who performed the full calibration.

§ 35.2642 Records of periodic spot-checks for teletherapy units.

(a) A licensee shall retain a record of each periodic spot-check for teletherapy units required by § 35.642 for 3 years.

(b) The record must include —

(1) The date of the spot-check;

(2) The manufacturer's name, model number, and serial number for the teletherapy unit, source and instrument used to measure the output of the teletherapy unit;

(3) An assessment of timer linearity and constancy;

(4) The calculated on-off error;

(5) A determination of the coincidence of the radiation field and the field indicated by the light beam localizing device;

(6) The determined accuracy of each distance measuring and localization device;

(7) The difference between the anticipated output and the measured output;

(8) Notations indicating the operability of each entrance door electrical interlock, each electrical or mechanical stop, each source exposure indicator light, and the viewing and intercom system and doors; and

(9) The name of the individual who performed the periodic spot-check and the signature of the authorized medical physicist who reviewed the record of the spot-check.

§ 35.2643 Records of periodic spot-checks for remote afterloaders.

(a) A licensee shall retain a record of each spot-check for remote afterloaders required by §§ 35.643 and 35.644 for 3 years.

(b) The record must include—

(1) The date of the spot-check;

(2) The manufacturer's name, model number, and serial number for the remote afterloader, source, and instrument used to measure the output of the remote afterloader;

(3) The difference between the anticipated output and the measured output;

(4) Notations indicating the operability of each entrance door electrical interlock, source retraction mechanism, radiation monitors, source exposure indicator lights, viewing and intercom systems if applicable, applicators and connectors, and source positioning accuracy; and

(5) The name of the individual who performed the periodic spot-check and the signature of the authorized medical physicist who reviewed the record of the spot-check.

§ 35.2645 Records of periodic spot-checks for gamma stereotactic radiosurgery units.

(a) A licensee shall retain a record of each spot-check for gamma stereotactic radiosurgery units required by § 35.645 for 3 years.

(b) The record must include—

(1) The date of the spot-check;

(2) The manufacturer's name, model number, and serial number for the gamma stereotactic radiosurgery unit and the instrument used to measure the output of the unit;

(3) The measured source output and source output against computer calculations;

(4) Notations indicating the operability of radiation monitors, helmet microswitchs, emergency timing circuits, emergency off buttons, electrical interlocks, source exposure indicator lights, viewing and intercom systems, timer termination systems, hydraulic cutoff switch and stereotactic frames and localizing devices (trunnions); and

(5) The name of the individual who performed the periodic spot-check and the signature of the authorized medical physicist who reviewed the record of the spot-check.

§ 35.2647 Records of additional technical requirements for mobile remote afterloaders.

(a) A licensee shall retain a record of each check for mobile remote afterloaders required by § 35.647 for 3 years.

(b) The record must include—

(1) The date of the check;

(2) The manufacturer's name, model number, and serial number of the remote afterloader;

(3) Notations accounting for all sources before the licensee departs from a facility;

(4) Notations indicating the operability of each entrance door electrical interlock, radiation monitors, source exposure indicator lights, viewing and intercom system, applicators and connectors, and source positioning accuracy; and

(5) The signature of the individual who performed the check.

§ 35.2652 Records of surveys of therapeutic treatment units.

(a) A licensee shall maintain a record of radiation surveys of treatment units made in accordance with § 35.652 for the duration of use of the unit.

(b) The record must include—

(1) The date of the measurements;

(2) The manufacturer's name, model number and serial number of the treatment unit, source, and instrument used to measure radiation levels;

(3) Each dose rate measured around the source while the unit is in the off position and the average of all measurements; and

(4) The signature of the individual who performed the test.

§ 35.2655 Records of 5-year inspection for teletherapy and gamma stereotactic surgery units.

(a) A licensee shall maintain a record of the 5-year inspections for teletherapy and gamma stereotactic radiosurgery units required by § 35.655 for the duration of use of the unit.

(b) The record must contain—

(1) The inspector's radioactive materials license number;

(2) The date of inspection;

(3) The manufacturer's name and model number and serial number of both the treatment unit and source;

(4) A list of components inspected and serviced, and the type of service; and

(5) The signature of the inspector.

Subpart M—Reports

§ 35.3045 Reports of medical events.

(a) A licensee shall report any administration, except for administrations resulting from a direct intervention of a patient or human research subject that could not have been reasonably prevented by the licensee, that results in either—

(1) A dose that differs from the prescribed dose by more than 0.05 Sv (5 rem) effective dose equivalent, 0.5 Sv (50 rem) to an organ or tissue, or 0.5 Sv (50 rem) shallow dose equivalent to the skin; and

(i) The total dose or dosage delivered differs from the prescribed dose or dosage by 20 percent or more; or

(ii) The fractionated dose delivered differs from the prescribed dose, for a single fraction, by 50 percent or more.

(2) A dose that exceeds 0.05 Sv (5 rem) effective dose equivalent, 0.5 Sv (50 rem) to an organ or tissue, or 0.5 Sv (50 rem) shallow dose equivalent to the skin from any of the following—

(i) An administration of a wrong pharmaceutical;

(ii) An administration of a radiopharmaceutical by the wrong route of administration;

(iii) An administration of a dose or dosage to the wrong individual or human research subject;

(iv) An administration of a dose or dosage delivered by the wrong treatment mode; or

(v) A leaking sealed source.

(3) A dose to the skin or an organ or tissue other than the treatment site that exceeds by 0.5 Sv (50 rem) to an organ or tissue and 20 percent the dose expected from the administration defined in the written directive.

(b) The licensee shall notify by telephone the NRC Operations Center (301–951–0550) no later than the next calendar day after discovery of the medical event.

(c) The licensee shall submit a written report to the appropriate NRC Regional Office listed in § 30.6 of this chapter within 15 days after discovery of the medical event.

(1) The written report must include—

(i) The licensee's name;

(ii) The name of the prescribing physician;

(iii) A brief description of the event;

(iv) Why the event occurred;

(v) The effect on the individual(s) who received the administration;

(vi) What improvements are needed to prevent recurrence;

(vii) Actions taken to prevent recurrence;

(viii) Whether the licensee notified the individual (or the individual's responsible relative or guardian), and if not, why not; and

(ix) If there was notification, what information was provided.

(2) The report must not contain the individual's name or any other information that could lead to identification of the individual.

(d) The licensee shall notify the referring physician and also notify the individual affected by the medical event no later than 24 hours after its discovery, unless the referring physician personally informs the licensee either that he or she will inform the individual or that, based on medical judgement, telling the individual would be harmful. The licensee is not required to notify the individual without first consulting the referring physician. If the referring physician or the affected individual cannot be reached within 24 hours, the licensee shall notify the individual as soon as possible thereafter. The licensee may not delay any appropriate medical care for the individual, including any necessary remedial care as a result of the medical event, because of any delay in notification. To meet the requirements of this section, the notification of the individual receiving the medical event may be made instead to that individual's responsible relative or guardian, when appropriate.

(e) If the individual was notified pursuant to paragraph (d) of this section, the licensee shall also furnish, within 15 days after discovery of the medical event, a written report to the individual by sending either—

(1) A copy of the report that was submitted to the NRC; or

(2) A brief description of both the event and the consequences as they may affect the individual.

(f) Aside from the notification requirement, nothing in this section affects any rights or duties of licensees and physicians in relation to each other, to individuals affected by the medical event, or to that individual's responsible relatives or guardians.

§ 35.3047 Report of a dose to an embryo/fetus or a nursing child.

(a) A licensee shall report any dose to an embryo/fetus that is greater than 5 mSv (500 mrem) absorbed dose that is a result of an administration of byproduct material or radiation from byproduct material to a pregnant individual unless the dose to the embryo/fetus was specifically approved, in advance, by the authorized user.

(b) A licensee shall report any dose to a nursing child that is greater than 5 mSv (500 mrem) total effective dose equivalent that is a result of an administration of byproduct material to a breast feeding individual.

(c) The licensee shall notify by telephone the NRC Operations Center within 5 days after discovery of a dose to the embryo/fetus or nursing child that requires a report in paragraphs (a) or (b) in this section.

(d) The licensee shall submit a written report to the appropriate NRC Regional Office listed in § 30.6 no later than 15 days after discovery of a dose to the embryo/fetus or nursing child that requires a report in paragraphs (a) or (b) in this section.

(1) The written report must include—

(i) The licensee's name;

(ii) The name of the prescribing physician;

(iii) A brief description of the event;

(iv) Why the event occurred;

(v) The effect on the embryo/fetus or the nursing child;

(vi) What improvements are needed to prevent recurrence; and

(vii) Actions taken to prevent recurrence.

(2) The report must not contain the individual's or child's name or any other information that could lead to identification of the individual or child.

(e) The licensee shall notify the referring physician and also notify the pregnant individual or mother, hereafter referred to as the mother, within 5 days of discovery of an event that would require reporting under paragraph (a) or (b) of this section, unless the referring physician personally informs the licensee either that he or she will inform the mother or that, based on medical judgment, telling the mother would be harmful;

(f) To meet the requirements of this section, the notification of the mother may be made instead to the mother's or child's responsible relative or guardian, when appropriate.

(g) The licensee is not required to notify the mother without first consulting the referring physician. If the referring physician or mother cannot be reached within 5 days, the licensee shall make the appropriate notifications as soon as possible thereafter. The licensee may not delay any appropriate medical care for the embryo/fetus or for the nursing child, including any necessary remedial care as a result of the event, because of any delay in notification.

(h) If notification was made pursuant to paragraphs (e) and (f) of this section, the licensee shall also furnish, within 15 days after discovery of the event, a written report to the mother or responsible relative or guardian, by sending either—

(1) A copy of the report that was submitted to the NRC; or

(2) A brief description of both the event and the consequences as they may affect the embryo/fetus or nursing child.

§ 35.3067 Reports of leaking sources.

A licensee shall file a report within 5 days if a leakage test required by § 35.67 reveals the presence of 185 Bq (0.005 μCi) or more of removable contamination. The report must be filed with the appropriate NRC Regional Office listed in § 30.6 of this chapter, with a copy to the Director, Office of Nuclear Material Safety and Safeguards, U.S. Nuclear Regulatory Commission, Washington, DC 20555–0001. The written report must include the model number and serial number if assigned, of the leaking source; the radionuclide and its estimated activity; the measured activity of each test sample expressed in microcuries; a description of the method used to measure each test sample; the date of the test; and the action taken.

Subpart N—Enforcement

§ 35.4001 Violations.

(a) The Commission may obtain an injunction or other court order to prevent a violation of the provisions of—

(1) The Atomic Energy Act of 1954, as amended;

(2) Title II of the Energy Reorganization Act of 1974, as amended; or

(3) A regulation or order issued pursuant to those Acts.

(b) The Commission may obtain a court order for the payment of a civil penalty imposed under Section 234 of the Atomic Energy Act:

(1) For violations of—

(i) Sections 53, 57, 62, 63, 81, 82, 101, 103, 104, 107, or 109 of the Atomic Energy Act of 1954, as amended;

(ii) Section 206 of the Energy Reorganization Act;

(iii) Any rule, regulation, or order issued pursuant to the sections specified in paragraph (b)(1)(i) of this section;

(iv) Any term, condition, or limitation of any license issued under the sections specified in paragraph (b)(1)(i) of this section.

(2) For any violation for which a license may be revoked under Section 186 of the Atomic Energy Act of 1954, as amended.

§ 35.4002 Criminal penalties.

(a) Section 223 of the Atomic Energy Act of 1954, as amended, provides for criminal sanctions for willful violation of, attempted violation of, or conspiracy to violate, any regulation issued under sections 161b, 161i, or 161o of the Act. For purposes of Section 223, all the regulations in 10 CFR part 35 are issued under one or more of sections 161b, 161i, or 161o, except for the sections listed in paragraph (b) of this section.

(b) The regulations in 10 CFR part 35 that are not issued under subsections 161b, 161i, or 161o for the purposes of Section 223 are as follows: §§ 35.1, 35.2, 35.7, 35.8, 35.12, 35.15, 35.18, 35.19, 35.65, 35.100, 35.200, 35.300, 35.600, 35.4001, and 35.4002.

Appendix A to 10 CFR Part 35—Examining Organization or Entity

I. Requirements for an examining organization or entity.

An independent organization or entity that submits an application for approval of the Commission to examine individuals pursuant to §§ 35.50(b)(3), 35.51(b)(3), 35.55(b)(3), 35.290(b)(3), 35.292(b)(3), 35.390(b)(4), 35.490(b)(4), or 35.690(b)(4) shall:

1. Make its examination process available to the general public nationwide and ensure that it is not restricted because of race, color, religion, sex, age, national origin, or disability;

2. Have an adequate staff, a viable system for financing its operations, and a policy-and decision-making review board;

3. Have a set of written organizational by-laws and policies that provide adequate assurance of lack of conflict of interest and a system for monitoring and enforcing those by-laws and policies;

4. Have a committee, whose members can carry out their responsibilities impartially, to review and approve the examination guidelines and procedures, and to advise the organization's staff in implementing the examination program;

5. Have a committee, whose members can carry out their responsibilities impartially, to review complaints by examined individuals;

6. Have written procedures describing all aspects of its examination program, maintain records of the current status of each individual's examination and the administration of its examination program;

7. Have procedures to ensure that examinations are not given to individuals who have also been instructed by the examining organization in the same subject area;

8. Have procedures to ensure that examined individuals are provided due process with respect to the administration of its examination program, including the process of being examined;

9. Have procedures for proctoring examinations, including qualifications for proctors.

10. Exchange information about examined individuals with the Commission and other independent examining organizations and/or Agreement States and allow periodic review of its examination program and related records;

11. Provide a description to the Commission of its procedures for choosing examination sites and for providing an appropriate examination environment; and

12. Submit its request to the Director, Office of Nuclear Materials Safety and Safeguards, U.S. Nuclear Regulatory Commission, Washington, DC 20555–0001.

II. Requirements for Examination Programs.

All examination programs must—

1. Require applicants for examination to receive training in the topics set forth in §§ 35.50(b)(1), 35.51(b)(1), 35.55(b)(1), 35.290(b)(1), 35.292(b)(1), 35.390(b)(1), 35.490(b)(1) or 35.690(b)(1), or equivalent Agreement State regulations, and satisfactorily complete a written examination covering these topics; and

2. Include procedures to ensure that all examination questions are protected from improper disclosure.

III. Requirements for Written Examinations.

1. All examinations must be designed to test an individual's knowledge and understanding of the topics listed in §§ 35.50(b)(1), 35.51(b)(1), 35.55(b)(1), 35.290(b)(1), 35.292(b)(1), 35.390(b)(1), 35.490(b)(1) or 35.690(b)(1), or equivalent Agreement State regulations;

2. Test questions must be drawn from a question bank containing psychometrically valid questions based on the material in §§ 35.50(b)(1), 35.51(b)(1), 35.55(b)(1), 35.290(b)(1), 35.292(b)(1), 35.390(b)(1), 35.490(b)(1) or 35.690(b)(1), or equivalent Agreement State regulations; and

3. Sample examinations must be submitted to the Commission for review initially and every 5 years.

Dated at Rockville, Maryland, this 5th day of August, 1998.

For the Nuclear Regulatory Commission.

John C. Hoyle,

Secretary of the Commission.

Note: This appendix will not appear in the Code of Federal Regulations.

Appendix A—Preliminary Regulatory Flexibility Analysis

The NRC is required by the Regulatory Flexibility Act (RFA) (5 U.S.C. 601 *et seq.*) as

amended by the Small Business Regulatory Enforcement Fairness Act (SBREFA) to consider the impact of their rulemakings on small entities and evaluate alternatives that would accomplish regulatory objectives without unduly burdening small entities or erecting barriers to competition. This analysis describes the assessment of the small entity impacts expected to be incurred by 10 CFR Part 35 licensees as a result of the comprehensive revisions to Part 35 being proposed.

An assessment of small entity impacts involves three major tasks: (1) defining ''small entities'' for the rule being analyzed, including ''small businesses,'' ''small governments,'' and ''small organizations;'' (2) determining what number constitutes a ''substantial number'' of these entities; and (3) determining if ''significant impacts'' will be incurred by licensees under the proposed rule.

1.1 Defining ''Small Entities'' Affected by the Rule

The NRC has established size standards that it uses to determine which NRC licensees qualify as small entities (60 FR 18344; April 11, 1995). These size standards are codified in 10 CFR 2.810. The size standards pertinent to Part 35 licensees include the following:

Under 10 CFR 2.810(a)(1), a small business is a for-profit concern and is a concern that provides a service or a concern not engaged in manufacturing with average gross receipts of $5 million or less over its last 3 completed fiscal years. (The Small Business Administration size standards for the ''health services'' category, including ''offices and clinics of doctors of medicine'' and all other health services subcategories also establish $5 million as the cut off point for ''small entities.'')

Under 10 CFR 2.810 (b) a small organization is a not-for-profit organization which is independently owned and operated and has annual gross receipts of $5 million or less.

For purposes of this analysis, therefore, ''small entity'' refers to any specific licensee under 10 CFR Part 35 with annual gross receipts of $5 million or less.

The proposed rule would affect 1902 NRC licensees. These licenses are issued principally to medical institutions, with at least 1216 of the Part 35 licensees classified as medical institutions (codes 2110, 2120, and 2121 in NRC's licensee tracking system). Review of available data indicates that at most 8 of these medical institutions had operating revenues of less than $5 million in 1996.

First, all hospitals in States in which Part 35 licensees are regulated by NRC were screened for revenues, using data obtained from *Profiles of U.S. Hospitals*, 1996, HCIA Inc. HCIA collects, analyzes, and publishes data on hospitals, based on financial submissions to the Health Care Financing Administration (HCFA). Revenues were measured as operating revenue, which is the sum of *net* patient revenue and other operating revenue, such as revenue from sources such as cafeterias and parking facilities, but which does not include revenue from non-operating sources such as investment income or donations. Operating revenue therefore is a less inclusive measure of revenues than gross revenues. All hospitals identified as having operating revenues less than $5 million then were checked against the NRC License Tracking System to identify those medical institutions that both had revenues less than $5 million and were regulated by NRC under Part 35. Of the eight institutions that were identified as meeting both criteria, three had operating revenues above $4.4 million, and therefore may have gross revenues above $5 million. They have, however, been included in the group of institutions with less than $5 million in revenues for this analysis.

The balance of the licenses, approximately 686 licenses, are issued principally to physicians in private practice. Information on gross revenues for such physicians suggests that all may be ''small entities.''

First, data from the AMA's Socioeconomic Monitoring System, provided in *Physician Marketplace Statistics 1996: Profiles for Detailed Specialties, Selected States and Practice Arrangements*, Center for Health Policy Research, American Medical Association, were reviewed for physicians' revenues or income. Table 89 of that source, which reports ''Total Practice Revenue per Self-Employed Nonfederal Physician (in thousands of dollars), 1995'' indicates that even at the 75th percentile no physician specialty, geographic area, or practice arrangement exceeded even $1 million in revenues. Similar data from the *Physician Compensation and Production Survey: 1996 Report Based on 1995 Data*, Medical Group Management Association, indicate that the median for ''production,'' defined as gross charges, for all physicians was $422,937 in 1995 (p. 10). Although ''production'' generally is larger for specialists than all physicians, the difference is too small to place specialists above the $5 million criterion.

In total, therefore, an upper bound estimate of 36 percent of Part 35 licensees, or approximately 686 licensees, may be ''small entities.''

1.2 Determining What Number Constitutes a Substantial Number

This analysis applied a figure corresponding to 20 percent of small entities in determining whether a ''substantial number'' of small entities are likely to be impacted by the rule. Therefore, based on the analysis in section 1.1, the proposed rule would affect a substantial number of small entities.

1.3 Measuring ''Significant Impacts''

To evaluate the impact that a small entity is expected to incur as a result of the rule, the analysis should calculate the entity's ratio of annualized compliance costs as a percentage of gross receipts. Entities are classified as facing potentially ''significant'' impacts if this ratio exceeds one percent.

Determining annual compliance costs for the revisions to Part 35, however, is complicated by the fact that the proposed rule would comprehensively address a wide variety of uses of byproduct materials in medicine. The entities likely to be most affected by the rule are broad scope medical institutions with a large number of different modalities and conducting a large number of medical procedures involving byproduct material or radiation from byproduct material. However, the preceding analysis indicated that such broad scope licensees are not small entities. The costs attributable to Part 35 compliance for such broad scope licensees will be substantially greater than the annual compliance costs likely to be incurred by those licensees most likely to be small entities (i.e., single private practice physicians performing diagnostic procedures).

The Part 35 rule addresses contingent actions as well as actions that must be carried out by all licensees. In particular, the lower risk posed by diagnostic procedures reduces the likelihood that private practice physicians performing diagnostic procedures will experience medical events involving costs of reporting and follow up.

All licensees will incur annual compliance costs for general administrative and technical requirements established by Part 35, although the level of such compliance costs will vary significantly depending on certain contingencies and on the activities being performed by the licensee. Annual compliance costs for licensees are expected, in all cases, to involve compliance with requirements to establish and maintain a radiation protection program; possess, use, calibrate, and check survey instruments, and satisfy the requirements pertinent to the modality or modalities used by the licensee.

NRC estimates that annual compliance costs for a licensee carrying out any level of activities under Part 35 will in all cases exceed 80 hours annually at $100 per hour, or $8,000. Assuming annual revenues of $244,000 for a single private practitioner subject to Part 35, as estimated in *Socioeconomic Characteristics of Medical Practice, 1997*, American Medical Association, Center for Health Policy Research, Table 43. ''Mean Physician Net Income (in thousands of dollars) after Expenses before Taxes, 1995,'' for the net income for ''all physicians-rad,'' a very conservative surrogate for gross revenues, these annual compliance costs exceed both the one percent cutoff level and the three percent cutoff level under SBREFA for ''significant impacts.'' Assuming an average ''production'' of $423,000, (Section 1.1 of this analysis), however, the 1 percent but not the 3 percent cutoff is exceeded. Therefore, the proposed rule appears to have significant impacts on a significant number of licensees.

NRC has taken a number of actions in this proposed rule to ensure that the proposed alternative is the least costly alternative that adequately protects workers and patients from radiation exposure. As the Regulatory Analysis prepared for the proposed rule demonstrates, the total annual cost to licensees of compliance with the proposed rule would be approximately $9.87 million less than the cost of compliance with the current rule (See XII. Regulatory Analysis of the Supplementary Information section of this document). This is equivalent to savings of approximately $1500 per licensee. Although savings to small licensees can be expected to be proportionately less than

savings to licensees with more extensive operations, smaller licensees also can be expected to incur smaller compliance costs.

In order to assist small licensees, the NRC has sought in the proposed rule to eliminate prescriptive requirements wherever possible, and to allow for much greater flexibility in compliance. Such flexibility is particularly helpful to small licensees in reducing their cost of compliance, because it will enable them to avoid the costs of radiation safety measures, such as the detailed requirements for Radiation Safety Committees, that were especially oriented toward larger licensees with numerous modalities and activities in the same institution. NRC has reduced the training and experience requirements applicable to the diagnostic use of byproduct material by focusing those requirements on radiation safety and by reducing the number of hours of training required. NRC has also sought to reduce the prescriptive nature of requirements for testing and calibration, and to reduce reporting and recordkeeping burdens, which can have an especially strong impact on small entities.

Finally, the program for revising Part 35 and the associated guidance documents has involved more interactions and consultations with potentially affected parties (the medical community and the public, including representatives of small licensees) than is provided by the typical notice and comment rulemaking process. Early public input was solicited through several different mechanisms: requesting public input through **Federal Register** notices; holding open meetings of the government groups developing the revised rule language; meeting with medical professional societies and boards; putting background documents, options for the more significant regulatory issues associated with the rulemaking, and a ''strawman'' draft proposed rule on the Internet; and convening public workshops. Participants from the broad spectrum of interests that may be affected by the rulemaking were invited to attend the public workshops in Philadelphia, PA., and Chicago, IL., held in October and November 1997. The public was also welcome to attend these workshops, as well as the Part 35 Workshop that was held in conjunction with the All Agreement States Meeting in October 1997, and the NRC's Advisory Committee on the Medical Uses of Isotopes meetings in September 1997 and March 1998.

As indicated in the Regulatory Flexibility Analysis statement included in the proposed rule, the NRC requests comments from small medical licensees concerning the impacts of the proposed rule and any suggested modifications that may affect the economic impact of the proposed requirements.

[FR Doc. 98–21459 Filed 8–12–98; 8:45 am]

BILLING CODE 7590–01–P

U.S. NUCLEAR REGULATORY COMMISSION

10 CFR Chapter I

Medical Use of Byproduct Material; Draft Policy Statement

AGENCY: Nuclear Regulatory Commission.

ACTION: Draft policy statement.

SUMMARY: The Nuclear Regulatory Commission (NRC) is proposing, for formal comment, revisions of its 1979 policy statement on the medical use of byproduct material. These proposed revisions are one component of the Commission's overall program, as previously announced in the **Federal Register**, for revising its regulatory framework for medical use, including its regulations that govern the medical use of byproduct material. The overall goals of this program are to focus NRC regulation of medical use on those medical procedures that pose the highest risk and to structure its regulations to be risk-informed and performance-based, where appropriate, consistent with NRC's ''Strategic Plan for Fiscal Year 1997-Fiscal Year 2002.''

DATES: Submit comments by November 13, 1998. Comments received after this date will be considered if it is practical to do so, but the Commission is able only to ensure consideration of comments received on or before this date.

ADDRESSES: Send comments to: Secretary, U.S. Nuclear Regulatory Commission, Washington, DC 20555–0001, Attention: Rulemakings and Adjudications Staff.

You may also provide comments via NRC's interactive rulemaking web site through the NRC home page (http://www.nrc.gov). From the home page, select ''Rulemaking'' from the tool bar. The interactive rulemaking website can then be accessed by selecting ''New Rulemaking Website.'' This site provides the ability to upload comments as files (any format), if your web browser supports that function. For information about the interactive rulemaking web site, contact Ms. Carol Gallagher, (301) 415–5905; E-mail: cag@nrc.gov.

Deliver comments to: One White Flint North, 11555 Rockville Pike, Rockville, Maryland 20852, between 7:30 am and 4:15 pm Federal workdays.

Copies of comments received may be examined at: NRC Public Document Room, 120 L Street, NW. (Lower Level), Washington, DC.

FOR FURTHER INFORMATION CONTACT: Catherine Haney, Office of Nuclear Material Safety and Safeguards, Nuclear Regulatory Commission, Washington, DC 20555–0001, telephone (301) 415–6825, E-Mail: cxh@nrc.gov, or Marjorie U. Rothschild, Office of the General Counsel, Nuclear Regulatory Commission, Washington, DC 20555–0001, telephone (301) 415–1633, E-Mail: mur@nrc.gov.

SUPPLEMENTARY INFORMATION:

I. Background

In 1979, the Nuclear Regulatory Commission published a policy statement, ''Regulation of the Medical Uses of Radioisotopes'' (44 FR 8242; February 9, 1979), in which it informed NRC licensees, other Federal and State agencies, and the general public of the Commission's following general intention in regulating the medical use of byproduct material:

1. The NRC will continue to regulate the medical uses of radioisotopes as necessary to provide for the radiation safety of workers and the general public.

2. The NRC will regulate the radiation safety of patients where justified by the risk to patients and where voluntary standards, or compliance with these standards, are inadequate.

3. The NRC will minimize intrusion into medical judgments affecting patients and into other areas traditionally considered to be a part of the practice of medicine.

NRC activities in the medical area, such as promulgation of regulations and development of regulatory guidance, as well as cooperative relationships with other Federal agencies have been guided by this statement.

A **Federal Register** notice, ''Medical Use of Byproduct Material: Issues and Request for Public Input'' (62 FR 42219–42220; August 6, 1997), describes (as reflected below) NRC's detailed examination of the issues surrounding its medical use program during the last four years. This process started with NRC's 1993 internal senior management review; continued with the 1996 independent external review by the National Academy of Sciences (NAS), Institute of Medicine (IOM); and culminated in NRC's Strategic Assessment and Rebaselining Initiative (SA). In particular, medical oversight was addressed in the SA Direction-Setting Issue Paper Number 7 (DSI 7) (released September 16, 1996). In September 1997, the Commission issued its ''Strategic Plan,'' which stated that its goal in regulating nuclear materials safety is to ''prevent radiation-related deaths or illnesses due to civilian use of source, byproduct, and special nuclear materials' (NUREG–1614, Vol. 1, at 9).

In its Staff Requirements Memorandum (SRM)—COMSECY–96–057,'' Materials/Medical Oversight (DSI 7),'' dated March 20, 1997, the Commission stated that it supported continuation of the ongoing medical use regulatory program with improvements, decreased oversight of low-risk activities, and continued emphasis on high-risk activities. This SRM also directed the NRC staff to revise 10 CFR Part 35, associated guidance documents, and, if necessary, the Commission's 1979 ''Medical Use Policy Statement.'' The Commission SRM specifically directed the restructuring of Part 35 into a risk-informed, more performance-based regulation. In addition, the Commission expressed its support for use of the Advisory Committee on the Medical Use of Isotopes (ACMUI) and professional medical organizations and societies in the revision of Part 35 and the medical policy statement. The Commission specifically directed the NRC staff to ''consider a rulemaking process that provides more opportunity for input from potentially affected parties than is provided by the normal notice and comment rulemaking process, but would be less consumptive of resources and time than the process recently used in the development of NRC's rule on radiological criteria for license termination.''

A June 30, 1997, SRM informed the NRC staff of the Commission's approval, with comments, of the NRC staff's proposed program in SECY–97–131, Supplemental Information on SECY–97–115, ''Program for Revision of 10 CFR Part 35, 'Medical Uses of Byproduct Material,' and Associated Federal Register notice,'' dated June 20, 1997. After Commission approval of the NRC staff's program to revise Part 35 and associated guidance documents, the NRC staff initiated the rulemaking process, which includes revision of the Medical Use Policy Statement, as necessary (62 FR 42219). The Commission directed the NRC staff to consider certain issues, including recommendations on revising the policy statement by focusing regulation of medical use on those procedures that are essential to patient safety and that pose the highest risk, developing regulatory oversight alternatives for diagnostic procedures that are consistent with the lower overall risk of these procedures, and considering the viability of using or referencing available industry guidance and standards to the extent that they meet NRC needs (62 FR at 42219). This notice solicited informal and formal public input during the rulemaking process on the development of proposed rule language and associated documents (62 FR at 42219–4220). At various stages in this process, the Working/Steering Group placed options for a revised Medical Use Policy Statement and major issues associated with 10 CFR Part 35, and a strawman draft of the proposed rule language on the Internet.

In developing a proposed revision of the policy statement, the Commission also has had the benefit of input from the Working/Steering Group, which met publicly in August, September, and December 1997 and in January, February, and March 1998; the ACMUI, at its meetings on September 25–26, 1997, and March 1–2, 1998; ACMUI subcommittee meetings in February 1998; ''stakeholders'' and members of the public at facilitated workshops in October and November 1997; professional medical organization meetings; and State regulators at a publicly noticed workshop at the October 1997, ''All Agreement States'' [1] Meeting. State participants have included representatives of the Organization of Agreement States and the Conference of Radiation Control Program Directors. State participation in this process is intended to further the Commission's strategy to ''work with the Agreement States to assure consistent protection of public health and safety nationwide'' (NUREG–1614, Vol. 1, at 11). Such State involvement also enhances development of corresponding rules in State regulations; provides an opportunity for early State input; and allows State staff to assess potential impacts of NRC draft language on the regulation of non-Atomic Energy Act materials used in medical diagnosis, treatment, or research in the States.

At these meetings and workshops, the NRC staff presented alternatives and/or draft text for the Medical Use Policy Statement and 10 CFR Part 35. Alternatives generated by workshop participants were also discussed. To ensure that all interests were represented, to the degree possible, invited workshop participants included radiation oncologists, nuclear medicine physicians, other physician specialists (*i.e.*, clinical endocrinologists and cardiologists), radiopharmacists, medical physicists, educators, patient rights advocates, oncology nurses, radiation safety officers, medical technologists, hospital administrators, State and Federal Government officials, and radiopharmaceutical manufacturers. Policy statement alternatives ranged from retaining the status quo to various modifications of the current medical policy such as statements limiting NRC's role in the regulation of medical use to ensuring that the physician's prescription is accurately delivered to the correct patient; making clear that NRC will *not* intrude into medical judgments affecting patients; and providing for NRC assessment of risks to the radiation safety of patients that would reference comparable risks, standards, and modes of regulations for other types of medical practice.

The normal pattern for NRC policy statement proposals is the development of a proposed policy statement by the NRC staff for Commission consideration, publication of the proposed statement for public comment, consideration of the comments by the NRC staff, and preparation of a final statement, as appropriate, for Commission approval. As directed and approved by the Commission, the NRC staff has increased participation in the early stages of this development process through meetings and workshops for affected interests and by making documents available on the Internet.

The meetings and workshops elicited informed discussions of options and approaches for developing a revised Medical Use Policy Statement, and the rationale for such options and approaches. Although these meetings and workshops were not designed to seek ''consensus'' in the sense that there is agreement on how each issue should be resolved, they were conducted at a very early stage of proposed policy statement development to increase participation of interested parties and the public with the following objectives:

(a) To ensure that the relevant issues have been identified;

(b) To exchange information on these issues; and

(c) To identify underlying concerns and areas of disagreement, and, where possible, approaches for resolution.

The Commission hopes that the interactions among the participants in the meetings and workshops also fostered a clearer mutual understanding of the positions and concerns of all participants. Comments made at these workshops and meetings, and related written and electronic comments (as summarized below), were considered by the NRC staff in its preparation of a staff draft proposed policy statement, as described in the paragraphs below. Comments were also used, as

[1] An Agreement State is a State that has signed an agreement with NRC, pursuant to Section 274 of the Atomic Energy Act, allowing the State to regulate the use of radioactive material, other than use in reactor facilities, within the State. During the next 5 years, the total number of Agreement States may increase from 30 to 33. NRC ''Strategic Plan'' (Fiscal year 1997–Fiscal year 2002), NUREG–1614, Vol. 1 (September 1997), at 9.

appropriate, in developing proposed revisions of 10 CFR Part 35. The intent of an informal comment period, in advance of publishing a proposed policy statement in the **Federal Register**, was to provide an opportunity for interested parties to provide input during the development of the draft proposed medical policy statement.

ACMUI

At the ACMUI meetings referenced above, the ACMUI recommended to the NRC staff its versions of a revised medical policy statement. At its meeting in March 1998, a four-part revision of the current policy statement was recommended: the more technically accurate term ''radionuclides'' in Statement 1 is substituted for ''radioisotopes''; the order of Statements 2 and 3 is reversed; former Statement 3 (Statement 2 in the ACMUI version) is revised to make it clear that NRC ''will not intrude into the medical judgments affecting patients'' (rather than the current policy of minimizing such intrusions) and to drop from that statement the phrase ''into other areas traditionally considered to be a part of the practice of medicine''; and to modify Statement 3 primarily to provide that an assessment of risks justifying NRC medical use regulations will reference comparable risks, comparable voluntary standards, and modes of regulation for other types of medical practice.

''All Agreement States'' Meeting Workshop

This workshop, which included State participants in the meeting as well as members of the public, also discussed the issues associated with the revision of 10 CFR Part 35 and the Medical Use Policy Statement. Some participants at the workshop stated that NRC's regulatory framework had been, and in the future could be, properly developed under the existing policy statement. Those participants who found fault with the existing medical regulatory framework did so primarily on the basis that it is too prescriptive and intrudes into the practice of medicine, which they asserted is adequately regulated by existing medical practices, including voluntary standards, within the medical community. Many comments were made about the proposal for a revised policy statement under which NRC assessment of the risks justifying its regulations would reference comparable risks and comparable modes of regulation for other types of medical practice. Some participants questioned the capability of NRC to evaluate those risks and noted that such an evaluation would require some mechanism for judging appropriate risk.

Participants favoring a policy statement limiting NRC's role to ensuring the accurate delivery of the physician's prescription did so mainly on the basis that the statement specified those areas NRC would regulate and that it provided a regulatory role for NRC that would not intrude into the practice of medicine. Several participants drafted an alternative option in addition to those alternatives presented by the Working Group. That alternative primarily modified Statements 2 and 3 of the current policy statement to provide that NRC's role in regulating the radiation safety of patients is to ensure that the physician's prescription is accurately delivered to the correct patient, more strongly state NRC's policy not to intrude into medical judgments affecting patients and into other areas traditionally considered to be part of the practice of medicine, and commit NRC to regulate the radiation safety of patients only where justified by the risk to patients and only where voluntary standards or compliance with such standards are inadequate. Although no clear preference was evident, some States indicated their preference for certain alternatives.

Facilitated Public Workshops

The facilitated workshops considered alternatives for the Medical Use Policy Statement presented by the Working Group, as well as alternatives generated by the workshop participants (which were mainly modeled on the ACMUI or Agreement State recommended statements described above). Certain themes emerged in these workshop discussions, such as ensuring that NRC follows the policy statement in the future, does not interfere in the practice of medicine or medical judgments affecting patients, regulates medical use of byproduct material based on the risk posed by the medical use and only after determining that voluntary medical practice standards are inadequate, and limits its role in regulating the radiation safety of patients to ensuring that the physician's prescription is followed. At the Philadelphia workshop, an alternative with this latter limitation generated the most favorable comments.

Some participants expressed the view that the objectives described above could be achieved by revisions to the current statement, whereas others asserted that mechanisms such as tort law or ''physician practice review procedures'' could substitute for NRC regulatory control in certain areas. On the other hand, participants expressed concern that certain policy statement alternatives could so limit NRC's role that its regulation would not encompass either high-risk diagnostic or ''emerging'' medical use technologies. Another concern was that NRC regulation of only the administration of the byproduct material would not provide an adequate level of protection to the patient.

According to certain participants, there is an absence of data supporting the necessity of NRC regulation to ensure that the correct patient receives the correct dose. In view of the perception that NRC is not qualified to assess the risks associated with medical practice, the workshop participants voted in favor of a policy statement providing that in any assessment of such risks, NRC, as a matter of policy, will rely on the determinations of the ACMUI and representatives of major professional medical organizations and Government agencies (to include stakeholder participation). Supporters of this statement pointed out that one of its advantages is that it would provide for stakeholder participation in risk assessment decisions. However, other participants expressed concern that certain professional organizations might not necessarily have the best interests of patients in mind when developing a risk assessment.

Overview of Written and Electronic Comments

The Commission also received written comments in response to the above notice, some of which addressed the Commission's Medical Use Policy Statement. Commenters on the policy statement include a State, professional medical organizations, an industry trade group, universities, and members of the public. The Commission has provided an overview of comments below.

An Agreement State recommended that the Commission continue the status quo with respect to the Medical Use Policy Statement, but more strictly adhere to that policy. According to that State, any intrusion into medical judgments affecting patients should be based solely on radiation protection considerations.

A number of professional societies, *e.g.*, the American Brachytherapy Society (ABS), the Society of Nuclear Medicine/American College of Nuclear Physicians (SNM/ACNP), and the American Association of Physicists in Medicine (AAPM) also provided comments on the Medical Use Policy Statement. ABS agrees with current Medical Use Policy Statements 1 and 3, but believes that Statement 3 needs revision to provide that NRC will regulate the radiation safety of patients

only where justified by the risk to patients and only where voluntary standards or compliance with these standards are inadequate. According to ABS, Statement 2 should also make clear that ''[t]he risk threshold justifying patient safety risks will be comparable to those of other types of medical practice.'' ABS believes that the NRC concept of acceptable patient risk is zero.

The SNM/ACNP asserts that contrary to the clear language in the current policy statement, NRC has steadily increased its involvement in the regulation of nuclear medicine despite minimal changes in this area of medicine over the years and a lack of significant problems with this medical modality. The AAPM supports NRC's efforts to revise the Medical Use Policy Statement to focus on radiation safety and not on the practice of medicine or medical physics. However, the AAPM urged NRC to publish its risk data so that the regulated community can understand the NRC's actions in regulating the medical uses of radiation. AAPM supports the concept of risk-based regulations, although noting that the licensees' response to regulatory actions will require the expenditure of health care funds.

A university of health sciences commented that NRC's current Medical Use Policy Statement is appropriate. This commenter believes that NRC should continue to regulate medical use to provide for the radiation safety of workers, patients, and the general public and that there is no need for changes to the particular statement of general policy. Another university's comments were very similar to those of the AAPM, described above.

Comments were also submitted on behalf of the Council on Radionuclides and Radiopharmaceuticals, Inc. (CORAR). According to CORAR, any revision of the Medical Use Policy Statement is futile unless NRC takes direction from that statement. As to the first statement of the medical policy, CORAR believes that 10 CFR Part 35 is unnecessary because 10 CFR Part 20 is adequate for regulation of all other uses of radioactive material and could be expanded to ensure the safety of medical use. CORAR commented on the second and third statements of medical policy by asserting that regulation of the radiation safety of patients is neither justified nor inadequate. In support of this contention, CORAR cited several factors, including regulation by other bodies such as the Food and Drug Administration and State Boards of Medicine, the responsibility of physicians to adhere to standards and codes of medical practice, and the exemplary performance record of nuclear medicine. CORAR concludes that the current medical policy statement provides argument against perceived prescriptive regulation.

One member of the public questioned what constitutes ''other areas traditionally considered to be part of the practice of medicine,'' within the meaning of the policy statement. This commenter agreed that although the ACMUI should be the primary source of ''risk judgments,'' it can't be the only source of such judgments, and consideration should be given to other groups and individuals. Another member of the public commented that the policy statement should not limit NRC's role to protection of workers and the general public. This commenter stated that the policy statement assumes there is some entity to ensure that clinical nuclear medicine physicians are qualified to protect those groups. According to the commenter, it is of considerable concern that the policy statement does not account for the fact that many private practice offices and outpatient centers are not components of hospitals.

Although the Commission has considered all of the comments provided, it is specifically responding to comments that raised major issues associated with revision of the Medical Use Policy Statement. At the outset, the Commission notes that its nationwide ''performance goals'' for measuring results toward meeting NRC's nuclear materials safety goal include ''[z]ero radiation-related deaths due to civilian use of source, byproduct, and special nuclear materials'' and for ''no increase in the number of misadministration events which cause significant radiation exposures'' (NUREG–1614, Vol. 1, at 9–10).[2] In response to comments, the Commission is proposing revisions of its policy statement (see Section IV., below) that make clear its intent to avoid intrusion into medical judgments affecting patients, rather than the current policy of minimizing such intrusions. The Commission rejects regulation of the medical use of byproduct material on the basis of ''comparable risk,'' as the ACMUI and ABS have proposed. The Commission doubts that such an approach would meet the statutory standard in Section 161b. of the Atomic Energy Act of 1954, as amended (AEA), to regulate all uses of byproduct material ''to protect health and minimize danger to life.'' The Commission (as well as others, such as NAS and the ACMUI) has recognized the lack of acceptable data to compare the risks from medical use of byproduct material with risks in other medical modalities. In the absence of acceptable data, regulation on the basis of ''comparable risk'' would be regulation to an inadequately understood level of risk. In addition, there is not an expressed authorization in the AEA to regulate any use of byproduct material on the basis of an insufficiently known ''comparable risk.'' Without acceptable data or an express statutory authorization, justifying the significant departure from the Commission's established policy with respect to risk to patients would be, at a minimum, problematic.

[2] The Commission is proposing to amend its regulations to substitute the term ''medical event'' for ''misadministration.'' However, in historical discussions, the term ''misadministration'' is still used.

II. Rationale

NRC's principal statutory authority for regulating medical use of byproduct material rests on sections 81, 161, 182, and 183 of the AEA. See 42 U.S.C. 2111, 2201, 2232, and 2233. Section 81 of the Act prohibits, without NRC authorization, the manufacture, production, transfer, receipt in interstate commerce, acquisition, ownership, possession, import, and export of byproduct material (42 U.S.C. 2111).

Section 81 of the AEA directs that:

> The Commission shall not permit the distribution of any byproduct material to any licensee, and shall recall or order the recall of any distributed material from any licensee, who is not equipped to observe or who fails to observe such safety standards to protect health as may be established by the Commission or who uses such material in violation of law or regulation of the Commission or in a manner other than as disclosed in the application therefor or approved by the Commission.

Id. (emphasis added).

By virtue of section 161 of the Act, the Commission is authorized to undertake a variety of measures ''[in] the performance of its functions'' (42 U.S.C. § 2201). As stated in subsection b, the Commission may ''establish by rule, regulation, or order, such standards and instructions to govern the possession and use of special nuclear material, source material, and byproduct material as the Commission may deem necessary or desirable * * * *to protect health or to minimize danger to life* or property'' [42 U.S.C. § 2201(b) (emphasis added)]. Similarly, section 161i. authorizes the Commission to ''prescribe such regulations or orders as it may deem necessary'' to ''(3) govern any activity authorized pursuant to this Act, including standards and restrictions governing the design, location, and

operation of facilities used in the conduct of such activities, in order *to protect health and minimize danger to life* or property'' [42 U.S.C. § 2201(I) (emphasis added)].

The Commission is bound by statute to regulate byproduct material (as well as source and special nuclear material) to ''protect health and minimize danger to life.'' This statutory standard applies to the myriad of uses of byproduct material, including, not only medical use, but also, for example, radiography and irradiators. However, the Commission is not bound by the limitation in section 104a, of the AEA, which is often mistakenly cited for the proposition that, in regulating medical use of byproduct material, the AEA requires that the Commission ''impose the minimum amount of regulation consistent with its obligations under this Act to promote the common defense and security and to protect health and safety of the public'' [(42 U.S.C § 2134(a)]. This ''minimum regulation'' limitation does not apply to the medical use of byproduct material which falls within NRC's broad standard-setting authority in sections 81 and 161. Section 104a, on its face, applies only to medical therapy licenses for ''utilization facilities'' (*e.g.*, reactors) and ''special nuclear material.'' This ''minimum regulation'' directive does not govern the Commission's regulation of the medical use of byproduct material.

For the most part, the regulations to carry out the broad statutory scheme for byproduct materials are set forth in 10 CFR Parts 30 through 36. In addition, the public and occupational dose limits in 10 CFR Part 20, ''Standards for Protection Against Radiation,'' apply whether the use of byproduct material is for medical or other purposes. However, the scope of Part 20 in § 20.1002 states that, ''[t]he limits in this part do not apply to doses due * * * to any medical administration the individual has received or due to voluntary participation in medical research programs.'' The Commission has clarified that ''the medical administration of radiation or radioactive materials to any individual, even an individual not supposed to receive a medical administration, is regulated by the NRC's provisions governing the medical use of byproduct material rather than by the dose limits in the NRC's regulations concerning standards for protection against radiation'' (''Medical Administration of Radiation and Radioactive Materials,'' 60 FR 48623; September 20, 1995). Thus, the Commission believes that ''an administration to any individual is and should be subject to the regulations in Part 35'' (60 FR 48623).

The provisions of Part 30, ''Rules of General Applicability to Domestic Licensing of Byproduct Material'' ''are in addition to * * * other requirements in this chapter'' (Section 30.2). This section requires that ''any conflict between the general requirements in Part 30 and the specific requirements in another part'' are governed by those specific requirements (Section 30.2). The regulations in Part 35 that are designed ''to provide for the protection of the public health and safety'' reflect the broad statutory standard in the AEA, discussed above (Section 35.1). The Commission has determined that, as a matter of policy, ''the patient * * * as well as the general public * * * are all members of the public to be protected by NRC'' (44 FR 8242, at 8244). (See discussion following.)

The NRC and the Food and Drug Administration (FDA) have regulatory responsibilities concerning medical devices, drugs, and biological products utilizing byproduct, source, and special nuclear material. NRC has responsibility, as described above, for regulating the actual medical use of byproduct material from the standpoint of reducing unnecessary radiation exposures to the public, patients, and occupational workers. In general, the FDA is responsible for assuring the safety, effectiveness, and proper labeling of medical products, *i.e.*, drugs, devices, and biologics. NRC routinely relies on prior FDA approval of medical devices as an essential component of NRC's sealed source and device safety evaluations. In a ''Memorandum of Understanding'' (MOU), effective August 26, 1993, NRC and FDA coordinated existing NRC and FDA regulatory programs for these devices, drugs, and products (58 FR 47300; September 8, 1993). These regulatory programs include activities for evaluating and authorizing the manufacture, sale, distribution, licensing, and labeled intended use of these products. The specific ''elements of coordination'' cover notification of product complaints, medical events, and emergency situations; coordination of investigations; investigation information exchange; NRC and Agreement State notifications; product pre-marketing and pre-licensing information exchange, and sharing of other information such as special notifications to manufacturers, operators, licensees, or patients (58 FR at 47302).

III. The Proposed Commission Policy

Based on the comments and advice of all the participants in the process described previously, as well as members of the public on the ''Internet'' (via the NRC ''s Technical Conference Forum), the Commission is proposing the following as a revised Medical Use Policy Statement to guide its future regulation of the medical use of byproduct material:

1. NRC will continue to regulate the uses of radionuclides in medicine as necessary to provide for the radiation safety of workers and the general public.
2. NRC will not intrude into medical judgments affecting patients, except as necessary to provide for the radiation safety of workers and the general public.
3. NRC will, when justified by the risk to patients, regulate the radiation safety of patients primarily to assure the use of radionuclides is in accordance with the physician's directions.
4. NRC, in developing a specific regulatory approach, will consider industry and professional standards that define acceptable approaches of achieving radiation safety.

Statement 1

The first portion of the proposed policy statement restates the first part of the current policy statement with the substitution of the phrase ''uses of radionuclides in medicine'' for the phrase ''medical uses of radioisotopes.'' As rephrased, this is a more accurate technical statement of the scope of NRC regulation in this area. Statement 1 conveys the traditional regulatory function of NRC for all uses of byproduct, source, and special nuclear material. Protection of the radiation safety of members of the public and workers is central to fulfillment of the Commission's statutory mandate to ''protect health and minimize danger to life.'' This protection is provided for, in part, in the public and occupational dose limits in 10 CFR Part 20 cited previously. Those limits apply whether the use of byproduct material is for medical use or other purposes. The Commission has determined to retain its long-standing regulatory framework as necessary in the medical uses of byproduct material. As stated in the **Federal Register** notice initiating the Commission's request for public comment, the Commission ''was not persuaded by the National Academy of Sciences (NAS), Institute of Medicine (IOM) report that recommends that the NRC should not be the Federal agency involved in the regulation of ionizing radiation in medicine'' [62 FR at 42219 (quoting SRM of March 20, 1997)].

Statement 2

The second portion of the proposed policy statement is based on the third part of the current statement. The modifications explicitly state the Commission's proposed policy not to intrude into medical judgments affecting patients except to provide for the radiation safety of workers and the general public. Given the significance of this change, the Commission is soliciting specific public comment on whether the wording in the current statement should be revised to read ''not intrude into medical judgments,'' rather than ''to minimize intrusion into medical judgments.'' These comments will be especially useful in evaluating the consistency between the proposed MPS and the Commission's preliminary intent to continue to require patient notification following medical events (the proposed revision to 10 CFR Part 35 would replace the term ''misadministration'' with ''medical event''). Specifically, some would argue that continued regulatory requirements for patient notification would be inconsistent with the proposed revision to Statement 2 of the MPS. Others would argue that notification requirements would be consistent with Statement 3 of the proposed policy statement since a medical event represents a situation where the physician's directions for the administration of byproduct material were not followed and, thus, patient notification should be made.

As set forth above, providing for the radiation safety of the public and workers is essential for the Commission to carry out its statutory mandate. When this protection necessitates a degree of regulation of medical judgments affecting patients, the Commission may find it necessary to intrude, to a certain extent, into medical judgments to protect the public and workers. For example, release of patients administered radioactive materials has long been considered a matter of regulatory concern to protect members of the public, not just a matter of medical judgment (''Criteria for the Release of Individuals Administered Radioactive Material,'' 62 FR 4120; January 29, 1997). Thus, from a strictly medical point of view, it may be appropriate for a physician to release a patient administered radioactive materials from the hospital. However, patient release criteria in NRC regulations (10 CFR 35.75) may require confinement of that patient if release of that patient could result in a dose to other individuals that exceeds the dose-based limit stated in 10 CFR 35.75(a).

In the current policy statement, the Commission stated its intent to ''minimize intrusions into medical judgments affecting patients and into other areas traditionally considered to be part of the practice of medicine.'' The modifications in this part of the proposed policy statement more strongly reflect the Commission's long-standing recognition that physicians have the primary responsibility for the diagnosis and treatment of their patients. NRC regulations are predicated on the assumption that properly trained and adequately informed physicians will make decisions that are in the best interests of their patients. Therefore, in recent years, the Commission has moved away from a more rigid scheme of medical use regulation, which at one time, for example, restricted the uses of therapeutic and certain diagnostic radioactive drugs to the indicated procedures that had been approved by the FDA (44 FR 8242, at 8243).

NRC regulations no longer prohibit authorized user physicians from using diagnostic or therapeutic radioactive drugs containing byproduct material for indications or methods of administration not listed in the FDA-approved package insert. Further, NRC regulations now permit medical use licensees and commercial nuclear pharmacies to depart from the manufacturer's instructions for preparing radioactive drugs using radionuclide generators and reagent kits. In addition, the recent amendment of 10 CFR 35.75, cited above, substituting a dose-based limit for patient release (rather than an activity-based limit), may provide medical use licensees greater flexibility in determining when such patients may be released from their control.

The Commission's proposed policy to avoid (rather than minimize) intrusion into medical judgments affecting patients is consistent with recent Federal legislation (specifically applicable to FDA), which is to be construed so as not to ''limit or interfere with the authority of a health care practitioner to prescribe or administer any legally marketed device to a patient for any condition or disease within a legitimate health care practitioner-patient relationship.'' (There are certain exceptions to this mandate, which do not change any existing prohibition on the promotion of unapproved uses of legally marketed devices.) ''Food and Drug Administration Modernization Act of 1997,'' Pub. L. No. 105–115, § 906, 111 Stat. 2296 (1997).

Statement 3

Neither the AEA sections cited above nor the regulations in 10 CFR Part 35 use the term ''risk.'' The Commission's current policy statement on medical use, quoted above, makes specific reference to ''risk'' to patients. As there stated and reaffirmed here, the Commission specifically rejects the notion that it should not regulate patient radiation safety (44 FR at 8243). The Commission will continue to regulate radiation safety of patients where justified by the risk to patients. However, proposed Statement 3 makes clear that the focus of NRC regulation to protect the patient's health and safety is primarily to ensure that the authorized user physician's directions are followed. The NRC goal in this aspect of medical use regulation is tied to the physician's directions as they pertain to the application of the radiation or radionuclide, rather than to other, non-radiation related aspects of the administration. Consistent with the Commission's statutory authority, if a situation should arise in the future which identifies an additional risk to the patient's health and safety, the Commission will consider adopting an additional limitation or control on a particular radiation or radionuclide modality as necessary. ''Prescription'' is not being used for this purpose because it might typically include aspects of the administration that are outside NRC's purview. Either the ''written directive'' or ''clinical procedures manual'' (as those terms are defined in Part 35) would contain the physician's directions (*i.e.,* the procedure to be performed and the dose) . This regulatory objective is currently reflected in certain provisions of Part 35 (*e.g.,* 10 CFR 35.32(a) (requiring ''high confidence'' that byproduct material or radiation therefrom will be administered as directed by an authorized user physician) and as part of the rationale of the current policy statement. In the proposed revision of 10 CFR Part 35 and as explicitly stated above, NRC is emphasizing that protection of patient radiation safety is an overall NRC goal in regulating the medical use of byproduct material. Although the Commission recognizes that physicians have primary responsibility for the protection of their patients, NRC has a secondary, but necessary, role with respect to the radiation safety of patients.

The Commission is attempting to make its medical use regulatory framework more ''risk-informed,'' based on its regulatory strategy of regulating ''material uses consistent with the level

of risk involved, by decreasing oversight of those materials that pose the lowest radiological risk to the public and continuing emphasis on high-risk activities' (NUREG–1614, Vol. 1, at 11). In addition, this portion of the proposed policy statement reflects the Commission strategy of identifying those regulations and processes that are now or can be made risk-informed (NUREG–1614, Vol. 1, at 11. SRM of March 20, 1997, at 2).

Statement 4

According to Statement 2 of the current policy statement, NRC will regulate the radiation safety of patients where justified by the risk to patients and where voluntary standards, or compliance with these standards, are inadequate. In its SRM of March 20, 1997, the Commission repeated its continued support of professional medical organizations and societies (as well as the ACMUI) in developing regulatory guides and standards (SRM, at 1). Proposed Statement 4 commits NRC to an approach for regulation of medical use which ''will consider industry *and* professional standards that define acceptable levels of achieving radiation safety.'' Such consideration, however, does not involve, as a prerequisite for regulation, the problematic determination of licensee compliance with a voluntary standard (as implied in current Statement 2). At a minimum, such an undertaking leaves NRC with the dilemma of how to deal with licensees that may not comply with voluntary standards. For this reason, the Commission's proposed policy statement does not retain that aspect of the current policy statement.

The Statement of Consideration for the proposed 10 CFR Part 35 rulemakings specifically addresses NRC's current policy of consideration of ''voluntary standards and compliance with such standards.'' Affirming consideration of industry and professional standards as part of the NRC policy in achieving radiation safety in medical use conforms to the Commission's Strategic Plan. The relevant strategy there stated is to increase the involvement of licensees and others in the NRC regulatory development process, based on the concepts in the ''National Technology Transfer and Advancement Act of 1995'' (the NTTAA), Pub. L. No. 104–113, 110 Stat. 775 (1995). Section 12(d) of the NTTAA requires ''all Federal agencies and departments to use technical standards that are developed or adopted by voluntary consensus bodies * * * as a means to carry out policy objectives or activities,'' except when use of such standards ''is inconsistent with applicable law or otherwise impractical.''

It is not clear that all ''medical industry and professional standards'' would meet the definition of ''technical standards'' in Section 12(d)(4) of the NTTAA (''performance-based or design-specific technical specifications and related management systems practices).'' Nevertheless, as indicated above, the Commission endorses, in regulating medical use of byproduct material, the concept in Section 12(a) of the NTTAA, of ''emphasizing, where possible, the use of standards developed by private, consensus organizations.'' As also stated in the Strategic Plan, the Commission encourages ''industry to develop codes, standards, and guides that can be endorsed by the NRC and carried out by industry.''

IV. Policy Implications

This proposed policy statement affirms the Commission determination that it shall continue its role in regulating the medical use of byproduct material, but with emphasis on the goal of protecting the radiation safety of occupational workers, the public, and patients, while avoiding intrusion into medical judgments affecting patients. Ensuring that the authorized user physician's directions for the administration of byproduct material are followed is the primary means of achieving this regulatory goal. Moreover, the Commission is renewing the objective of utilizing industry and professional standards that define acceptable levels of achieving radiation safety.

Reference Information

1. Strategic Assessment Direction-Setting Issues Paper Number 7 is available by writing to the U.S. Nuclear Regulatory Commission, Attention: NRC Public Document Room, Washington, DC 20555–0001, telephone: (202) 634–3273; fax: (202) 634–3343.

2. The memorandum ''Management Review of Existing Medical Use Regulatory Program (COMIS–92–026)'' (dated June 16, 1993) is available by writing to the U.S. Nuclear Regulatory Commission, Attention: NRC Public Document Room, Washington, DC 20555–0001, telephone: (202) 634–3273; fax: (202) 634–3343.

3. ''Radiation in Medicine: A Need for Regulatory Reform'' (1996) is available from the National Academy Press at 2101 Constitution Avenue, NW, Box 285, Washington, DC 20555.

4. Summary minutes and transcripts of the ACMUI March 1998 meeting or transcripts of the May 8, 1997, Commission briefing are available by writing to the U.S. Nuclear Regulatory Commission, Attention: NRC Public Document Room, Washington, DC 20555–0001, telephone: (202) 634–3273; fax: (202) 634–3343. Transcripts of the May 8, 1997, briefing are also available by Internet at http://www.nrc.gov.

5. The NRC Medical Policy Act Statement of 1979 was published in the **Federal Register**, Volume 44, page 8242, on February 9, 1979.

6. SECY–97–115, Program for Revision of 10 CFR Part 35, ''Medical Uses of Byproduct Material'' and Associated Federal Register notice; SECY–97–131, Supplemental Information on SECY–97–131, Supplemental Information on SECY–97–115, ''Program for Revision of 10 CFR Part 35, ''Medical Uses of Byproduct Material,'' and Associated Federal Register notice; and the associated SRM (dated June 30, 1997) are available by writing to the U.S. Nuclear Regulatory Commission, Attention: NRC Public Document Room, Washington, DC 20555–0001, telephone: (202) 634–3273; fax: (202) 634–3343. Copies are also available on the NRC Technical Conference Forum at http://techconf.llnl.gov/noframe.html.

Dated at Rockville, Maryland, this 5th day of August, 1998.

For the Nuclear Regulatory Commission.

John C. Hoyle,

Secretary of the Commission.

[FR Doc. 98–21460 Filed 8–12–98; 8:45 am]

BILLING CODE 7590–01–P

federal register

Thursday
August 13, 1998

Part IV

Environmental Protection Agency

Project XL Final Project Agreement for Molex Inc., and Response to Comments on Withdrawn Direct Final Rule for Project XL Lincoln, NE; Availability of Massachusetts Environmental Results Program Project XL Draft Umbrella Final Project Agreement; Notices

ENVIRONMENTAL PROTECTION AGENCY

[FRL–6143–2]

Project XL Final Project Agreement for Molex Inc, 700 Kingbird Road Facility, Lincoln, Nebraska

AGENCY: Environmental Protection Agency.

ACTION: Notice of Project XL Final Project Agreement.

SUMMARY: The EPA is implementing a project under the Project XL program for the Molex, Inc. (Molex) facility located at 700 Kingbird Road, Lincoln, NE. The terms of the project are defined in a Final Project Agreement (FPA) which is being made available in its final form today by this document. Also, with this document, EPA is notifying the public for informational purposes that the Nebraska Department of Environmental Quality intends to sign a temporary variance necessary for implementation of the project. A draft project agreement and proposed site specific rule were published in the **Federal Register** on November 3, 1997 (FRL–5916–3; 62 FR 59287). EPA received adverse comments. As a result of the comments, EPA decided to withdraw the site specific rule and proceed under the authority of the Nebraska RCRA program. The Withdrawal of the Direct Final rule was published in the **Federal Register** on December 30, 1997 (FRL 5942–5; 62 FR 67736). A summary of the comments and the changes to the Project that EPA undertook as a result of receiving the comments is included in the Rules and Regulations Section of today's **Federal Register**.

The Molex Project XL provides flexibility to the facility in managing their waste sludges. The facility has decided to segregate waste streams which had previously been co-mingled into a single waste stream. By changing the process lines to generate separate waste streams (nickel, copper, tin/lead), the facility can optimize the precipitation of each metal more effectively before the effluent is sent to the Publicly Owned Treatment Works (POTW).

The environmental benefit results in a substantial reduction in the mass loading of metals entering the City of Lincoln's POTW. In addition, the resultant mono-metal sludges will be commodity-like materials suitable for recycling by reclaimers. A secondary environmental benefit will be an increase in recycling and a reduction in the amount of material that would otherwise be landfilled. The Nebraska Department of Environmental Quality is giving Molex a temporary variance from classifying as solid waste nickel, copper, and tin/lead non-precious metals containing sludges.

DATES: The actions are effective August 13, 1998. Additional information is provided in the section entitled **ADDRESSES.**

ADDRESSES: The complete administrative record is maintained at EPA Region VII. Questions and comments should be submitted to: Mr. David Doyle, U.S. Environmental Protection Agency, Region VII, Air, RCRA & Toxics Division, 726 Minnesota Avenue, Kansas City, KS 66101, (913) 551–7667.

Docket. A docket containing supporting information used in developing this final rulemaking is available at U.S. EPA Headquarters US EPA, 401 M Street SW (1802), Washington, DC 20460, (202) 260–7434; or EPA Region VII, Air, RCRA & Toxics Division, 726 Minnesota Avenue, Kansas City, KS 66101, (913) 551–7667. File information is available from the Nebraska Department of Environmental Quality, Lincoln, NE, (402) 471–4217.

FOR FURTHER INFORMATION CONTACT: Mr. David Doyle, U.S. Environmental Protection Agency, Region VII, Air, RCRA & Toxics Division, 726 Minnesota Avenue, Kansas City, KS 66101, (913) 551–7667.

SUPPLEMENTARY INFORMATION:

Outline of This Document

I. Background
  A. Overview of Project XL
  B. Overview of the Molex XL Project
II. Summary of Final Project Agreement
III. Summary of state-issued Variance

I. Background

A. Overview of Project XL

Project XL—for ''eXcellence and Leadership''—was announced on March 16, 1995, as a central part of the National Performance Review's and EPA's effort to reinvent environmental protection. See 60 FR 27282 (May 23, 1995). In addition, on April 22, 1997, EPA modified its guidance on Project XL, solicited new XL proposals, clarified EPA definitions, and described changes intended to bring greater efficiency to the process of developing XL projects. See 62 FR 19872 (April 22, 1997). Project XL provides a limited number of private and public regulated entities an opportunity to develop their own pilot projects to provide regulatory flexibility that will result in environmental protection that is superior to what would be achieved through compliance with current and reasonably anticipated future regulations. These efforts are crucial to the Agency's ability to test new regulatory strategies that reduce regulatory burden and promote economic growth while achieving better environmental and public health protection. The Agency intends to evaluate the results of this and other Project XL projects to determine which specific elements of the project, if any, should be more broadly applied to other regulated entities to the benefit of both the economy and the environment.

In Project XL, participants in four categories—facilities, industry sectors, governmental agencies and communities—are offered the flexibility to develop common sense, cost-effective strategies that will replace or modify specific regulatory requirements, on the condition that they produce and demonstrate superior environmental performance. To participate in Project XL, applicants must develop alternative pollution reduction strategies pursuant to eight criteria—superior environmental performance; cost savings and paperwork reduction; local stakeholder involvement and support; test of an innovative strategy; transferability; feasibility; identification of monitoring, reporting and evaluation methods; and avoidance of shifting risk burden. They must have full support of affected Federal, state and tribal agencies to be selected. The XL program is intended to allow EPA to experiment with untried, potentially promising regulatory approaches, both to assess whether they provide benefits at the specific facility affected, and whether they should be considered for wider application. Such pilot projects allow EPA to proceed more quickly than would be required to undertake changes on a nationwide basis. As part of this experimentation, EPA may try out approaches or legal interpretations that depart from or are even inconsistent with longstanding Agency practice, so long as those interpretations are within the broad range of discretion enjoyed by the Agency in interpreting statutes that it implements. EPA may also modify rules that represent one of several possible policy approaches within a more general statutory directive, so long as the alternative being used is permissible under the statute. Adoption of such alternative approaches or interpretations in the context of a given XL project does not, however, signal EPA's willingness to adopt that interpretation as a general matter, or even in the context of other XL projects. It would be inconsistent with the forward-looking nature of these pilot projects to adopt such innovative

approaches prematurely on a widespread basis without first finding out whether or not they are viable in practice and successful in the particular projects that embody them.

Furthermore, as EPA indicated in announcing the XL program, the Agency expects to adopt only a limited number of carefully selected projects. These pilot projects are not intended to be a means for piecemeal revision of entire programs. Depending on the results in these projects, EPA may or may not be willing to consider adopting the alternative interpretation again, either generally or for other specific facilities.

EPA believes that adopting alternative policy approaches and interpretations, on a limited, site-specific basis and in connection with a carefully selected pilot project, is consistent with the expectations of Congress about EPA's role in implementing the environmental statutes (so long as the Agency acts within the discretion allowed by the statute). Congress' recognition that there is a need for experimentation and research, as well as ongoing reevaluation of environmental programs, is reflected in a variety of statutory provisions, such as sections 101(b) and 103 of the Clean Air Act. In some cases, as in this XL project, such experimentation requires an alternative regulatory approach that, while permissible under the statute, was not the one adopted by EPA historically or for general purposes.

B. Overview of Molex Project

Molex is a multinational company that operates several electroplating facilities worldwide. Molex as part of its XL proposal has upgraded its facility in Lincoln, Nebraska by changing its waste water treatment system to allow it to optimize the recovery of metals used in the electroplating processes. The primary environmental benefit will be the reduction of metals loading in the effluent discharges into the publicly owned treatment works (POTW). A secondary environmental benefit will be increased recycling and reducing the amount of material that would otherwise be disposed.

The facility generates several metals-bearing wastewater streams that formerly were brought together for combined treatment. Metals recovery in such a system is limited because each metal has its own optimal set of treatment conditions. At its new facility Molex is operating a segregated treatment system that separately treats each metal waste stream to optimize the precipitation of each metal contaminant to more effectively remove metals from the effluent to the POTW. Molex has made its investment in the system in anticipation of its participation in the XL program and the regulatory relief it will provide. At the new facility Molex changed the process lines to generate separate treatment sludges for nickel, copper, and tin/lead. The environmental benefit will be a substantial reduction in the mass loading of metals entering the City of Lincoln's POTW. In addition, the resultant mono-metal sludges are more suitable for direct recycling by reclamation facilities. However, the segregated system costs more to operate than a combined treatment system. Additionally, the segregated system will result in increased costs from compliance with the current regulations for handling the resultant sludges. Currently, Molex is handling the sludges as hazardous wastes. The regulatory flexibility provided by this project helps Molex financially justify the continued operation of the segregated system.

The NDEQ hazardous waste program has been authorized by EPA pursuant to the Resource Conservation and Recovery Act (RCRA) § 3006(b), to carry out the Nebraska program in lieu of the Federal Program. Sludges from the former combined treatment system contain copper, nickel, tin, lead, and gold. The gold content of the materials has allowed Molex to handle the combined treatment sludge as ''recyclable materials'' from which precious metals are reclaimed under Title 128, Rules and Regulations Governing Hazardous Waste Management in Nebraska, Chapter 7, Section 010.

The sludges at the new facility do not contain precious metals and therefore will not qualify as ''recyclable material'' from which precious metals are reclaimed. As such, in the absence of this proposed regulatory relief, the materials will be subject to the NDEQ Title 128 generator requirements for storage and shipment of hazardous wastes, at considerably greater expense for storage, shipment and disposal/recycling as compared to the precious metals exemption. With the proposed regulatory relief, including a variance granted by NDEQ, Molex will be allowed to handle the non-precious mono-metals sludges with substantially reduced regulatory compliance costs.

The Final Project Agreement (FPA), and the Nebraska Department of Environmental Quality temporary variance have been developed by the Molex XL stakeholder group, namely Molex, Inc. (Molex), EPA, Nebraska Department of Environmental Quality (NDEQ), Lincoln/Lancaster County Health Department and the City of Lincoln, NE. The FPA and NDEQ variance are maintained in the docket are also available on the world wide web at http://www.epa.gov/ProjectXL. The FPA outlines how the project addresses the eight Project XL criteria, in particular how the project will produce, measure, monitor, report, and demonstrate superior environmental benefits. The NDEQ temporary variance is the implementation mechanism for the project.

II. Summary of Final Project Agreement

The Project XL Final Project Agreement (FPA or Agreement) is entered into by the United States Environmental Protection Agency (EPA), the Nebraska Department of Environmental Quality (NDEQ), and Molex, Inc. (Molex). The Agreement states the intentions of the parties to undertake certain actions necessary to implement an alternative strategy for environmental compliance at the Molex electroplating facility located at 700 Kingbird Road, Lincoln, Nebraska. The FPA is intended to be a joint statement of the parties' plans and intentions with regard to the Molex, Inc. XL Project. The FPA is intended to clearly state the plans of the various participants to carry out the project. The agreement is not, however, intended to create legal rights or obligations and is not a contract, or a regulatory action such as a permit or rule, although some provisions in this Agreement will be implemented through a state variance which will be legally enforceable. This agreement does not give any of the parties a right to sue other parties for any alleged failure to implement its terms, either to compel implementation or to recover damages.

The project is an alternative environmental compliance strategy that encompasses technical changes to the facility's wastewater treatment system, environmental improvements in the effluent to the POTW, regulatory relief for the facility for storage and shipment of wastes, and documentation of the technical, environmental and economic impacts of the alternative strategy. The full and signed Final Project Agreement is available on the EPA Project XL website at http://www.epa.gov/ProjectXL. It is also on file at EPA Region VII with Mr. David Doyle, U.S. Environmental Protection Agency, Region VII, Air, RCRA & Toxics Division, 726 Minnesota Avenue, Kansas City, KS 66101, (913) 551–7667.

III. Summary of Nebraska Department of Environmental Quality Temporary Variance

The Nebraska Department of Environmental Quality is authorized to

grant a variance to Molex, Inc. pursuant to Title 128, Rules and Regulations Governing Hazardous Waste Management in Nebraska, chapter 5, section 001.04. The variance for this XL project grants a temporary exemption from the classifying as solid waste of segregated sludges generated during wastewater treatment at the Molex Upland facility located at 700 Kingbird Road, Lincoln, Nebraska. The purpose of the temporary variance is to allow Molex sufficient time to collect information to demonstrate that segregation and separate treatment of various wastestreams at its facility results in a significantly reduced metals content in its wastewater effluent discharge to the City of Lincoln's publicly owned treatment works (POTW) and produces a readily recyclable sludge with market value. The variance is necessary to remove a regulatory barrier which would otherwise classify the sludges generated from the segregation and treatment of wastewater from Molex's electroplating operation as a solid waste and a listed hazardous waste. The sludge generated from wastewater treatment at the Molex facility, prior to the implementation of process changes to segregate and separately treat wastestreams, was considered a recyclable material utilized for precious metals recovery subject to reduced management requirements under title 128, chapter 7, section 010. The Director of NDEQ has investigated the claims made by the applicant and the interests of others likely to be affected and the general public and has decided to proceed with the temporary variance which is posted on the Project XL website at http://www.epa.gov/ProjectXL. It is also available from the Nebraska Department of Environmental Quality, 1200 N Street, Suite 400, Lincoln, Nebraska 68509, (402) 471–2186.

Dated: August 6, 1998.

Lisa Lund,

Deputy Associate Administrator, Office of Reinvention Programs, Office of Reinvention.

[FR Doc. 98–21672 Filed 8–12–98; 8:45 am]

BILLING CODE 6560–50–P

ENVIRONMENTAL PROTECTION AGENCY

[FRL–6143–4]

Project XL Response to Comments on Withdrawn Direct Final Rule for Project XL for Molex, Inc., 700 Kingbird Road Facility, Lincoln, Nebraska

AGENCY: Environmental Protection Agency.

ACTION: Response to Comments.

SUMMARY: The EPA is implementing a project under the Project XL program for the Molex, Inc. (Molex) facility located at 700 Kingbird Road, Lincoln, NE. On November 3, 1997 EPA published a draft project agreement and proposed site specific rule (FRL 5916–3, 62 FR 59287) for this project. EPA received adverse comment. This notice today summarizes the comments on the Direct Final Rule and the follow up actions taken on this project as a result of the comments. Also published in today's **Federal Register** is a notification of the Final Project Agreement and the State-issued temporary variance. That notice can be found in the Notices Section of today's **Federal Register**. As a result of the comments, EPA decided to withdraw the site specific rule and proceed under the authority of the Nebraska RCRA program. Notification of the withdrawal was published in the **Federal Register** on December 30, 1997 (FRL 5942–5; 62 FR 67736).

The Molex Project XL provides flexibility to the facility in managing their waste sludges. The facility has decided to segregate waste streams which had previously been co-mingled into a single waste stream. By changing the process lines to generate separate waste streams (nickel, copper, tin/lead), the facility can optimize the precipitation of each metal more effectively before the effluent is sent to the Publicly Owned Treatment Works (POTW).

The environmental benefit of this project is a substantial reduction in the mass loading of metals entering the City of Lincoln's POTW. In addition, the resultant mono-metal sludges will be commodity-like materials suitable for recycling by reclaimers. A secondary environmental benefit will be an increase in recycling and a reduction in the amount of material that would otherwise be landfilled. The Nebraska Department of Environmental Quality is giving Molex a temporary variance from classifying as solid waste nickel, copper, and tin/lead non-precious metals containing sludges.

DATES: This action is effective August 13, 1998. Additional information is provided in the section entitled **ADDRESSES.**

ADDRESSES: The complete administrative record is maintained at EPA Region VII. Questions and comments should be submitted to: Mr. David Doyle, U.S. Environmental Protection Agency, Region VII, Air, RCRA & Toxics Division, 726 Minnesota Avenue, Kansas City, KS 66101, (913) 551–7667.

Docket. A docket containing supporting information used in developing this final rulemaking is available at U.S. EPA Headquarters, US EPA, 401 M Street SW (1802), Washington, DC 20460, (202) 260–7434; or EPA Region VII, Air, RCRA & Toxics Division, 726 Minnesota Avenue, Kansas City, KS 66101, (913) 551–7667; file information is available at the Nebraska Department of Environmental Quality, Lincoln, NE, (402) 471–4217.

FOR FURTHER INFORMATION CONTACT: Mr. David Doyle, U.S. Environmental Protection Agency, Region VII, Air, RCRA & Toxics Division, 726 Minnesota Avenue, Kansas City, KS 66101, (913) 551–7667.

SUPPLEMENTARY INFORMATION:

Response to Public Comment—Project XL, Molex (Lincoln, Nebraska)

EPA received several comments on the Molex Direct Final Rule, and the Proposed Rule. One of the commenters suggested additional data was needed to support the administrative record for the project. EPA agrees, and has gathered additional data in support of the project. Based on that data and additional analysis, we have determined that existing RCRA regulations (40 CFR 260.31) provide adequate authority and flexibility to allow Molex to proceed with its proposal to segregate waste streams. Therefore, it was decided that there is no need to promulgate a site-specific rule at the federal level to implement this XL project. As a result, EPA decided, rather than proceeding with a site specific rule, to proceed under Nebraska's authorized RCRA program, which has an existing, equivalent variance provision comparable to 40 CFR 260.31.

The first commenter expressed concern that certain wording in the November 3, 1997, **Federal Register** notice and in the draft Final Project Agreement required that Molex ship their wastewater treatment sludges directly to smelters. The commenter asked that EPA clarify this issue by stating that Molex would be allowed, under the terms of the project, to ship their wastewater treatment sludges directly to any legitimate reclaimer, not just to smelters.

EPA agrees with the first commenter that Molex be allowed to ship its sludges to any legitimate reclaimer and did not intend in its proposal to require that Molex ship its sludges only directly to smelters. EPA has made the appropriate wording changes to the Final Project Agreement to address this issue.

The second commenter raised three issues. The first issue concerned the

commenter's belief that based on the administrative record developed for this proposal, Molex was not in compliance with the precious metals recovery provisions provided under the Resource Conservation and Recovery Act (RCRA). Related to this, the second issue concerned the commenter's belief that the record did not support EPA's contention that the wastewater treatment sludges presently generated by Molex are sufficiently ''commodity-like'' in nature to allow the Nebraska Department of Environmental Quality (NDEQ) to grant its temporary variance.

Subsequent to receiving these comments, EPA has investigated both current and historical waste handling practices and all current and historical analytical and financial data associated with the sludges generated by Molex.

In response to the first issue, the information from EPA's investigation shows that under Molex's old operation, sham recycling had not occurred when the sludges were handled under the precious metals exemption, and Molex was in fact in compliance with the requirements of RCRA. In response to the second issue, the information shows that the wastewater treatment sludges generated by Molex at the its new operation have sufficient economic value to be considered ''commodity-like'' and thereby support the temporary variance proposed by the NDEQ. Data and transaction receipts have been entered into the administrative record to document the recycling transactions between Molex and Sipi (Precious Metals Division, 1720 Elston Ave, Chicago Ill, 60622).

To address the commenter's concerns about the record on these first two issues, copies of historical inspection reports, correspondence between Molex and the Nebraska Department of Environmental Quality (NDEQ) and analytical and cost documentation provided to EPA by Molex have recently been added to the administrative record. Copies of these documents can be found at EPA's Project XL homepage at http://www.epa.gov/ProjectXL.

The third issue by the second commenter concerned the commenter's belief that based on statements made by Molex during the development of the project proposal, evidence of contamination of the wastewater treatment sludges by ''organics'' may be occurring. The commenter further stated that EPA is pursuing this XL project without sufficient analytical information of the wastewater sludges, specifically concerning potential contamination of the wastewater treatment sludges. The commenter also believes that EPA is not requiring sufficient analysis of these sludges after the project is underway.

In response to the third comment, EPA requested Molex to undertake extensive sampling and analysis of all the wastewater treatment sludges that are subject to this project. The company agreed to conduct this sampling and analysis and the results can be found at EPA's Project XL homepage. EPA also conducted an onsite inspection of the company, focusing this inspection on the company's wastewater treatment operations and in general its compliance with the requirements of the Clean Water Act.

EPA has reviewed the analytical results of the sludge samples taken by Molex and determined that only one organic constituent, bis (2-ethylhexyl) phthalate, is present in significant concentrations. EPA believes that this contaminant exists in the sludges as a result of plastic packaging, production or treatment equipment used at the facility. Bis(2-ethyhexyl) phthalate, more commonly known as di(2-ethyhexyl) phthalate, or DEHP, is a widely used plasticizer found in products used throughout society. Because of its physical and chemical properties however, exposures typically experienced by the general public of DEHP have not constituted a threat to the public health. Based upon the potential exposure pathways and concentration of DEHP in the Molex sludges and the proposed method of handling of these sludges, EPA has concluded that the amount of DEHP in the sludges pose no risk to public health or the environment.

EPA's inspection of the Molex facility, which was conducted on 4/27–4/30, 1998, determined that little if any potential exists at the facility for contamination of the wastewater sludges by organic contaminants to occur. A copy of EPA's inspection report is also available for review at EPA's XL homepage.

Nonetheless, because some organic contamination has been found in the Molex wastewater sludges, EPA has decided in response to the third comment to require that Molex conduct additional sampling and analysis of these sludge after the project has been implemented, to ensure that levels of DEHP and any other semi-volatile organics in their sludges remain below any levels of concern. Molex will be required to conduct semi-annual sampling and analysis of each of their sludges for semi-volatile organics for the first year of the project. If the concentrations of these constituents remain below levels of concern for the first year, and as long as Molex maintains the same operational processes at the facility, Molex will not be required to conduct additional sampling for these organic constituents for the remainder of the project. The Final Project Agreement has been amended accordingly.

Administrative Requirements

Under Executive Order 12866 (58 FR 51735, October 4, 1993), this action is not a ''significant regulatory action'' and is therefore not subject to review by the Office of Management and Budget. In addition, this action does not impose any enforceable duty or contain any unfunded mandate as described in the Unfunded Mandates Reform Act of 1995 (Pub. L. 104–4), or require prior consultation with State officials as specified by Executive Order 12875 (58 FR 58093, October 28, 1993), or involve special consideration of environmental justice related issues as required by Executive Order 12898 (59 FR 7629, February 16, 1994). Because this action is not subject to notice-and-comment requirements under the Administrative Procedure Act or any other statute, it is not subject to the regulatory flexibility provisions of the Regulatory Flexibility Act (5 U.S.C. 601 *et seq.*).

List of Additional Data/Correspondence Posted on XL Homepage

12/20/90 Letter from Paul Eckerson to Dave Wisch, Nebraska DEC
1/14/91 Letter from DEC to Paul Eckerson
9/13/91 Letter to Mike Driscoll, Molex from David Wisch Nebraska DEC
6/25/91 NDEC inspection report of Molex facility
6/25/95 SAIC RCRA compliance evaluation and inspection report for Molex facility
2/19/98 Letter from Doyle to Eckerson, requesting that organics sampling be conducted by Molex.
2/24/98 E&I Labs 7 page analytical report
3/5/98 Total Toxic Organic analysis for effluent and leachate analysis for the different sludges (41 pages)
3/5/98 Letter from Eckerson to Doyle, describing types of metals used at facility and concentrations of heavy metals in discharge to POTW from both the old and new facilities.
3/18/98 West Coast Analytical Services 16 page analytical report
4/13/98 Letter from Eckerson to Doyle, containing cost data on reclamation of ''old'' wastewater sludges.
4/20/98 Fax from Eckerson to Doyle, containing metals concentrations for ''new'' sludges.
5/15/98 Letter from Bill Gidley NDEC to David Doyle

Dated: August 6, 1998.

Jay Benforado,

Acting Associate Administrator, Office of Reinvention.

[FR Doc. 98–21677 Filed 8–12–98; 8:45 am]

BILLING CODE CODE 6560–50–P

ENVIRONMENTAL PROTECTION AGENCY

[FRL–6143–5]

Regulatory Reinvention (XL) Pilot Projects

AGENCY: Environmental Protection Agency (EPA).

ACTION: Notice of availability of Massachusetts Environmental Results Program Project XL Draft Umbrella Final Project Agreement.

SUMMARY: EPA is today requesting comments on a proposed Project XL Final Project Agreement (FPA) for the Massachusetts Department of Environmental Protection. The FPA is a voluntary agreement developed collaboratively by the Massachusetts Department of Environmental Protection, stakeholders, and EPA. Project XL, announced in the **Federal Register** on May 23, 1995 (60 FR 27282), gives regulated sources the flexibility to develop alternative strategies that will replace or modify specific regulatory requirements on the condition that they produce greater environmental benefits. EPA has set a goal of implementing a total of fifty projects undertaken in full partnership with the states.

The draft FPA for the Massachusetts Department of Environmental Protection (DEP) proposes to streamline permitting and reporting processes in the state. The Environmental Results Program (ERP), was developed to reduce the number of permits applied for, renewed, and issued through a program of facility-wide, performance-based self-certification. Beginning with a demonstration project of 23 companies, industry representatives have cooperated with Massachusetts DEP to establish criteria for reporting compliance with state performance and operating standards in certain industrial categories, without developing permits for each facility. The first 3 sectors of this project are Dry Cleaners, Photo Processors, and Printers.

Massachusetts DEP will guide companies through the process, providing explanations of laws and regulations and ideas for meeting associated requirements. The project is intended to reduce resources expended by both the DEP and industry in the permitting process, as well as improve compliance by offering companies flexibility in pollution prevention. Massachusetts DEP believes that after an initial evaluation and revision phase, the program will be easily transferable to other industry sectors throughout Massachusetts and other states. The draft FPA would provide a framework for developing self-certification requirements for industrial sectors and for assessing whether those requirements achieve superior environmental performance.

Massachusetts proposed project is a multi-sector, multi-facility attempt to incorporate environmental management practices across entire business sectors. It is an attempt to reduce the reporting burden for affected facilities and the DEP while fostering superior environmental performance by identifying and encouraging opportunities for pollution prevention. The draft umbrella FPA would allow the Massachusetts DEP an expedited review process for later proposed addenda which will demonstrate superior environmental performance for each specific sector involved. The regulatory flexibility necessary to implement sector-specific projects will also be discussed in each sector-specific addendum.

As part of its draft FPA, Massachusetts DEP will actively work to ensure and maintain involvement of key stakeholders and the general public in ERP development. DEP has developed an ERP Design Team comprised of representatives from EPA, other government entities, environmental advocacy groups, business and industry, consulting firms, and the legal community.

DATES: The period for submission of comments ends on September 14, 1998.

ADDRESSES: All comments on the draft Final Project Agreement should be sent to: Thomas D'Avanzo, U.S. EPA, Region I, John F. Kennedy Building, Boston, MA 02203, or Chad A. Carbone, U.S. EPA, 401 M Street, SW, Room 1027WT (1802), Washington, DC 20460. Comments may also be faxed to Mr. D'Avanzo at (617) 565–4939 or Mr. Carbone at (202) 401–6637. Comments will also be received via electronic mail sent to: davanzo.thomas@epamail.epa.gov or carbone.chad@epamail.epa.gov.

FOR FURTHER INFORMATION CONTACT: To obtain a copy of the proposed Final Project Agreement or Fact Sheet, contact: Thomas D'Avanzo, U.S. EPA, Region I, John F. Kennedy Building, Boston, MA 02203, or Chad A. Carbone, U.S. EPA, 401 M Street, SW, Room 1027WT (1802), Washington, DC 20460. The documents are also available via the Internet at the following location: ''http://yosemite.epa.gov/xl/xl__home.nsf/all/homepage.'' In addition, public files on the Project are located at EPA Region I in Boston. Questions to EPA regarding the documents can be directed to Thomas D'Avanzo at (617) 566–3277 or Chad A. Carbone at (202) 260–4296.

To be included on the Massachusetts ERP Project XL mailing list to receive information about future public meetings, XL progress reports and other mailings from Massachusetts on the XL Project, contact: Tara Velazquez, Massachusetts Executive Office of Environmental Affairs, Department of Environmental Protection, 1 Winter Street, Boston, MA 02108. Ms. Velazquez can also be reached by telephone at (617) 292–5505. For information on all other aspects of the XL Program contact Christopher Knopes at the following address: Office of Reinvention, United States Environmental Protection Agency, Room 1029, 401 M Street, SW (1802), Washington, DC 20460. Additional information on Project XL, including documents referenced in this notice, other EPA policy documents related to Project XL, regional XL contacts, application information, and descriptions of existing XL projects and proposals, is available via the Internet at ''http://yosemite.epa.gov/xl/xl__home.nsf/all/homepage'' and via an automated fax-on-demand menu at (202) 260–8590.

Identification of Document: Notice of availability of Massachusetts Environmental Results Program Project XL Draft Umbrella Final Project Agreement.

Dated: August 3, 1998.

Lisa Lund,

Deputy Associate Administrator for Reinvention Programs, Office of Reinvention.

[FR Doc. 98–21673 Filed 8–12–98; 8:45 am]

BILLING CODE 6560–50–P

federal register

Thursday
August 13, 1998

Part V

Department of Commerce

International Trade Administration

Porcelain-on-Steel Cookware From Mexico; Amended Final Results of Antidumping Duty Administrative Review; Notice

DEPARTMENT OF COMMERCE

International Trade Administration

[A–201–504]

Porcelain-on-Steel Cookware From Mexico: Notice of Amended Final Results of Antidumping Duty Administrative Review

AGENCY: Import Administration, International Trade Administration, Department of Commerce.

EFFECTIVE DATE: August 13, 1998.

FOR FURTHER INFORMATION CONTACT: Katherine Johnson or David J. Goldberger, Import Administration, International Trade Administration, U.S. Department of Commerce, 14th Street and Constitution Avenue, N.W., Washington, D.C. 20230; telephone, (202) 482–4929 or (202) 482–4136, respectively.

SUPPLEMENTARY INFORMATION:

The Applicable Statute

Unless otherwise indicated, all citations to the statute are references to the provisions effective January 1, 1995, the effective date of the amendments made to the Tariff Act of 1930, as amended (the Act), by the Uruguay Round Agreements Act (URAA). In addition, unless otherwise indicated, all citations to the Department of Commerce's (the Department's) regulations are to the provisions codified at 19 CFR Part 353 (April 1997).

Scope of the Review

The merchandise covered by this review is porcelain-on-steel cookware, including tea kettles, that do not have self-contained electric heating elements. All of the foregoing are constructed of steel and are enameled or glazed with vitreous glasses. This merchandise is currently classifiable under *Harmonized Tariff Schedule of the United States* (HTSUS) subheading 7323.94.00. Kitchenware currently entering under HTSUS subheading 7323.94.00.30 is not subject to the order. Although the HTSUS subheadings are provided for convenience and Customs purposes, our written description of the scope of this proceeding is dispositive.

Amendment of Final Results

On July 16, 1998, the Department of Commerce (the Department) published the final results of the administrative review of the antidumping duty order on porcelain-on-steel cookware from Mexico (63 FR 38373). This review covered Cinsa, S.A. de C.V. (Cinsa) and Esmaltaciones de Norte America, S.A. de C.V. (ENASA), exporters of the subject merchandise to the United States. The period of review (POR) is December 1, 1995, through November 30, 1996.

On July 23, 1998, counsel for respondents filed an allegation of a ministerial error with regard to the final results in this review. *See* August 7, 1998, Memorandum from the Team to Louis Apple for a detailed description of respondents' allegation.

Comment: Use of Incorrect Exchange Rates.

Respondents alleged that the Department made a ministerial error, as defined in 19 CFR 353.28(d), by inadvertently using the 40-day rolling average exchange rates rather than daily exchange rates, as certified by the Federal Reserve, for currency conversion purposes. The respondents claim that in the preliminary results **Federal Register** notice the Department stated that it intended to use daily exchange rates, as certified by the Federal Reserve. *See Porcelain-on-Steel Cookware from Mexico: Preliminary Results of Antidumping Duty Administrative Review,* 63 FR 1430 (January 9, 1998). However, a review of the preliminary results computer program establishes that the Department used the 40-day rolling average exchange rates, and not the daily certified exchange rates. Cinsa and ENASA noted in their case brief that in cases where the Department determines that the home market economy was hyper-inflationary, as in the case of Mexico during the period of review, daily exchange rates are to be used. Accordingly, respondents claim that for purposes of the final results, the Department should have used the daily exchange rates in its margin program.

DOC Position: We agree with the respondents. In the final results we stated that we intended to change the exchange rate methodology and use the certified daily exchange rates for purposes of the final results. However, the 40-day rolling average rates were inadvertently used for purposes of the final results. Because it was our express intent to utilize the daily rates in our results, we conclude that the Department made a ministerial error, as defined by 19 CFR 353.28(d), in not amending the computer program. Thus, in accordance with 19 CFR 353.28(c), we have corrected this ministerial error and amended the final results.

Amended Final Results of Review

As a result of our review, we have determined that the following margins exist:

Manufacturer/exporter	Review period	Margin percent
Cinsa	12/1/95–11/30/96	16.91
ENASA ..	12/1/95–11/30/96	61.66

The Department shall determine, and the Customs Service shall assess, antidumping duties on all appropriate entries. Individual differences between United States price and foreign market value may vary from the percentages stated above. The Department will issue appraisement instructions directly to the Customs Service. Furthermore, the following deposit requirements will be effective, upon publication of this notice of amended final results of review for all shipments of porcelain-on-steel cookware from Mexico entered, or withdrawn from warehouse, for consumption on or after the publication date, as provided for by section 751(a)(1) of the Act: (1) the cash deposit rate for the reviewed companies will be the rate for the firms as stated above; (2) for previously investigated companies not listed above, the cash deposit rate will continue to be the company-specific rate published for the most recent period; (3) if the exporter is not a firm covered in this review, or the original investigation, but the manufacturer is, the cash deposit rate will be the rate established for the most recent period for the manufacturer of the merchandise; and (4) the cash deposit rate for all other manufacturers or exporters will continue to be 29.52 percent for porcelain-on-steel cookware from Mexico, the all others rate established in the LTFV investigation.

These cash deposit requirements, when imposed, shall remain in effect until publication of the final results of the next administrative review.

This notice serves as a final reminder to importers of their responsibility under 19 CFR 353.26 to file a certificate regarding the reimbursement of antidumping duties prior to liquidation of the relevant entries during this review period. Failure to comply with this requirement could result in the Secretary's presumption that reimbursement of antidumping duties occurred and the subsequent assessment of double antidumping duties.

This notice also serves as a reminder to parties subject to administrative protective order (APO) of their responsibility concerning the disposition of proprietary information disclosed under APO in accordance with section 353.34(d) of the Department's regulations. Timely notification of return/destruction of APO materials or conversion to judicial

protective order is hereby requested. Failure to comply with the regulations and the terms of an APO is a sanctionable violation.

This administrative review and notice are in accordance with section 751(a)(1) of the Act (19 U.S.C. 1675(a)(1)) and 19 CFR 353.22.

Dated: August 10, 1998.

Robert S. LaRussa,

Assistant Secretary for Import Administration.

[FR Doc. 98–21928 Filed 8–12–98; 9:10 am]

BILLING CODE 3510–DS–P

federal register

Thursday
August 13, 1998

Part VI

Department of Education

Special Education—Research and Innovation To Improve Services and Results for Children With Disabilities and Special Education—Technology and Media Services for Individuals With Disabilities Programs; Notice

DEPARTMENT OF EDUCATION

Special Education—Research and Innovation To Improve Services and Results for Children With Disabilities and Special Education—Technology and Media Services for Individuals With Disabilities Programs

AGENCY: Department of Education.

ACTION: Notice inviting applications for new awards for fiscal year 1999.

SUMMARY: On June 4, 1997, the President signed into law Public Law 105–17, the Individuals With Disabilities Education Act Amendments of 1997, amending the Individuals With Disabilities Education Act (IDEA).

This notice provides closing dates and other information regarding the transmittal of applications for fiscal year 1999 competitions under two programs authorized by IDEA, as amended. The two programs are: (1) Special Education—Research and Innovation To Improve Services and Results for Children With Disabilities (five priorities); and (2) Special Education—Technology and Media Services for Individuals With Disabilities (one priority).

This notice supports the National Education Goals by helping to improve results for children with disabilities.

Waiver of Rulemaking

It is generally the practice of the Secretary to offer interested parties the opportunity to comment on proposed priorities. However, section 661(e)(2) of IDEA makes the Administrative Procedure Act (5 U.S.C. 553) inapplicable to the priorities in this notice. In order to make awards on a timely basis, the Secretary has decided to publish these priorities in final under the authority of section 661(e)(2).

General Requirements

(a) Projects funded under this notice must make positive efforts to employ and advance in employment qualified individuals with disabilities in project activities (see Section 606 of IDEA);

(b) Applicants and grant recipients funded under this notice must involve individuals with disabilities or parents of individuals with disabilities in planning, implementing, and evaluating the projects (see Section 661(f)(1)(A) of IDEA);

(c) Projects funded under these priorities must budget for a two-day Project Directors' meeting in Washington, DC during each year of the project; and

(d) In a single application, an applicant is required to address only one absolute priority in this notice.

Note: The Department of Education is not bound by any estimates in this notice.

Research and Innovation To Improve Services and Results for Children With Disabilities

Purpose of Program: To produce, and advance the use of, knowledge to: (1) improve services provided under IDEA, including the practices of professionals and others involved in providing those services to children with disabilities; and (2) improve educational and early intervention results for infants, toddlers, and children with disabilities.

Eligible applicants: State and local educational agencies; institutions of higher education; other public agencies; private nonprofit organizations; outlying areas; freely associated States; and Indian tribes or tribal organizations.

Applicable regulations: (a) The Education Department General Administrative Regulations (EDGAR) in 34 CFR parts 74, 75, 77, 79, 80, 81, 82, 85, and 86; (b) The selection criteria for Absolute Priorities 1–3 are drawn from the EDGAR menu—RESEARCH program area; (c) The selection criteria for Absolute Priority 4 are drawn from the EDGAR menu—MODEL DEMONSTRATION AND PROJECTS OF NATIONAL SIGNIFICANCE program area; and (d) The selection criteria for Absolute Priority 5 are drawn from the EDGAR menu— OUTREACH program area.

Note: The regulations in 34 CFR part 86 apply to institutions of higher education only.

Priority

Under 34 CFR 75.105(c)(3), the Secretary gives an absolute preference to applications that meet the following priorities. The Secretary funds under these competitions only applications that meet these absolute priorities:

Absolute Priority 1—Student-Initiated Research Projects (84.324B).

This priority provides support for short-term (up to 12 months) postsecondary student-initiated research projects focusing on special education and related services for children with disabilities and early intervention services for infants and toddlers, consistent with the purposes of the program, as described in Section 672 of the Act.

Projects must—

(1) Develop research skills in postsecondary students; and

(2) Include a principal investigator who serves as a mentor to the student researcher while the project is carried out by the student.

Project Period: Up to 12 months.

Maximum Award: The Secretary rejects and does not consider an application that proposes a budget exceeding $20,000 for the entire project period. However, because of budgetary considerations contingent upon congressional action, the Secretary may change the maximum amount through a notice published in the **Federal Register**.

Page Limits: Part III of the application, the application narrative, is where an applicant addresses the selection criteria that are used by reviewers in evaluating the application. An applicant must limit Part III to the equivalent of no more than 25 double-spaced pages, using the following standards: (1) A ''page'' is 8½″ × 11″ (on one side only) with one-inch margins (top, bottom, and sides). (2) All text in the application narrative, including titles, headings, footnotes, quotations, references, and captions, as well as all text in charts, tables, figures, and graphs, must be double-spaced (no more than 3 lines per vertical inch). If using a proportional computer font, use no smaller than a 12-point font, and an average character density no greater than 18 characters per inch. If using a nonproportional font or a typewriter, do not use more than 12 characters to the inch.

The page limit does not apply to Part I—the cover sheet; Part II—the budget section (including the narrative budget justification); Part IV—the assurances and certifications; or the one-page abstract, resumes, bibliography, and letters of support. However, all of the application narrative must be included in Part III. If an application narrative uses a smaller print size, spacing, or margin that would make the narrative exceed the equivalent of the page limit, the application will not be considered for funding.

Absolute Priority 2—Field-Initiated Research Projects (84.324C)

This priority provides support for a wide range of field-initiated research projects that support innovation, development, exchange, and use of advancements in knowledge and practice as described in Section 672 of the Act including the improvement of early intervention, instruction, and learning for infants, toddlers, and children with disabilities.

Invitational Priorities

Within Absolute Priority 1, the Secretary is particularly interested in applications that meet one or more of the following invitational priorities. However, under 34 CFR 75.105(c)(1), an application that meets one or more of these invitational priorities does not

receive competitive or absolute preference over other applications:

(1) Projects to address the specific problems of over-identification and under-identification of children with disabilities. (See Section 672(a)(3) of the Act).

(2) Projects to develop and implement effective strategies for addressing inappropriate behavior of students with disabilities in schools, including strategies to prevent children with emotional and behavioral problems from developing emotional disturbances that require the provision of special education and related services. (See Section 672(a)(4) of the Act).

(3) Projects studying and promoting improved alignment and compatibility of general and special education reforms concerned with curricular and instructional reform, evaluation and accountability of those reforms, and administrative procedures. (See Section 672(b)(2)(D) of the Act).

(4) Projects that advance knowledge about the coordination of education with health and social services. (See Section 672(b)(2)(G) of the Act).

Project Period: The majority of projects will be funded for up to 36 months. Only in exceptional circumstances—such as research questions that require repeated measurement within a longitudinal design—will projects be funded for more than 36 months, up to a maximum of 60 months.

Maximum Award: The Secretary rejects and does not consider an application that proposes a budget exceeding $180,000 for any single budget period of 12 months. However, because of budgetary considerations contingent upon congressional action, the Secretary may change the maximum amount through a notice published in the **Federal Register**.

Page Limits: Part III of the application, the application narrative, is where an applicant addresses the selection criteria that are used by reviewers in evaluating the application. An applicant must limit Part III to the equivalent of no more than 50 double-spaced pages, using the following standards: (1) A ''page'' is 8½″ × 11″ (on one side only) with one-inch margins (top, bottom, and sides). (2) All text in the application narrative, including titles, headings, footnotes, quotations, references, and captions, as well as all text in charts, tables, figures, and graphs, must be double-spaced (no more than 3 lines per vertical inch). If using a proportional computer font, use no smaller than a 12-point font, and an average character density no greater than 18 characters per inch. If using a nonproportional font or a typewriter, do not use more than 12 characters to the inch.

The page limit does not apply to Part I—the cover sheet; Part II—the budget section (including the narrative budget justification); Part IV—the assurances and certifications; or the one-page abstract, resumes, bibliography, and letters of support. However, all of the application narrative must be included in Part III. If an application narrative uses a smaller print size, spacing, or margin that would make the narrative exceed the equivalent of the page limit, the application will not be considered for funding.

Absolute Priority 3—Initial Career Awards (84.324N).

Background

There is a need to enable individuals in the initial phases of their careers to initiate and develop promising lines of research that would improve early intervention services for infants and toddlers, and special education and related services for children with disabilities. Support for research activities among individuals in the initial phases of their careers is intended to develop the capacity of the special education research community. This priority would address the additional need to provide support for a broad range of field-initiated research projects—focusing on the special education and related services for children with disabilities and early intervention for infants and toddlers—consistent with the purpose of the program as described in Section 672 of the Act.

Priority

The Secretary establishes an absolute priority for the purpose of awarding grants to eligible applicants for the support of individuals in the initial phases of their careers to initiate and develop promising lines of research consistent with the purposes of the program. For purposes of this priority, the initial phase of an individual's career is considered to be the first three years after completing a doctoral program and graduating (e.g., for fiscal year 1999 awards, projects may support individuals who completed a doctoral program and graduated no earlier than the 1995–96 academic year).

Projects must—

(a) Pursue a line of inquiry that reflects a programmatic strand of research emanating either from theory or a conceptual framework. The line of research must be evidenced by a series of related questions that establish directions for designing future studies extending beyond the support of this award. The project is not intended to represent all inquiry related to the particular theory or conceptual framework; rather, it is expected to initiate a new line or advance an existing one;

(b) In addition to involving individuals with disabilities or parents of individuals with disabilities in planning, implementing, and evaluating the project, as required by the Act, include, in design and conduct, sustained involvement with nationally recognized experts having substantive or methodological knowledge and expertise relevant to the proposed research. The experts do not have to be at the same institution or agency at which the project is located, but the interaction with the project must be sufficient to develop the capacity of the initial career researcher to effectively pursue the research into mid-career activities. At least 50 percent of the researcher's time must be devoted to the project;

(c) Prepare its procedures, findings, and conclusions in a manner that informs other interested researchers and is useful for advancing professional practice or improving programs and services to infants, toddlers, and children with disabilities and their families; and

(d) Disseminate project procedures, findings, and conclusions to appropriate research institutes and technical assistance providers

Project Period: Up to 36 months.

Maximum Award: The Secretary rejects and does not consider an application that proposes a budget exceeding $75,000 for any single budget period of 12 months. However, because of budgetary considerations contingent upon congressional action, the Secretary may change the maximum amount through a notice published in the **Federal Register**.

Page Limits: Part III of the application, the application narrative, is where an applicant addresses the selection criteria that are used by reviewers in evaluating the application. An applicant must limit Part III to the equivalent of no more than 30 double-spaced pages, using the following standards: (1) A ''page'' is 8½″ x 11″ (on one side only) with one-inch margins (top, bottom, and sides). (2) All text in the application narrative, including titles, headings, footnotes, quotations, references, and captions, as well as all text in charts, tables, figures, and graphs, must be double-spaced (no more than 3 lines per vertical inch). If using a proportional computer font, use no smaller than a 12-

point font, and an average character density no greater than 18 characters per inch. If using a nonproportional font or a typewriter, do not use more than 12 characters to the inch.

The page limit does not apply to Part I—the cover sheet; Part II—the budget section (including the narrative budget justification); Part IV—the assurances and certifications; or the one-page abstract, resumes, bibliography, and letters of support. However, all of the application narrative must be included in Part III. If an application narrative uses a smaller print size, spacing, or margin that would make the narrative exceed the equivalent of the page limit, the application will not be considered for funding.

Program Authority: Section 672 of the Act.

Absolute Priority 4—Model Demonstration Projects for Children With Disabilities (84.324M)

This priority supports model demonstration projects that develop, implement, evaluate, and disseminate new or improved approaches for providing early intervention, special education, and related services to infants, toddlers, and children with disabilities, and students with disabilities who are pursuing post-school employment, postsecondary education or independent living goals. Projects supported under this priority are expected to be major contributors of models or components of models for service providers and for outreach projects funded under the Individuals with Disabilities Education Act.

Requirements for all Demonstration Projects:

A model demonstration project must—

(a) Develop and implement the model with specific components or strategies that are based on theory, research, or evaluation data;

(b) Evaluate the model by using multiple measures of results to determine the effectiveness of the model and its components or strategies; and

(c) Produce detailed procedures and materials that would enable others to replicate the model.

Federal financial participation for a project funded under this priority will not exceed 90 percent of the total annual costs of development, operation, and evaluation of the project (see Section 661(f)(2)(A) of IDEA).

In addition to the annual two-day Project Directors' meeting in Washington, DC mentioned in the General Requirements section of this notice, projects must budget for another meeting in Washington, DC to collaborate with the Federal project officer and the other projects funded under this priority, to share information and discuss model development, evaluation, and project implementation issues.

Project Period: Up to 48 months.

Maximum Award: The Secretary rejects and does not consider an application that proposes a budget exceeding $150,000 (exclusive of any matching funds) for any single budget period of 12 months. However, because of budgetary considerations contingent upon congressional action, the Secretary may change the maximum amount through a notice published in the **Federal Register**.

Page Limit: Part III of the application, the application narrative, is where an applicant addresses the selection criteria that are used by reviewers in evaluating the application. An applicant must limit Part III to the equivalent of no more than 40 double-spaced pages, using the following standards: (1) A ''page'' is 8½'' x 11'' (on one side only) with one-inch margins (top, bottom, and sides). (2) All text in the application narrative, including titles, headings, footnotes, quotations, references, and captions, as well as all text in charts, tables, figures, and graphs, must be double-spaced (no more than 3 lines per vertical inch). If using a proportional computer font, use no smaller than a 12-point font, and an average character density no greater than 18 characters per inch. If using a nonproportional font or a typewriter, do not use more than 12 characters to the inch.

The page limit does not apply to Part I—the cover sheet; Part II—the budget section (including the narrative budget justification); Part IV—the assurances and certifications; or the one-page abstract, resumes, bibliography, and letters of support. However, all of the application narrative must be included in Part III. If an application narrative uses a smaller print size, spacing, or margin that would make the narrative exceed the equivalent of the page limit, the application will not be considered for funding.

Absolute Priority 5—Outreach Projects for Children with Disabilities (84.324R).

This priority supports projects that will assist educational and other agencies in replicating proven models, components of models, and other exemplary practices that improve services for infants, toddlers, children with disabilities, and students with disabilities who are pursuing post-school employment, postsecondary education or independent living goals.

For the purposes of this priority, a ''proven model'' is a comprehensive description of a theory or system that, when applied, has been shown to be effective. ''Exemplary practices'' are effective strategies and methods used to deliver educational or related services. The models, components of models, or exemplary practices selected for outreach may include models developed for pre-service and in-service personnel preparation, and do not need to have been developed through projects funded under IDEA, or by the applicant.

An outreach project must:

(a) Provide supporting data or other documentation in the application as to the effectiveness of the model, component(s) of a model, or exemplary practice(s) selected for outreach;

(b) Select implementation sites in multiple regions within one State or multiple States and describe the criteria for their selection;

(c) Describe the expected costs, needed personnel, staff training, equipment, and sequence of implementation activities associated with the replication efforts, including a description of any modifications to the model or practice made by the sites;

(d) Include public awareness, product development and dissemination, training, and technical assistance activities and written plans for working with sites; and

(e) Coordinate dissemination and replication activities conducted as part of outreach with dissemination projects, technical assistance providers, consumer and advocacy organizations, State and local educational agencies, and the lead agencies for Part C of IDEA, as appropriate.

Prepare products from the project in formats that are useful for specific audiences, including parents, administrators, teachers, early intervention personnel, related services personnel, and individuals with disabilities (see Section 661(f)(2)(B) of IDEA).

Federal financial participation for a project funded under this priority will not exceed 90 percent of the total annual costs of development, operation, and evaluation of the project (see Section 661(f)(2)(A) of IDEA).

In addition to the annual two-day Project Directors' meeting in Washington, D.C. mentioned in the General Requirements section of this notice, projects must budget for another meeting in Washington, D.C. to collaborate with the Federal project officer and the other projects funded under this priority, to share information and discuss model development,

evaluation and project implementation issues.

Project Period: Up to 36 months.

Maximum Award: The Secretary rejects and does not consider an application that proposes a budget exceeding $150,000 for any single budget period of 12 months. The Secretary may change the maximum amount through a notice published in the **Federal Register**.

Page Limits: Part III of the application, the application narrative, is where an applicant addresses the selection criteria that are used by reviewers in evaluating the application. An applicant must limit Part III to the equivalent of no more than 40 double-spaced pages, using the following standards: (1) A ''page'' is 8½″ x 11″ (on one side only) with one-inch margins (top, bottom, and sides). (2) All text in the application narrative, including titles, headings, footnotes, quotations, references, and captions, as well as all text in charts, tables, figures, and graphs, must be double-spaced (no more than 3 lines per vertical inch). If using a proportional computer font, use no smaller than a 12-point font, and an average character density no greater than 18 characters per inch. If using a nonproportional font or a typewriter, do not use more than 12 characters to the inch.

The page limit does not apply to Part I—the cover sheet; Part II—the budget section (including the narrative budget justification); Part IV—the assurances and certifications; or the one-page abstract, resumes, bibliography, and letters of support. However, all of the application narrative must be included in Part III. If an application narrative uses a smaller print size, spacing, or margin that would make the narrative exceed the equivalent of the page limit, the application will not be considered for funding.

Special Education—Technology and Media Services for Individuals with Disabilities

Purpose of Program: The purpose of this program is to promote the development, demonstration, and utilization of technology and to support educational media activities designed to be of educational value to children with disabilities. This program also provides support for some captioning, video description, and cultural activities.

Eligible Applicants: State and local educational agencies; institutions of higher education; other public agencies; private nonprofit organizations; outlying areas; freely associated States; Indian tribes or tribal organizations; and for-profit organizations.

Applicable Regulations: (a) The Education Department General Administrative Regulations (EDGAR) in 34 CFR parts 74, 75, 77, 79, 80, 81, 82, 85, and 86; and (b) The selection criteria for the Steppingstones of Technology Innovation for Students with Disabilities priority are drawn from the EDGAR menu—RESEARCH program area.

Note: The regulations in 34 CFR part 86 apply to institutions of higher education only.

Priority

Under section 687 and 34 CFR 75.105(c)(3), the Secretary gives an absolute preference to applications that meet the following priority. The Secretary funds under this competition only those applications that meet this absolute priority:

Absolute Priority—Steppingstones of Technology Innovation for Students With Disabilities (84.327A)

The purpose of this priority is for the support of projects that—

(a) Select and describe a technology-based approach for achieving one or more of the following purposes for early intervention, preschool, elementary, and secondary school students with disabilities: (1) improving literacy; (2) improving access to and participation in the general curriculum, or appropriate activities for preschool children; and (3) improving accountability and participation in educational reform. The technology-based approach must be an innovative combination of a new technology and additional curriculum materials and instructional methodologies that enable the technology to achieve educational purposes for students with disabilities;

(b) Justify the approach on the basis of research or theory that supports the effectiveness of the technology-based approach for achieving one or more of the purposes presented in paragraph (a); and

(c) Clearly identify and conduct work in *ONE* of the following phases:

(1) *Phase 1—Development:* Projects funded under Phase 1 must develop and refine a technology-based approach, and test its feasibility for use with students with disabilities. Activities may include development, adaptation, and refinement of technology, curriculum materials, or instructional methodologies. Activities must include formative evaluation. The primary product of Phase 1 should be a promising technology-based approach that is suitable for field-based evaluation of effectiveness.

(2) *Phase 2—Research and Evaluation:* Projects funded under Phase 2 must select a promising technology-based approach that has been developed in a manner consistent with Phase 1, and subject the approach to rigorous field-based research and evaluation to determine effectiveness and feasibility in educational settings. Products of Phase 2 include a further refinement and description of the technology-based approach, and sound evidence that, in a defined range of real world contexts, the approach can be effective in achieving one or more of the purposes presented in paragraph (c)(1).

(3) *Phase 3—Implementation and Validation:* Projects funded under Phase 3 must select a technology-based approach that has been evaluated for effectiveness and feasibility in a manner consistent with Phase 2, and must study the implementation of the approach in multiple, complex settings to acquire an improved understanding of the range of contexts in which the approach can be used effectively, and the factors that determine the effectiveness and sustainability of the approach in this range of contexts. Factors to be studied in Phase 3 include factors related to the technology, curriculum materials and instructional methodologies that constitute the technology-based approach. Phases 2 and 3 can be contrasted as follows: Phase 2 studies the effectiveness the approach can have, while Phase 3 studies the effectiveness the approach is likely to have in sustained use in a range of typical educational settings. The primary product of Phase 3 should be a detailed blueprint that can be used in dissemination and utilization of the technology-based approach. Also to be studied in Phase 3 are contextual factors associated with students, teacher attitudes, skills and actions, physical setting, curriculum and instruction, resources, and professional development and policy supports, etc.;

(d) In addition to the annual two-day Research to Practice Division Project Directors' meeting in Washington, D.C. mentioned above in the General Requirements section of this notice, budget for another annual trip to Washington, D.C. to collaborate with the Federal project officer and the other projects funded under this priority, and to share information and discuss findings and methods of dissemination; and

(e) Prepare products from the project in formats that are useful for specific audiences as appropriate, including parents, administrators, teachers, early intervention personnel, related services

personnel, researchers, and individuals with disabilities.

Project Period: The Secretary intends to fund at least one project in each phase. Projects funded under Phase 1 will be funded for up to 24 months. Projects funded under Phase 2 will be funded for up to 24 months. Projects funded under Phase 3 will be funded for up to 36 months. During the final year of projects funded under Phase 3, the Secretary will determine whether or not to fund an optional six-month period for additional dissemination activities.

Maximum Award: The Secretary rejects and does not consider an application that proposes a budget exceeding $200,000 for any single budget period of 12 months for projects in phases 1 and 2, and $300,000 for projects in phase 3. The Secretary may change the maximum amount through a notice published in the **Federal Register**.

Page Limits: Part III of the application, the application narrative, is where an applicant addresses the selection criteria that are used by reviewers in evaluating the application. An applicant must limit Part III to the equivalent of no more than 40 double-spaced pages, using the following standards: (1) A ''page'' is 8½″×11″ (on one side only) with one-inch margins (top, bottom, and sides). (2) All text in the application narrative, including titles, headings, footnotes, quotations, references, and captions, as well as all text in charts, tables, figures, and graphs, must be double-spaced (no more than 3 lines per vertical inch). If using a proportional computer font, use no smaller than a 12-point font, and an average character density no greater than 18 characters per inch. If using a nonproportional font or a typewriter, do not use more than 12 characters to the inch.

The page limit does not apply to Part I—the cover sheet; Part II—the budget section (including the narrative budget justification); Part IV—the assurances and certifications; or the one-page abstract, resumes, bibliography, and letters of support. However, all of the application narrative must be included in Part III. If an application narrative uses a smaller print size, spacing, or margin that would make the narrative exceed the equivalent of the page limit, the application will not be considered for funding.

For Applications and General Information Contact: Requests for applications and general information should be addressed to the Grants and Contracts Services Team, 600 Independence Avenue, SW, room 3317, Switzer Building, Washington, DC 20202–2641. The preferred method for requesting information is to FAX your request to: (202) 205–8717. Telephone: (202) 260–9182.

Individuals who use a telecommunications device for the deaf (TDD) may call the TDD number: (202) 205–8953.

Individuals with disabilities may obtain a copy of this notice or the application packages referred to in this notice in an alternate format (e.g. Braille, large print, audiotape, or computer diskette) by contacting the Department as listed above. However, the Department is not able to reproduce in an alternate format the standard forms included in the application package.

Intergovernmental Review

All programs in this notice (except for Research and Innovation Projects) are subject to the requirements of Executive Order 12372 and the regulations in 34 CFR Part 79. The objective of the Executive order is to foster an intergovernmental partnership and a strengthened federalism by relying on processes developed by State and local governments for coordination and review of proposed Federal financial assistance.

In accordance with the order, this document is intended to provide early notification of the Department's specific plans and actions for those programs.

INDIVIDUALS WITH DISABILITIES EDUCATION ACT APPLICATION NOTICE FOR FISCAL YEAR 1998

CFDA No. and name	Applications available	Application deadline date	Deadline for intergovernmental review	Maximum award (per year)*	Page limit**	Estimated number of awards
84.324B Student Initiated Research Projects	8/20/98	2/05/99	4/06/99	$20,000	25	12
84.324C Field Initiated Research Projects	8/20/98	9/28/98	11/27/98	180,000	50	14
84.324N Initial Career Awards	8/20/98	9/28/98	11/27/98	75,000	30	4
84.324M Model Demonstration Projects for Children with Disabilities	8/20/98	10/05/98	12/04/98	150,000	40	18
84.324R Outreach Projects for Children with Disabilities	8/20/98	10/05/98	12/04/98	150,000	40	21
84.327A Steppingstones of Technology Innovation for Students with Disabilities	8/20/98	12/18/98	2/16/99	200,000	40	15

* The Secretary rejects and does not consider an application that proposes a budget exceeding the amount listed for each priority for any single budget period of 12 months.

** Applicants must limit the Application Narrative, Part III of the Application, to the page limits noted above. Please refer to the ''Page Limit'' section of this notice for the specific requirements. The Secretary rejects and does not consider an application that does not adhere to this requirement.

Electronic Access to This Document

Anyone may view this document, as well as all other Department of Education documents published in the **Federal Register**, in text or portable document format (pdf) on the World Wide Web at either of the following sites:

http://ocfo.ed.gov/fedreg.htm
http://www.ed.gov/news.html

To use the pdf you must have the Adobe Acrobat Reader Program with Search, which is available free at either of the previous sites. If you have questions about using the pdf, call the U.S. Government Printing Office at (202) 512–1530 or, toll free at 1–888–293–6498.

Anyone may also view these documents in text copy only on an electronic bulletin board of the Department. Telephone: (202) 219–1511 or, toll free, 1–800–222–4922. The documents are located under Option G—Files/Announcements, Bulletins, and Press Releases.

Note: The official version of a document is the document published in the **Federal Register**.

Dated: August 6, 1998.

Judith E. Heumann,

Assistant Secretary for Special Education and Rehabilitative Services.

[FR Doc. 98–21680 Filed 8–12–98; 8:45 am]

BILLING CODE 4000–01–P

Reader Aids

Federal Register

Vol. 63, No. 156

Thursday, August 13, 1998

CUSTOMER SERVICE AND INFORMATION

Federal Register/Code of Federal Regulations

General Information, indexes and other finding aids	**202–523–5227**
Laws	**523–5227**

Presidential Documents

Executive orders and proclamations	**523–5227**
The United States Government Manual	**523–5227**

Other Services

Electronic and on-line services (voice)	**523–4534**
Privacy Act Compilation	**523–3187**
Public Laws Update Service (numbers, dates, etc.)	**523–6641**
TTY for the deaf-and-hard-of-hearing	**523–5229**

ELECTRONIC RESEARCH

World Wide Web

Full text of the daily Federal Register, CFR and other publications:

http://www.access.gpo.gov/nara

Federal Register information and research tools, including Public Inspection List, indexes, and links to GPO Access:

http://www.nara.gov/fedreg

E-mail

PENS (Public Law Electronic Notification Service) is an E-mail service that delivers information about recently enacted Public Laws. To subscribe, send E-mail to

listproc@lucky.fed.gov

with the text message:

subscribe publaws-l <firstname> <lastname>

Use listproc@lucky.fed.gov only to subscribe or unsubscribe to PENS. We cannot respond to specific inquiries at that address.

Reference questions. Send questions and comments about the Federal Register system to:

info@fedreg.nara.gov

The Federal Register staff cannot interpret specific documents or regulations.

FEDERAL REGISTER PAGES AND DATES, AUGUST

41177–41386 3
41387–41706 4
41707–41956 5
41957–42200 6
42201–42566 7
42567–42680 10
42681–43066 11
43067–43286 12
43287–43602 13

CFR PARTS AFFECTED DURING AUGUST

At the end of each month, the Office of the Federal Register publishes separately a List of CFR Sections Affected (LSA), which lists parts and sections affected by documents published since the revision date of each title.

3 CFR

Proclamations:
6641 (Modified by Proc. 7113) 41951
7112 41949
7113 41951
7114 42563
7115 43061

Executive Orders:
13061 (See Proc. 7112) 41949
13080 (See Proc. 7112) 41949
13083 (Suspended by 13095) 42565
13093 (See Proc. 7112) 41949
EO 13095 42565
13096 42681
13097 43065

5 CFR

330 41387
1201 .....41177, 42685
1209 41181
1631 41707
2634 43067
2636 43067
5701 43069

Proposed Rules:
630 43225
2635 41476

7 CFR

17 42283
301 .....41388, 41389, 43287
800 43289
920 41390
948 42686
981 41709
989 42688
993 42284
997 .....41182, 41323
998 41182
1446 41711
1951 41713
1955 41715

Proposed Rules:
300 43117
319 43117
905 42764
1106 43125

8 CFR

Proposed Rules:
17 42283
104 41657
208 41478

9 CFR

77 43290
78 43291
97 41957

Proposed Rules:
93 42593
94 42593
130 42593

10 CFR

Ch. XI 42201
1101 42201
1102 42201

Proposed Rules:
Ch. 1 43580
10 41206
11 41206
20 43516
25 41206
32 43516
35 43516
95 41206

12 CFR

3 42668
6 42668
208 42668
225 42668
325 42668
563 43292
565 42668
567 42668
607 41184
611 41958
614 41958
620 41958
630 41958

Proposed Rules:
26 43052
212 43052
348 43052
404 41478
555 43327
563f 43052
701 .....41976, 41978

13 CFR

Proposed Rules:
120 43330

14 CFR

27 43282
29 43282
39 .....41184, 41393, 41716, 42201, 42203, 42205, 42206, 42208, 42210, 42213, 42214, 42215, 42217, 42219, 42220, 42222, 42691, 43070, 43072, 43294, 43297, 43299
71 .....41323, 41717, 41958, 42223, 42665, 42692, 42694, 42695, 42696, 43073, 43071
97 .....42224, 42567, 42569

Proposed Rules:
39 .....41479, 41481, 41483,

41737, 41739, 41741, 42286, 42288, 42569, 42598, 42770, 43331, 43333, 43335, 43336, 45338, 43340, 43342, 43345, 43347 43349, 43351
65.....41743
66.....41743
71 .....41485, 41743, 41749, 41750, 41751, 41752, 42290, 42291, 42292, 42293, 42294, 42295, 42772
147.....41743

15 CFR

30.....41186
280.....41718
738.....42225
740.....42225
742.....42225
744.....41323, 42225
746.....42225
748.....42225
752.....42225
Proposed Rules:
30.....41979

16 CFR

254.....42570
1610.....42697

17 CFR

231.....41394
240.....42229
241.....41394
249.....42229
271.....41394
276.....41394
Proposed Rules:
Ch. I.....41982
1.....42600

18 CFR

161.....43075
Proposed Rules:
Ch. I.....42974
1b.....41982
37.....42296
161.....42974
250.....42974
284.....42974
343.....41982
385.....41982

20 CFR

404.....41404
416.....41404
Proposed Rules:
416.....42601

21 CFR

5.....41959
165.....42198
358.....43302
510.....41188
520 .....41188, 41189, 41419
522.....41190, 41419
556.....41190
558.....41191
610.....41718
806.....42229
814.....42699
Proposed Rules:
3.....42773
5.....42773
10.....42773
20.....42773
207.....42773
310.....42773
312.....42773
315.....41219
316.....42773
600.....42773
601.....42773
607.....42773
610.....42773
640.....42773
660.....42773
806.....42300

22 CFR

514.....42233

24 CFR

Proposed Rules:
5.....41754
200.....41754
207.....41754
236.....41754
266.....41754
880.....41754
881.....41754
882.....41754
883.....41754
884.....41754
886.....41754
891.....41754
965.....41754
982.....41754
983.....41754

25 CFR

518.....41960
Proposed Rules:
542.....42940

26 CFR

1.....41420, 43303
Proposed Rules:
1 .....41754, 43353, 43354
53.....41486
301.....41486, 43354

29 CFR

Proposed Rules:
1915.....41755
1926.....43452

30 CFR

250.....42699
253.....42699
917.....41423
924.....43305
936.....42574
Proposed Rules:
72.....41755
75.....41755
902.....42774
904.....41506

31 CFR

Proposed Rules:
285.....41687

33 CFR

100 .....41718, 42579, 43321
117 .....41720, 43080, 43322
165.....42233
Proposed Rules:
117.....43080
165.....42304

36 CFR

Proposed Rules:
1254.....42776

39 CFR

20.....41427

40 CFR

52.....43449
62 .....41325, 42719, 42721, 42724, 42726, 43080
62.....41427, 42235
63.....42238
80.....43046
81.....42489
82.....41625, 42728
148.....42110, 42580
159.....41192
180 .....41720, 41727, 42240, 42246, 42248, 42249, 43080, 43085
185.....42249
261.....42110, 42190
266.....42110
268.....42110, 42580
271.....42110, 42580
302.....42110
430.....42238
745.....41430
Proposed Rules:
62 .....41220, 41221, 41756, 42308, 42782, 42783, 42784, 42786, 43127
55.....41991
62.....41508, 42310
63.....41508
72.....41357
73.....41357
82.....41652, 42791
261.....41991, 43361
268.....41536

41 CFR

101.....41420
Proposed Rules:
101–47.....42310, 42792

42 CFR

1008.....43449
Proposed Rules:
Ch. IV.....42796
413.....42797

44 CFR

64.....42257, 42259
65.....42249
67.....42264
Proposed Rules:
67.....42311

45 CFR

233.....42270
1602.....41193
Proposed Rules:
142.....43242

46 CFR

Proposed Rules:
514.....42801

47 CFR

Ch. I.....42275
1 .....41433, 42734, 42735
2.....42276
15.....42276
20.....43033
22.....41201
24.....41201
26.....41201
27.....41201
36.....42753
54.....42753, 43088
64.....43033
69.....42753, 43088
73 .....41735, 42281, 43098
90.....41201
97.....41201, 42276
Proposed Rules:
1.....41538
20.....43026
41.....41757
43.....41538
63.....41538
64.....43026
73 .....41765, 41766, 42802
74.....42802
76.....42330

48 CFR

205.....41972
206.....41972
217.....41972
219.....41972
225.....41972
226.....41972
236.....41972
242.....43449
252.....41972
253.....41972
1511.....41450
1515.....41450
1552.....41450
1609.....42584
1805.....43099
1822.....43099
1842.....42756
1844.....43099
1853.....42756
Proposed Rules:
31 .....43127, 43238, 43239
48.....43236
52.....43236
1827.....43362
1852.....43362

49 CFR

564.....42586
571 .....41451, 42582, 42586
572.....41466
Proposed Rules:
375.....43128
377.....43128
390.....41766
391.....41766, 41769
392.....41766
393.....41766
395.....41766
396.....41766
571.....41222, 42348
575.....41538

50 CFR

17.....42757, 43100
227.....42586
285.....43116
630.....41205
648.....42587
660.....42762, 43324
678.....41736
679.....42281
Proposed Rules:
17 .....41624, 43100, 43362,

43363
20.....41925
229.....42803
600.....41995
648.....43364
679.....41782

REMINDERS

The items in this list were editorially compiled as an aid to Federal Register users. Inclusion or exclusion from this list has no legal significance.

RULES GOING INTO EFFECT AUGUST 13, 1998

AGRICULTURE DEPARTMENT

Animal and Plant Health Inspection Service

Interstate transportation of animals and animal products (quarantine):

Tuberculosis in cattle and bison—

State and area classifications; published 8-13-98

AGRICULTURE DEPARTMENT

Food and Nutrition Service

Food stamp programs:

Mickey Leland Childhood Hunger Relief Act—

Quality control modifications; reporting and recordkeeping requirements; published 7-14-98

COMMERCE DEPARTMENT

National Oceanic and Atmospheric Administration

Fishery conservation and management:

West Coast States and Western Pacific fisheries—

Pacific Coast groundfish; correction; published 8-13-98

FEDERAL COMMUNICATIONS COMMISSION

Television broadcasting:

Cable television systems—

Horizontal ownership limits; published 7-14-98

FEDERAL DEPOSIT INSURANCE CORPORATION

Resolution and receivership rules:

Least cost resolutions, etc.; published 7-14-98

INTERIOR DEPARTMENT

Surface Mining Reclamation and Enforcement Office

Permanent program and abandoned mine land reclamation plan submissions:

Mississippi; published 8-13-98

TRANSPORTATION DEPARTMENT

Coast Guard

Drawbridge operations:

New Jersey; published 8-13-98

TRANSPORTATION DEPARTMENT

Federal Aviation Administration

Class D airspace; published 4-8-98

Class D and Class E airspace; published 6-3-98

Class D and E airspace; published 4-27-98

Class E airspace; published 3-25-98

Correction; published 7-2-98

Class E airspace; correction; published 6-3-98

Colored Federal airways; published 6-16-98

IFR altitudes; published 7-10-98

Jet routes; published 6-4-98

Restricted areas; published 6-16-98

VOR Federal airways; published 6-22-98

VETERANS AFFAIRS DEPARTMENT

Disabilities rating schedule:

Cold injuries; published 7-14-98

COMMENTS DUE NEXT WEEK

AGRICULTURE DEPARTMENT

Agricultural Marketing Service

Apricots grown in—

Washington; comments due by 8-17-98; published 6-16-98

Milk marketing orders:

Southwest Plains; comments due by 8-19-98; published 8-12-98

Oranges, grapefruit, tangerines, and tangelos grown in—

Florida; comments due by 8-17-98; published 7-16-98

Pears (winter) grown in—

Oregon et al.; comments due by 8-20-98; published 7-21-98

Prunes (fresh) grown in—

Washington and Oregon; comments due by 8-17-98; published 7-16-98

AGRICULTURE DEPARTMENT

Federal Crop Insurance Corporation

Crop insurance regulations:

Fresh market tomatoes; comments due by 8-19-98; published 7-20-98

AGRICULTURE DEPARTMENT

Food and Nutrition Service

Child nutrition programs:

Women, infants, and children; special supplemental nutrition program—

Infant formula rebate contracts; requirements for and evaluation of WIC program requests for bids; comments due by 8-17-98; published 7-16-98

COMMERCE DEPARTMENT

National Oceanic and Atmospheric Administration

Fishery conservation and management:

Alaska; fisheries of Exclusive Economic Zone—

Bering Sea and Gulf of Alaska; comments due by 8-20-98; published 7-21-98

COMMODITY FUTURES TRADING COMMISSION

Commodity Exchange Act:

Recordkeeping requirements; electronic storage media and other recordkeeping-related issues; comments due by 8-18-98; published 8-10-98

DEFENSE DEPARTMENT

Acquisition regulations:

Simplified acquisition procedures; comments due by 8-18-98; published 6-19-98

Federal Acquisition Regulation (FAR):

Individuals with disabilities; employment and advancement; comments due by 8-21-98; published 6-22-98

No-cost value engineering change proposals; comments due by 8-21-98; published 6-22-98

ENVIRONMENTAL PROTECTION AGENCY

Air pollutants, hazardous; national emission standards:

Arizona Department of Environmental Quality; authority delegation; comments due by 8-17-98; published 7-17-98

Air pollution control; new motor vehicles and engines:

Light-duty vehicles and trucks—

Heavy-duty engines for original equipment manufacturers and for aftermarket conversion manufacturers; comments due by 8-19-98; published 7-20-98

Air quality implementation plans; √A√approval and promulgation; various States; air quality planning purposes; designation of areas:

Arizona; comments due by 8-21-98; published 7-22-98

Air quality planning purposes; designation of areas:

Idaho; comments due by 8-19-98; published 8-3-98

Airl pollutants, hazardous national emission standards:

Arizona Department of Environmental Quality; authority delegation; comments due by 8-17-98; published 7-17-98

Hazardous waste:

State underground storage tank program approvals—

Nevada; comments due by 8-17-98; published 7-17-98

Tennessee; comments due by 8-20-98; published 7-10-98

FARM CREDIT ADMINISTRATION

Farm credit system:

Funding and fiscal affairs, loan policies and operations, and funding operations—

Investment management; comments due by 8-17-98; published 6-18-98

FEDERAL COMMUNICATIONS COMMISSION

Common carrier services:

Access charges—

Incumbent local exchange carriers subject to rate-of-return regulation; access charge reform; comments due by 8-17-98; published 7-20-98

Commercial mobile radio services—

Broadband personal communications services carriers; forbearance from regulations in wireless telecommunications markets; comments due by 8-18-98; published 8-11-98

Radio and television broadcasting:

Call sign assignments for broadcast stations;

comments due by 8-17-98; published 7-16-98

Radio broadcasting:

Radio technical rules; streamlining; comments due by 8-21-98; published 6-22-98

Radio stations; table of assignments:

Colorado; comments due by 8-17-98; published 7-2-98

Wyoming; comments due by 8-17-98; published 7-2-98

FEDERAL MARITIME COMMISSION

Freedom of Information Act; implementation; comments due by 8-21-98; published 7-22-98

GENERAL SERVICES ADMINISTRATION

Federal Acquisition Regulation (FAR):

Individuals with disabilities; employment and advancement; comments due by 8-21-98; published 6-22-98

No-cost value engineering change proposals; comments due by 8-21-98; published 6-22-98

HEALTH AND HUMAN SERVICES DEPARTMENT

Food and Drug Administration

Food for human consumption:

Chlorine dioxide; comments due by 8-19-98; published 7-20-98

Eggs and egg products—

Farm-to-table safety system; salmonella enteritidis contamination control and reduction; comments due by 8-17-98; published 5-19-98

Human drugs:

Laxative products (OTC); tentative final monograph; comments due by 8-19-98; published 5-21-98

HEALTH AND HUMAN SERVICES DEPARTMENT

Health Care Financing Administration

Medicare:

Rural health professional shortage areas; teleconsultations payment plan; comments due by 8-21-98; published 6-22-98

HEALTH AND HUMAN SERVICES DEPARTMENT

Health insurance reform:

National standard employer identifier; comments due by 8-17-98; published 6-16-98

Protection of human subjects:

Pregnant women, human fetuses, and newborns as research subjects and pertaining to human in vitro fertilization; comments due by 8-18-98; published 5-20-98

HOUSING AND URBAN DEVELOPMENT DEPARTMENT

National Housing Act:

Minimum property standard; 1995 model energy code adoption; comments due by 8-17-98; published 6-16-98

INTERIOR DEPARTMENT

Fish and Wildlife Service

Endangered and threatened species:

Parish's alkali grass; comments due by 8-19-98; published 7-20-98

INTERIOR DEPARTMENT

Surface Mining Reclamation and Enforcement Office

Permanent program and abandoned mine land reclamation plan submissions:

Arkansas; comments due by 8-19-98; published 8-4-98

NATIONAL AERONAUTICS AND SPACE ADMINISTRATION

Federal Acquisition Regulation (FAR):

Individuals with disabilities; employment and advancement; comments due by 8-21-98; published 6-22-98

No-cost value engineering change proposals; comments due by 8-21-98; published 6-22-98

OFFICE OF MANAGEMENT AND BUDGET

Management and Budget Office

Prompt Payment Act; implementation:

Prompt payment procedures; revision and replacement of Circular A-125; comments due by 8-17-98; published 6-17-98

PERSONNEL MANAGEMENT OFFICE

Acquisition regulations:

Health benefits, Federal employees—

Improving carrier performance; conforming changes; comments due by 8-17-98; published 7-16-98

Retirement:

Federal Employees Retirement System—

Open Enrollment Act; implementation; comments due by 8-17-98; published 6-18-98

POSTAL SERVICE

Domestic Mail Manual:

Breast cancer research semi-postal stamp; terms and conditions for use and determination of value; comments due by 8-17-98; published 7-16-98

SECURITIES AND EXCHANGE COMMISSION

Practice and procedure:

Improper professional conduct standards; comments due by 8-20-98; published 7-21-98

TRANSPORTATION DEPARTMENT

Coast Guard

Ports and waterways safety:

Hudson River, NY; safety zone; comments due by 8-19-98; published 5-21-98

San Juan Harbour, PR; regulated navigation area; comments due by 8-17-98; published 6-18-98

Regattas and marine parades:

Eighth Coast Guard District Annual Marine Events; comments due by 8-17-98; published 6-16-98

TRANSPORTATION DEPARTMENT

Federal Aviation Administration

Airworthiness directives:

Airbus; comments due by 8-17-98; published 7-16-98

AlliedSignal, Inc.; comments due by 8-18-98; published 6-19-98

Boeing; comments due by 8-17-98; published 6-18-98

Cessna; comments due by 8-18-98; published 6-26-98

Dornier; comments due by 8-21-98; published 7-22-98

Mooney Aircraft Corp.; comments due by 8-21-98; published 6-17-98

Pratt & Whitney; comments due by 8-17-98; published 6-18-98

Saab; comments due by 8-17-98; published 7-16-98

Short Brothers; comments due by 8-18-98; published 7-24-98

SOCATA-Group Aerospatiale; comments due by 8-20-98; published 7-16-98

Class E airspace; comments due by 8-21-98; published 7-22-98

TRANSPORTATION DEPARTMENT

Federal Highway Administration

Motor carrier safety standards:

Commercial motor vehicle marking; comments due by 8-17-98; published 6-16-98

Waivers, exemptions, and pilot programs; meeting; comments due by 8-20-98; published 7-29-98

LIST OF PUBLIC LAWS

This is a continuing list of public bills from the current session of Congress which have become Federal laws. It may be used in conjunction with ''P L U S'' (Public Laws Update Service) on 202–523–6641. This list is also available online at http://www.nara.gov/fedreg.

The text of laws is not published in the **Federal Register** but may be ordered in ''slip law'' (individual pamphlet) form from the Superintendent of Documents, U.S. Government Printing Office, Washington, DC 20402 (phone, 202–512–1808). The text will also be made available on the Internet from GPO Access at http://www.access.gpo.gov/su_docs/. Some laws may not yet be available.

H.R. 643/P.L. 105–218

To designate the United States courthouse to be constructed at the corner of Superior and Huron Roads, in Cleveland, Ohio, as the ''Carl B. Stokes United States Courthouse''. (Aug. 7, 1998; 112 Stat. 912)

H.R. 1151/P.L. 105–219

Credit Union Membership Access Act (Aug. 7, 1998; 112 Stat. 913)

H.R. 1385/P.L. 105–220

Workforce Investment Act of 1998 (Aug. 7, 1998; 112 Stat. 936)

H.R. 3152/P.L. 105–221

Amy Somers Volunteers at Food Banks Act (Aug. 7, 1998; 112 Stat. 1248)

H.R. 3731/P.L. 105–222

To designate the auditorium located within the Sandia Technology Transfer Center in Albuquerque, New Mexico, as

the ''Steve Schiff Auditorium''. (Aug. 7, 1998; 112 Stat. 1249)

H.R. 4354/P.L. 105–223

To establish the United States Capitol Police Memorial Fund on behalf of the families of Detective John Michael Gibson and Private First Class Jacob Joseph Chestnut of the United States Capitol Police. (Aug. 7, 1998; 112 Stat. 1250)

Last List August 7, 1998

Public Laws Electronic Notification Service (PENS)

PENS is a free electronic mail notification service of newly enacted public laws. To subscribe, send E-mail to **listproc@lucky.fed.gov** with the text message:

subscribe PUBLAWS-L Your Name.

Note: This service is strictly for E-mail notification of new public laws. The text of laws is not available through this service. **PENS** cannot respond to specific inquiries sent to this address.