5–13–98
Vol. 63 No. 92
Pages 26421–26710

federal register

Wednesday
May 13, 1998

Briefings on how to use the Federal Register
For information on briefings in Washington, DC, see announcement on the inside cover of this issue.

Now Available Online via
GPO Access

Free online access to the official editions of the *Federal Register, the Code of Federal Regulations* and other Federal Register publications is available on *GPO Access*, a service of the U.S. Government Printing Office at:

http://www.access.gpo.gov/nara/index.html

For additional information on ***GPO Access*** products, services and access methods, see page II or contact the *GPO Access* User Support Team via:

★ Phone: toll-free: 1-888-293-6498

★ Email: gpoaccess@gpo.gov

The **FEDERAL REGISTER** is published daily, Monday through Friday, except official holidays, by the Office of the Federal Register, National Archives and Records Administration, Washington, DC 20408, under the Federal Register Act (44 U.S.C. Ch. 15) and the regulations of the Administrative Committee of the Federal Register (1 CFR Ch. I). The Superintendent of Documents, U.S. Government Printing Office, Washington, DC 20402 is the exclusive distributor of the official edition.

The **Federal Register** provides a uniform system for making available to the public regulations and legal notices issued by Federal agencies. These include Presidential proclamations and Executive Orders, Federal agency documents having general applicability and legal effect, documents required to be published by act of Congress, and other Federal agency documents of public interest.

Documents are on file for public inspection in the Office of the Federal Register the day before they are published, unless the issuing agency requests earlier filing. For a list of documents currently on file for public inspection, see http://www.nara.gov/fedreg.

The seal of the National Archives and Records Administration authenticates the Federal Register as the official serial publication established under the Federal Register Act. Under 44 U.S.C. 1507, the contents of the **Federal Register** shall be judicially noticed.

The **Federal Register** is published in paper and on 24x microfiche. It is also available online at no charge as one of the databases on GPO Access, a service of the U.S. Government Printing Office.

The online edition of the **Federal Register** is issued under the authority of the Administrative Committee of the Federal Register as the official legal equivalent of the paper and microfiche editions (44 U.S.C. 4101 and 1 CFR 5.10). It is updated by 6 a.m. each day the **Federal Register** is published and it includes both text and graphics from Volume 59, Number 1 (January 2, 1994) forward.

GPO Access users can choose to retrieve online **Federal Register** documents as TEXT (ASCII text, graphics omitted), PDF (Adobe Portable Document Format, including full text and all graphics), or SUMMARY (abbreviated text) files. Users should carefully check retrieved material to ensure that documents were properly downloaded.

On the World Wide Web, connect to the **Federal Register** at http://www.access.gpo.gov/nara. Those without World Wide Web access can also connect with a local WAIS client, by Telnet to swais.access.gpo.gov, or by dialing (202) 512-1661 with a computer and modem. When using Telnet or modem, type swais, then log in as guest with no password.

For more information about GPO Access, contact the GPO Access User Support Team by E-mail at gpoaccess@gpo.gov; by fax at (202) 512–1262; or call (202) 512–1530 or 1–888–293–6498 (toll free) between 7 a.m. and 5 p.m. Eastern time, Monday–Friday, except Federal holidays.

The annual subscription price for the **Federal Register** paper edition is $555, or $607 for a combined **Federal Register,** Federal Register Index and List of CFR Sections Affected (LSA) subscription; the microfiche edition of the **Federal Register** including the Federal Register Index and LSA is $220. Six month subscriptions are available for one-half the annual rate. The charge for individual copies in paper form is $8.00 for each issue, or $8.00 for each group of pages as actually bound; or $1.50 for each issue in microfiche form. All prices include regular domestic postage and handling. International customers please add 25% for foreign handling. Remit check or money order, made payable to the Superintendent of Documents, or charge to your GPO Deposit Account, VISA, MasterCard or Discover. Mail to: New Orders, Superintendent of Documents, P.O. Box 371954, Pittsburgh, PA 15250–7954.

There are no restrictions on the republication of material appearing in the **Federal Register.**

How To Cite This Publication: Use the volume number and the page number. Example: 63 FR 12345.

SUBSCRIPTIONS AND COPIES

PUBLIC	
Subscriptions:	
Paper or fiche	**202–512–1800**
Assistance with public subscriptions	**512–1806**
General online information	**202–512–1530; 1–888–293–6498**
Single copies/back copies:	
Paper or fiche	**512–1800**
Assistance with public single copies	**512–1803**
FEDERAL AGENCIES	
Subscriptions:	
Paper or fiche	**523–5243**
Assistance with Federal agency subscriptions	**523–5243**

FEDERAL REGISTER WORKSHOP

THE FEDERAL REGISTER: WHAT IT IS AND HOW TO USE IT

FOR: Any person who uses the Federal Register and Code of Federal Regulations.

WHO: Sponsored by the Office of the Federal Register.

WHAT: Free public briefings (approximately 3 hours) to present:

1. The regulatory process, with a focus on the Federal Register system and the public's role in the development regulations.
2. The relationship between the Federal Register and Code of Federal Regulations.
3. The important elements of typical Federal Register documents.
4. An introduction to the finding aids of the FR/CFR system.

WHY: To provide the public with access to information necessary to research Federal agency regulations which directly affect them. There will be no discussion of specific agency regulations.

WASHINGTON, DC

WHEN: May 19, 1998 at 9:00 am.

WHERE: Office of the Federal Register
Conference Room
800 North Capitol Street, NW.
Washington, DC
(3 blocks north of Union Station Metro)

RESERVATIONS: 202–523–4538

Printed on recycled paper containing 100% post consumer waste

Contents

Federal Register

Vol. 63, No. 92

Wednesday, May 13, 1998

African Development Foundation
NOTICES
Meetings; Sunshine Act, 26571

Agriculture Department
See Forest Service

Centers for Disease Control and Prevention
NOTICES
Grants and cooperative agreements; availability, etc.:
Fire related injuries prevention programs, 26610–26614
National comprehensive cancer control program, 26614–26620
Tobacco control activities; improvement or initiation, 26620–26621

Coast Guard
RULES
Regattas and marine parades:
River Race Augusta, 26454–26455
PROPOSED RULES
Merchant marine officers and seamen:
Maritime course approval procedures, 26566–26569

Commerce Department
See National Oceanic and Atmospheric Administration

Commodity Futures Trading Commission
NOTICES
Contract market proposals:
Chicago Board of Trade—
Corn and soybeans, 26575–26585

Comptroller of the Currency
NOTICES
Agency information collection activities:
Proposed collection; comment request, 26677–26678
Submission for OMB review; comment request, 26678

Consumer Product Safety Commission
NOTICES
Meetings; Sunshine Act, 26585

Corporation for National and Community Service
RULES
Freedom of Information Act; implementation, 26488–26495

Defense Department
NOTICES
Meetings:
Defense Intelligence Agency Joint Military Intelligence College Board of Visitors, 26585
Defense Intelligence Agency Science and Technology Advisory Board, 26585, 26585
Defense Policy Board Advisory Committee, 26585–26586
Wage Committee, 26586

Education Department
NOTICES
Agency information collection activities:
Submission for OMB review; comment request, 26586

Energy Department
See Energy Efficiency and Renewable Energy Office
See Federal Energy Regulatory Commission
NOTICES
Grants and cooperative agreements; availability, etc.:
Graduate automotive technology education program; automotive technology excellence centers development, 26586–26587
Meetings:
Environmental Management Site-Specific Advisory Board—
Los Alamos National Laboratory, 26587

Energy Efficiency and Renewable Energy Office
NOTICES
Grants and cooperative agreements; availability, etc.:
Partnership for new generation of vehicles; automotive fuel cells, direct injection engines, and fuels; research and development, 26587–26589

Environmental Protection Agency
RULES
Air pollutants, hazardous; national emission standards:
Perchloroethylene emissions from dry cleaning facilities California, 26463–26466
Air quality implementation plans; approval and promulgation; various States:
Maryland, 26462–26463
New Hampshire, 26455–26460
Oregon, 26460–26461
Pesticides; tolerances in food, animal feeds, and raw agricultural commodities:
Bromoxynil, 26473–26481
Diflubenzuron, 26481–26488
N-(4-fluorophenyl)-N-(1-methylethyl)-2-[[5-(trifluoromethyl)-1,3,4-thiadiazol-2-yl]oxy]acetamide, 26472–26473
Pyriproxyfen, 26466–26472
PROPOSED RULES
Air pollutants, hazardous; national emission standards:
Perchloroethylene emissions from dry cleaning facilities California, 26564–26565
Air quality implementation plans; approval and promulgation; various States:
Maryland, 26564
New Hampshire, 26561–26562
New Jersey, 26562–26564
Oregon, 26562
Water pollution control:
Water quality standards—
Alabama, 26565
NOTICES
Pesticide programs:
Federal Insecticide, Fungicide, and Rodenticide Act—
DuPont Agricultural Products; genetically engineered microbial pesticide; small-scale field testing, 26591
Organophosphate alternatives and reduced risk candidates; registration pr iority system changes, 26591–26592
Pesticides; emergency exemptions, etc.:
Carbofuran, 26592–26593

Executive Office of the President
See Presidential Documents

Federal Aviation Administration
RULES
Air traffic operating and flight rules:
Afghanistan; prohibition against certain flights within territory and airspace (SFAR No. 67), 26684–26687
Airworthiness directives:
Alexander Schleicher Segelflugzeugbau, 26425–26426
Bell, 26429–26445
Burkhart Grob Luft-und Raumfahrt, 26427–26429
Construcciones Aeronauticas, S.A., 26426–26427
Airworthiness standards:
Special conditions—
Eurocopter model AS-355 E, F, F1, F2, N Ecureuil II/ Twinstar helicopters, 26422–26424
Class D and Class E airspace, 26445–26446
Class E airspace, 26446–26451
PROPOSED RULES
Airplane operator security:
Screening companies (other than air carriers); certification; withdrawn, 26706
NOTICES
Airport noise compatibility program:
Noise exposure map—
Amarillo International Airport, TX, 26673–26674
Environmental statements; notice of intent:
Piedmont Triad International Airport, NC, 26674
Passenger facility charges; applications, etc.:
New Orleans International Airport, LA, 26674–26675

Federal Communications Commission
RULES
Common carrier services:
Telecommunications Act of 1996; implementation—
Pay telephone reclassification and compensation provisions; AT&T request for limited waiver of per-call compensation obligation, 26495–26497, 26497–26502
Radio services, special:
Personal Communications Services; fixed satelite and local multipoint distribution services, 26502–26508
NOTICES
Agency information collection activities:
Submission for OMB review; comment request, 26593–26595
Reporting and recordkeeping requirements, 26602–26606
Rulemaking proceedings; petitions filed, granted, denied, etc., 26606
Applications, hearings, determinations, etc.:
Arnold, Lewis B., 26595–26596
Perry, Keith, 26596–26598
Ptak, Joesph Frank, 26598–26599
Rabenold, Mark A., 26599–26601
Szoka, Jerry, 26601–26602

Federal Deposit Insurance Corporation
NOTICES
Meetings:
Affordable Housing Advisory Board, 26606

Federal Energy Regulatory Commission
NOTICES
Environmental statements; availability, etc.:
Rivers Electric Co., Inc., 26590
Hydroelectric applications, 26590–26591
Applications, hearings, determinations, etc.:
KN Interstate Gas Transmission Co., 26589
NorAm Gas Transmission Co., 26589–26590

Federal Highway Administration
NOTICES
Agency information collection activities:
Submission for OMB review; comment request, 26675

Federal Housing Finance Board
PROPOSED RULES
Federal home loan bank system:
Bank directors election process, 26532–26560

Federal Reserve System
NOTICES
Banks and bank holding companies:
Change in bank control, 26606
Formations, acquisitions, and mergers, 26606–26607

Federal Trade Commission
NOTICES
Agency information collection activities:
Proposed collection; comment request, 26607–26610

Financial Management Service
See Fiscal Service

Fiscal Service
PROPOSED RULES
Federal agency disbursements:
Federal payments; conversion of checks to electronic funds transfer in two phases; meetings, 26561

Fish and Wildlife Service
RULES
Endangered and threatened species:
Preble's meadow jumping mouse, 26517–26530

Food and Drug Administration
RULES
Administrative practice and procedure:
Drugs composed wholly or partly of insulin; certification regulations removed, 26694–26699
PROPOSED RULES
Administrative practice and procedure:
Drugs composed wholly or partly of insulin; certification regulations removed, 26690–26693

Forest Service
NOTICES
Jursidictional transfers:
Blue Ridge Parkway, Pisgah National Forest, NC, 26571
Meetings:
Scientists Committee, 26571

General Services Administration
RULES
Federal travel:
Per diem localities; maximum lodging and meal allowances, 26488

Health and Human Services Department
See Centers for Disease Control and Prevention
See Food and Drug Administration
See Health Care Financing Administration

Health Care Financing Administration
PROPOSED RULES
Medicare:
Hospital inpatient prospective payment systems and fiscal year 1999 rates
Correction, 26565–26566

Housing and Urban Development Department
PROPOSED RULES
Mortgage and loan insurance programs:
Multifamily mortgagees; electronic reporting requirements, 26702–26704

Indian Affairs Bureau
NOTICES
Liquor and tobacco sale or distribution ordinance:
Stockbridge-Munsee Community Band of Mohican Indians, WI, 26621

Interior Department
See Fish and Wildlife Service
See Indian Affairs Bureau
See Land Management Bureau
See National Park Service
See Reclamation Bureau
See Surface Mining Reclamation and Enforcement Office

Internal Revenue Service
NOTICES
Agency information collection activities:
Proposed collection; comment request, 26678–26681
Meetings:
Income tax software developers; electronic filing of Form 1065 (U.S. partnership return of income), 26681–26682

International Trade Commission
NOTICES
Import investigations:
Andean Trade Preference Act; effect on U.S. economy and on Andean drug crop eradication; annual report (1997), 26624
Carribean Basin Economic Recovery Act; impact on U.S. industries and consumers; annual report, 26624–26625
CD-ROM controllers and products containing same, 26625–26626
Coated optical waveguide fibers and products containing same, 26626–26627

Justice Department
See Justice Programs Office
See National Institute of Corrections
NOTICES
Pollution control; consent judgments:
American Recovery Co. et al., 26627
Clark Fork Pend Oreille Coalition et al., 26627–26628
Foxley Cattle Co. et al., 26628
Texaco Pipeline, Inc., et al., 26628

Justice Programs Office
NOTICES
Agency information collection activities:
Proposed collection; comment request, 26629

Land Management Bureau
NOTICES
Meetings:
El Centro Field Office, CA; wilderness management; planning initiation, 26621

National Highway Traffic Safety Administration
RULES
Rulemaking procedures:
Motor vehicle safety standards; international harmonization activities, 26508–26517

National Institute of Corrections
NOTICES
Grants and cooperative agreements; availability, etc.:
Management of institution mission change project, 26629–26630
Meetings:
Advisory Board, 26630

National Oceanic and Atmospheric Administration
PROPOSED RULES
Fishery conservation and management:
Magnuson-Stevens Act provisions—
Essential fish habitat, 26570
NOTICES
Grants and cooperative agreements; availability, etc.:
Sea grant industry fellows program, 26571–26574
Permits:
Marine mammals, 26574

National Park Service
NOTICES
Environmental statements; availability, etc.:
World War II Memorial, Washington, DC, 26621–26622
Jurisdictional transfers:
Blue Ridge Parkway, Pisgah National Forest, NC, 26571
National Register of Historic Places:
Pending nominations, 26622–26623
Native American human remains and associated funerary objects:
Fishlake National Forest, UT; inventory from Gooseberry Valley, UT, 26623

Nuclear Regulatory Commission
NOTICES
Enforcement actions policy and procedure; revision, 26630–26652
Environmental statements; availability, etc.:
Omaha Public Power District, 26653
Transnuclear, Inc., 26653–26655
Meetings:
Babcock & Wilcox Shallow Land Disposal Area, PA; decommissioning, 26655–26656
Meetings; Sunshine Act, 26656
Reports and guidance documents; availability, etc.:
Nuclear power reactors decommissioning; staff responses to frequently asked questions; correction, 26656
Applications, hearings, determinations, etc.:
Pennsylvania Power & Light Co.; correction, 26630

Personnel Management Office
RULES
Employment:
Reduction in force—
Initial retirement eligibility establishment and health benefits continance; annual leave use, 26421–26422

PROPOSED RULES
Employment:
Reduction in force—
Vacant position offers; retention regulations, 26531

Presidential Documents
EXECUTIVE ORDERS
Committees; establishment, renewal, termination, etc.:
Mexican-United States Defense Commission, Joint; amendment (EO 13082), 26709

Public Debt Bureau
See Fiscal Service

Public Health Service
See Centers for Disease Control and Prevention
See Food and Drug Administration

Reclamation Bureau
NOTICES
Meetings:
Trinity River Basin Fish and Wildlife Task Force, 26623–26624

Securities and Exchange Commission
NOTICES
Self-regulatory organizations; proposed rule changes:
Chicago Board Options Exchange, Inc., 26657–26660
New York Stock Exchange, Inc., 26660–26662
Pacific Exchange, Inc., 26662–26666
Philadelphia Stock Exchange, Inc., 26666–26668

State Department
NOTICES
Meetings:
International agreement through United Nations environment program on persistent organic pollutants; preparations, 26668–26670

Surface Mining Reclamation and Enforcement Office
RULES
Permanent program and abandoned mine land reclamation plan submissions:
Maryland, 26451–26454

Surface Transportation Board
NOTICES
Railroad services abandonment:
CSX Transportation, Inc., 26675–26676
Iowa Interstate Railroad, Ltd., 26676
Sea Lion Railroad, 26676–26677

Transportation Department
See Coast Guard
See Federal Aviation Administration
See Federal Highway Administration
See National Highway Traffic Safety Administration
See Surface Transportation Board
NOTICES
Agency information collection activities:
Submission for OMB review; comment request, 26670–26673

Treasury Department
See Comptroller of the Currency
See Fiscal Service
See Internal Revenue Service

Veterans Affairs Department
RULES
Vocational rehabilitation and education:
Veterans education—
Service Members Occupational Conversion and Training Act; certification deadlines, 26455

Separate Parts In This Issue

Part II
Department of Transportation, Federal Aviation Administration, 26684–26687

Part III
Department of Health and Human Services, Food and Drug Administration, 26690–26699

Part IV
Department of Housing and Urban Development, 26702–26704

Part V
Department of Transportation, Federal Aviation Administration, 26706

Part VI
The President, 26709

Reader Aids
Consult the Reader Aids section at the end of this issue for phone numbers, online resources, finding aids, reminders, and notice of recently enacted public laws.

CFR PARTS AFFECTED IN THIS ISSUE

A cumulative list of the parts affected this month can be found in the Reader Aids section at the end of this issue.

3 CFR

Executive Orders:

EO 9080 (amended by EO 13082).....26709
EO 10692 (see EO 13082).....26709
12377 (see EO 13082).....26709
13082.....26709

5 CFR

351.....26421
630.....26421

Proposed Rules:

351.....26531

12 CFR

Proposed Rules:

922.....26532
931.....26532
933.....26532
934.....26532
941.....26532

14 CFR

21.....26422
27.....26422
39 (5 documents) 26425, 26426, 26427, 26429, 26439
71 (21 documents) 26445, 26446, 26447, 26448, 26449, 26450, 26451
91.....26684

Proposed Rules:

108.....26706

21 CFR

3.....26690
5.....26690
10.....26690
16.....26690
25.....26690
50.....26690
56.....26690
58.....26690
71.....26690
200.....26690
201.....26690
207.....26690
210.....26690
211.....26690
310.....26690
312.....26690
314.....26690
369.....26690
429.....26690
800.....26690
812.....26690

Proposed Rules:

3.....26694
5.....26694
10.....26694
16.....26694
25.....26694
50.....26694
56.....26694
58.....26694
71.....26694
200.....26694
201.....26694
207.....26694
210.....26694
211.....26694
310.....26694
312.....26694
314.....26694
369.....26694
429.....26694
800.....26694
812.....26694

24 CFR

Proposed Rules:

200.....26702
207.....26702

30 CFR

920.....26451

31 CFR

Proposed Rules:

208.....26561

33 CFR

100.....26454

38 CFR

21.....26455

40 CFR

52 (3 documents) 26455, 26460, 26462
63.....26463
180 (4 documents) 26466, 26472, 26473, 26481

Proposed Rules:

52 (4 documents) 26561, 26562, 26564
63.....26564
131.....26565

41 CFR

Ch. 301.....26488

42 CFR

Proposed Rules:

405.....26565
412.....26565
413.....26565

45 CFR

1215.....26488
2507.....26488

46 CFR

Proposed Rules:

1.....26566
10.....26566

47 CFR

69 (2 documents) 26495, 26497
101.....26502

49 CFR

553.....26508

50 CFR

17.....26517

Proposed Rules:

600.....26570

Rules and Regulations

Federal Register
Vol. 63, No. 92
Wednesday, May 13, 1998

This section of the FEDERAL REGISTER contains regulatory documents having general applicability and legal effect, most of which are keyed to and codified in the Code of Federal Regulations, which is published under 50 titles pursuant to 44 U.S.C. 1510.

The Code of Federal Regulations is sold by the Superintendent of Documents. Prices of new books are listed in the first FEDERAL REGISTER issue of each week.

OFFICE OF PERSONNEL MANAGEMENT

5 CFR Parts 351 and 630

RIN 3206–AH64

Reduction in Force and Mandatory Exceptions

AGENCY: Office of Personnel Management.

ACTION: Final rulemaking.

SUMMARY: The Office of Personnel Management (OPM) is issuing final regulations that implement legislation giving employees the right to use annual leave to establish initial retirement eligibility for employees in reduction in force and other restructuring situations. These regulations also implement related provisions concerning the availability of annual leave to qualify for continuance of health benefits in the same situation.

DATES: These regulations are effective June 12, 1998.

FOR FURTHER INFORMATION CONTACT: (part 351) Thomas A. Glennon or Jacqueline R. Yeatman, (202) 606–0960, FAX (202) 606–2329; (part 630) Jo Ann Perrini, (202) 606–2858, FAX (202) 606–0824.

SUPPLEMENTARY INFORMATION:

Background

On March 10, 1997, OPM published interim regulations at 62 FR 10681 to implement section 634 of the Treasury, Postal Service, and General Government Appropriations Act, 1997, as contained in section 101(f) of the Omnibus Consolidated Appropriations Act, 1997 (P.L. 104–208, approved September 30, 1996). Section 634 of the Act is codified in 5 U.S.C. 6302(g).

The regulations were effective upon publication in the **Federal Register**. Interested parties could submit written comments to OPM concerning the regulations in the 60 day period following publication of the regulations.

As authorized by section 634 of the Act, the interim regulations provide that an employee who has received a specific notice of involuntary separation by reduction in force, or by adverse action after declining relocation (including transfer of function), has the right to use annual leave past the effective date the employee would otherwise have been separated in order to establish initial eligibility for immediate retirement, including discontinued service or voluntary early retirement. The same option is also available for the employee to acquire initial eligibility for continuation of health benefits into retirement.

Comments

OPM received four comments, all from Federal agencies, on the interim regulations.

One agency concurred with the regulations as published.

The second agency asks that sections 351.606(b) (1) and (2), and section 351.608(e)(1), be revised to specify that an agency must elect to provide voluntary early retirement authority in order for an employee retained under Section 634 to separate under that early retirement option.

After reviewing the regulations, no further revision was made because even without the voluntary early retirement option, the employee would still have the right to separate under the discontinued service retirement option.

The third agency asked that 5 CFR part 630 be revised to provide that an employee retained under section 634 of the Act would not be required to return to duty for the last day of employment in order to receive a lump sum payment for terminal leave. Specifically, the agency commented that under 5 U.S.C. 5551, the employee would be entitled to a lump-sum payment for the annual leave earned during this period of terminal leave.

The agency stated that a previous Comptroller General opinion required that an employee on terminal leave report for duty on his or her last workday to receive leave credit (B–223876, June 12, 1987). The agency recommended that OPM waive the requirement that an employee on terminal leave must return to duty on his or her last workday in order to accrue annual leave for that period so as to allow such annual leave to be included in a lump-sum payment.

Under 5 U.S.C. 6302(g), Congress specifically provided employees an entitlement to elect to use their annual leave to remain on the agency's rolls for the time needed to establish initial eligibility for immediate retirement and/or to acquire eligibility to continue health benefits into retirement. There is no statutory requirement that employees must return to work on their last workday in order to accrue annual leave for the period of absence. For purposes of § 630.212, an employee continues to accrue annual leave while in a paid leave status. We do not believe a waiver or a new regulatory provision is necessary, since the entitlement in 5 U.S.C. 6302(b) supersedes any previous Comptroller General opinion to the contrary.

The fourth agency asks for clarification of 5 CFR part 630 concerning whether a leave recipient would be permitted to continue to use donated annual leave if the medical emergency that served as the basis for the donated leave ends before the employee attains first eligibility for benefits under section 634 of the Act.

In section 630.212(b)(3), an agency may permit an approved leave recipient to use any or all donated annual leave made available to the employee under the agency's voluntary leave transfer and/or leave bank programs for the purpose of establishing initial retirement eligibility and/or qualifying for continuance of health benefits.

Under § 630.910(d), an agency may deem a medical emergency to continue for the purpose of providing a leave recipient an adequate period of time within which to receive donations of annual leave (e.g., to permit retroactive substitution of donated annual leave for any advance leave or leave without pay taken during the medical emergency or to arrange for or attend the funeral of the family member affected by the medical emergency). However, § 630.910(c) states that when a medical emergency terminates, no further requests for donated annual leave may be granted and any unused donated annual leave must be returned to the leave donor(s). Therefore, if a medical emergency terminates prior to establishing initial retirement eligibility and/or qualifying for continuance of health benefits, the employee may not continue to use donated annual leave. Agencies are responsible for continuously monitoring

the status of a medical emergency affecting a leave recipient to ensure that the leave recipient continues to be affected by the medical emergency. We encourage agencies to verify the status of a medical emergency before granting approval to a leave recipient to use any and all donated annual leave for the purpose of establishing initial retirement eligibility and/or qualifying for continuance of health benefits.

Final Regulations

After consideration of all comments, the interim regulations published at 62 FR 10681 are published as final regulations without further revision.

Regulatory Flexibility Act

I certify that this regulation will not have a significant economic impact on a substantial number of small entities because it only affects Federal employees.

List of Subjects in Parts 351 and 630

Administrative practice and procedure, Government employees.

U.S. Office of Personnel Management.

Janice R. Lachance,

Director.

Accordingly, the interim rule published March 10, 1997 (62 FR 10681) is adopted as final without change.

[FR Doc. 98–12632 Filed 5–12–98; 8:45 am]

BILLING CODE 6325–01–P

DEPARTMENT OF TRANSPORTATION

Federal Aviation Administration

14 CFR Parts 21 and 27

[Docket No. SW003; Special Conditions No. 27–003–SC]

Special Conditions: Eurocopter Model AS–355 E, F, F1, F2, N ''Ecureuil II/ Twinstar'' Helicopters, Electronic Flight Instruments

AGENCY: Federal Aviation Administration (FAA), DOT.

ACTION: Final special condition; request for comments.

SUMMARY: This special condition is issued for the Eurocopter Model AS–355 E, F, F1, F2, N ''Ecureuil II/Twinstar'' helicopters. These helicopters will have a novel or unusual design feature associated with the Electronic Flight Instruments. The applicable airworthiness regulations do not contain adequate or appropriate safety standards to protect systems that perform critical control functions, or provide critical displays, from the effects of high-intensity radiated fields (HIRF). This special condition contains the additional safety standards that the Administrator considers necessary to ensure that critical functions of systems will be maintained when exposed to HIRF.

DATES: The effective date of this special condition is April 30, 1998. Comments must be received on or before July 13, 1998.

ADDRESSES: Comments on this special condition may be mailed in duplicate to: Federal Aviation Administration, Office of the Regional Counsel, Attention: Rules Docket No. SW003, Fort Worth, Texas 76193–0007 or deliver in duplicate to the Office of the Regional Counsel at 2601 Meacham Blvd., Fort Worth, Texas 76137. Comments must be marked: Rules Docket No. SW003. Comments may be inspected in the Rules Docket weekdays, except Federal holidays, between 8:30 a.m. and 4:00 p.m.

FOR FURTHER INFORMATION CONTACT: Robert McCallister, FAA, Rotorcraft Directorate, Regulations Group, Fort Worth, Texas 76193–0111; telephone 817–222–5121, fax 817–222–5961.

SUPPLEMENTARY INFORMATION: The FAA has determined that notice and opportunity for prior public comment hereon are impracticable because these procedures would significantly delay issuance of the approval design and thus delivery of the affected aircraft. In addition, notice and opportunity for prior public comment are unnecessary since the substance of this special condition has been subject to the public comment process in several prior instances with no substantive comments received. The FAA therefore finds that good cause exists for making this special condition effective upon issuance.

Comments Invited

Interested persons are invited to submit such written data, views, or arguments as they may desire. Communications should identify the regulatory docket or special condition number and be submitted in duplicate to the address specified above. All communications received on or before the closing date for comments will be considered by the Administrator. The special condition may be changed in light of the comments received. All comments received will be available in the Rules Docket for examination by interested persons, both before and after the closing date for comments. A report summarizing each substantive public contact with FAA personnel concerning this rulemaking will be filed in the docket. Commenters wishing the FAA to acknowledge receipt of their comments submitted in response to this special condition must include a self-addressed, stamped postcard on which the following statement is made: ''Comments to Rules Docket No. SW003.'' The postcard will be date stamped and returned to the commenter.

Background

On February 25, 1998, American Eurocopter announced their intent to amend, under their Designated Airworthiness Authority (DAS), the Supplemental Type Certificate (STC) SH7714AW–D to add electronic flight instruments, including an Attitude Display Instrument. This amendment and the original STC are effective for the Models AS–355 E, F, F1, F2, N ''Ecureuil II/Twinstar'' helicopters. These are normal category five-passenger helicopters powered by two Allison 250–C20 engines for the Model AS–355 E, F, F1, F2 helicopters and by two Turbomeca Arrius 1A engines for the Model AS–355 N helicopters.

Type Certification Basis

Under the provisions of 14 CFR 21.101, Eurocopter must show that the Model AS–355 E, F, F1, F2, N ''Ecureuil II/Twinstar'' helicopters meet the applicable provisions of the regulations incorporated by reference in Type Certificate Data Sheet (TCDS) No. H11EU or the applicable regulations in effect on the date of notification of intent to change the Models AS–355 E, F, F1, F2, N. The regulations incorporated by reference in the type certificate are commonly referred to as the ''original type certification basis.'' The regulations incorporated by reference in H11EU are as follows: § 21.29 and, for Models AS–355 E, F, F1, F2, 14 CFR part 27, effective February 1, 1965 plus Amendments 27–1 through 27–16; for Model AS–355 N, part 27, effective February 1, 1965, plus Amendments 27–1 through 27–20, and the following sections of Amendment 27–1: 27.21, 27.45, 27.71, 27.79, 27.143, 27.151, 27.161, 27.173, 27.175, 27.177, 27.672, 27.673, 27.729, 27.735, 27.779, 27.807, 27.1329, 27.1413, 27.1519, 27.1525, 27.1555, 27.1585, and 27.1587. In addition, the certification basis includes certain other special conditions.

If the Administrator finds that the applicable airworthiness regulations do not contain adequate or appropriate safety standards for these helicopters because of a novel or unusual design feature, special conditions are prescribed under the provisions of § 21.16.

In addition to the applicable airworthiness regulations and special conditions, the Models AS–355 E, F, F1, F2, N must comply with the noise certification requirements of 14 CFR part 36; and the FAA must issue a finding of regulatory adequacy pursuant to section 611 of Public Law 92–574, the ''Noise Control Act of 1972.''

Special conditions, as appropriate, are issued in accordance with § 11.49, as required by §§ 11.28 and 11.29(b), and become part of the type certification basis in accordance with § 21.101(b)(2).

Special conditions are initially applicable to the model for which they are issued. Should the type certificate for that model be amended later to include any other model that incorporates the same novel or unusual design feature, or should any other model already included on the same type certificate be modified to incorporate the same novel or unusual design feature, the special conditions would also apply to the other model under the provisions of § 21.101(a)(1).

Novel or Unusual Design Features

The Eurocopter Model AS–355 E, F, F1, F2, N ''Ecureuil II/Twinstar'' helicopters will incorporate the following novel or unusual design features: Electrical, electronic, or combination of electrical electronic (electrical/electronic) systems, such as electronic flight instruments, that will be providing displays critical to the continued safe flight and landing of the helicopter. Electronic flight instruments provide information critical for operation in instrument meteorological conditions.

Discussion

The Eurocopter Model AS–355 E, F, F1, F2, N ''Ecureuil II/Twinstar'' helicopters, at the time of application, were identified as having modifications that incorporate one and possibly more electrical/electronic systems, such as electronic flight instruments. After the design is finalized, Eurocopter will provide the FAA with a preliminary hazard analysis that will identify any other critical functions, required for safe flight and landing, performed by the electrical/electronic systems.

Recent advances in technology have given rise to the application in aircraft designs of advanced electrical/electronic systems that perform critical control functions, or provide critical displays. These advanced systems respond to the transient effects of induced electrical current and voltage caused by HIRF incident on the external surface of the helicopter. These induced transient currents and voltages can degrade the performance of the electrical/electronic systems by damaging the components or by upsetting the systems' functions.

Furthermore, the electromagnetic environment has undergone a transformation not envisioned by the current application of § 27.1309(a). Higher energy levels radiate from operational transmitters currently used for radar, radio, and television. Also, the number of transmitters has increased significantly.

Existing aircraft certification requirements are inappropriate in view of these technological advances. In addition, the FAA has received reports of some significant safety incidents and accidents involving military aircraft equipped with advanced electrical/electronic systems when they were exposed to electromagnetic radiation.

The combined effects of the technological advances in helicopter design and the changing environment have resulted in an increased level of vulnerability of the electrical/electronic systems required for the continued safe flight and landing of the helicopter. Effective measures to protect these helicopters against the adverse effects of exposure to HIRF will be provided by the design and installation of these systems. The following primary factors contributed to the current conditions: (1) Increased use of sensitive electronics that perform critical functions, (2) reduced electromagnetic shielding afforded helicopter systems by advanced technology airframe materials, (3) adverse service experience of military aircraft using these technologies, and (4) an increase in the number and power of radio frequency emitters and the expected increase in the future.

The FAA recognizes the need for aircraft certification standards to keep pace with the developments in technology and environment and, in 1986, initiated a high priority program to (1) determine and define electromagnetic energy levels; (2) develop and describe guidance material for design, test, and analysis; and (3) prescribe and promulgate regulatory standards.

The FAA participated with industry and airworthiness authorities of other countries to develop internationally recognized standards for certification.

The FAA and airworthiness authorities of other countries have identified two levels of the HIRF environment that a helicopter could be exposed to, one environment for Visual Flight Rules (VFR) operations and a different environment for Instrument Flight Rules (IFR) operations. While the HIRF rulemaking requirements are being finalized, the FAA is adopting a special condition for the certification of aircraft that employ electrical/electronic systems that perform critical control functions, or provides critical displays. The accepted maximum energy levels that civilian helicopter system installations must withstand for safe operation are based on surveys and analysis of existing radio frequency emitters. This special condition will require the helicopters' electrical/electronic systems and associated wiring to be protected from these energy levels. These external threat levels are believed to represent the exposure for a helicopter operating under VFR or IFR.

Compliance with HIRF requirements will be demonstrated by tests, analysis, models, similarity with existing systems, or a combination of these methods. Service experience alone will not be acceptable since such experience in normal flight operations may not include an exposure to HIRF. Reliance on a system with similar design features for redundancy, as a means of protection against the effects of external HIRF, is generally insufficient because all elements of a redundant system are likely to be concurrently exposed to the radiated fields.

This special condition will require the systems that perform critical control functions, or provide critical displays, as installed in the aircraft, to meet certain standards based on either a defined HIRF environment or a fixed value using laboratory tests. Control system failures and malfunctions can more directly and abruptly contribute to a catastrophic event than display system failures and malfunctions. Therefore, it is considered appropriate to require more rigorous HIRF verification methods for critical control systems than for critical display systems.

The applicant may demonstrate that the operation and operational capabilities of the installed electrical/electronic systems that perform critical functions are not adversely affected when the aircraft is exposed to the defined HIRF test environment. The FAA has determined that the test environment defined in Table 1 is acceptable for critical control functions in helicopters. The test environment defined in Table 2 is acceptable for critical display systems in helicopters.

The applicant may also demonstrate by a laboratory test that the electrical/electronic systems that perform critical control functions or provide critical displays can withstand a peak electromagnetic field strength in a frequency range of 10 KH_z to 18 GH_z. If a laboratory test is used to show

compliance with the defined HIRF environment, no credit will be given for signal attenuation due to installation. A level of 100 volts per meter (v/m) is appropriate for critical display systems. A level of 200 v/m is appropriate for critical control functions. Laboratory test levels are defined according to RTCA/DO–160D Section 20 Category W (100 v/m and 150 mA) and Category Y (200 v/m and 300 mA). As defined in DO–160D Section 20, the test levels are defined as the peak of the root means squared (rms) envelope. As a minimum, the modulations required for RTCA/DO–160D Section 20 Categories W and Y will be used. Other modulations should be selected as the signal most likely to disrupt the operation of the system under test, based on its design characteristics. For example, flight control systems may be susceptible to 3 H_z square wave modulation while the video signals for electronic display systems may be susceptible to 400 H_z sinusoidal modulation. If the worst-case modulation is unknown or cannot be determined, default modulations may be used. Suggested default values are a 1 KHz sine wave with 80 percent depth of modulation in the frequency range from 10 KHz to 400 MHz and 1 KHz square wave with greater than 90 percent depth of modulation from 400 MH_z to 18 GH_z. For frequencies where the unmodulated signal would cause deviations from normal operation, several different modulating signals with various waveforms and frequencies should be applied.

Applicants must perform a preliminary hazard analysis to identify electrical/electronic systems that perform critical functions. The term ''critical'' means those functions whose failure would contribute to or cause an unsafe condition that would prevent the continued safe flight and landing of the helicopters. The systems identified by the hazard analysis as performing critical functions are required to have HIRF protection. A system may perform both critical and noncritical functions. Primary electronic flight display systems and their associated components perform critical functions such as attitude, altitude, and airspeed indications. HIRF requirements would apply only to the systems that perform critical functions, including control and display.

Acceptable system performance would be attained by demonstrating that the critical function components of the system under consideration continue to perform their intended function during and after exposure to required electromagnetic fields. Deviations from system specifications may be acceptable but must be independently assessed by the FAA on a case-by-case basis.

TABLE 1.—VFR ROTORCRAFT, FIELD STRENGTH VOLTS/METER

Frequency	Peak	Average
10–100 KH_z	150	150
100–500	200	200
500–2000	200	200
2–30 MH_z	200	200
30–100	200	200
100–200	200	200
200–400	200	200
400–700	730	200
700–1000	1400	240
1–2 GH_z	5000	250
2–4	6000	490
4–6	7200	400
6–8	1100	170
8–12	5000	330
12–18	2000	330
18–40	1000	420

TABLE 2.—IFR ROTORCRAFT FIELD STRENGTH VOLTS/METER

Frequency	Peak	Average
10–100 KH_z	50	50
100–500	50	50
500–2000	50	50
2–30 MH_z	100	100
30–70	50	50
70–100	50	50
100–200	100	100
200–400	100	100
400–700	700	50
700–1000	700	100
1–2 GH_z	2000	200
2–4	3000	200
4–6	3000	200
6–8	1000	200
8–12	3000	300
12–18	2000	200
18–40	600	200

Applicability

As previously discussed, this special condition is applicable to the Model AS–355 E, F, F1, F2, N helicopters. Should American Eurocopter apply at a later date for a change to the type certificate to include another model incorporating the same novel or unusual design feature, the special condition would apply to that model as well under the provisions of § 21.101(a)(1).

Conclusion

This action affects only certain novel or unusual design features on one model series of helicopter. It is not a rule of general applicability and affects only the applicant who applied to the FAA for approval of these features on the helicopter.

The substance of this special condition has been subjected to the notice and comment period in several prior instances and has been derived without substantive change from those previously issued. It is unlikely that prior public comment would result in a significant change from the substance contained herein. For this reason and because a delay would significantly affect the certification of the helicopter, which is imminent, the FAA has determined that prior public notice and comment are unnecessary and impracticable, and good cause exists for adopting this special condition upon issuance. The FAA is requesting comments to allow interested persons to submit views that may not have been submitted in response to the prior opportunities for comment described above.

List of Subjects in 14 CFR Parts 21 and 27

Aircraft, Air transportation, Aviation safety, Rotorcraft, Safety.

The authority citation for these special conditions is as follows: 42 U.S.C. 7572; 49 U.S.C. 106(g), 40105, 40113, 44701–44702, 44704, 44709, 44711, 44713, 44715, 45303.

The Special Condition

Accordingly, pursuant to the authority delegated to me by the Administrator, the following special condition is issued as part of the type certification basis for Eurocopter Models AS 355 E, F, F1, F2, N ''Ecureuil II/Twinstar'' helicopters.

Protection for Electrical and Electronic Systems from High Intensity Radiated Fields.

Each system that performs critical functions must be designed and installed to ensure that the operation and operational capabilities of these critical functions are not adversely affected when the helicopter is exposed to high intensity radiated fields external to the helicopter.

Issued in Fort Worth, Texas, on April 30, 1998.

Eric Bries,

Acting Manager, Rotorcraft Directorate Aircraft Certification Service, ASW–100.

[FR Doc. 98–12710 Filed 5–12–98; 8:45 am]

BILLING CODE 4910–13–U

DEPARTMENT OF TRANSPORTATION

Federal Aviation Administration

14 CFR Part 39

[Docket No. 97–CE–103–AD; Amendment 39–10518; AD 98–10–07]

RIN 2120–AA64

Airworthiness Directives; Alexander Schleicher Segelflugzeugbau Model ASK 21 Sailplanes

AGENCY: Federal Aviation Administration, DOT.

ACTION: Final rule.

SUMMARY: This amendment adopts a new airworthiness directive (AD) that applies to all Alexander Schleicher Segelflugzeugbau (Alexander Schleicher) Model ASK 21 sailplanes that have certain modifications installed. This AD requires changing the sailplane flight manual's weight and balance information. This AD is the result of mandatory continuing airworthiness information (MCAI) issued by the airworthiness authority for Germany. The actions specified by this AD are intended to prevent the operator from using inaccurate weight and balance information provided in the sailplane flight manual (SFM), which could lead to hazardous flight conditions.

DATES: Effective June 26, 1998.

The incorporation by reference of certain publications listed in the regulations is approved by the Director of the Federal Register as of June 26, 1998.

ADDRESSES: Service information that applies to this AD may be obtained from Alexander Schleicher, Segelflugzeugbau, 6416 Poppenhausen, Wasserkuppe, Federal Republic of Germany; telephone: 49.6658.890 or 49.6658.8920; facsimile: 49.6658.8923 or 49.6658.8940. This information may also be examined at the Federal Aviation Administration (FAA), Central Region, Office of the Regional Counsel, Attention: Rules Docket No. 97–CE–103–AD, Room 1558, 601 E. 12th Street, Kansas City, Missouri 64106; or at the Office of the Federal Register, 800 North Capitol Street, NW, suite 700, Washington, DC.

FOR FURTHER INFORMATION CONTACT: Mr. J. Mike Kiesov, Project Officer, Sailplanes/Gliders, Small Airplane Directorate, Aircraft Certification Service, FAA, 1201 Walnut, suite 900, Kansas City, Missouri 64106; telephone: (816) 426–6932; facsimile: (816) 426–2169.

SUPPLEMENTARY INFORMATION:

Events Leading to the Issuance of This AD

A proposal to amend part 39 of the Federal Aviation Regulations (14 CFR part 39) to include an AD that would apply to all Alexander Schleicher Model ASK 21 sailplanes was published in the **Federal Register** as a notice of proposed rulemaking (NPRM) on February 12, 1998 (63 FR 7083). The NPRM proposed to require changing the SFM by replacing two pages referencing the trim weight information. Accomplishment of the proposed installation would be in accordance with the Action section of Alexander Schleicher Technical Note No. 13 a, dated June 4, 1984.

The NPRM was the result of mandatory continuing airworthiness information (MCAI) issued by the airworthiness authority for Germany.

Interested persons have been afforded an opportunity to participate in the making of this amendment. No comments were received on the proposed rule or the FAA's determination of the cost to the public.

The FAA's Determination

After careful review of all available information related to the subject presented above, the FAA has determined that air safety and the public interest require the adoption of the rule as proposed except for minor editorial corrections. The FAA has determined that these minor corrections will not change the meaning of the AD and will not add any additional burden upon the public than was already proposed.

Cost Impact

The FAA estimates that 30 sailplanes in the U.S. registry will be affected by this AD, that it will take approximately 1 workhour per sailplane to accomplish this action, and that the average labor rate is approximately $60 an hour. There are no parts required for this action. This action may be performed by the owner/operator holding at least a private pilot certificate as authorized by section 43.7 of the Federal Aviation Regulations (14 CFR 43.7), and must be entered into the aircraft records showing compliance with this AD in accordance with section 43.9 of the Federal Aviation Regulations (14 CFR 43.9). Based on these figures, there is no cost impact of this AD on U.S. operators.

Regulatory Impact

The regulations adopted herein will not have substantial direct effects on the States, on the relationship between the national government and the States, or on the distribution of power and responsibilities among the various levels of government. Therefore, in accordance with Executive Order 12612, it is determined that this final rule does not have sufficient federalism implications to warrant the preparation of a Federalism Assessment.

For the reasons discussed above, I certify that this action (1) is not a ''significant regulatory action'' under Executive Order 12866; (2) is not a ''significant rule'' under DOT Regulatory Policies and Procedures (44 FR 11034, February 26, 1979); and (3) will not have a significant economic impact, positive or negative, on a substantial number of small entities under the criteria of the Regulatory Flexibility Act. A copy of the final evaluation prepared for this action is contained in the Rules Docket. A copy of it may be obtained by contacting the Rules Docket at the location provided under the caption **ADDRESSES**.

List of Subjects in 14 CFR Part 39

Air transportation, Aircraft, Aviation safety, Incorporation by reference, Safety.

Adoption of the Amendment

Accordingly, pursuant to the authority delegated to me by the Administrator, the Federal Aviation Administration amends part 39 of the Federal Aviation Regulations (14 CFR part 39) as follows:

PART 39—AIRWORTHINESS DIRECTIVES

1. The authority citation for part 39 continues to read as follows:

Authority: 49 U.S.C. 106(g), 40113, 44701.

§ 39.13 [Amended]

2. Section 39.13 is amended by adding a new airworthiness directive (AD) to read as follows:

98–10–07 Alexander Schleicher Segelflugzeugbau: Amendment 39–10518; Docket No. 97–CE–103–AD.

Applicability: Model ASK 21 sailplanes, all serial numbers, certificated in any category, that are equipped with the modifications in Alexander Schleicher Technical Note (TN) 3 or TN 7.

Note 1: This AD applies to each sailplane identified in the preceding applicability provision, regardless of whether it has been modified, altered, or repaired in the area subject to the requirements of this AD. For sailplanes that have been modified, altered, or repaired so that the performance of the requirements of this AD is affected, the owner/operator must request approval for an alternative method of compliance in accordance with paragraph (d) of this AD. The request should include an assessment of the effect of the modification, alteration, or repair on the unsafe condition addressed by this AD; and, if the unsafe condition has not

been eliminated, the request should include specific proposed actions to address it.

Compliance: Required within the next 3 calendar months after the effective date of this AD, unless already accomplished.

To prevent the operator from using inaccurate weight and balance information provided in the sailplane flight manual (SFM), which could lead to hazardous flight conditions, accomplish the following:

(a) Replace page 2 (dated May 16, 1984) and page 13 (dated February 16, 1984) from the Alexander Schleicher Model ASK 21 SFM with new pages 2 and 13, both dated June 4, 1984, in accordance with Alexander Schleicher ASK 21 Technical Note No. 13 a, dated June 4, 1984.

(b) Incorporating the SFM revisions, as required by this AD, may be performed by the owner/operator holding at least a private pilot certificate as authorized by section 43.7 of the Federal Aviation Regulations (14 CFR 43.7), and must be entered into the aircraft records showing compliance with this AD in accordance with section 43.9 of the Federal Aviation Regulations (14 CFR 43.9).

(c) Special flight permits may be issued in accordance with sections 21.197 and 21.199 of the Federal Aviation Regulations (14 CFR 21.197 and 21.199) to operate the sailplane to a location where the requirements of this AD can be accomplished.

(d) An alternative method of compliance or adjustment of the compliance time that provides an equivalent level of safety may be approved by the Manager, Small Airplane Directorate, Aircraft Certification Service, 1201 Walnut, suite 900, Kansas City, Missouri 64106. The request shall be forwarded through an appropriate FAA Maintenance Inspector, who may add comments and then send it to the Manager, Small Airplane Directorate.

Note 2: Information concerning the existence of approved alternative methods of compliance with this AD, if any, may be obtained from the Small Airplane Directorate.

(e) Questions or technical information related to Alexander Schleicher ASK 21 Technical Note No. 13 a, dated June 4, 1984, should be directed to Alexander Schleicher, Segelflugzeugbau, 6416 Poppenhausen, Wasserkuppe, Federal Republic of Germany; telephone: 49.6658.890 or 49.6658.8920; facsimile: 49.6658.8923 or 49.6658.8940. This service information may be examined at the FAA, Central Region, Office of the Regional Counsel, Room 1558, 601 E. 12th Street, Kansas City, Missouri 64106.

(f) The replacement required by this AD shall be done in accordance with Alexander Schleicher ASK 21 Technical Note No. 13 a, dated June 4, 1984. This incorporation by reference was approved by the Director of the Federal Register in accordance with 5 U.S.C. 552(a) and 1 CFR part 51. Copies may be obtained from Alexander Schleicher, Segelflugzeugbau, 6416 Poppenhausen, Wasserkuppe, Federal Republic of Germany. Copies may be inspected at the FAA, Central Region, Office of the Regional Counsel, Room 1558, 601 E. 12th Street, Kansas City, Missouri, or at the Office of the Federal Register, 800 North Capitol Street, NW, suite 700, Washington, DC.

Note 3: The subject of this AD is addressed in German AD No. 84–32/2 Schleicher, dated June 12, 1984.

(g) This amendment becomes effective on June 26, 998. Issued in Kansas City, Missouri, on April 30, 1998.

Michael Gallagher,

Manager, Small Airplane Directorate, Aircraft Certification Service.

[FR Doc. 98–12380 Filed 5–12–98; 8:45 am]

BILLING CODE 4910–13–U

DEPARTMENT OF TRANSPORTATION

Federal Aviation Administration

14 CFR Part 39

[Docket No. 97–NM–297–AD; Amendment 39–10519; AD 98–10–08]

RIN 2120–AA64

Airworthiness Directives; Construcciones Aeronauticas, S.A. (CASA) Model C–212 Series Airplanes

AGENCY: Federal Aviation Administration, DOT.

ACTION: Final rule.

SUMMARY: This amendment adopts a new airworthiness directive (AD), applicable to certain CASA Model C–212 series airplanes, that requires a one-time inspection of the lower shaft and support structure of the rudder for corrosion, repair of any discrepancy found, and modification of the structure. This amendment is prompted by issuance of mandatory continuing airworthiness information by a foreign civil airworthiness authority. The actions specified by this AD are intended to prevent corrosion from developing in the lower shaft and support structure of the rudder, which could result in the failure of the rudder lower shaft and consequent reduced controllability of the airplane.

DATES: Effective June 17, 1998.

The incorporation by reference of certain publications listed in the regulations is approved by the Director of the Federal Register as of June 17, 1998.

ADDRESSES: The service information referenced in this AD may be obtained from Construcciones Aeronauticas, S.A., Getafe, Madrid, Spain. This information may be examined at the Federal Aviation Administration (FAA), Transport Airplane Directorate, Rules Docket, 1601 Lind Avenue, SW., Renton, Washington; or at the Office of the Federal Register, 800 North Capitol Street, NW., suite 700, Washington, DC.

FOR FURTHER INFORMATION CONTACT: Norman B. Martenson, Manager, International Branch, ANM–116, FAA, Transport Airplane Directorate, 1601 Lind Avenue, SW., Renton, Washington 98055–4056; telephone (425) 227–2110; fax (425) 227–1149.

SUPPLEMENTARY INFORMATION: A proposal to amend part 39 of the Federal Aviation Regulations (14 CFR part 39) to include an airworthiness directive (AD) that is applicable to certain CASA Model C–212 series airplanes was published in the **Federal Register** on March 10, 1998 (63 FR 11631). That action proposed to require a one-time inspection of the lower shaft and support structure of the rudder for corrosion, repair of any discrepancy found, and modification of the structure.

Comments

Interested persons have been afforded an opportunity to participate in the making of this amendment. No comments were submitted in response to the proposal or the FAA's determination of the cost to the public.

Conclusion

The FAA has determined that air safety and the public interest require the adoption of the rule as proposed.

Cost Impact

The FAA estimates that 38 airplanes of U.S. registry will be affected by this AD, that it will take approximately 7 work hours per airplane to accomplish the required actions, and that the average labor rate is $60 per work hour. Required parts will cost approximately $400 per airplane. Based on these figures, the cost impact of the AD on U.S. operators is estimated to be $31,160, or $820 per airplane.

The cost impact figure discussed above is based on assumptions that no operator has yet accomplished any of the requirements of this AD action, and that no operator would accomplish those actions in the future if this AD were not adopted.

Regulatory Impact

The regulations adopted herein will not have substantial direct effects on the States, on the relationship between the national government and the States, or on the distribution of power and responsibilities among the various levels of government. Therefore, in accordance with Executive Order 12612, it is determined that this final rule does not have sufficient federalism implications to warrant the preparation of a Federalism Assessment.

For the reasons discussed above, I certify that this action (1) is not a ''significant regulatory action'' under

Executive Order 12866; (2) is not a ''significant rule'' under DOT Regulatory Policies and Procedures (44 FR 11034, February 26, 1979); and (3) will not have a significant economic impact, positive or negative, on a substantial number of small entities under the criteria of the Regulatory Flexibility Act. A final evaluation has been prepared for this action and it is contained in the Rules Docket. A copy of it may be obtained from the Rules Docket at the location provided under the caption **ADDRESSES**.

List of Subjects in 14 CFR Part 39

Air transportation, Aircraft, Aviation safety, Incorporation by reference, Safety.

Adoption of the Amendment

Accordingly, pursuant to the authority delegated to me by the Administrator, the Federal Aviation Administration amends part 39 of the Federal Aviation Regulations (14 CFR part 39) as follows:

PART 39—AIRWORTHINESS DIRECTIVES

1. The authority citation for part 39 continues to read as follows:

Authority: 49 U.S.C. 106(g), 40113, 44701.

§ 39.13 [Amended]

2. Section 39.13 is amended by adding the following new airworthiness directive:

98–10–08 Construcciones Aeronauticas, S.A. (CASA): Amendment 39–10519. Docket 97–NM–297–AD.

Applicability: Model C–212 series airplanes, as listed in CASA Service Bulletin SB–212–27–34, dated November 22, 1993, certificated in any category.

Note 1: This AD applies to each airplane identified in the preceding applicability provision, regardless of whether it has been modified, altered, or repaired in the area subject to the requirements of this AD. For airplanes that have been modified, altered, or repaired so that the performance of the requirements of this AD is affected, the owner/operator must request approval for an alternative method of compliance in accordance with paragraph (b) of this AD. The request should include an assessment of the effect of the modification, alteration, or repair on the unsafe condition addressed by this AD; and, if the unsafe condition has not been eliminated, the request should include specific proposed actions to address it.

Compliance: Required as indicated, unless accomplished previously.

To prevent corrosion from developing in the lower shaft and support structure of the rudder, which could result in the failure of the rudder lower shaft and consequent reduced controllability of the airplane, accomplish the following:

(a) Within 7 months after the effective date of this AD, accomplish paragraphs (a)(1) and (a)(2) of this AD, in accordance with CASA Service Bulletin SB–212–27–34, dated November 22, 1993.

(1) Inspect the rudder lower shaft and support structure for corrosion; and, prior to further flight, repair any discrepancy found. And

(2) Modify the rudder lower shaft and support structure to prevent the entry and accumulation of water.

(b) An alternative method of compliance or adjustment of the compliance time that provides an acceptable level of safety may be used if approved by the Manager, International Branch, ANM–116, FAA, Transport Airplane Directorate. Operators shall submit their requests through an appropriate FAA Principal Maintenance Inspector, who may add comments and then send it to the Manager, International Branch, ANM–116.

Note 2: Information concerning the existence of approved alternative methods of compliance with this AD, if any, may be obtained from the International Branch, ANM–116.

(c) Special flight permits may be issued in accordance with sections 21.197 and 21.199 of the Federal Aviation Regulations (14 CFR 21.197 and 21.199) to operate the airplane to a location where the requirements of this AD can be accomplished.

(d) The actions shall be done in accordance with CASA Service Bulletin SB–212–27–34, dated November 22, 1993. This incorporation by reference was approved by the Director of the Federal Register in accordance with 5 U.S.C. 552(a) and 1 CFR part 51. Copies may be obtained from Construcciones Aeronauticas, S.A., Getafe, Madrid, Spain. Copies may be inspected at the FAA, Transport Airplane Directorate, 1601 Lind Avenue, SW., Renton, Washington; or at the Office of the Federal Register, 800 North Capitol Street, NW., suite 700, Washington, DC.

Note 3: The subject of this AD is addressed in Spanish airworthiness directive 06/96, dated May 21, 1996.

(e) This amendment becomes effective on June 17, 1998.

Issued in Renton, Washington, on May 5, 1998.

D. L. Riggin,

Acting Manager, Transport Airplane Directorate, Aircraft Certification Service.

[FR Doc. 98–12519 Filed 5–12–98; 8:45 am]

BILLING CODE 4910–13–U

DEPARTMENT OF TRANSPORTATION

Federal Aviation Administration

14 CFR Part 39

[Docket No. 98–CE–24–AD; Amendment 39–10517; AD 98–10–06]

RIN 2120–AA64

Airworthiness Directives; Burkhart Grob Luft-und Raumfahrt Models G115C, G115C2, G115D, and G115D2 Airplanes

AGENCY: Federal Aviation Administration, DOT.

ACTION: Final rule.

SUMMARY: This amendment supersedes Airworthiness Directive (AD) 96–19–07, which currently requires the following on Burkhart Grob Luft-und Raumfahrt (Grob) Models G115C, G115C2, G115D, and G115D2 airplanes: installing a placard that restricts the never exceed speed (Vne) of the affected airplane models from 184 knots to 160 knots; installing on the airspeed indicator glass a red line at 296 km/h (160 knots); installing a placard that prohibits aerobatic maneuvers; and placing a copy of the AD in the Limitations Section of the airplane flight manual. This AD will temporarily retain the flight restrictions that are currently required by AD 96–19–07; and will eventually require accomplishing certain inspections and modifications, as terminating action for these flight restrictions. This AD is the result of mandatory continuing airworthiness information (MCAI) issued by the airworthiness authority for Germany. The actions specified by this AD are intended to prevent loss of control of the airplane caused by excessive speed or aerobatic maneuvers.

DATES: Effective June 28, 1998.

The incorporation by reference of certain publications listed in the regulations is approved by the Director of the Federal Register as of June 28, 1998.

ADDRESSES: Service information that applies to this AD may be obtained from Burkhart Grob Luft-und Raumfahrt, D–8939 Mattsies, Germany. This information may also be examined at the Federal Aviation Administration (FAA), Central Region, Office of the Regional Counsel, Attention: Rules Docket No. 98–CE–24–AD, Room 1558, 601 E. 12th Street, Kansas City, Missouri 64106; or at the Office of the Federal Register, 800 North Capitol Street, NW, suite 700, Washington, DC.

FOR FURTHER INFORMATION CONTACT: Mr. Karl M. Schletzbaum, Aerospace Engineer, FAA, Small Airplane

Directorate, 1201 Walnut, suite 900, Kansas City, Missouri 64106; telephone: (816) 426–6934; facsimile: (816) 426–2169.

SUPPLEMENTARY INFORMATION:

Events Leading to the Issuance of This AD

A proposal to amend part 39 of the Federal Aviation Regulations (14 CFR part 39) to include an AD that would apply to Grob Models G115C, G115C2, G115D, and G115D2 airplanes was published in the **Federal Register** as a notice of proposed rulemaking (NPRM), on March 6, 1998 (63 FR 11171). The NPRM proposed to supersede AD 96–19–07, Amendment 39–9765 (61 FR 49250, September 19, 1996), which currently requires installing a placard that restricts the never exceed speed (Vne) of the affected airplane models from 184 knots to 160 knots; installing on the airspeed indicator glass a red line at 296 km/h (160 knots); installing a placard that prohibits aerobatic maneuvers; and placing a copy of the AD in the Limitations Section of the airplane flight manual. The NPRM proposed to temporarily retain the flight restrictions that are currently required by AD 96–19–07, and eventually require the inspections and modifications specified in the service information previously referenced, as terminating action for the flight restrictions. Accomplishment of the proposed actions as specified in the NPRM would be in accordance with the following service documents: Grob Service Bulletin No. 1078–59/3, dated October 24, 1996; Grob Installation Instructions 1078–64, dated December 11, 1996, as referenced in both Grob Service Bulletin No. 1078–64/2, dated April 8, 1997; and Grob Service Bulletin No. 1078–64, dated December 11, 1996; and Grob Service Bulletin No. 1078–66, dated February 10, 1997.

The NPRM was the result of mandatory continuing airworthiness information (MCAI) issued by the airworthiness authority for Germany.

Interested persons have been afforded an opportunity to participate in the making of this amendment. No comments were received on the proposed rule or the FAA's determination of the cost to the public.

The FAA's Determination

After careful review of all available information related to the subject presented above, the FAA has determined that air safety and the public interest require the adoption of the rule as proposed except for minor editorial corrections. The FAA has determined that these minor corrections will not change the meaning of the AD and will not add any additional burden upon the public than was already proposed.

Cost Impact

The FAA estimates that 23 airplanes in the U.S. registry will be affected by this AD, that it will take approximately 40 workhours (modification: 36 workhours; inspection: 4 workhours) per airplane to accomplish this action, and that the average labor rate is approximately $60 an hour. Grob will provide parts free of charge as part of its warranty program. Based on these figures, the total cost impact of this AD on U.S. operators is estimated to be $55,200, or $2,400 per airplane.

Regulatory Impact

The regulations adopted herein will not have substantial direct effects on the States, on the relationship between the national government and the States, or on the distribution of power and responsibilities among the various levels of government. Therefore, in accordance with Executive Order 12612, it is determined that this final rule does not have sufficient federalism implications to warrant the preparation of a Federalism Assessment.

For the reasons discussed above, I certify that this action (1) is not a ''significant regulatory action'' under Executive Order 12866; (2) is not a ''significant rule'' under DOT Regulatory Policies and Procedures (44 FR 11034, February 26, 1979); and (3) will not have a significant economic impact, positive or negative, on a substantial number of small entities under the criteria of the Regulatory Flexibility Act. A copy of the final evaluation prepared for this action is contained in the Rules Docket. A copy of it may be obtained by contacting the Rules Docket at the location provided under the caption **ADDRESSES**.

List of Subjects in 14 CFR Part 39

Air transportation, Aircraft, Aviation safety, Incorporation by reference, Safety.

Adoption of the Amendment

Accordingly, pursuant to the authority delegated to me by the Administrator, the Federal Aviation Administration amends part 39 of the Federal Aviation Regulations (14 CFR part 39) as follows:

PART 39—AIRWORTHINESS DIRECTIVES

1. The authority citation for part 39 continues to read as follows:

Authority: 49 U.S.C. 106(g), 40113, 44701.

§ 39.13 [Amended]

2. Section 39.13 is amended by removing Airworthiness Directive (AD) 96–19–07, Amendment 39–9765, and by adding a new AD to read as follows:

98–10–06 Burkhart Grob Luft-und Raumfahrt: Amendment 39–10517; Docket No. 98–CE–24–AD; Supersedes AD 96–19–07, Amendment 39–9765.

Applicability: Models G115C, G115C2, G115D, and G115D2 airplanes, all serial numbers, certificated in any category.

Note 1: This AD applies to each airplane identified in the preceding applicability provision, regardless of whether it has been modified, altered, or repaired in the area subject to the requirements of this AD. For airplanes that have been modified, altered, or repaired so that the performance of the requirements of this AD is affected, the owner/operator must request approval for an alternative method of compliance in accordance with paragraph (e) of this AD. The request should include an assessment of the effect of the modification, alteration, or repair on the unsafe condition addressed by this AD; and, if the unsafe condition has not been eliminated, the request should include specific proposed actions to address it.

Compliance: Required as indicated in the body of this AD, unless already accomplished.

To prevent loss of control of the airplane caused by excessive speed or aerobatic maneuvers, accomplish the following:

(a) For all serial numbered airplanes, prior to further flight after September 26, 1996 (the effective date of AD 96–19–07), accomplish the following:

(1) Install, on the limitation placard at the left-hand cabin wall, the airspeed placard that is included with Grob Service Bulletin No. 1078–59/2, dated September 2, 1996. This placard reduces the maximum airspeed to 296 kilometers per hour (km/h); equal to 160 knots per hour.

(2) Modify the airspeed indicator glass by accomplishing the following:

(i) Place a red radial line on the indicator glass at 296 km/h (160 knots). The minimum dimensions for this radial line are 0.05-inch in width and 0.30-inch in length.

(ii) Place a white 0.05-inch minimum width slippage index mark that connects both the instrument glass and bezel. This slippage index mark shall not obscure any airspeed markings.

(3) Install, near the airspeed indicator, the red placard included with Grob Service Bulletin No. 1078–59/2 that has the words: ''Aerobatic maneuvers are prohibited.''

(4) Insert a copy of this AD into the Limitations Section of the airplane flight manual.

Note 2: The actions of paragraph (a), including all subparagraphs, are the same as that required by AD 96–19–07, which is superseded by this action. These requirements are being temporarily retained in this AD to provide a grace period for accomplishing the other actions required by this AD.

(b) Within the next 200 hours time-in-service (TIS) after the effective date of this AD, accomplish the following:

(1) For all serial numbered airplanes, inspect the nose wheel steering, the sliding canopy and canopy locking mechanism, the attachment of the horizontal stabilizer, the elevator installation, the vertical stabilizer, the rudder installation, and the weights and residual moments of the control surfaces in accordance with the instructions in Grob Service Bulletin No. 1078–59/3, dated October 24, 1996. Prior to further flight, repair any discrepancies in accordance with the above-referenced service bulletin.

(2) For airplanes incorporating a serial number in the range of 82001 through 82077, replace the elevator hinges with parts of improved design in accordance with Grob Installation Instructions 1078–64, dated December 11, 1996, as specified in both Grob Service Bulletin No. 1078–64/2, dated April 8, 1997; and Grob Service Bulletin No. 1078–64, dated December 11, 1996.

(3) For airplanes incorporating a serial number in the range of 82001 through 82077, after accomplishing the replacement required by paragraph (b)(2) of this AD, adjust the mass and residual moments in accordance with Grob Service Bulletin No. 1078–66, dated February 10, 1997.

(c) Accomplishing the actions required by paragraphs (b)(1), (b)(2), and (b)(3) of this AD eliminates the placard and flight restriction requirements of paragraph (a), including all subparagraphs, of this AD.

(d) Special flight permits may be issued in accordance with sections 21.197 and 21.199 of the Federal Aviation Regulations (14 CFR 21.197 and 21.199) to operate the airplane to a location where the requirements of this AD can be accomplished.

(e) An alternative method of compliance or adjustment of the compliance times that provides an equivalent level of safety may be approved by the Manager, Small Airplane Directorate, 1201 Walnut, suite 900, Kansas City, Missouri 64106.

(1) The request shall be forwarded through an appropriate FAA Maintenance Inspector, who may add comments and then send it to the Manager, Small Airplane Directorate.

(2) Alternative methods of compliance approved in accordance with AD 96–19–07 are not considered approved as alternative methods of compliance for this AD.

Note 3: Information concerning the existence of approved alternative methods of compliance with this AD, if any, may be obtained from the Small Airplane Directorate.

(f) Questions or technical information related to service information previously referenced should be directed to Burkhart Grob Luft-und Raumfahrt, D–8939 Mattsies, Germany. This service information may be examined at the FAA, Central Region, Office of the Regional Counsel, Room 1558, 601 E. 12th Street, Kansas City, Missouri 64106.

(g) The inspection required by this AD shall be done in accordance with Grob Service Bulletin No. 1078–59/3, dated October 24, 1996. The replacement required by this AD shall be done in accordance with Grob Installation Instructions 1078–64, dated December 11, 1996, as specified in both Grob Service Bulletin No. 1078–64/2, dated April 8, 1997; and Grob Service Bulletin No. 1078–64, dated December 11, 1996. The adjustment required by this AD shall be done in accordance with Grob Service Bulletin No. 1078–66, dated February 10, 1997. This incorporation by reference was approved by the Director of the Federal Register in accordance with 5 U.S.C. 552(a) and 1 CFR part 51. Copies may be obtained from Burkhart Grob Luft-und Raumfahrt, D–8939 Mattsies, Germany. Copies may be inspected at the FAA, Central Region, Office of the Regional Counsel, Room 1558, 601 E. 12th Street, Kansas City, Missouri, or at the Office of the Federal Register, 800 North Capitol Street, NW, suite 700, Washington, DC.

Note 4: The subject of this AD is addressed in German AD 96–270/2, dated December 5, 1996; German AD 96–270/3, dated December 4, 1997; and German AD 97–143, dated May 22, 1997.

(h) This amendment supersedes AD 96–19–07, Amendment 39–9765.

(i) This amendment becomes effective on June 28, 1998.

Issued in Kansas City, Missouri, on May 1, 1998.

Michael Gallagher,

Manager, Small Airplane Directorate, Aircraft Certification Service.

[FR Doc. 98–12355 Filed 5–12–98; 8:45 am]

BILLING CODE 4910–13–U

DEPARTMENT OF TRANSPORTATION

Federal Aviation Administration

14 CFR Part 39

[Docket No. 97–SW–32–AD; Amendment 39–10520; AD 97–18–11]

RIN 2120–AA64

Airworthiness Directives; Bell Helicopter Textron (Bell) Model 204B, 205A, and 205A–1 Helicopters

AGENCY: Federal Aviation Administration, DOT.

ACTION: Final rule; request for comments.

SUMMARY: This document publishes in the **Federal Register** an amendment adopting Airworthiness Directive (AD) 97–18–11, issued on August 29, 1997, which was sent previously to all known U.S. owners and operators of Bell Model 204B, 205A, and 205A–1 helicopters by individual letters. This AD requires modification and inspections of the vertical fin spar. If any crack is discovered, replacement of the vertical fin spar with an airworthy vertical fin spar is required before further flight. This amendment is prompted by several failures of the vertical fin spar, including those with steel doublers, caused by fatigue cracks that result from a large number of high-power events. The actions specified by this AD are intended to prevent in-flight failure of the vertical fin spar and subsequent loss of control of the helicopter.

DATES: Effective May 28, 1998, to all persons except those persons to whom it was made immediately effective by priority letter AD 97–18–11, issued on August 29, 1997, which contained the requirements of this amendment.

Comments for inclusion in the Rules Docket must be received on or before July 13, 1998.

ADDRESSES: Submit comments in triplicate to the Federal Aviation Administration (FAA), Office of the Regional Counsel, Southwest Region, Attention: Rules Docket No. 97–SW–32–AD, 2601 Meacham Blvd., Room 663, Fort Worth, Texas 76137.

FOR FURTHER INFORMATION CONTACT: Mr. Charles Harrison, Aerospace Engineer, FAA, Rotorcraft Directorate, Rotorcraft Certification Office, 2601 Meacham Blvd., Fort Worth, Texas 76137, telephone (817) 222–5447, fax (817) 222–5783.

SUPPLEMENTARY INFORMATION: On August 29, 1997, the FAA issued priority letter AD 97–18–11, applicable to Bell Model 204B, 205A, and 205A–1 helicopters, which requires modification and inspections of the vertical fin spar. If any crack is discovered, replacement of the vertical fin spar with an airworthy vertical fin spar is required before further flight. Priority letter AD 97–18–11 superseded priority letter AD 97–18–01, issued on August 19, 1997. AD 97–18–01 contained the same basic requirements as is contained in AD 97–18–11. However, AD 97–18–11 was needed to clarify the method of compliance for the Model 204B helicopters, and to correct an error in a vertical fin spar part number (P/N). AD 97–18–01 incorrectly stated the P/N as P/N 205–030–851 instead of P/N 205–032–851. This AD is prompted by an accident involving the in-flight failure of the vertical fin spar on a Model 205A–1 helicopter. Two other accidents on restricted category (military surplus) aircraft of similar type design have occurred. One of the accidents resulted in a fatality. In 1971, the FAA issued AD 71–21–02, which addressed this problem by requiring the addition of a steel doubler to the inside edge of the vertical fin spar. There have been several additional failures since that AD was issued. A large number of high-power events can cause fatigue cracks which will cause the vertical fin spar to fail. This condition, if not corrected, could result in in-flight failure of the vertical fin spar and subsequent loss of control of the helicopter.

Since the unsafe condition described is likely to exist or develop on other Bell

Model 204B, 205A, and 205A–1 helicopters of the same type design, the FAA issued priority letter AD 97–18–11 to prevent in-flight failure of the vertical fin spar and subsequent loss of control of the helicopter. The AD requires, within 8 hours time-in-service (TIS) after the effective date of this AD, modification and inspection of the vertical fin spar. Then, at intervals not to exceed 8 hours TIS, further inspections of the vertical fin spar for cracks are required. If any crack is discovered, replacement of the vertical fin spar with an airworthy vertical fin spar is required before further flight.

Since it was found that immediate corrective action was required, notice and opportunity for prior public comment thereon were impracticable and contrary to the public interest, and good cause existed to make the AD effective immediately by individual letters issued on August 29, 1997 to all known U.S. owners and operators of Bell Model 204B, 205A, and 205A–1 helicopters. These conditions still exist, and the AD is hereby published in the **Federal Register** as an amendment to section 39.13 of the Federal Aviation Regulations (14 CFR 39.13) to make it effective to all persons.

The FAA estimates that 265 helicopters will be affected by this proposed AD, that it will take approximately 203 work hours to accomplish the modification, inspection, and spar replacement, and that the average labor rate is $60 per work hour. Based on these figures, the total cost impact of the AD on U.S. operators is estimated to be $3,227,700.

Comments Invited

Although this action is in the form of a final rule that involves requirements affecting flight safety and, thus, was not preceded by notice and an opportunity for public comment, comments are invited on this rule. Interested persons are invited to comment on this rule by submitting such written data, views, or arguments as they may desire. Communications should identify the Rules Docket number and be submitted in triplicate to the address specified under the caption **ADDRESSES**. All communications received on or before the closing date for comments will be considered, and this rule may be amended in light of the comments received. Factual information that supports the commenter's ideas and suggestions is extremely helpful in evaluating the effectiveness of the AD action and determining whether additional rulemaking action would be needed.

Comments are specifically invited on the overall regulatory, economic, environmental, and energy aspects of the rule that might suggest a need to modify the rule. All comments submitted will be available, both before and after the closing date for comments, in the Rules Docket for examination by interested persons. A report that summarizes each FAA-public contact concerned with the substance of this AD will be filed in the Rules Docket.

Commenters wishing the FAA to acknowledge receipt of their comments submitted in response to this rule must submit a self-addressed, stamped postcard on which the following statement is made: ''Comments to Docket No. 97–SW–32–AD.'' The postcard will be date stamped and returned to the commenter.

The regulations adopted herein will not have substantial direct effects on the States, on the relationship between the national government and the States, or on the distribution of power and responsibilities among the various levels of government. Therefore, in accordance with Executive Order 12612, it is determined that this final rule does not have sufficient federalism implications to warrant the preparation of a Federalism Assessment.

The FAA has determined that this regulation is an emergency regulation that must be issued immediately to correct an unsafe condition in aircraft, and that it is not a ''significant regulatory action'' under Executive Order 12866. It has been determined further that this action involves an emergency regulation under DOT Regulatory Policies and Procedures (44 FR 11034, February 26, 1979). If it is determined that this emergency regulation otherwise would be significant under DOT Regulatory Policies and Procedures, a final regulatory evaluation will be prepared and placed in the Rules Docket. A copy of it, if filed, may be obtained from the Rules Docket at the location provided under the caption **ADDRESSES.**

List of Subjects in 14 CFR Part 39

Air transportation, Aircraft, Aviation safety, Safety.

Adoption of the Amendment

Accordingly, pursuant to the authority delegated to me by the Administrator, the Federal Aviation Administration amends part 39 of the Federal Aviation Regulations (14 CFR part 39) as follows:

PART 39—AIRWORTHINESS DIRECTIVES

1. The authority citation for part 39 continues to read as follows:

Authority: 49 U.S.C. 106(g), 40113, 44701.

§ 39.13 [Amended]

2. Section 39.13 is amended by adding a new airworthiness directive (AD) to read as follows:

AD 97–18–11 Bell Helicopter Textron: Amendment 39–10520. Docket No. 97–SW–32–AD.

Applicability: Model 204B, 205A, and 205A–1 helicopters, with tailboom vertical fin spar, part number (P/N) 205–032-899, 205–030–846, or 205–032–851, all dash numbers, installed, certificated in any category.

Note 1: This AD applies to each helicopter identified in the preceding applicability provision, regardless of whether it has been modified, altered, or repaired in the area subject to the requirements of this AD. For helicopters that have been modified, altered, or repaired so that the performance of the requirements of this AD is affected, the owner/operator must use the authority provided in paragraph (c) to request approval from the FAA. This approval may address either no action, if the current configuration eliminates the unsafe condition, or different actions necessary to address the unsafe condition described in this AD. Such a request should include an assessment of the effect of the changed configuration on the unsafe condition addressed by this AD. In no case does the presence of any modification, alteration, or repair remove any helicopter from the applicability of this AD.

Compliance: Required as indicated, unless accomplished previously. To prevent in-flight failure of the tailboom vertical fin spar (vertical fin spar) and subsequent loss of control of the helicopter, accomplish the following:

(a) For Model 204B helicopters, within 8 hours time-in-service (TIS) after the effective date of this AD, modify the vertical fin spar as follows:

(1) Remove the 42° gearbox cover and open the drive shaft cover on the vertical fin spar assembly (see Figure 1).

(i) Remove the first four rivets from the vertical fin spar located at the bottom of the vertical fin spar left-hand side at the tailboom and vertical fin spar junction, and the first four rivets aft of the junction along the lower edge of the vertical fin spar skin (skin) as shown (see Figure 2). CAUTION: Extreme care must be taken when drilling and removing rivets from the side of vertical fin spar to ensure the vertical fin spar assembly is not damaged.

(ii) Trim the vertical fin spar left-hand skin using extreme care to not damage the vertical fin spar assembly (see Figure 3).

(iii) Deburr the rivet holes and trimmed skin edges. Remove all debris. In a ventilated work area, remove any surface contaminants with a cloth that has been dampened with aliphatic naphtha or an equivalent cleaning solvent.

(iv) Reattach the skin to the vertical fin spar using MS 20470AD rivets. DO NOT install the bottom two rivets into the vertical fin spar where the skin was trimmed.

(v) Reinstall the vertical fin spar skin lower edge rivets using M 7885/6–5 rivets (see Figure 6).

(vi) Refinish all reworked areas.

(vii) After modifying the vertical fin spar, immediately inspect the vertical fin spar in accordance with paragraphs (a)(2)(iii) and (a)(2)(iv) of this AD.

(2) After the initial modification and inspection of the vertical fin spar have been accomplished in accordance with paragraph (a)(1) of this AD, thereafter, at intervals not to exceed 8 hours TIS, inspect the vertical fin spar in accordance with paragraphs (a)(2)(iii) and (a)(2)(iv) of this AD for cracks as follows:

(i) Remove the lower aft tailboom inspection door, located at tailboom station 180 (see Figure 4).

(ii) Remove the 42° gearbox cover and open the drive shaft cover on the vertical fin (see Figure 1).

(iii) Through the lower aft tailboom inspection door, using a bright light and an inspection mirror, inspect the vertical fin spar assembly adjacent to the tailboom top skin on the forward side, paying special attention to the left-hand edge and the adjacent surfaces (see Figure 5).

(iv) In a ventilated work area, clean all surfaces to be inspected with a cloth dampened with aliphatic naphtha or an equivalent cleaning solvent. Using a bright light and a 10x magnifying glass, inspect the vertical fin spar assembly adjacent to the tailboom top-skin on the in-board and out-board sides, the vertical edge, and the two open rivet holes. Using a bright light and a mirror, inspect the aft side of the vertical fin spar in the same area. Special attention must be given to the left-hand edge of the vertical fin spar and any adjacent surfaces between fin stations 66.31 and 71.31 (see Figure 5).

(3) If any crack is discovered on the vertical fin spar as a result of the inspection specified in paragraphs (a)(2)(iii) or (a)(2)(iv) of this AD, replace the vertical fin spar assembly with an airworthy vertical fin spar assembly before further flight.

(b) For Model 205A and 205A–1 helicopters, within 8 hours TIS after the effective date of this AD, modify the vertical fin spar as follows:

(1) Remove the 42° gearbox cover and open the drive shaft cover on the vertical fin spar assembly (see Figure 1).

(i) Remove the clip, P/N 212–030–099–091, and the radius block, P/N 212–030–099–095, (see Figures 5 and 6).

(ii) Remove the first four rivets from the vertical fin spar, located at the bottom of the vertical fin spar left-hand side at the tailboom and vertical fin spar junction as shown (see Figure 5). CAUTION: Extreme care must be taken when drilling and removing rivets from the side of vertical fin spar to ensure the vertical fin spar assembly is not damaged.

(iii) Trim the vertical fin left-hand side skin and retainer, P/N 205–032–851–045, using extreme care to not damage the vertical fin spar assembly (see Figure 7).

(iv) Deburr the rivet holes and trimmed retainer and skin edges. Remove all debris. In a ventilated work area, remove any surface contaminants with a cloth that has been dampened with aliphatic naphtha or an equivalent cleaning solvent.

(v) Reattach the skin and retainer to the vertical fin spar using MS 20470AD rivets. DO NOT install the bottom two rivets into the vertical fin spar where the skin and retainer were trimmed.

(vi) Reinstall the clip and radius block with M 7885/6–5 rivets (see Figure 5).

(vii) Refinish all reworked areas.

(viii) After modifying the vertical fin spar, immediately inspect the vertical fin spar in accordance with paragraphs (b)(2)(iii) and (b)(2)(iv) of this AD.

(2) After the initial modification and inspection of the vertical fin spar have been accomplished in accordance with paragraph (b)(1) of this AD, thereafter, at intervals not to exceed 8 hours TIS, inspect the vertical fin spar in accordance with paragraphs (b)(2)(iii) and (b)(2)(iv) of this AD for cracks as follows:

(i) Remove the lower aft tailboom inspection door, located at tailboom station 180 (see Figure 4).

(ii) Remove the 42° gearbox cover and open the drive shaft cover on the vertical fin spar (see Figure 1).

(iii) Through the lower aft tailboom inspection door, using a bright light and an inspection mirror, inspect the vertical fin spar assembly adjacent to the tailboom top skin on the forward side, paying special attention to the left-hand edge and the adjacent surfaces (see Figure 5).

(iv) In a ventilated work area, clean all surfaces to be inspected with a cloth dampened with aliphatic naphtha or an equivalent cleaning solvent. Using a bright light and a 10x magnifying glass, inspect the vertical fin spar assembly adjacent to the tailboom top-skin on the in-board and out-board sides, the vertical edge and the two open rivet holes. Using a bright light and a mirror, inspect the aft side of the vertical fin spar in the same area. Special attention must be given to the left-hand edge of the vertical fin spar and any adjacent surfaces between fin stations 66.31 and 71.31 (see Figure 5).

(3) If any crack is discovered on the vertical fin spar as a result of the inspection specified in paragraphs (b)(2)(iii) or (b)(2)(iv) of this AD, replace the vertical fin spar assembly with an airworthy vertical fin spar assembly before further flight.

(c) An alternative method of compliance or adjustment of the compliance time that provides an acceptable level of safety may be used if approved by the Manager, Rotorcraft Certification Office, FAA. Operators shall submit their requests through an FAA Principal Maintenance Inspector, who may concur or comment and then send it to the Manager, Rotorcraft Certification Office.

Note 2: Information concerning the existence of approved alternative methods of compliance with this AD, if any, may be obtained from the Rotorcraft Certification Office.

(d) Special flight permits may be issued in accordance with §§ 21.197 and 21.199 of the Federal Aviation Regulations (14 CFR 21.197 and 21.199) to operate the helicopter to a location where the requirements of this AD can be accomplished.

BILLING CODE 4910–13–U

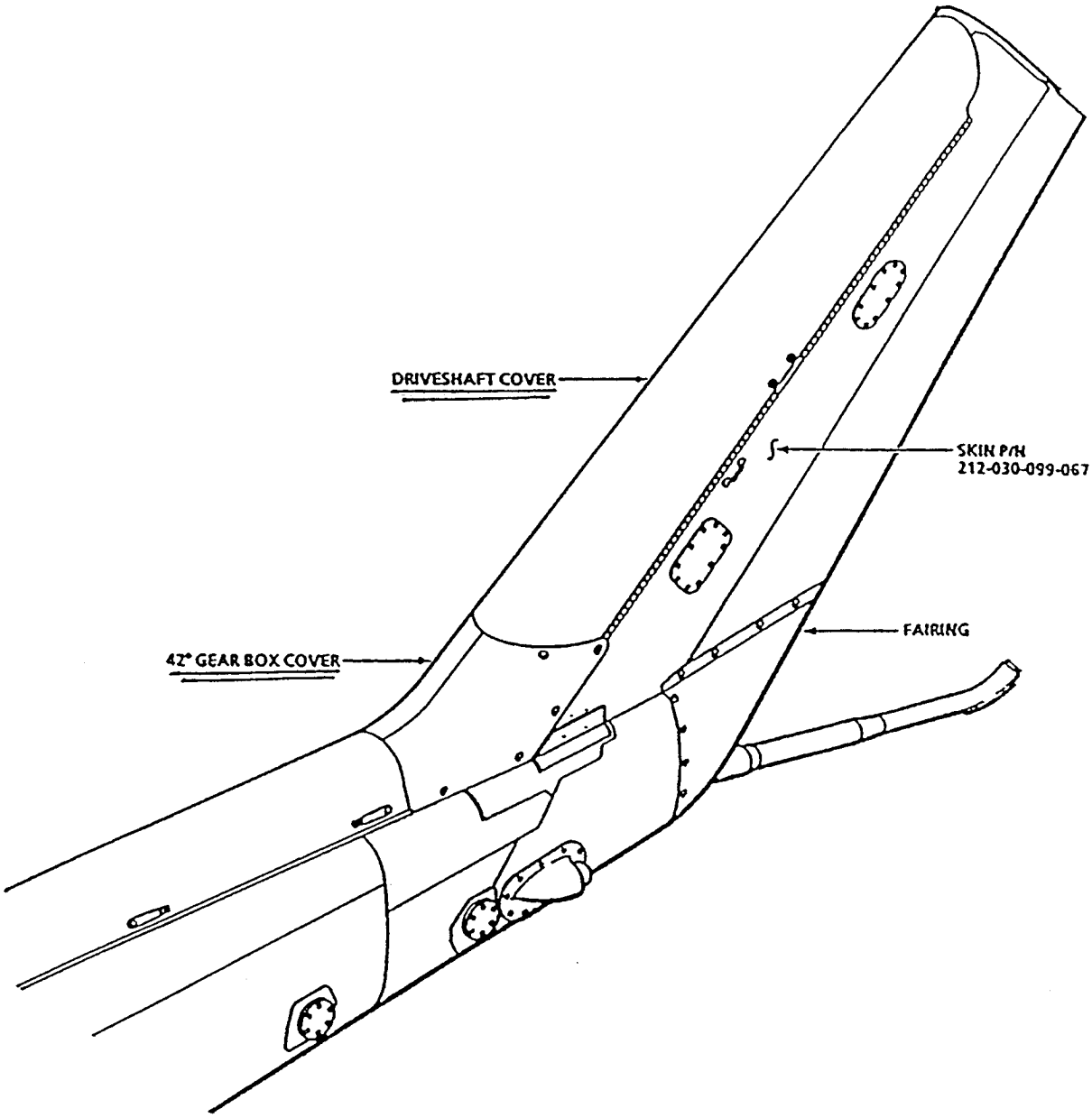
DRIVESHAFT COVER
SKIN P/N
212-030-099-067
FAIRING
42" GEAR BOX COVER

Fig. 1

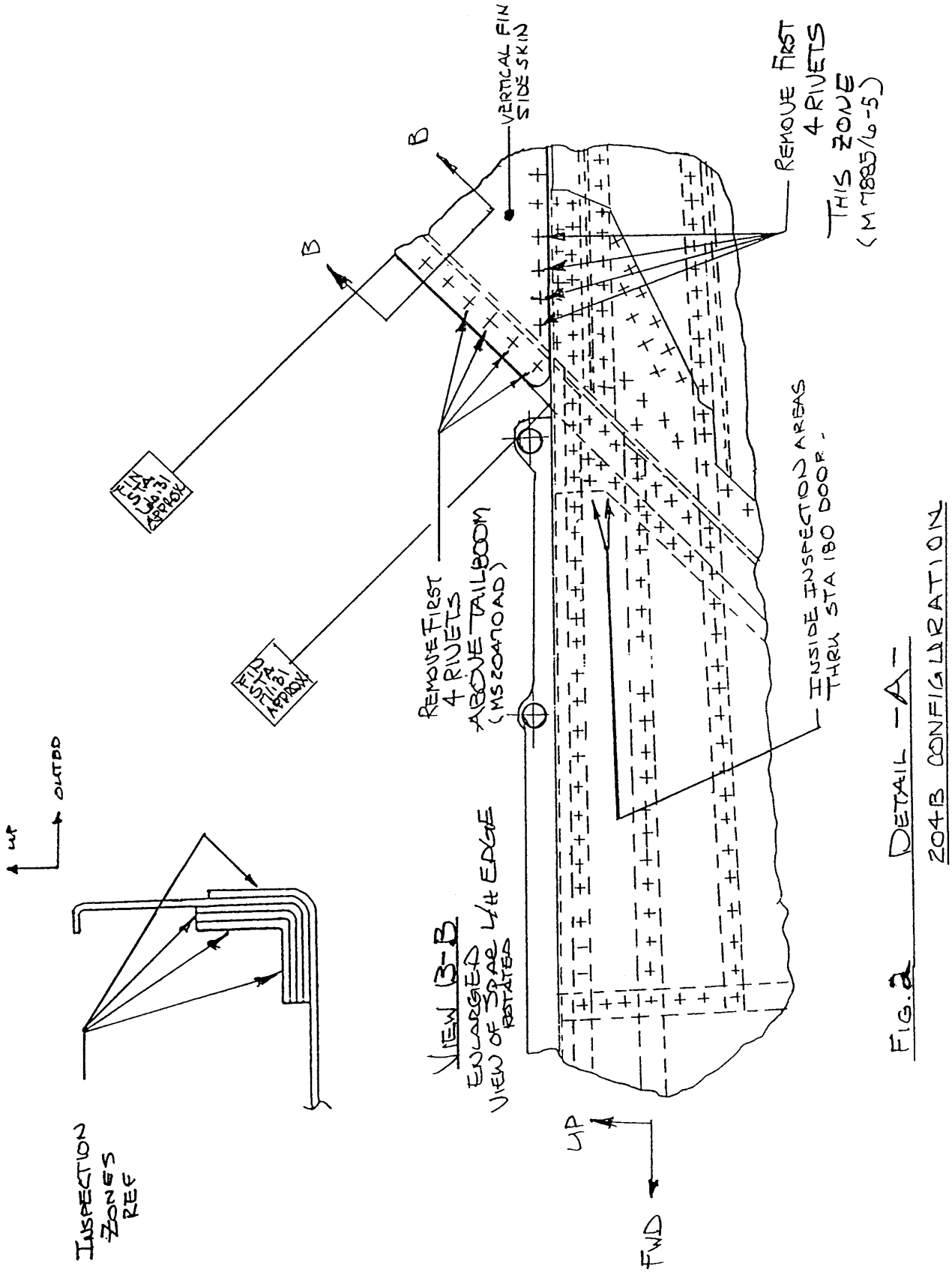

FIG. 2 DETAIL -A-
204B CONFIGURATION

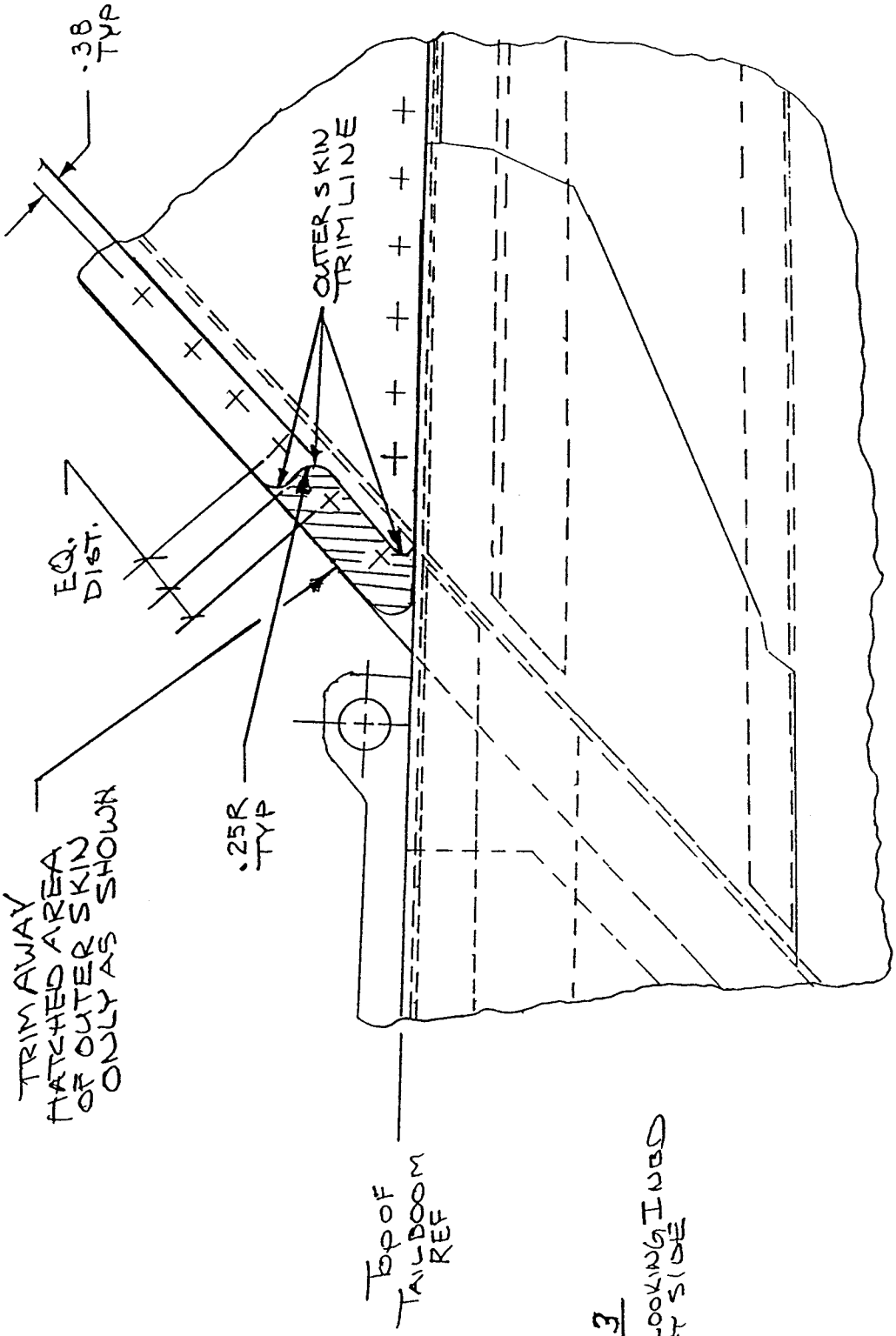

FIG. 3
VIEW LOOKING INBD LEFT SIDE

204B CONFIGURATION

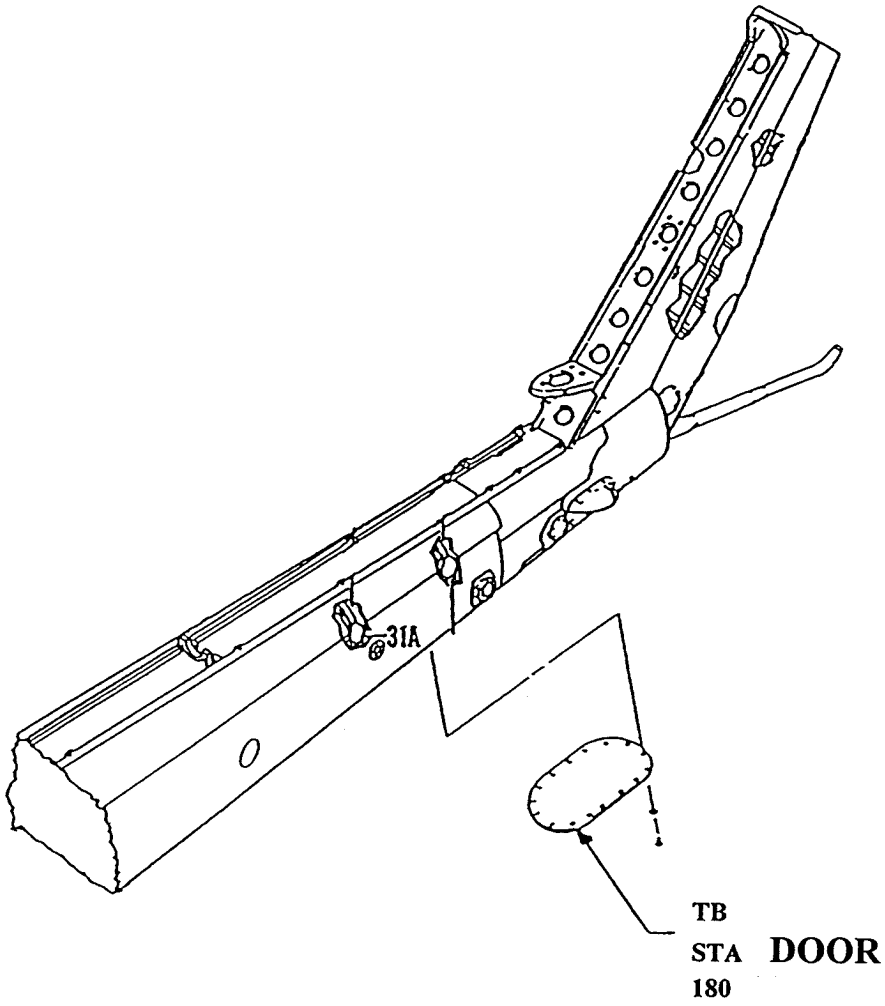

Fig. 4

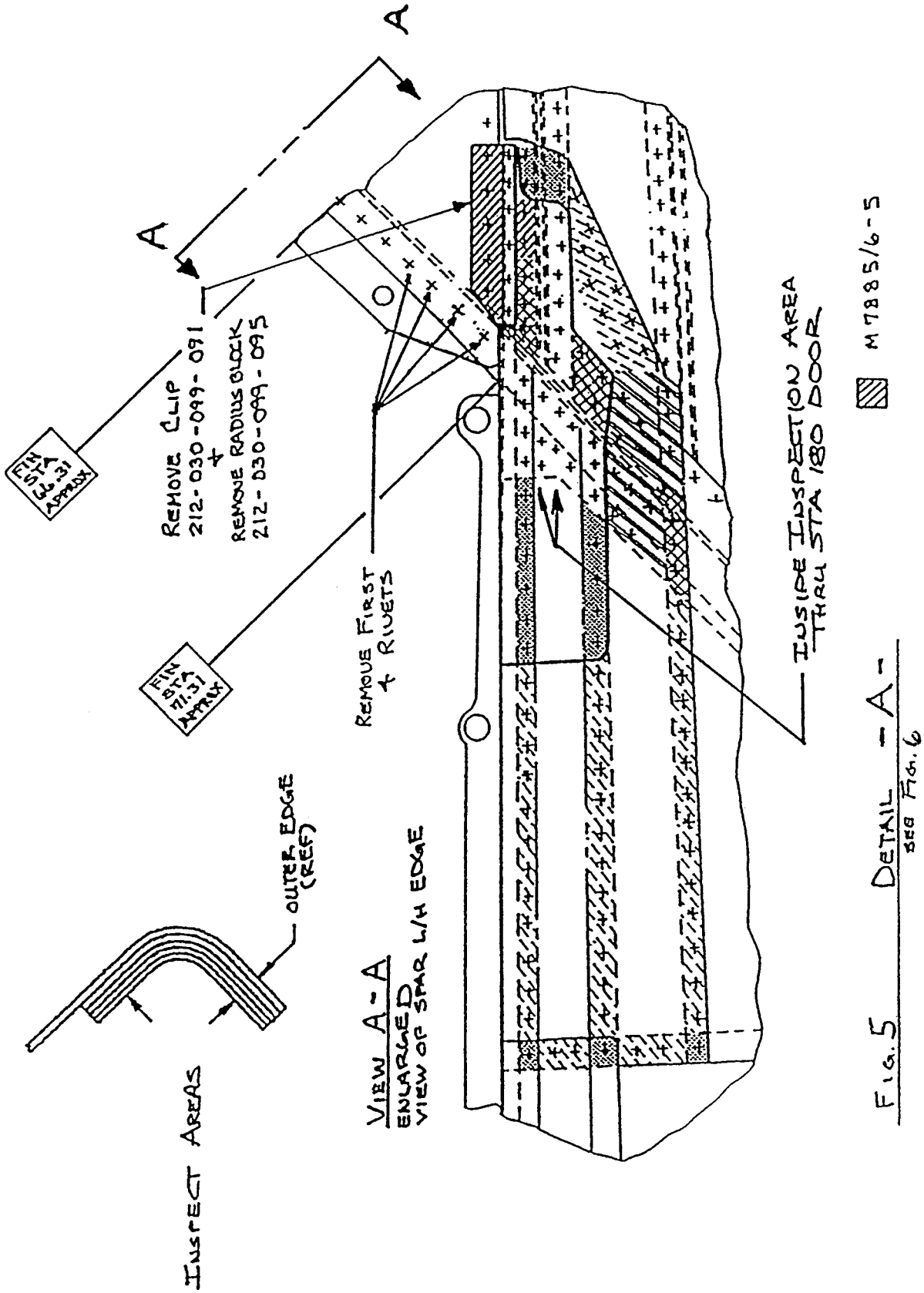
A
A
FIN STA 64.31 APPROX
REMOVE CLIP 212-030-099-091 + REMOVE RADIUS BLOCK 212-030-099-095
FIN STA 71.31 APPROX
REMOVE FIRST 4 RIVETS
INSPECT AREA THRU STA 180 DOOR
M7885/6-5
OUTER EDGE (REF)
INSPECT AREAS
VIEW A-A
ENLARGED VIEW OF SPAR L/H EDGE
DETAIL -A-
SEE FIG. 6

FIG. 5

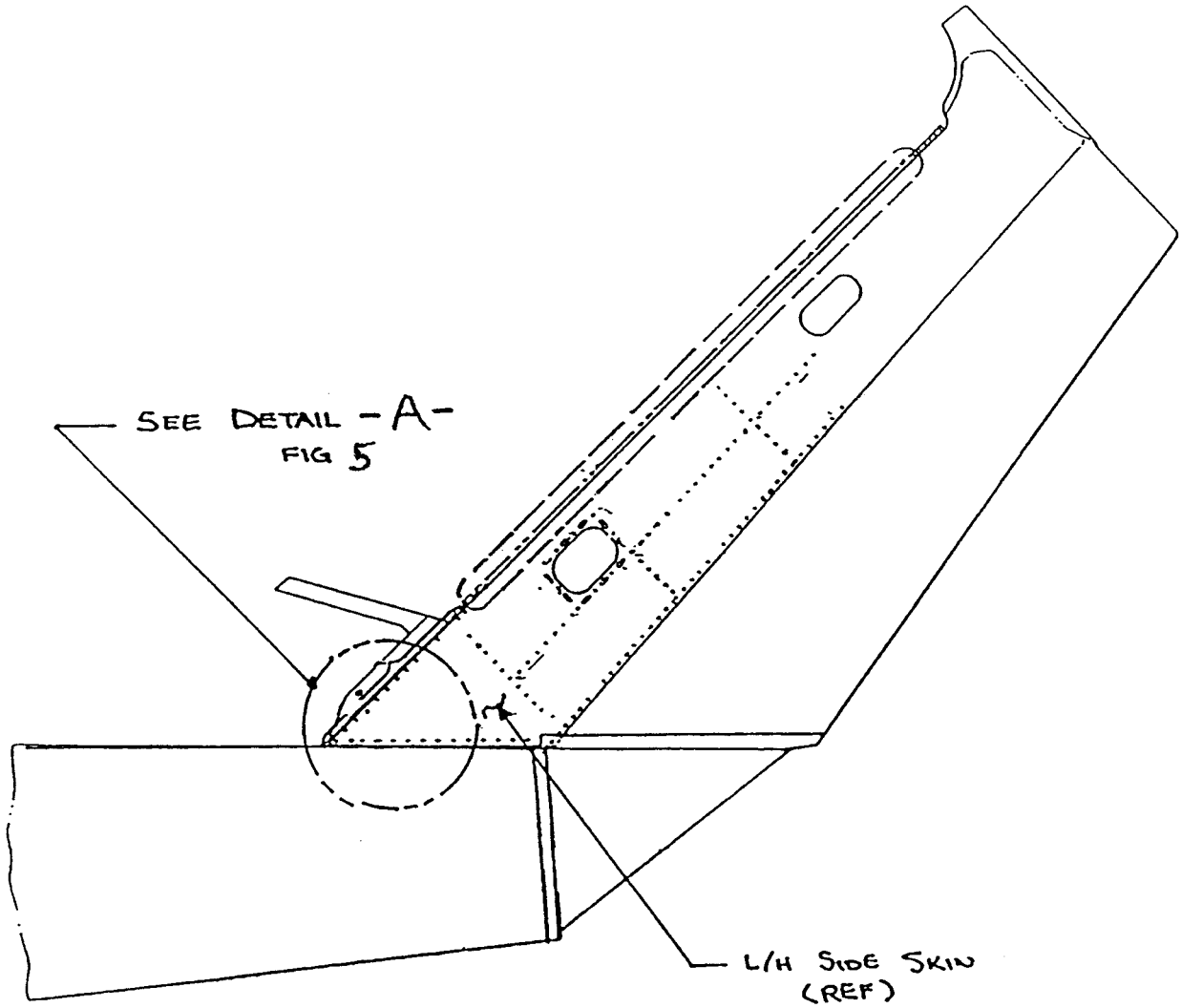

FIG 6 VIEW LOOKING INBD
L/H SIDE

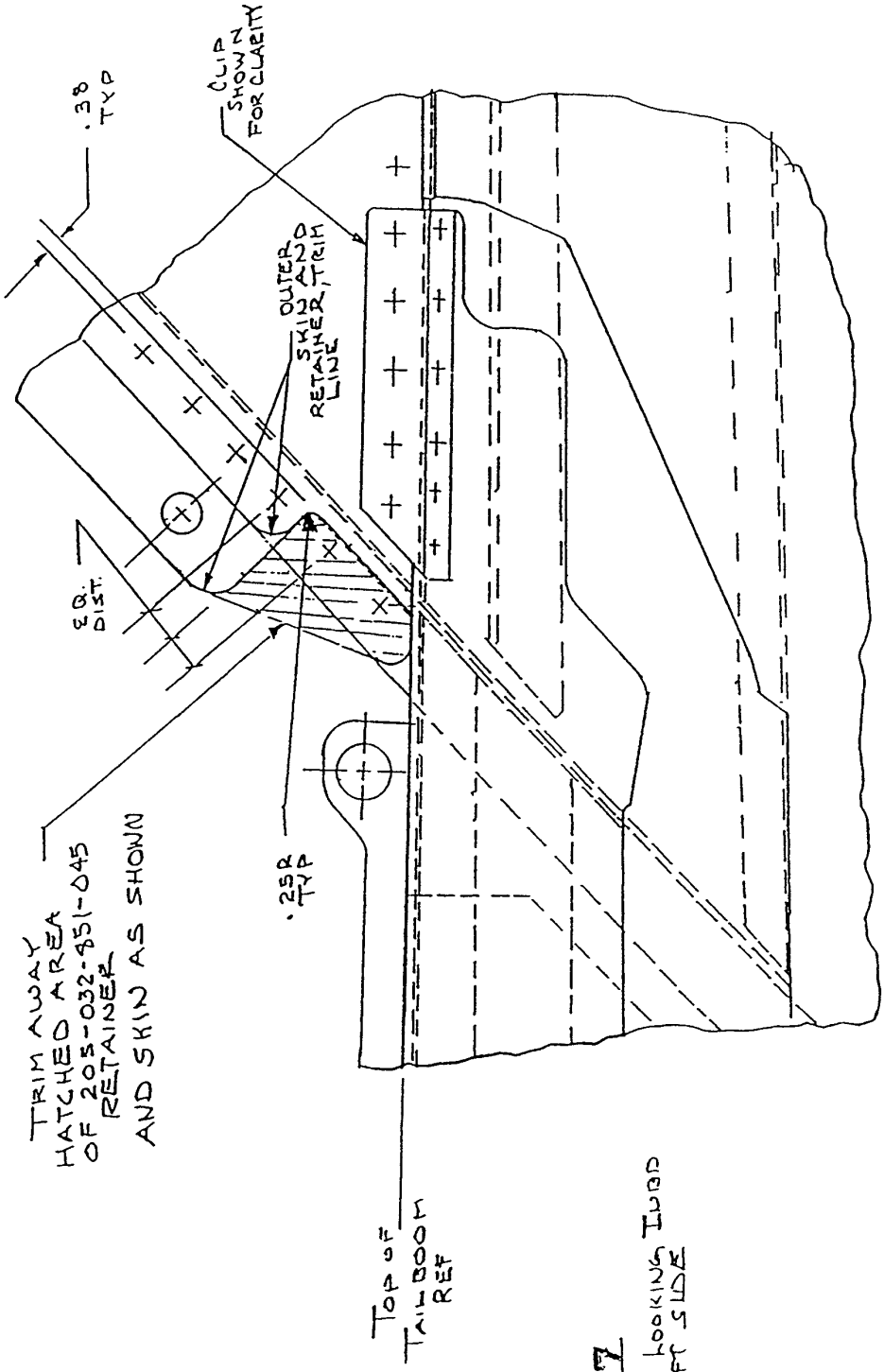

FIG. 7
VIEW LOOKING INBD LEFT SIDE

(e) This amendment becomes effective on May 28, 1998, to all persons except those persons to whom it was made immediately effective by Priority Letter AD 97–18–11, issued August 29, 1997, which contained the requirements of this amendment.

Issued in Fort Worth, Texas, on May 4, 1998.

Eric Bries.

Acting Manager, Rotorcraft Directorate, Aircraft Certification Service.

[FR Doc. 98–12508 Filed 5–12–98; 8:45 am]

BILLING CODE 4910–13–C

DEPARTMENT OF TRANSPORTATION

Federal Aviation Administration

14 CFR Part 39

[Docket No. 97–SW–35–AD; Amendment 39–10521; AD 97–20–09]

RIN 2120–AA64

Airworthiness Directives; Bell Helicopter Textron (Bell)-manufactured Model HH–1K, TH–1F, TH–1L, UH–1A, UH–1B, UH–1E, UH–1F, UH–1H, UH–1L, and UH–1P Helicopters; and Southwest Florida Aviation SW204, SW204HP, SW205, and SW205A–1 Helicopters

AGENCY: Federal Aviation Administration, DOT.

ACTION: Final rule; request for comments.

SUMMARY: This amendment supersedes an existing priority letter airworthiness directive (AD), applicable to Bell-manufactured Model HH–1K, TH–1F, TH–1L, UH–1A, UH–1B, UH–1E, UH–1F, UH–1H, UH–1L, and UH–1P helicopters; and Southwest Florida Aviation SW204, SW204HP, and SW205 helicopters, that currently requires modification and inspections of the vertical fin spar. This amendment requires the same modification and inspections required by the existing priority letter AD, but adds the Southwest Florida Aviation Model SW205A–1 and Utah State University UH–1H helicopters to the applicability of this AD. This amendment is prompted by accidents involving in-flight failure of the tailboom vertical fin spar. The actions specified by this AD are intended to prevent in-flight failure of the vertical fin spar and subsequent loss of control of the helicopter.

DATES: Effective May 28, 1998.

Comments for inclusion in the Rules Docket must be received on or before July 13, 1998.

ADDRESSES: Submit comments in triplicate to the Federal Aviation Administration (FAA), Office of the Regional Counsel, Southwest Region, Attention: Rules Docket No. 97–SW–35–AD, 2601 Meacham Blvd., Room 663, Fort Worth, Texas 76137.

FOR FURTHER INFORMATION CONTACT: Mr. Charles Harrison, Aerospace Engineer, FAA, Rotorcraft Directorate, Rotorcraft Certification Office, 2601 Meacham Blvd., Fort Worth, Texas 76137, telephone (817) 222–5447, fax (817) 222–5960.

SUPPLEMENTARY INFORMATION: On September 17, 1997, the FAA issued priority letter AD 97–20–09, applicable to Bell-manufactured Model HH–1K, TH–1F, TH–1L, UH–1A, UH–1B, UH–1E, UH–1F, UH–1H, UH–1L, and UH–1P helicopters; and Southwest Florida Aviation SW204, SW204HP and SW205 helicopters, which requires modification and inspections of the vertical fin spar. That priority letter AD was prompted by two accidents involving in-flight failures of the tailboom vertical fin spars (vertical fin spars) on Model TH–lL and UH–1B helicopters. One other accident occurred on a Model 205A–1 helicopter which is of similar type design. One of the accidents resulted in a fatality. As a result of those accident investigations, the FAA determined that a large number of high-power events can cause fatigue cracks which will cause the vertical fin spar to fail. This condition, if not corrected, could result in in-flight failure of the vertical fin spar and subsequent loss of control of the helicopter.

Since the issuance of that priority letter AD, the FAA has determined that additional helicopter models are affected by the same unsafe condition.

Since an unsafe condition has been identified that is likely to exist or develop on other Bell-manufactured Model HH–1K, TH–1F, TH–1L, UH–1A, UH–1B, UH–1E, UH–1F, UH–1H, UH–1L, and UH–1P helicopters; and Southwest Florida Aviation SW204, SW204HP, SW205, and SW205A–1 helicopters of a similar type design, this AD supersedes priority letter AD 97–20–09 to add the Model SW205A–1 helicopters and the Utah State University UH–1H helicopters to the applicability of this AD. The short compliance time involved is required because the previously described critical unsafe condition can adversely affect the structural integrity of the helicopter. Therefore the inspections and modification are required within 8 hours time-in-service and this AD must be issued immediately.

Since a situation exists that requires the immediate adoption of this regulation, it is found that notice and opportunity for prior public comment hereon are impracticable, and that good cause exists for making this amendment effective in less than 30 days.

The FAA estimates that 68 helicopters of U.S. registry would be affected by this proposed AD, that it would take approximately 2.5 work hours per helicopter for the initial modification and inspection, 200 work hours to replace the vertical fin spar, and that the average labor rate is $60 per work hour. Required parts would cost approximately $8,000 per helicopter to replace the vertical fin spar. Based on these figures, the total cost impact of the proposed AD on U.S. operators is estimated to be $1,370,200 to modify the vertical fin, conduct an initial inspection, and replace the vertical fin spars on all helicopters in the U.S. fleet.

Comments Invited

Although this action is in the form of a final rule that involves requirements affecting flight safety and, thus, was not preceded by notice and an opportunity for public comment, comments are invited on this rule. Interested persons are invited to comment on this rule by submitting such written data, views, or arguments as they may desire. Communications should identify the Rules Docket number and be submitted in triplicate to the address specified under the caption **ADDRESSES.** All communications received on or before the closing date for comments will be considered, and this rule may be amended in light of the comments received. Factual information that supports the commenter's ideas and suggestions is extremely helpful in evaluating the effectiveness of the AD action and determining whether additional rulemaking action would be needed.

Comments are specifically invited on the overall regulatory, economic, environmental, and energy aspects of the rule that might suggest a need to modify the rule. All comments submitted will be available, both before and after the closing date for comments, in the Rules Docket for examination by interested persons. A report that summarizes each FAA-public contact concerned with the substance of this AD will be filed in the Rules Docket.

Commenters wishing the FAA to acknowledge receipt of their comments submitted in response to this rule must submit a self-addressed, stamped postcard on which the following statement is made: ''Comments to Docket No. 97–SW–35–AD.'' The postcard will be date stamped and returned to the commenter.

The regulations adopted herein will not have substantial direct effects on the States, on the relationship between the national government and the States, or on the distribution of power and responsibilities among the various levels of government. Therefore, in accordance with Executive Order 12612, it is determined that this final rule does not have sufficient federalism implications to warrant the preparation of a Federalism Assessment.

The FAA has determined that this regulation is an emergency regulation that must be issued immediately to correct an unsafe condition in aircraft,

and that it is not a ''significant regulatory action'' under Executive Order 12866. It has been determined further that this action involves an emergency regulation under DOT Regulatory Policies and Procedures (44 FR 11034, February 26, 1979). If it is determined that this emergency regulation otherwise would be significant under DOT Regulatory Policies and Procedures, a final regulatory evaluation will be prepared and placed in the Rules Docket. A copy of it, if filed, may be obtained from the Rules Docket at the location provided under the caption **ADDRESSES**.

List of Subjects in 14 CFR Part 39

Air transportation, Aircraft, Aviation safety, Safety.

Adoption of the Amendment

Accordingly, pursuant to the authority delegated to me by the Administrator, the Federal Aviation Administration amends part 39 of the Federal Aviation Regulations (14 CFR part 39) as follows:

PART 39—AIRWORTHINESS DIRECTIVES

1. The authority citation for part 39 continues to read as follows:

Authority: 49 U.S.C. 106(g), 40113, 44701.

§ 39.13 [Amended]

2. Section 39.13 is amended by adding a new airworthiness directive (AD), Amendment 39–10521, to read as follows:

AD 97–20–09 California Department of Forestry; Firefly Aviation Helicopter Services (Previously Erickson Air Crane Co.); Garlick Helicopters, Inc.; Hawkins and Powers Aviation, Inc.; International Helicopters, Inc.; Ranger Helicopter Services; Robinson Aircrane; Scott Paper Co.; Smith Helicopters; Southern Helicopter; Southwest Florida Aviation; Utah State University; Western International Aviation, Inc.; UNC Helicopters; and U.S. Helicopter, Inc.: Amendment 39–10521. Docket No. 97–SW–35–AD. Supersedes priority letter AD 97–20–09.

Applicability: Model HH–1K (Type Certificate Data Sheet (TCDS) H5NM), TH–lF (TCDS H12NM, and R0008AT), TH–1L (TCDS H5NM, H7SO, and H4NM), UH–1A (TCDS H3SO), UH–1B (TCDS H1RM, H3NM, H13WE, H3SO, H5SO, and R00012AT), UH–1E (TCDS H5NM, H7SO, H8NM, and H4NM), UH–1F (TCDS H2NM, H7NE, H11SW, H12NM, and R0008AT), UH–1H (TCDS H13WE, H3SO, and H15NM), UH–lL (TCDS H5NM, H7SO, and H4NM), UH–1P (TCDS H12NM, and R0008AT), and SW204 (TCDS H6SO), SW204HP (TCDS H6SO), SW205 (TCDS H6SO), and SW205A–1 (TCDS H6SO) helicopters, with tailboom vertical fin spar, part number (P/N) 205–032–899, 205–030–846, or 205–032–851, all dash numbers, installed, certificated in any category.

Note 1: This AD applies to each helicopter identified in the preceding applicability provision, regardless of whether it has been modified, altered, or repaired in the area subject to the requirements of this AD. For helicopters that have been modified, altered, or repaired so that the performance of the requirements of this AD is affected, the owner/operator must use the authority provided in paragraph (d) to request approval from the FAA. This approval may address either no action, if the current configuration eliminates the unsafe condition, or different actions necessary to address the unsafe condition described in this AD. Such a request should include an assessment of the effect of the changed configuration on the unsafe condition addressed by this AD. In no case does the presence of any modification, alteration, or repair remove any helicopter from the applicability of this AD.

Compliance: Required as indicated, unless accomplished previously.

To prevent in-flight failure of the tailboom vertical fin spar (vertical fin spar) and subsequent loss of control of the helicopter, accomplish the following:

(a) Within 8 hours time-in-service (TIS) after the effective date of this AD, modify the vertical fin spar as follows:

(1) Remove the 42° gearbox cover and open the drive shaft cover on the vertical fin spar assembly (see Figure 1).

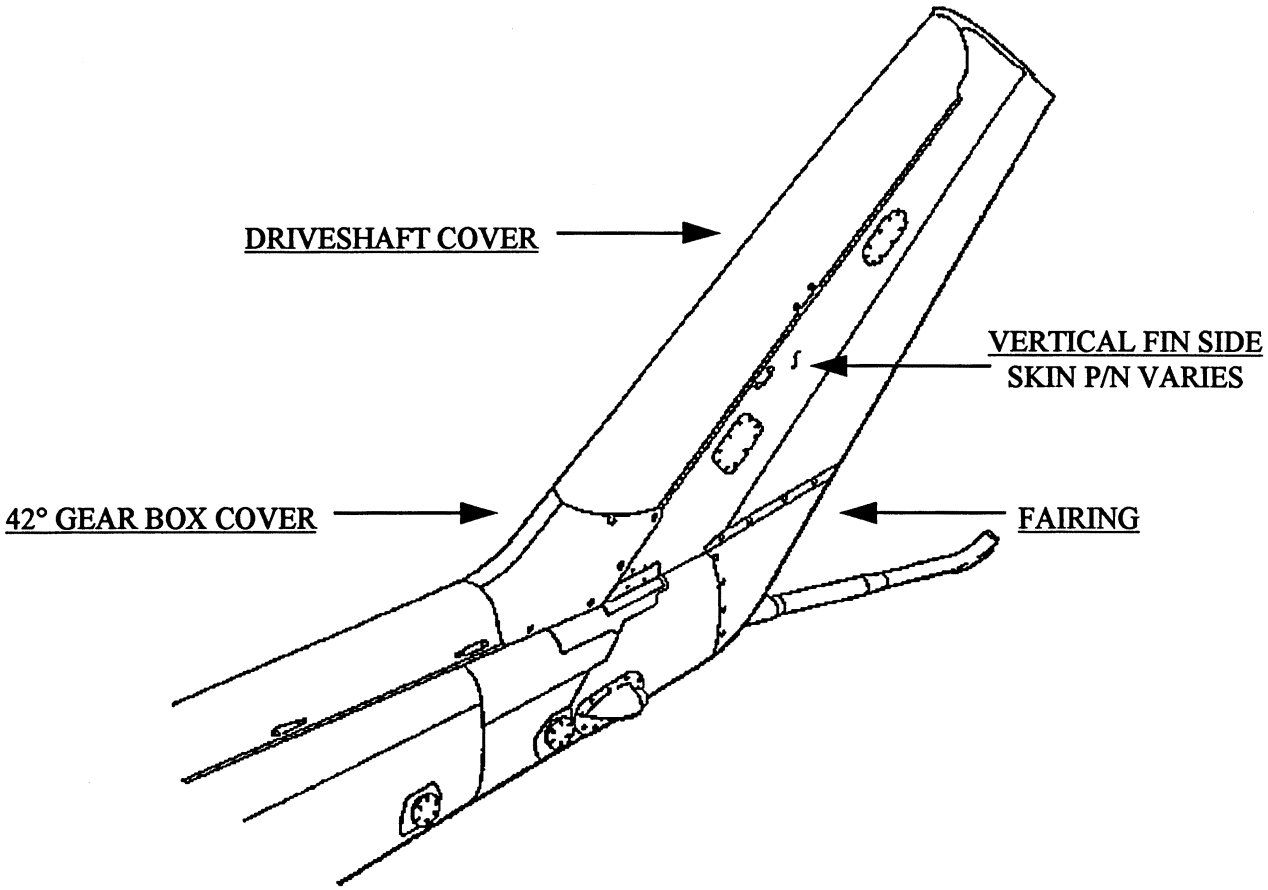

Figure 1

(2) Remove the first four rivets from the vertical fin spar located at the bottom of the vertical fin spar left-hand side at the tailboom and vertical fin spar junction, and the first four rivets aft of the junction along the lower edge of the vertical fin spar side-skin as shown (see Figure 2).

Caution: Extreme care must be taken when drilling and removing rivets from the side of the vertical fin spar to ensure the vertical fin spar assembly is not damaged.

BILLING CODE 4910–13–P

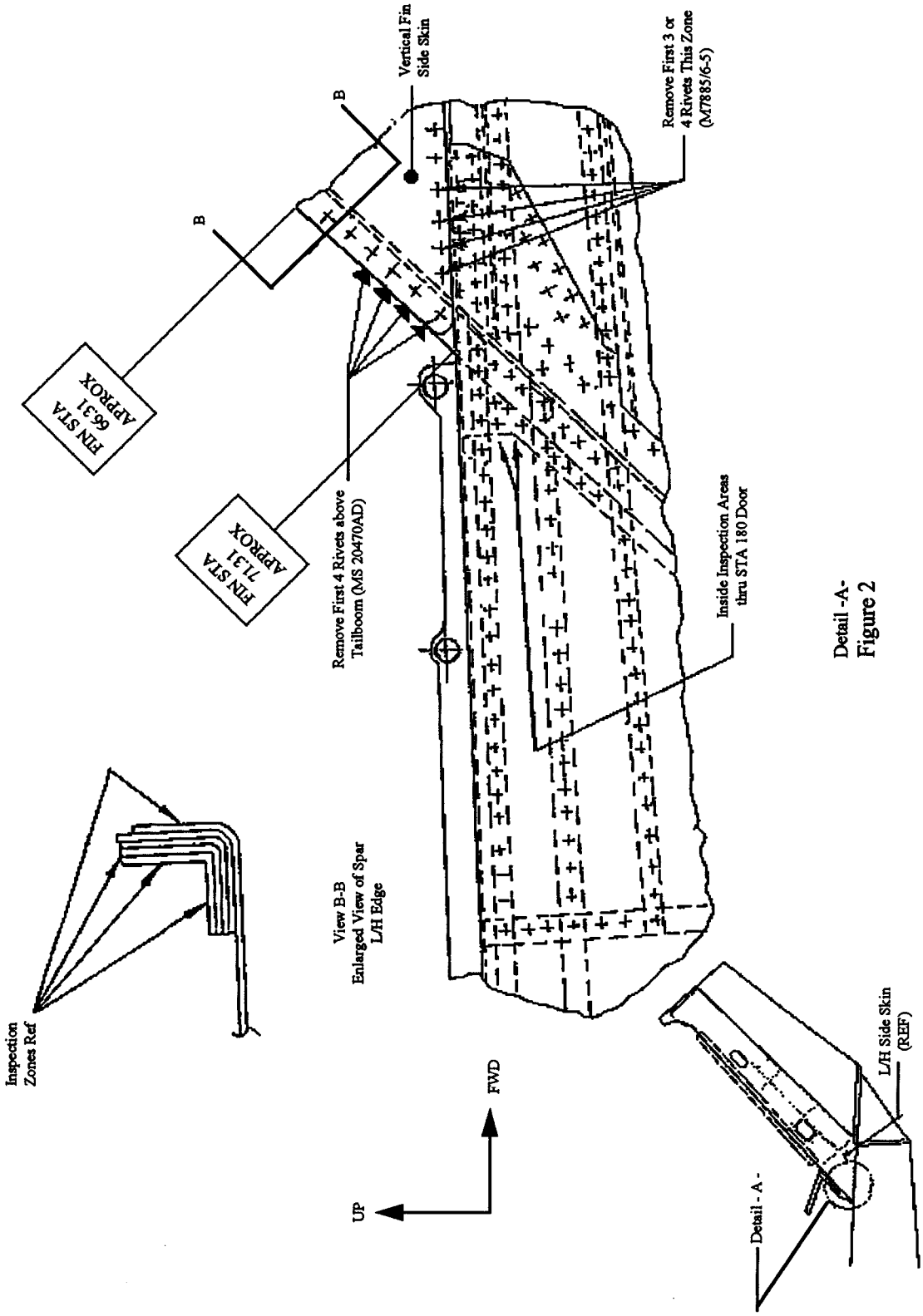

(3) Trim the vertical fin spar left-hand skin using extreme care to not damage the vertical fin spar assembly (see Figure 3).

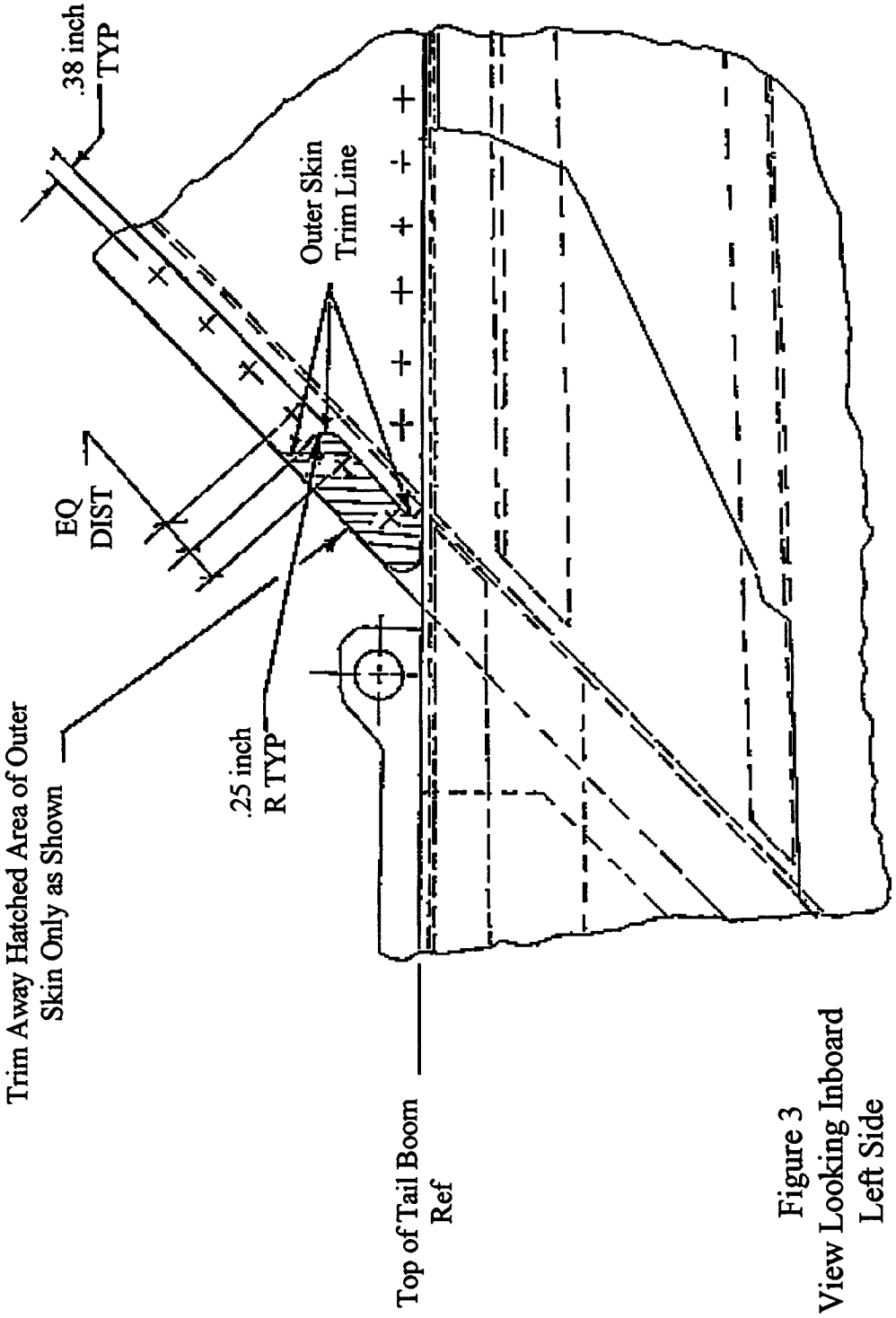

Figure 3
View Looking Inboard
Left Side

BILLING CODE 4910–13–C

(4) Deburr the rivet holes and trimmed skin edges. Remove all debris. In a ventilated work area, remove any surface contaminants with a cloth that has been dampened with aliphatic naphtha or an equivalent cleaning solvent.

(5) Reattach the side-skin to the vertical fin spar using MS 20470AD rivets. DO NOT install the bottom two rivets into the vertical fin spar where the skin was trimmed.

(6) Reinstall the vertical fin spar skin lower edge rivets using M 7885/6–5 rivets (see Figure 2).

(7) Refinish all reworked areas.

(8) After modifying the vertical fin spar, immediately inspect the vertical fin spar in accordance with paragraphs (b)(3) and (b)(4) of this AD.

(b) After the initial modification and inspection of the vertical fin spar have been accomplished in accordance with paragraph (a) of this AD, thereafter, at intervals not to exceed 8 hours TIS, inspect the vertical fin spar for cracks as follows:

(1) Remove the lower aft tailboom inspection door, located at tailboom station 180 (see Figure 4).

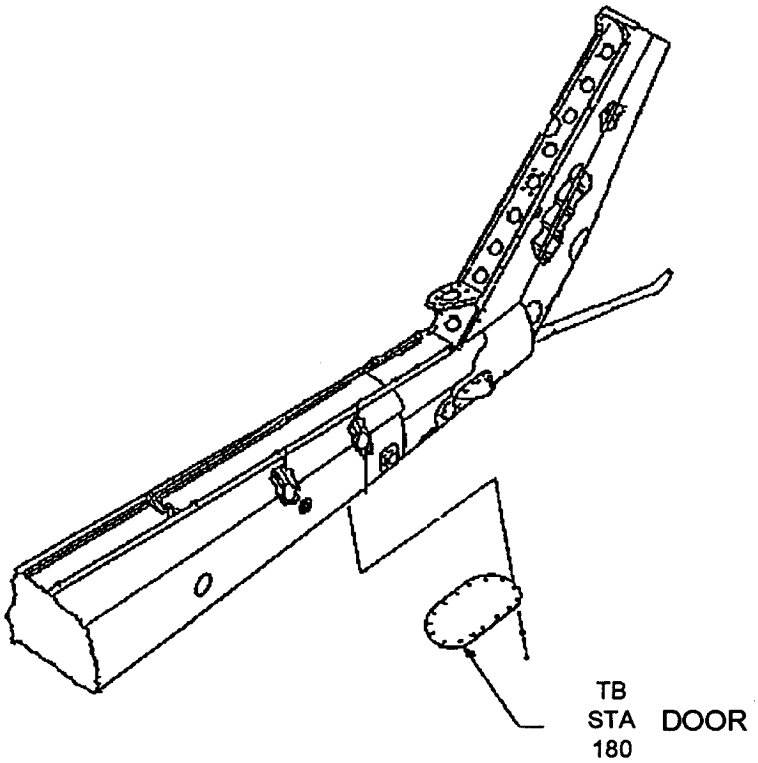

Figure 4

(2) Remove the 42° gearbox cover and open the drive shaft cover on the vertical fin (see Figure 1).

(3) Through the lower aft tailboom inspection door, using a bright light and an inspection mirror, inspect the vertical fin spar assembly adjacent to the tailboom top skin on the forward side, paying special attention to the left-hand edge and the adjacent surfaces (see Figure 2).

(4) In a ventilated work area, clean all surfaces to be inspected with a cloth dampened with aliphatic naphtha or an equivalent cleaning solvent. Using a bright light and a 10x magnifying glass, inspect the vertical fin spar assembly adjacent to the tailboom top-skin on the in-board and out-board sides, the vertical edge, and the two open rivet holes. Using a bright light and a mirror, inspect the aft side of the vertical fin spar in the same area. Special attention must be given to the left-hand edge of the vertical fin spar and any adjacent surfaces between fin stations 66.31 and 71.31 (see Figure 2).

(c) If any crack is discovered on the vertical fin spar as a result of the inspection specified in paragraphs (b)(3) or (b)(4) of this AD, replace the vertical fin spar assembly with an airworthy vertical fin spar assembly before further flight.

(d) An alternative method of compliance or adjustment of the compliance time that provides an acceptable level of safety may be used if approved by the Manager, Rotorcraft Certification Office, FAA. Operators shall submit their requests through an FAA Principal Maintenance Inspector, who may concur or comment and then send it to the Manager, Rotorcraft Certification Office.

Note 2: Information concerning the existence of approved alternative methods of compliance with this AD, if any, may be obtained from the Rotorcraft Certification Office.

(e) Special flight permits may be issued in accordance with §§ 21.197 and 21.199 of the Federal Aviation Regulations (14 CFR 21.197 and 21.199) to operate the helicopter to a location where the requirements of this AD can be accomplished.

(f) This amendment becomes effective on May 28, 1998.

Issued in Fort Worth, Texas, on May 4, 1998.

Eric Bries,

Acting Manager, Rotorcraft Directorate, Aircraft Certification Service.

[FR Doc. 98–12509 Filed 5–12–98; 8:45 am]

BILLING CODE 4910–13–P

DEPARTMENT OF TRANSPORTATION

Federal Aviation Administration

14 CFR Part 71

[Airspace Docket No. 98–ASW–18]

Revocation of Class D Airspace, Lubbock Reese AFB, TX, and Revision of Class E Airspace, Lubbock, TX

AGENCY: Federal Aviation Administration (FAA), DOT.

ACTION: Direct final rule; confirmation of effective date.

SUMMARY: This notice confirms the effective date of a direct final rule which revokes Class D airspace at Lubbock Reese AFB, TX, and revises Class E airspance at Lubbock, TX.

EFFECTIVE DATE: The direct final rule published at 63 FR 11989 is effective 0901 UTC, June 18, 1998.

FOR FURTHER INFORMATION CONTACT: Donald J. Day, Airspace Branch, Air Traffic Division, Southwest Region, Federal Aviation Administration, Fort Worth, TX 76193–0520, telephone: 817–222–5593.

SUPPLEMENTARY INFORMATION: The FAA published this direct final rule with a request for comments in the **Federal Register** on March 12, 1998 (63 FR 11989). The FAA uses the direct final rulemaking procedure for a non-controversial rule where the FAA believes that there will be no adverse public comment. This direct final rule advised the public that no adverse comments were anticipated, and that unless a written adverse comment, or a written notice of intent to submit such an adverse comment, were received within the comment period, the regulation would become effective on June 18, 1998. No adverse comments were received, and thus this action confirms that this direct final rule will be effective on that date.

Issued in Fort Worth, TX, on May 5, 1998.

Albert L. Viselli,

Acting Manager, Air Traffic Division, Southwest Region.

[FR Doc. 98–12711 Filed 5–12–98; 8:45 am]

BILLING CODE 4910–13–M

DEPARTMENT OF TRANSPORTATION

Federal Aviation Administration

14 CFR Part 71

[Airspace Docket No. 98–ASW–19]

Revision of Class E Airspace; Gallup, NM

AGENCY: Federal Aviation Administration (FAA), DOT.

ACTION: Direct final rule; confirmation of effective date.

SUMMARY: This notice confirms the effective date of a direct final rule which revises Class E airspace at Gallup Municipal Airport, Gallup, NM.

EFFECTIVE DATE: The direct final rule published at 63 FR 12989 is effective 0901 UTC, June 18, 1998.

FOR FURTHER INFORMATION CONTACT: Donald J. Day, Airspace Branch, Air Traffic Division, Southwest Region, Federal Aviation Administration, Fort Worth, TX 76193–0520, telephone: 817–222–5593.

SUPPLEMENTARY INFORMATION: The FAA published this direct final rule with a request for comments in the **Federal Register** on March 17, 1998 (63 FR 12989). The FAA uses the direct final rulemaking procedure for a non-controversial rule where the FAA believes that there will be no adverse public comment. This direct final rule advised the public that no adverse comments were anticipated, and that unless a written adverse comment, or a written notice of intent to submit such an adverse comment, were received within the comment period, the regulation would become effective on June 18, 1998. No adverse comments were received, and thus this action confirms that this direct final rule will be effective on that date.

Issued in Fort Worth, TX, on May 5, 1998.

Albert L. Viselli,

Acting Manager, Air Traffic Division, Southwest Region.

[FR Doc. 98–12712 Filed 5–12–98; 8:45 am]

BILLING CODE 4910–13–M

DEPARTMENT OF TRANSPORTATION

Federal Aviation Administration

14 CFR Part 71

[Airspace Docket No. 98–ASW–20]

Revision of Class E Airspace; Eastland Municipal, TX

AGENCY: Federal Aviation Administration (FAA), DOT.

ACTION: Direct final rule; confirmation of effective date.

SUMMARY: This notice confirms the effective date of a direct final rule which revises Class E airspace at Eastland Municipal Airport, Eastland, TX.

EFFECTIVE DATE: The direct final rule published at 63 FR 12988 is effective 0901 UTC, June 18, 1998.

FOR FURTHER INFORMATION CONTACT: Donald J. Day, Airspace Branch, Air Traffic Division, Southwest Region, Federal Aviation Administration, Fort Worth, TX 76193–0520, telephone: 817–222–5593.

SUPPLEMENTARY INFORMATION: The FAA published this direct final rule with a request for comments in the **Federal Register** on March 17, 1998 (63 FR 12988). The FAA uses the direct final rulemaking procedure for a non-controversial rule where the FAA believes that there will be no adverse public comment. This direct final rule advised the public that no adverse comments were anticipated, and that unless a written adverse comment, or a written notice of intent to submit such an adverse comment, were received within the comment period, the regulation would become effective on June 18, 1998. No adverse comments were received, and thus this action confirms that this direct final rule will be effective on that date.

Issued in Fort Worth, TX, on May 5, 1998.

Albert L. Viselli,

Acting Manager, Air Traffic Division, Southwest Region.

[FR Doc. 98–12713 Filed 5–12–98; 8:45 am]

BILLING CODE 4910–13–M

DEPARTMENT OF TRANSPORTATION

Federal Aviation Administration

14 CFR Part 71

[Airspace Docket No. 97–ASW–28]

Revision of Class E Airspace; Bartlesville, OK

AGENCY: Federal Aviation Administration (FAA), DOT.

ACTION: Director final rule; confirmation of effective date.

SUMMARY: This notice confirms the effective date of a direct final rule which revises Class E airspace at Bartlesville, OK.

EFFECTIVE DATE: The direct final rule published at 63 FR 12627 is effective 0901 UTC, June 18, 1998.

FOR FURTHER INFORMATION CONTACT: Donald J. Day, Airspace Branch, Air Traffic Division, Southwest Region, Federal Aviation Administration, Fort Worth, TX 76193–0520, telephone: 817–222–5593.

SUPPLEMENTARY INFORMATION: The FAA published this direct final rule with a request for comments in the **Federal Register** on March 16, 1998 (63 FR 12627). The FAA uses the direct final rulemaking procedure for a non-controversial rule where the FAA believes that there will be no adverse public comment. This direct final rule advised the public that no adverse comments were anticipated, and that unless a written adverse comment, or a written notice of intent to submit such an adverse comment, were received within the comment period, the regulation would become effective on June 18, 1998. No adverse comments were received, and thus this action confirms that this direct final rule will be effective on that date.

Issued in Fort Worth, TX, on May 5, 1998.

Albert L. Viselli,

Acting Manager, Air Traffic Division, Southwest Region.

[FR Doc. 98–12714 Filed 5–12–98; 8:45 am]

BILLING CODE 4910–13–M

DEPARTMENT OF TRANSPORTATION

Federal Aviation Administration

14 CFR Part 71

[Airspace Docket No. 97–ASW–29]

Establishment of Class E Airspace; Cleveland, OK

AGENCY: Federal Aviation Administration (FAA), DOT.

ACTION: Direct final rule; confirmation of effective date.

SUMMARY: This notice confirms the effective date of a direct final rule which establishes Class E airspace at Cleveland, OK.

EFFECTIVE DATE: The direct final rule published at 63 FR 12625 is effective 0901 UTC, June 18, 1998.

FOR FURTHER INFORMATION CONTACT: Donald J. Day, Airspace Branch, Air Traffic Division, Southwest Region, Federal Aviation Administration, Fort Worth, TX 76193–0520, telephone: 817–222–5593.

SUPPLEMENTARY INFORMATION: The FAA published this direct final rule with a request for comments in the **Federal Register** on March 16, 1998 (63 FR 12625). The FAA uses the direct final rulemaking procedure for a non-controversial rule where the FAA believes that there will be no adverse public comment. This direct final rule advised the public that no adverse comments were anticipated, and that unless a written adverse comment, or a written notice of intent to submit such an adverse comment, were received within the comment period, the regulation would become effective on June 18, 1998. No adverse comments were received, and thus this action confirms that this direct final rule will be effective on that date.

Issued in Fort Worth, TX, on May 5, 1998.

Albert L. Viselli,

Acting Manager, Air Traffic Division, Southwest Region.

[FR Doc. 98–12729 Filed 5–12–98; 8:45 am]

BILLING CODE 4910–13–M

DEPARTMENT OF TRANSPORTATION

Federal Aviation Administration

14 CFR Part 71

[Airspace Docket No. 98–ASW–01]

Establishment of Class E Airspace; Coalgate, OK

AGENCY: Federal Aviation Administration (FAA), DOT.

ACTION: Direct final rule; confirmation of effective date.

SUMMARY: This notice confirms the effective date of a direct final rule which establishes Class E airspace at Coalgate, OK.

EFFECTIVE DATE: The direct final rule published at 63 FR 12629 is effective 0901 UTC, June 18, 1998.

FOR FURTHER INFORMATION CONTACT: Donald J. Day, Airspace Branch, Air Traffic Division, Southwest Region, Federal Aviation Administration, Fort Worth, TX 76193–0520, telephone: 817–222–5593.

SUPPLEMENTARY INFORMATION: The FAA published this direct final rule with a request for comments in the **Federal Register** on March 16, 1998 (63 FR 12629). The FAA uses the direct final rulemaking procedure for a non-controversial rule where the FAA believes that there will be no adverse public comment. This direct final rule advised the public that no adverse comments were anticipated, and that unless a written adverse comment, or a written notice of intent to submit such an adverse comment, were received within the comment period, the regulation would become effective on June 18, 1998. No adverse comments were received, and thus this action confirms that this direct final rule will be effective on that date.

Issued in Fort Worth, TX, on May 5, 1998.

Albert L. Viselli,

Acting Manager, Air Traffic Division, Southwest Region.

[FR Doc. 98–12730 Filed 5–12–98; 8:45 am]

BILLING CODE 4910–13–M

DEPARTMENT OF TRANSPORTATION

Federal Aviation Administration

14 CFR Part 71

[Airspace Docket No. 98–ASW–02]

Establishment of Class E Airspace; Pawnee, OK

AGENCY: Federal Aviation Administration (FAA), DOT.

ACTION: Direct final rule; confirmation of effective date.

SUMMARY: This notice confirms the effective date of a direct final rule which establishes Class E airspace at Pawnee, OK.

EFFECTIVE DATE: The direct final rule published at 63 FR 12624 is effective 0901 UTC, June 18, 1998.

FOR FURTHER INFORMATION CONTACT: Donald J. Day, Airspace Branch, Air Traffic Division, Southwest Region, Federal Aviation Administration, Fort Worth, TX 76193–0520, telephone: 817–222–5593.

SUPPLEMENTARY INFORMATION: The FAA published this direct final rule with a request for comments in the **Federal Register** on March 16, 1998 (63 FR 12624). The FAA uses the direct final rulemaking procedure for a non-controversial rule where the FAA believes that there will be no adverse public comment. This direct final rule advised the public that no adverse comments were anticipated, and that unless a written adverse comment, or a written notice of intent to submit such an adverse comment, were received within the comment period, the regulation would become effective on June 18, 1998. No adverse comments were received, and thus this action confirms that this direct final rule will be effective on that date.

Issued in Forth Worth, TX on May 5, 1998.

Albert L. Viselli,

Acting Manager, Air Traffic Division, Southwest Region.

[FR Doc. 98–12731 Filed 5–12–98; 8:45 am]

BILLING CODE 4910–13–M

DEPARTMENT OF TRANSPORTATION

Federal Aviation Administration

14 CFR Part 71

[Airspace Docket No. 98–ASW–03]

Establishment of Class E Airspace; Wagoner, OK

AGENCY: Federal Aviation Administration (FAA), DOT.

ACTION: Direct final rule; confirmation of effective date.

SUMMARY: This notice confirms the effective date of a direct final rule which establishes Class E airspace at Wagoner, OK.

EFFECTIVE DATE: The direct final rule published at 63 FR 12639 is effective 0901 UTC, June 18, 1998.

FOR FURTHER INFORMATION CONTACT: Donald J. Day, Airspace Branch, Air Traffic Division, Southwest Region,

Federal Aviation Administration, Fort Worth, 76193–0520, telephone: 817–222–5593.

SUPPLEMENTARY INFORMATION: The FAA published this direct final rule with a request for comments in the **Federal Register** on March 16, 1998 (63 FR 12639). The FAA uses the direct final rulemaking procedure for a non-controversial rule where the FAA believes that there will be no adverse public comment. This direct final rule advised the public that no adverse comments were anticipated, and that unless a written adverse comment, or a written notice of intent to submit such an adverse comment, were received within the comment period, the regulation would become effective on June 18, 1998. No adverse comments were received, and thus this action confirms that this direct final rule will be effective on that date.

Issued in Fort Worth, TX, on May 5, 1998.

Albert L. Viselli,

Acting Manager, Air Traffic Division, Southwest Region.

[FR Doc. 98–12732 Filed 5–12–98; 8:45 am]

BILLING CODE 4910–13–M

DEPARTMENT OF TRANSPORTATION

Federal Aviation Administration

14 CFR Part 71

[Airspace Docket No. 98–ASW–04]

Revision of Class E Airspace; Bristow, OK

AGENCY: Federal Aviation Administration (FAA), DOT.

ACTION: Direct final rule; confirmation of effective date.

SUMMARY: This notice confirms the effective date of a direct final rule which revises Class E airspace at Bristow, OK.

EFFECTIVE DATE: The direct rule published at 63 FR 12618 is effective 0901 UTC, June 18, 1998.

FOR FURTHER INFORMATION CONTACT: Donald J. Day, Airspace Branch, Air Traffic Division, Southwest Region, Federal Aviation Administration, Fort Worth, TX 76193–0520, telephone: 817–222–5593.

SUPPLEMENTARY INFORMATION: The FAA published this direct final rule with a request for comments in the **Federal Register** on March 16, 1998 (63 FR 12618). The FAA uses the direct final rulemaking procedure for a non-controversial rule where the FAA believes that there will be no adverse public comment. This direct final rule advised the public that no adverse comments were anticipated, and that unless a written adverse comment, or a written notice of intent to submit such an adverse comment, were received within the comment period, the regulation would become effective on June 18, 1998. No adverse comments were received, and thus this action confirms that this direct final rule will be effective on that date.

Issued in Forth Worth, TX, on May 5, 1996.

Albert L. Viselli,

Acting Manager, Air Traffic Division, Southwest Region.

[FR Doc. 98–12733 Filed 5–12–98; 8:45 am]

BILLING CODE 4910–13–M

DEPARTMENT OF TRANSPORTATION

Federal Aviation Administration

14 CFR Part 71

[Airspace Docket No. 98–ASW–05]

Revision of Class E Airspace; Claremore, OK

AGENCY: Federal Aviation Administration (FAA), DOT.

ACTION: Direct final rule; confirmation of effective date.

SUMMARY: This notice confirms the effective date of a direct final rule which revises Class E airspace at Claremore, OK.

EFFECTIVE DATE: The direct final rule published at 63 FR 12638 is effective 0901 UTC, June 18, 1998.

FOR FURTHER INFORMATION CONTACT: Donald J. Day, Airspace Branch, Air Traffic Division, Southwest Region, Federal Aviation Administration, Fort Worth, TX 76193–0520, telephone: 817–222–5593.

SUPPLEMENTARY INFORMATION: The FAA published this direct final rule with a request for comments in the **Federal Register** on March 16, 1998 (63 FR 12638). The FAA uses the direct final rulemaking procedure for a non-controversial rule where the FAA believes that there will be no adverse public comment. This direct final rule advised the public that no adverse comments were anticipated, and that unless a written adverse comment, or a written notice of intent to submit such an adverse comment, were received within the comment period, the regulation would become effective on June 18, 1998. No adverse comments were received, and thus this action confirms that this direct final rule will be effective on that date.

Issued in Fort Worth, TX, on May 5, 1998.

Albert L. Viselli,

Acting Manager, Air Traffic Division, Southwest Region.

[FR Doc. 98–12734 Filed 5–12–98; 8:45 am]

BILLING CODE 4910–13–M

DEPARTMENT OF TRANSPORTATION

Federal Aviation Administration

14 CFR Part 71

[Airspace Docket No. 98–ASW–06]

Revision of Class E Airspace; Shawnee, OK

AGENCY: Federal Aviation Administration (FAA), DOT.

ACTION: Direct final rule; confirmation of effective date.

SUMMARY: This notice confirms the effective date of a direct final rule which revises Class E airspace at Shawnee, OK.

EFFECTIVE DATE: The direct final rule published at 63 FR 12637 is effective 0901 UTC, June 18, 1998.

FOR FURTHER INFORMATION CONTACT: Donald J. Day, Airspace Branch, Air Traffic Division, Southwest Region, Federal Aviation Administration, Fort Worth, TX 76193–0520, telephone: 817–222–5593.

SUPPLEMENTARY INFORMATION: The FAA published this direct final rule with a request for comments in the **Federal Register** on March 16, 1998 (63 FR 12637). The FAA uses the direct final rulemaking procedure for a non-controversial rule where the FAA believes that there will be no adverse public comment. This direct final rule advised the public that no adverse comments were anticipated, and that unless a written adverse comment, or a written notice of intent to submit such an adverse comment, were received within the comment period, the regulation would become effective on June 18, 1998. No adverse comments were received, and thus this action confirms that this direct final rule will be effective on that date.

Issued in Fort Worth, TX, on May 5, 1998.

Albert L. Viselli,

Acting Manager, Air Traffic Division, Southwest Region.

[FR Doc. 98–12735 Filed 5–12–98; 8:45 am]

BILLING CODE 4910–13–M

DEPARTMENT OF TRANSPORTATION

Federal Aviation Administration

14 CFR Part 71

[Airspace Docket No. 98–ASW–12]

Revision of Class E Airspace; Muskogee, OK

AGENCY: Federal Aviation Administration (FAA), DOT.

ACTION: Direct final rule; confirmation of effective date.

SUMMARY: This notice confirms the effective date of a direct final rule which revises Class E airspace at Muskogee, OK.

EFFECTIVE DATE: The direct final rule published at 63 FR 12628 is effective 0901 UTC, June 18, 1998.

FOR FURTHER INFORMATION CONTACT: Donald J. Day, Airspace Branch, Air Traffic Division, Southwest Region, Federal Aviation Administration, Fort Worth, TX 76193–0520, telephone: 817–222–5593.

SUPPLEMENTARY INFORMATION: The FAA published this direct final rule with a request for comments in the **Federal Register** on March 16, 1998 (63 FR 12628). The FAA uses the direct final rulemaking procedure for a non-controversial rule where the FAA believes that there will be no adverse public comment. This direct final rule advised the public that no adverse comments were anticipated, and that unless a written adverse comment, or a written notice of intent to submit such an adverse comment, were received within the comment period, the regulation would become effect on June 18, 1988. No adverse comments were received, and thus this action confirms that this direct final rule will be effective on that date.

Issued in Fort Worth, TX, on May 5, 1998.

Albert L. Viselli,

Acting Manager, Air Traffic Division, Southwest Region.

[FR Doc. 98–12736 Filed 5–12–98; 8:45 am]

BILLING CODE 4910–13–M

DEPARTMENT OF TRANSPORTATION

Federal Aviation Administration

14 CFR Part 71

[Airspace Docket No. 98–ASW–13]

Revision of Class E Airspace; Poteau, OK

AGENCY: Federal Aviation Administration (FAA), DOT.

ACTION: Director final rule; confirmation of effective date.

SUMMARY: This notice confirms the effective date of a direct final rule which revises Class E airspace at Poteau, OK.

EFFECTIVE DATE: The direct final rule published at 63 FR 12633 is effective 0901 UTC, June 18, 1998.

FOR FURTHER INFORMATION CONTACT: Donald J. Day, Airspace Branch, Air Traffic Division, Southwest Region, Federal Aviation Administration, Fort Worth, TX 76193–0520, telephone: 817–222–5593.

SUPPLEMENTARY INFORMATION: The FAA published this direct final rule with a request for comments in the **Federal Register** on March 16, 1998 (63 FR 12633). The FAA uses the direct final rulemaking procedure for a non-controversial rule where the FAA believes that there will be no adverse public comment. This direct final rule advised the public that no adverse comments were anticipated, and that unless a written adverse comment, or a written notice of intent to submit such an adverse comment, were received within the comment period, the regulation would become effective on June 18, 1998. No adverse comments were received, and thus this action confirms that this direct final rule will be effective on that date.

Issued in Fort Worth, TX, on May 5, 1998.

Albert L. Viselli,

Acting Manager, Air Traffic Division, Southwest Region.

[FR Doc. 98–12737 Filed 5–12–98; 8:45 am]

BILLING CODE 4019–13–M

DEPARTMENT OF TRANSPORTATION

Federal Aviation Administration

14 CFR Part 71

[Airspace Docket No. 98–ASW–14]

Revision of Class E Airspace; Pryor, OK

AGENCY: Federal Aviation Administration (FAA), DOT.

ACTION: Direct final rule; confirmation of effective date.

SUMMARY: This notice confirms the effective date of a direct final rule which revises Class E airspace at Pryor, OK.

EFFECTIVE DATE: The direct final rule published at 63 FR 12632 is effective 0901 UTC, June 18, 1998.

FOR FURTHER INFORMATION CONTACT: Donald J. Day, Airspace Branch, Air Traffic Division, Southwest Region, Federal Aviation Administration, Fort Worth, TX 76193–0520, telephone: 817–222–5593.

SUPPLEMENTARY INFORMATION: The FAA published this direct final rule with a request for comments in the **Federal Register** on March 16, 1998 (63 FR 12632). The FAA uses the direct final rulemaking procedure for a non-controversial rule where the FAA believes that there will be no adverse public comment. This direct final rule advised the public that no adverse comments were anticipated, and that unless a written adverse comment, or a written notice of intent to submit such an adverse comment, were received within the comment period, the regulation would become effective on June 18, 1988. No adverse comments were received, and thus this action confirms that this direct final rule will be effective on that date.

Issued in Fort Worth, TX, on May 5, 1998.

Albert L. Viselli,

Acting Manager, Air Traffic Division, Southwest Region.

[FR Doc. 98–12738 Filed 5–12–98; 8:45 am]

BILLING CODE 4910–13–M

DEPARTMENT OF TRANSPORTATION

Federal Aviation Administration

14 CFR Part 71

[Airspace Docket No. 98–ASW–15]

Establishment of Class E Airspace; Stillwater, OK

AGENCY: Federal Aviation Administration (FAA), DOT.

ACTION: Direct final rule; confirmation of effective date.

SUMMARY: This notice confirms the effective date of a direct final rule which revises Class E airspace at Stillwater, OK.

EFFECTIVE DATE: The direct final rule published at 63 FR 12630 is effective 0901 UTC, June 18, 1998.

FOR FURTHER INFORMATION CONTACT: Donald J. Day, Airspace Branch, Air Traffic Division, Southwest Region, Federal Aviation Administration, Fort Worth, TX 76193–0520, telephone: 817–222–5593.

SUPPLEMENTARY INFORMATION: The FAA published this direct final rule with a request for comments in the **Federal Register** on March 16, 1998 (63 FR 12630). The FAA uses the direct final rulemaking procedure for a non-controversial rule where the FAA believes that there will be no adverse public comment. This direct final rule advised the public that no adverse

comments were anticipated, and that unless a written adverse comment, or a written notice of intent to submit such an adverse comment, were received within the comment period, the regulation would become effective on June 18, 1998. No adverse comments were received, and thus this action confirms that this direct final rule will be effective on that date.

Issued in Fort Worth, TX, on May 5, 1998.

Albert L. Viselli,

Acting Manager, Air Traffic Division, Southwest Region.

[FR Doc. 98–12739 Filed 5–12–98; 8:45 am]

BILLING CODE 4910–13–M

DEPARTMENT OF TRANSPORTATION

Federal Aviation Administration

14 CFR Part 71

[Airspace Docket No. 98–ASW–16]

Revision of Class E Airspace; Tahlequah, OK

AGENCY: Federal Aviation Administration (FAA), DOT.

ACTION: Direct final rule; confirmation of effective date.

SUMMARY: This notice confirms the effective date of a direct final rule which revises Class E airspace at Tahlequah, OK.

EFFECTIVE DATE: The direct final rule published at 63 FR 12634 is effective 0901 UTC, June 18, 1998.

FOR FURTHER INFORMATION CONTACT: Donald J. Day, Airspace Branch, Air Traffic Division, Southwest Region, Federal Aviation Administration, Fort Worth, TX 76193–0520, telephone 817–222–5593.

SUPPLEMENTARY INFORMATION: The FAA published this direct final rule with a request for comments in the **Federal Register** on March 16, 1998 (63 FR 12634). The FAA uses the direct final rulemaking procedure for a non-controversial rule where the FAA believes that there will be no adverse public comment. This direct final rule advised the public that no adverse comments were anticipated, and that unless a written adverse comment, or a written notice of intent to submit such an adverse comment, were received within the comment period, the regulation would become effective on June 18, 1998. No adverse comments were received, and thus this action confirms that this direct final rule will be effective on that date.

Issued in Fort Worth, TX, on May 5, 1998.

Albert L. Viselli,

Acting Manager, Air Traffic Division, Southwest Region.

[FR Doc. 98–12740 Filed 5–12–98; 8:45 am]

BILLING CODE 4910–13–M

DEPARTMENT OF TRANSPORTATION

Federal Aviation Administration

14 CFR Part 71

[Airspace Docket No. 98–ASW–07]

Revision of Class E Airspace; Grove, OK

AGENCY: Federal Aviation Administration (FAA), DOT.

ACTION: Direct final rule; confirmation of effective date.

SUMMARY: This notice confirms the effective date of a direct final rule which revises Class E airspace at Grove, OK.

EFFECTIVE DATE: The direct final rule published at 63 FR 12635 is effective 0901 UTC, June 18, 1998.

FOR FURTHER INFORMATION CONTACT: Donald J. Day, Airspace Branch, Air Traffic Division, Southwest Region, Federal Aviation Administration, Fort Worth, TX 76193–0520, telephone: 817–222–5593.

SUPPLEMENTARY INFORMATION: The FAA published this direct final rule with a request for comments in the **Federal Register** on March 16, 1998 (63 FR 12635). The FAA uses the direct final rulemaking procedure for a non-controversial rule where the FAA believes that there will be no adverse public comment. This direct final rule advised the public that no adverse comments were anticipated, and that unless a written adverse comment, or a written notice of intent to submit such an adverse comment, were received within the comment period, the regulation would become effective on June 18, 1998. No adverse comments were received, and thus this action confirms that this direct final rule will be effective on that date.

Issued in Fort Worth, TX, on May 5, 1998.

Albert L. Viselli,

Acting Manager, Air Traffic Division, Southwest Region.

[FR Doc. 98–12742 Filed 5–12–98; 8:45 am]

BILLING CODE 4910–13–M

DEPARTMENT OF TRANSPORTATION

Federal Aviation Administration

14 CFR Part 71

[Airspace Docket No. 98–ASW–08]

Revision of Class E Airspace; Henryetta, OK

AGENCY: Federal Aviation Administration (FAA), DOT.

ACTION: Director final rule; confirmation of effective date.

SUMMARY: This notice confirms the effective date of a direct final rule which revises Class E airspace at Henryetta, OK.

EFFECTIVE DATE: The direct final rule published at 63 FR 12622 is effective 0901 UTC, June 18, 1998.

FOR FURTHER INFORMATION CONTACT: Donald J. Day, Airspace Branch, Air Traffic Division, Southwest Region, Federal Aviation Administration, Fort Worth, TX 76193–0520, telephone: 817–222–5593.

SUPPLEMENTARY INFORMATION: The FAA published this direct final rule with a request for comments in the **Federal Register** on March 16, 1998 (63 FR 12622). The FAA uses the direct final rulemaking procedure for a non-controversial rule where the FAA believes that there will be no adverse public comment. This direct final rule advised the public that no adverse comments were anticipated, and that unless a written adverse comment, or a written notice of intent to submit such an adverse comment, were received within the comment period, the regulation would become effective on June 18, 1998. No adverse comments were received, and thus this action confirms that this direct final rule will be effective on that date.

Issued in Fort Worth, TX, on May 5, 1998.

Albert L. Viselli,

Acting Manager, Air Traffic Division, Southwest Region.

[FR Doc. 98–12743 Filed 5–12–98; 8:45 am]

BILLING CODE 4019–13–M

DEPARTMENT OF TRANSPORTATION

Federal Aviation Administration

14 CFR Part 71

[Airspace Docket No. 98–ASW–09]

Revision of Class E Airspace; Idabel, OK

AGENCY: Federal Aviation Administration (FAA), DOT.

ACTION: Direct final rule; confirmation of effective date.

SUMMARY: This notice confirms the effective date of a direct final rule which revises Class E airspace at Idabel, OK.

EFFECTIVE DATE: The direct final rule published at 63 FR 12620 is effective 0901 UTC, June 18, 1998.

FOR FURTHER INFORMATION CONTACT: Donald J. Day, Airspace Branch, Air Traffic Division, Southwest Region, Federal Aviation Administration, Fort Worth, TX 76193–0520, telephone: 817–222–5593.

SUPPLEMENTARY INFORMATION: The FAA published this direct final rule with a request for comments in the **Federal Register** on March 16, 1998 (63 FR 12620). The FAA uses the direct final rulemaking procedure for a non-controversial rule where the FAA believes that there will be no adverse public comment. This direct final rule advised the public that no adverse comments were anticipated, and that unless a written adverse comment, or a written notice of intent to submit such an adverse comment, were received within the comment period, the regulation would become effective on June 18, 1998. No adverse comments were received, and thus this action confirms that this direct final rule will be effective on that date.

Issued in Fort Worth, TX, on May 5, 1998.

Albert L. Viselli,

Acting Manager, Air Traffic Division, Southwest Region.

[FR Doc. 98–12744 Filed 5–12–98; 8:45 am]

BILLING CODE 4910–13–M

DEPARTMENT OF TRANSPORTATION

Federal Aviation Administration

14 CFR Part 71

[Airspace Docket No. 98–ASW–10]

Revision of Class E Airspace; McAlester, OK

AGENCY: Federal Aviation Administration (FAA), DOT.

ACTION: Direct final rule; confirmation of effective date.

SUMMARY: This notice confirms the effective date of a direct final rule which revises Class E airspace at McAlester, OK.

EFFECTIVE DATE: The direct final rule published at 63 FR 12623 is effective 0901 UTC, June 18, 1998.

FOR FURTHER INFORMATION CONTACT: Donald J. Day, Airspace Branch, Air Traffic Division, Southwest Region, Federal Aviation Administration, Fort Worth, TX 76193–0520, telephone: 817–222–5593.

SUPPLEMENTARY INFORMATION: The FAA published this direct final rule with a request for comments in the **Federal Register** on March 16, 1998 (63 FR 12623). The FAA uses the direct final rulemaking procedure for a non-controversial rule where the FAA believes that there will be no adverse public comment. This direct final rule advised the public that no adverse comments were anticipated, and that unless a written adverse comment, or a written notice of intent to submit such an adverse comment, were received within the comment period, the regulation would become effective on June 18, 1998. No adverse comments were received, and thus this action confirms that this direct final rule will be effective on that date.

Issued in Forth Worth, TX, on May 5, 1998.

Albert L. Viselli,

Acting Manager, Air Traffic Division, Southwest Region.

[FR Doc. 98–12745 Filed 5–12–98; 8:45 am]

BILLING CODE 4910–13–M

DEPARTMENT OF TRANSPORTATION

Federal Aviation Administration

14 CFR Part 71

[Airspace Docket No. 98–ASW–11]

Establishment of Class E Airspace; Miami, OK

AGENCY: Federal Aviation Administration (FAA), DOT.

ACTION: Direct final rule; confirmation of effective date.

SUMMARY: This notice confirms the effective date of a direct final rule which establishes Class E airspace at Miami, OK.

EFFECTIVE DATE: The direct final rule published at 63 FR 12619 is effective 0901 UTC, June 18, 1998.

FOR FURTHER INFORMATION CONTACT: Donald J. Day, Airspace Branch, Air Traffic Division, Southwest Region, Federal Aviation Administration, Fort Worth, TX 76193–0520, telephone: 817–222–5593.

SUPPLEMENTARY INFORMATION: The FAA published this direct final rule with a request for comments in the **Federal Register** on March 16, 1998 (63 FR 12619). The FAA uses the direct final rulemaking procedure for a non-controversial rule where the FAA believes that there will be no adverse public comment. This direct final rule advised the public that no adverse comments were anticipated, and that unless a written adverse comment, or a written notice of intent to submit such an adverse comment, were received within the comment period, the regulation would become effective on June 18, 1998. No adverse comments were received, and thus this action confirms that this direct final rule will be effective on that date.

Issued in Fort Worth, TX, on May 5, 1998.

Albert L. Viselli,

Acting Manager, Air Traffic Division, Southwest Region.

[FR Doc. 98–12746 Filed 5–12–98; 8:45 am]

BILLING CODE 4910–13–M

DEPARTMENT OF THE INTERIOR

Office of Surface Mining Reclamation and Enforcement

30 CFR Part 920

[MR–041–FOR]

Maryland Regulatory Program

AGENCY: Office of Surface Mining Reclamation and Enforcement (OSM), Interior.

ACTION: Final rule; approval of amendment.

SUMMARY: OSM is approving a proposed amendment to the Maryland regulatory program (hereinafter referred to as the ''Maryland program'') under the Surface Mining Control and Reclamation Act of 1977 (SMCRA). Maryland proposed revisions to its regulations pertaining to bonding. The amendment is intended to revise the Maryland program to be consistent with the corresponding Federal regulations and SMCRA.

EFFECTIVE DATE: May 13, 1998.

FOR FURTHER INFORMATION CONTACT: George Rieger, Program Manager, OSM, Appalachian Regional Coordinating Center, 3 Parkway Center, Pittsburgh, PA 15220. Telephone: (412) 937–2153.

SUPPLEMENTARY INFORMATION:

I. Background on the Maryland Program.
II. Submission of the Proposed Amendment.
III. Director's Findings.
IV. Summary and Disposition of Comments.
V. Director's Decision.
VI. Procedural Determinations.

I. Background on the Maryland Program

On December 1, 1980, the Secretary of the Interior conditionally approved the Maryland program. Background information on the Maryland program, including the Secretary's findings, the disposition of comments, and the

conditions of approval can be found in the December 1, 1980, **Federal Register** (45 FR 79449). Subsequent actions concerning conditions of approval and program amendments can be found at 30 CFR 920.12, 920.15, and 920.16.

II. Submission of the Proposed Amendment

By letter dated March 6, 1997 (Administrative Record No, MD–552.18), Maryland submitted a proposed amendment to its program pursuant to SMCRA in response to required amendments at 30 CFR 920.16 (h), (i), (j), and (n). Maryland is revising the Code of Maryland Regulations (COMAR) at section 26.20.14.01B—Performance Bonds. Specifically, Maryland proposes to require that a performance bond be conditioned upon the permittee faithfully performing every requirement of Subtitle 5 of the Annotated Code of Maryland, the Regulatory Program, the permit, and the reclamation plan. Maryland is also formally submitting an actuarial study which reviews the adequacy of its alternative bonding system.

OSM announced receipt of the proposed amendment in the March 25, 1997, **Federal Register** (62 FR 14079), and in the same document opened the public comment period and provided an opportunity for a public hearing on the adequacy of the proposed amendment. The public comment period closed on April 24, 1997. OSM reopened the public comment period on April 6, 1998 (63 FR 16730) and clarified that Maryland's alternative bonding system was originally submitted with the understanding that it would cover acid mine drainage. Further, Maryland submitted additional changes to its program at COMAR 26.20.14.03 and 26.20.14.04 which pertain to performance bond requirements. In 1991, OSM approved changes to former COMAR 08.13.09.15C (now 26.20.14.03) and COMAR 08.13.09.15D (now 26.20.14.04) [56 FR 63649, December 5, 1991]. However, Maryland subsequently chose not to promulgate these approved changes. Instead, it now proposes to readopt the language at these sections. The comment period closed on April 21, 1998.

III. Director's Findings

Set forth below, pursuant to SMCRA and the Federal regulations at 30 CFR 732.15 and 732.17, are the Director's findings concerning the proposed amendment. Revisions not specifically discussed below concern nonsubstantive wording changes and paragraph notations to reflect organizational changes resulting from this amendment.

1. *COMAR 26.20.14.01B—Performance Bonds.* Maryland is proposing to require that performance bonds be payable to the State, on forms provided by the Bureau of Mines, and conditioned on the permittee faithfully performing every requirement of Environmental Article, Title 15, Subtitle 5, Annotated Code of Maryland, the Regulatory Program, the permit, and the reclamation plan. The Director finds that the proposed revision is no less effective than the Federal regulation at 30 CFR 800.11(a) and he is removing the required amendment at 30 CFR 920.16(h).

2. *COMAR 26.20.14.03—Performance Bonds (formerly 08.13.09.15C).* Maryland is proposing to require that the amount of the performance bond be based upon the estimated cost to perform the reclamation required to achieve compliance with the regulatory program and the requirements of the permit in the event of a forfeiture. In addition, a separate bond for revegetation in the amount of $600 per acre of affected land and a general bond in the amount of $1500 per acre for the approved open acre limit is established. The Director finds that the proposed revision is no less effective than the Federal regulation at 30 CFR 800.14(b).

3. *COMAR 26.20.14.04—Performance Bonds (formerly 08.13.09.15D).* Maryland is proposing to require that the amount of the performance bond be adjusted as acreage in the permit area is revised, methods of mining operation change, standards of reclamation change, or when the cost of reclamation or restoration work changes. The Director finds that the proposed revision is no less effective than the Federal regulation at 30 CFR 800.15(a) and he is removing the required amendment at 30 CFR 920.16(j).

4. *Actuarial Study.* Maryland is formally submitting ''Actuarial Analysis of the Alternative Bonding System for Surface Mine Reclamation'' prepared by Arthur Andersen LLP (Administrative Record No. MD–552–12). The analysis concluded that Maryland's bonding system appears to be solvent on a short term basis. Short term solvency was defined as ''the ability to pay for all currently outstanding known reclamations plus one average cost reclamation project.'' The analysis also concluded that Maryland's long term solvency based on its current rate structure is adequate until 1999, at which time rates may have to be adjusted for inflation. Long term solvency was defined as the ability of the fund to collect sufficient revenue to pay for reclamation costs incurred in the future. Several recommendations were made concerning fund caps, bond amounts, contingency reserves, and catastrophe plans. OSM reviewed the document and concluded that the study was comprehensive and closely aligned with OSM's bonding guidance document, ''Alternative Bonding Systems: An Analytical Approach and Identified Factors to Consider for Evaluating Alternative Bonding Systems.'' Maryland's alternative bonding system was originally submitted with the understanding that it would cover acid mine drainage. Maryland has since adopted a policy that will limit the liability of the alternative bonding system by increasing the permittee's individual bond amount where unanticipated acid mine drainage develops on a site. The Director is approving Maryland's alternative bonding system based on the results of the actuarial study. Maryland's bonding system achieves the objectives of and is no less effective than the Federal regulations at 30 CFR 800.11(e). He is removing the required amendments at 30 CFR 920.16(i) and (n).

IV. Summary and Disposition of Comments

Public Comments

The Director solicited public comments and provided an opportunity for a public hearing on the proposed amendment. No comments were received and because no one requested an opportunity to speak at a public hearing, no hearing was held.

Federal Agency Comments

Pursuant to 30 CFR 732.17(h)(11)(i), the Director solicited comments on the proposed amendment from various Federal agencies with an actual or potential interest in the Maryland program. The U.S. Department of Labor, Mine Safety and Health Administration and the U.S. Department of the Army, Army Corps of Engineers, concurred without comment.

Environmental Protection Agency (EPA)

Pursuant to 30 CFR 732.17(h)(11)(ii), OSM is required to obtain the written concurrence of the EPA with respect to those provisions of the proposed program amendment that relate to air or water quality standards promulgated under the authority of the Clean Water Act (33 U.S.C. 1251 *et seq.*) or the Clean Air Act (42 U.S.C. 7401 *et seq.*). None of the revisions that Maryland proposed to make in this amendment pertains to air or water quality standards.

Therefore, OSM did not request EPA's concurrence.

The Federal regulations at 30 CFR Part 920, codifying decisions concerning the Maryland program, are being amended to implement this decision. This final rule is being made effective immediately to expedite the State program amendment process and to encourage States to bring their programs into conformity with the Federal standards without undue delay. Consistency of State and Federal standards is required by SMCRA.

V. Director's Decision

Based on the above findings, the Director approves Maryland's proposed amendment as submitted on March 6, 1997. As discussed in Finding 1, the Director is removing the required amendment at 30 CFR 920.16(h). As discussed in Finding 4, the Director is removing the required amendments at 30 CFR 920.16 (i) and (n). He is also removing the required amendment at 30 CFR 920.16(j) because at COMAR 26.20.14.04A, Maryland is required to adjust the amount of the performance bond liability as acreage in the permit area is revised, as discussed in Finding 3.

The Federal regulations at 30 CFR Part 920, codifying decisions concerning the Maryland program, are being amended to implement this decision. This final rule is being made effective immediately to expedite the State program amendment process and to encourage States to bring their programs into conformity with the Federal standards without undue delay. Consistency of State and Federal standards is required by SMCRA.

VI. Procedural Determinations

Executive Order 12866

This rule is exempted from review by the Office of Management and Budget (OMB) under Executive Order 12866 (Regulatory Planning and Review).

Executive Order 12988

The Department of the Interior has conducted the reviews required by section 3 of Executive Order 12988 (Civil Justice Reform) and has determined that, to the extent allowed by law, this rule meets the applicable standards of subsections (a) and (b) of that section. However, these standards are not applicable to the actual language of State regulatory programs and program amendments since each such program is drafted and promulgated by a specific State, not by OSM. Under sections 503 and 505 of SMCRA (30 U.S.C. 1253 and 1255) and 30 CFR 730.11, 732.15, and 732.17(h)(10), decisions on proposed State regulatory programs and program amendments submitted by the States must be based solely on a determination of whether the submittal is consistent with SMCRA and its implementing Federal regulations and whether the other requirements of 30 CFR Parts 730, 731, and 732 have been met.

National Environmental Policy Act

No environmental impact statement is required for this rule since section 702(d) of SMCRA (30 U.S.C. 1292(d)) provides that agency decisions on proposed State regulatory program provisions do not constitute major Federal actions within the meaning of section 102(2)(C) of the National Environmental Policy Act (42 U.S.C. 4332(2)(C)).

Paperwork Reduction Act

This rule does not contain information collection requirements that require approval by OMB under the Paperwork Reduction Act (44 U.S.C. 3507 *et seq.*)

Regulatory Flexibility Act

The Department of the Interior has determined that this rule will have a significant economic impact on a substantial number of small entities under the Regulatory Flexibility Act (5 U.S.C. 601 *et seq.*). The State submittal which is the subject of this rule is based upon corresponding Federal regulations for which an economic analysis was prepared and certification made that such regulations would not have a significant economic effect upon a submittal number of small entities. Accordingly, this rule will ensure that existing requirements previously promulgated by OSM will be implemented by the State. In making the determination as to whether this rule would have a significant economic impact, the Department relied upon the data and assumptions for the corresponding Federal regulations.

Unfunded Mandates

This rule will not impose a cost of $100 million of more in any given year on any governmental entity or the private sector.

List of Subjects in 30 CFR Part 920

Intergovernmental relations, Surface mining, Underground mining.

Dated: May 1, 1998.

Ronald C. Recker,

Acting Regional Director, Appalachian Regional Coordinating Center.

For the reasons set out in the preamble, Title 30, Chapter VII, Subchapter T of the Code of Federal Regulations is amended as set forth below:

PART 920—MARYLAND

1. The authority citation for part 920 continues to read as follows:

Authority: 30 U.S.C. 1201 *et seq.*

2. Section 920.15 is amended in the table by adding a new entry in chronological order by ''Date of Final Publication'' to read as follows:

§ 920.15 Approval of Maryland regulatory program amendments.

* * * * *

Original amendment submissions date	Date of final publication	Citation/description
*	*	*
March 6, 1997	May 13, 1998	COMAR 26.20.14.01B, 26.20.14.03, 26.20.14.04, Actuarial Study.

§ 920.16 [Amended]

3. Section 920.16 is amended by removing and reserving paragraphs (h), (i), (j), and (n).

[FR Doc. 98–12646 Filed 5–12–98; 8:45 am]
BILLING CODE 4310–05–M

DEPARTMENT OF TRANSPORTATION

Coast Guard

33 CFR Part 100

[CGD07–98–013]

RIN 2115–AE46

Special Local Regulations; River Race Augusta, Augusta, GA

AGENCY: Coast Guard, DOT.

ACTION: Final Rule.

SUMMARY: The Coast Guard is establishing permanent special local regulations for the River Race Augusta, which will be held annually on the third Friday, Saturday and Sunday of May, between 7 a.m. and 5 p.m. Eastern Daylight Time (EDT) each day. Historically, there have been approximately sixty participants racing 16 to 18 foot outboard power boats on the Savannah River at Augusta, GA, between mile markers 199 and 197. These regulations are necessary to provide for the safety of life on navigable waters during the event, as the nature of the event and the closure of the Savannah River creates an extra or unusual hazard on the navigable waters.

DATES: These rules become effective May 13, 1998.

FOR FURTHER INFORMATION CONTACT: LTJG A.L. Cooper, Coast Guard Group Charleston at (803) 720–7748.

SUPPLEMENTARY INFORMATION:

Regulatory History

The Coast Guard published a Notice of Proposed Rulemaking (NPRM) in the **Federal Register** on March 24, 1998 (63 FR 14057). No comments were received during the comment period.

Background and Purpose

These regulations are intended to provide for the safety of life and to promote safe navigation on the waters off Augusta on the Savannah River during the River Race August, by controlling the traffic entering, exiting and traveling within these waters. The concentration of spectator and participant vessels associated with the River Race poses safety concerns, which are addressed in these special local regulations. These regulations prohibit the entry of non-participating vessels in the area downstream from the U.S. Highway 1 Bridge on the Savannah River between mile markers 199 and 197, annually from 7 a.m. to 5 p.m. each day, on the third Friday, Saturday and Sunday of May. These regulations permit the movement of spectator vessels and other non-participants after the termination of the race each day, and during intervals between scheduled events.

In accordance with 5 U.S.C. 553, good cause exists for making these regulations effective in less than 30 days after **Federal Register** publication. Delaying its effective date would be impracticable, as there was not sufficient time remaining from the receipt of the permit request to allow for a comment period and a full 30 day effective date period after publication. Delaying the effective date would also be contrary to the public interest because the event would be held with no regulations in force, creating a safety hazard.

Regulatory Evaluation

This rule is not a significant regulatory action under Section 3(f) of the Executive Order 12866 and does not require an assessment of potential costs and benefits under Section 6(a)(3) of that Order. It has been exempted from review by the Office of Management and Budget under that order. It is not significant under the regulatory policies and procedures of the Department of Transportation (DOT) (44 FR 11040; February 26, 1979). The Coast Guard expects the economic impact of this rule to be so minimal that a full Regulatory Evaluation under paragraph 10(e) of the regulatory policies and procedures of DOT is unnecessary. These regulations will be in effect three days each year for only 10 hours each day.

Small Entities

Under the Regulatory Flexibility Act (5 U.S.C. 601 et seq.), the Coast Guard must consider whether this rule will have a significant economic impact on a substantial number of small entities. ''Small entities'' include small business, not-for-profit organizations that are independently owned and operated and are not dominant in their field, and government jurisdictions with populations of less than 50,000.

Therefore, the Coast Guard certifies under 5 U.S.C. 606(b) that this rule would not have a significant economic impact on a substantial number of small entities as the regulations would only be in effect for ten hours in a limited area of the Savannah River for three days each year.

Collection of Information

This rule contains no collection of information requirements under the Paperwork Reduction Act (44 U.S.C. 3501 et seq.).

Federalism

This action has been analyzed in accordance with the principles and criteria contained in Executive Order 12612 and it has been determined that the rulemaking does not have sufficient Federalism implications to warrant the preparation of a Federalism Assessment.

Environmental Assessment

The Coast Guard has considered the environmental impact of this rule consistent with Section 2.B.2 of Commandant Instruction M16475.1C. In accordance with that section, this action has been environmentally assessed (EA completed) and the Coast Guard has concluded that it will not significantly affect that quality of the human environment. An Environmental Assessment and a Finding of No Significant Impact has been prepared and are available in the docket for inspection or copying.

List of Subjects in 33 CFR Part 100

Marine safety, Navigation (water), Reporting and recordkeeping requirements, Waterways.

Final Regulations

In consideration of the foregoing, the Coast Guard amends Part 100 of Title 33, Code of Federal Regulations as follows:

1. The authority citation for Part 100 continues to read as follows:

PART 100—[AMENDED]

Authority: 33 U.S.C. 1233; 49 CFR 1.46 and 33 CFR 100.35.

2. A new § 100.732 is added to read as follows:

§ 100.732 Annual River Race Augusta; Savannah River, Augusta GA.

(a) *Definitions:* (1) *Regulated Area.* The regulated area is formed by a line drawn directly across the Savannah River at the U.S. Highway 1 Bridge at mile marker 199 and directly across the Savannah River at mile marker 197. The regulated area would encompass the width of the Savannah River between these two lines.

(2) *Coast Guard Patrol Commander.* The Coast Guard Patrol Commander is a commissioned, warrant, or petty officer of the Coast Guard who has been designated by the Commander, Coast

Guard Group Charleston, South Carolina.

(b) *Special Local Regulations.* (1) Entry into the regulated area is prohibited to all non-participants.

(2) After termination of the River Race Augusta each day, and during intervals between scheduled events, at the discretion of the Coast Guard Patrol Commander, all vessels may resume normal operations.

(3) The Captain of the Port Charleston will issue a Marine Safety Information Broadcast Notice to Mariners to notify the maritime community of the special local regulations and the restrictions imposed.

(c) *Dates.* These regulations become effective annually from 7 a.m. to 5 p.m. EDT each day, on the third Friday, Saturday and Sunday of May, unless otherwise specified in the notice to mariners.

Dated: May 1, 1998.

N.T. Saunders,

Rear Admiral, U.S. Coast Guard Commander, Seventh Coast Guard District.

[FR Doc. 98–12846 Filed 5–11–98; 12:35 pm]

BILLING CODE 4910–15–M

DEPARTMENT OF VETERANS AFFAIRS

38 CFR Part 21

RIN 2900–AI85

Veterans' Training: Time Limit for Submitting Certifications under the Service Members Occupational Conversion and Training Act

AGENCY: Department of Veterans Affairs.

ACTION: Final rule.

SUMMARY: This document amends the training assistance and training benefit regulations of the Department of Veterans Affairs (VA). It places deadlines for submitting the certifications needed for both periodic payments and lump-sum deferred-incentive payments under the Service Members Occupational Conversion and Training Act (SMOCTA). Since the Act has a sunset provision, all work for which payments are due has been completed. This final rule allows VA to close the administration of SMOCTA.

DATES: Effective Date: July 13, 1998.

FOR FURTHER INFORMATION CONTACT: William G. Susling, Jr., Education Adviser, Education Service, Veterans Benefits Administration, 202–273–7187.

SUPPLEMENTARY INFORMATION: In a document published in the **Federal Register** on November 10, 1997 (62 FR 60464), VA proposed to amend the ''Administration of Educational Assistance Programs'' regulations that are set forth in 38 CFR 21.4001 *et seq.* VA proposed placing two-year deadlines for submitting the certifications required for both periodic payments and lump-sum deferred-incentive payments under the Service Members Occupational Conversion and Training Act (SMOCTA), 10 U.S.C. 1143 note.

Interested parties were given 60 days to submit comments. VA received no comments. Accordingly, based on the rationale set forth in the proposed rule document, we are adopting the provisions of the proposed rule as a final rule.

The Secretary of Veterans Affairs hereby certifies that this final rule will not have a significant economic impact on a substantial number of small entities as they are defined in the Regulatory Flexibility Act, 5 U.S.C. 601–612. The final rule will affect some small entities. However, the effect of the final rule, requiring employers to submit certifications within two years of the end of SMOCTA training, would not impose any additional costs on the employer. Pursuant to 5 U.S.C. 605(b), this final rule, therefore, is exempt from the initial and final regulatory flexibility analyses requirements of sections 603 and 604.

No Catalog of Federal Domestic Assistance number has been assigned to the program affected by this final rule.

List of Subjects in 38 CFR Part 21

Administrative practice and procedure, Armed forces, Civil rights, Claims, Colleges and universities, Conflict of interests, Defense Department, Education, Employment, Grant programs—education, Grant programs—veterans, Health care, Loan programs—education, Loan programs—veterans, Manpower training programs, Reporting and recordkeeping requirements, Educational institutions, Travel and transportation expenses, Veterans, Vocational education, Vocational rehabilitation.

Approved: May 5, 1998.

Togo D. West, Jr.,

Acting Secretary.

For the reasons set forth in the preamble, 38 CFR part 21 (subpart F–3) is amended as set forth below.

PART 21—VOCATIONAL REHABILITATION AND EDUCATION

Subpart F–3—Service Members Occupational Conversion and Training Program

1. The authority for part 21, subpart F–3 continues to read as follows:

Authority: 10 U.S.C. 1143 note; sec. 4481–4487, Pub. L. 102–484, 106 Stat. 2757–2769; sec. 610, Pub. L. 103–446, 108 Stat. 4673–4674, unless otherwise noted.

2. In § 21.4832, paragraphs (e)(3) and (e)(4) are added to read as follows:

§ 21.4832 Payments to employers.

* * * * * *

(e) * * *

(3) VA will not release any periodic payments for training provided by an employer if VA receives the employer's certification for that training after September 30, 1999.

(4) VA will not release any lump sum deferred incentive payment if VA receives either the veteran's or employer's certification required for that payment after January 31, 2000.

(Authority: 106 Stat. 2762, Pub. L. 102–484, sec. 4487(b); 10 U.S.C. 1143, note)

[FR Doc. 98–12633 Filed 5–12–98; 8:45 am]

BILLING CODE 8320–01–P

ENVIRONMENTAL PROTECTION AGENCY

40 CFR Part 52

[NH31–1–7160a; FRL–6010–7]

Approval and Promulgation of Air Quality Implementation Plans; Reasonably Available Control Technology for Nitrogen Oxides for the State of New Hampshire

AGENCY: Environmental Protection Agency (EPA).

ACTION: Direct final rule.

SUMMARY: EPA is approving a State Implementation Plan (SIP) revision submitted by the State of New Hampshire. This revision establishes and requires Reasonably Available Control Technology (RACT) at three stationary sources of nitrogen oxides (NO_X). The intended effect of this action is to approve source specific orders which require major stationary sources of NO_X to reduce their emissions in accordance with requirements of the Clean Air Act.

DATES: This rule is effective on July 13, 1998 without further notice unless the Agency receives relevant adverse comments by June 12, 1998. Should the

Agency receive such comments, it will publish a timely withdrawal of this direct final rule in the **Federal Register** and inform the public that the rule did not take effect.

ADDRESSES: Comments may be mailed to Susan Studlien, Deputy Director, Office of Ecosystem Protection (mail code CAA), U.S. Environmental Protection Agency, Region I, JFK Federal Building, Boston, MA 02203–2211. Copies of the documents relevant to this action are available for public inspection during normal business hours, by appointment, at the Office of Ecosystem Protection, U.S. Environmental Protection Agency, Region I, One Congress Street, 11th floor, Boston, MA; as well as the Air Resources Division, New Hampshire Department of Environmental Services, 64 North Main Street, Caller Box 2033, Concord, NH 03302–2033.

FOR FURTHER INFORMATION CONTACT: Steven A. Rapp, Environmental Engineer, Air Quality Planning Unit (CAQ), U.S. EPA, Region I, JFK Federal Building, Boston, MA 02203–2211; (617) 565–2773; Rapp.Steve@EPAMAIL.EPA.GOV.

SUPPLEMENTARY INFORMATION:

I. Background

The Clean Air Act (CAA) requires that States develop RACT regulations for all major stationary sources of NO_X in areas which have been classified as ''moderate,'' ''serious,'' ''severe,'' and ''extreme'' ozone nonattainment areas, and in all areas of the Ozone Transport Region (OTR). EPA has defined RACT as the lowest emission limitation that a particular source is capable of meeting by the application of control technology that is reasonably available considering technological and economic feasibility (44 FR 53762; September 17, 1979). This requirement is established by sections 182(b)(2), 182(f), and 184(b) of the CAA.

These CAA NO_X requirements are further described by EPA in a notice entitled, ''State Implementation Plans; Nitrogen Oxides Supplement to the General Preamble; Clean Air Act Amendments of 1990 Implementation of Title I; Proposed Rule,'' published November 25, 1992 (57 FR 55620). The November 25, 1992 notice, also known as the NO_X Supplement, should be referred to for more detailed information on NO_X requirements. Additional EPA guidance memoranda, such as those included in the ''NO_X Policy Document for the Clean Air Act of 1990,'' also known as the NO_X Policy Document, (EPA–452/R–96–005, March 1996), should also be referred to for more information on NO_X requirements. Similarly, the ''Economic Incentive Program Rules,'' or EIP (67 FR 16690, April 7, 1997), and the Emissions Trading Policy Statement, or ETPS (51 FR 43814, December 4, 1986), should be referred to for information on EPA's policy concerning emissions averaging and/or trading by sources subject to NO_X RACT.

New Hampshire has three designated ozone nonattainment areas. First, the area which includes all of Merrimack County, part of Hillsborough County, and part of Rockingham County is classified as a marginal nonattainment area (see 40 CFR Part 81 for the list of affected towns). Second, all of Strafford County and part of Rockingham County is classified as a serious non-attainment area (see 40 CFR Part 81, § 81.330 for the list of affected towns). Third, the part of southern New Hampshire that is located within the Boston-Lawrence-Salem Consolidated Metropolitan Statistical Area (CMSA) is also classified as a serious nonattainment area (see 40 CFR Part 81, § 81.330 for the list of affected towns). Additionally, section 184(a) of the CAA also establishes the northeastern United States, which includes all of the State of New Hampshire, as part of the OTR.

Section 182(b)(2) of the CAA requires States to require implementation of RACT with respect to all major sources of volatile organic compounds (VOCs). This RACT requirement also applies to all major sources in ozone nonattainment areas with higher than moderate nonattainment classifications. Section 182(f) states that, ''the plan provisions required under this subpart for major stationary sources of volatile organic compounds shall also apply to major stationary sources (as defined in section 302 and subsections (c), (d), and (e) of the section) of oxides of nitrogen.'' Additionally, section 184(b)(2) requires major stationary sources in the OTR to meet the requirements applicable to major sources if the area were classified as a moderate nonattainment area, unless already classified at a higher nonattainment level. These sections of the CAA, taken together, establish the requirements for New Hampshire to submit a NO_X RACT regulation which covers major sources.

Section 302 of the CAA generally defines ''major stationary source'' as a facility or source of air pollution which has the potential to emit 100 tons per year or more of air pollution. This definition applies unless another provision of the CAA explicitly defines major source differently. Therefore, for NO_X, a major source is one with the potential to emit 100 tons per year or more in marginal and moderate areas, as well as in attainment areas in the OTR. However, for serious nonattainment areas, a major source is defined by section 182(c) as a source that has the potential to emit 50 tons per year or more.

In New Hampshire's Strafford County, in the part of Rockingham County that is a classified as serious nonattainment, and in the Boston-Lawrence-Salem CMSA, a major stationary source of NO_X is a facility which has a potential to emit of 50 tons per year or more of NO_X. Throughout the rest of the State, a major stationary source of NOx is a facility with the potential to emit 100 tons or more per year of NOx. Such facilities are subject to NO_X RACT requirements.

II. State Submittal

On April 14, 1997, May 6, 1997, and September 24, 1997, the New Hampshire Department of Environmental Services (DES) submitted revisions to its SIP concerning Public Service Company of New Hampshire (PSNH), Hampshire Chemical Corporation (HCC), and Crown Vantage (Crown), respectively. The Crown and HCC SIP submittals define RACT for various pieces of equipment at their facilities which are subject to the miscellaneous RACT provisions of New Hampshire's NO_X RACT regulation ''Env-A 1211 Nitrogen Oxides'' (Env-A 1211). The submittal for Crown also defines alternative emission limits for two industrial boilers at the Berlin facility. The PSNH SIP submittal establishes an emissions averaging plan for the two utility boilers at PSNH's Merrimack Station (Merrimack). Additionally, the submittal for Merrimack involves an emission quantification protocol for the creation and/or use of discrete emission reductions.

Previously, DES submitted regulation Part Env-A 1211 and a source-specific NO_X RACT determination as a SIP revision in response to the CAA requirements that RACT be required for all major sources of NO_X. On April 9, 1997, EPA published a **Federal Register** notice approving those NO_X RACT submittals. See 62 FR 17137. That notice, however, stated that RACT determinations were still outstanding for Crown and HCC. Subsequently, DES submitted NO_X RACT determinations to EPA for Crown and HCC on September 24, 1997 and May 6, 1997, respectively. Additionally, on April 14, 1997 DES submitted an emissions averaging plan and emission credit quantification protocol for PSNH as an alternative RACT determination and economic incentive program revision to the SIP.

III. Description of Submittal

The following is a description of the three SIP actions. For a more detailed description of these RACT related actions, the reader should refer to the technical support document and attachment and/or to the RACT orders themselves, located at the addresses listed above. The orders have been evaluated against the relevant EPA guidance documents, including the NO_X Supplement, the NO_X Policy Document, the EIP, and the ETPS.

A. Crown Vantage

There are a number of devices at Crown's Berlin facility which fall under the miscellaneous NO_X RACT requirements of Env-A 1211.02(l), i.e., the Chemical Recovery Unit #11, the #2 lime kiln, and four space heaters. The space heaters each have heat input capacities of less than 2 million Btu per hour (mmBtu/hr). Because these units operate only during the heating season and have relatively small NO_X emissions, it has been determined that emission controls for this unit size would not be cost effective. Therefore, RACT for these units has been defined as no additional controls. For the Chemical Recovery Unit #11, RACT has been defined as a NO_X limitation of 120 parts per million on a wet volume basis (ppmv), corrected to 8% oxygen, on a 24 hour calendar day basis. For the #2 lime kiln, RACT has been defined as an emission limitation of 120 ppmv, corrected to 10% oxygen, on a 24 hour calendar day basis. These limits are comparable to RACT limits established for similar types of equipment in other States in the northeastern United States.

Additionally, there are a number of devices at the Crown facility for which it has been demonstrated that meeting the emission limits of Env-A 1211 is not economically or technically feasible. Subsequently, alternative emission limitations have been determined pursuant to Env-A 1211.17 for these units, i.e., Boiler #3 and Boiler #12. Crown has demonstrated that for Boiler #3, low NO_X burners (LNB) would reduce NO_X at a cost-effectiveness of almost $4700 per ton of NO_X reduced. Similarly, they have shown that for Boiler #12, the cost-effectiveness would be approximately $8800 per ton of NO_X reduced. The costs required to achieve these reductions are considerably higher than the high end of the cost-effectiveness range recommended by EPA (see ''NO_X Policy Document for the Clean Air Act of 1990,'' (EPA–452/R–96–005, March 1996)). Therefore, for Boiler #3, Final RACT Order ARD–97–003 sets a NO_X emission limit of 0.45 pounds/million Btu (lb/mmBtu) on an annual basis and 0.60 lb/mmBtu on a 24 hour basis. For Boiler #12, Final RACT Order ARD–97–0903 sets a NO_X emission limitation of 0.45 lb/mmBtu. These limits are acceptable as alternative RACT emission limits. In addition, the facility must meet the record keeping and reporting requirements of Env-A 901.06 and Env-A 901.07.

On June 10, 1997, DES proposed RACT Order ARD–97–003. On July 23, 1997, DES held a public hearing. On June 26, 1997, EPA submitted written comments to the public record. On September 24, 1997, DES submitted Final RACT Order ARD–97–003, including the miscellaneous and alternative RACT determinations, to EPA as a revision to the New Hampshire SIP. On October 16, 1997, EPA deemed the package administratively and technically complete.

B. Hampshire Chemical Corporation

There are a number of devices at HCC's Nashua facility which fall under the miscellaneous NO_X RACT requirements of Env-A 1211.02(l), i.e., a hot oil heater and six kilns. All of the kilns are small units, having heat input capacities of less than 5 mmBtu/hr. Therefore, RACT for these units has been defined as no additional NO_X controls. The hot oil heater has a heat input capacity of 13.3 mmBtu/hr. Although technically the unit is not a boiler, it has similar mechanical and thermal characteristics. Therefore, RACT for the oil heater has been defined as an annual tune-up, which is also required of industrial boilers of the same size under Env-A 1211.05. In addition, the facility must meet the record keeping and reporting requirements of Env-A 901.06 and Env-A 901.07.

New Hampshire formally proposed RACT Order ARD–95–011 on December 4, 1995 and held a public hearing on January 9, 1996. EPA submitted written comments on that proposal on January 16, 1996. New Hampshire submitted Final RACT Order ARD–95–011 on May 6, 1997. EPA deemed the submittal administratively and technically complete on May 28, 1997.

C. Public Service of New Hampshire's Merrimack Station

During 1995 and 1996, EPA received and commented on several draft RACT orders concerning PSNH's Merrimack facility. These draft orders proposed to allow PSNH to meet the NO_X emission limitations of Env-A 1211.03(c)(1)(b) at units 1 (MK1) and 2 (MK2) through the use of emissions averaging, or bubbling, as provided for in Env-A 1211.13. In an effort to comply with the emission limitations of Env-A 1211.03(c)(1)(b), PSNH had installed NO_X control systems on both units in 1995. The selective non-catalytic reduction (SNCR) controls on MK1, however, did not reduce emissions as well as expected and the unit was unable to meet the emission rate limitation set by Env-A 1211. Fortunately, the selective catalytic reduction (SCR) NO_X control system on MK2 performed better than expected. This reduction allowed MK2 to run at emission rates lower than its limits in Env-A 1211. The enhanced performance of MK2 makes emissions averaging or trading a viable means of achieving the NO_X reductions anticipated by RACT regulations.

Basically, the bubble for Merrimack requires MK1 and MK2 to meet daily emissions caps as well as emission rate limitations. The first cap applies to the emissions of the two units combined. The second cap applies only to the emissions of MK1 when MK2 is not at full capacity. The order also adds a weekly emission rate limitation on MK1. MK2 remains subject to a daily emission cap and emission rate limitation under Env-A 1211.

More specifically, MK1 and MK2 are required to meet a combined daily emission cap which achieves an equivalent level of NO_X reduction that would be achieved if both units met the applicable emission limitations in Env-A 1211.03(c)(1)(b), (d), and (f). This combined emissions cap is in addition to the emissions cap on MK2 imposed by Env-A 1211.03 (d) and (f). The order also imposes a separate emissions cap on MK1 when MK2 is not operating during all 24 hours of a day. This second cap is equal to a historical actual emission rate (i.e., the sixth highest average weekly value from January to October 1996) of MK1 multiplied by its throughput capacity. As described in the ETPS, because the use of emissions averaging should not result in an increase in total emissions, the second cap is needed to ensure that MK1 will not exceed its historical level of emissions during days when MK2 is not at full capacity. Similarly, the order adds a weekly emission rate limitation (i.e., the sixth highest value from January to October 1996) to ensure that the emission rate from MK1 does not exceed historical rates of emissions experienced during the operation of the NO_X control system on MK1.

Additionally, the PSNH SIP submittal includes an emission quantification protocol for the creation or use of discrete emission reductions (DERs) of NO_X at Merrimack. Basically, the

protocol describes a method for quantifying the difference between the daily unit-specific RACT emission limitations (baseline), as established in Env-A 1211.03, and the actual daily average emission rate that each unit achieves for the hours that the unit operated. The protocol requires that actual emissions be measured by a continuous emission monitoring systems (CEMS). For MK1, the more stringent emission rate limitation of Env-A 1211.03(c)(1)(b) is used as the baseline to yield the fewest number of credits and the greatest number of debits. For MK2, which is subject to both an emission rate limitation under Env-A 1211.03(c)(1)(b) and an emissions cap under Env-A 1211.03(d), the protocol requires that the calculation be done using each of the two RACT limits and that the lesser quantity of DERs calculated be considered creditable.

The SIP submittal also includes data documenting that the protocol was used to quantify the creation of 142.5 DERs at Merrimack from June 1, 1995 to September 30, 1995. The documentation shows that the quantity is above and beyond any DERs that were used for RACT compliance at either MK1 or MK2 during that time period. The protocol is intended as a methodology to calculate the generation or use of DERs for RACT compliance, either by PSNH or by others who would purchase the DERs from PSNH. The order requires that prior to the use of the PSNH DERs by others, however, a DER use protocol (if different from the method described in the attachment to the order) be approved by DES and EPA, either on a case-by-case basis or by approval of New Hampshire's emissions trading regulations Env-A 3000 and 3100. EPA has not yet acted on those regulations and will do so in a future notice.

The order also discusses the use of the DERs as early reduction allowances as part of the Ozone Transport Commission's NO_X budget and allowance trading program. New Hampshire has not yet adopted this regulation. Therefore, EPA cannot judge the compatibility of these provisions with the allowance trading program at this time. The order does, however, discuss the potential for double-counting the emission reductions under both programs. The order commits DES to taking steps in the future to avoid such double-counting.

New Hampshire proposed RACT Order ARD–97–001 for Merrimack on January 28, 1997. EPA provided written comments to DES concerning that proposal on March 11, 1997. On April 14, 1997, DES submitted Final RACT Order ARD–97–001 as a revision to the SIP. On May 28, 1997, EPA sent a letter to DES deeming the submittal administratively and technically complete.

IV. Issues

The final RACT order for PSNH includes a protocol for the creation and/or use of credits for compliance at Merrimack. This protocol would allow the use of one-time or carry over credits during time periods other than when they were generated (i.e., the intertemporal use of credits). The credits produced at Merrimack, however, are the result of the operation of extra control capacity on MK2. This means that at any given time, extra reductions are balancing the use of earlier credits. In this way, the generation or use of credits from Merrimack should produce no increase in NO_X emissions, or ''spiking,'' due to the use of credits for compliance with RACT limits. Therefore, the use of these credits is consistent with the requirements of the New Hampshire SIP, RFP and ROP plans, and area-wide RACT requirements.

V. Final Action

EPA review of the NO_X RACT SIP submittals, including the miscellaneous NO_X RACT submittals for HCC and Crown, indicates that New Hampshire has sufficiently defined the NO_X RACT requirements for these sources. Additionally, EPA review of the emissions averaging plan and emissions quantification protocol for PSNH's Merrimack facility indicates that these economic incentive programs meet applicable EPA guidance. Therefore, EPA is approving these submittals into the New Hampshire SIP as meeting the requirements of the CAA.

EPA is publishing this action without prior proposal because the Agency views this as a noncontroversial amendment and anticipates no adverse comments. However, in the proposed rules section of this **Federal Register** publication, EPA is publishing a separate document that will serve as the proposal should relevant adverse comments be filed. This rule will become effective on July 13, 1998 without further notice unless the Agency receives relevant adverse comment by June 12, 1998.

Should the Agency receive such comments, it will publish a timely document in the **Federal Register** withdrawing the final rule and informing the public that this rule did not take effect. All public comments received will then be addressed in a subsequent final rule based on this action serving as a proposed rule. EPA will not institute a second comment period on this action. Any parties interested in commenting on this action should do so at this time. If no such comments are received, the public is advised that this rule will be effective on July 13, 1998 and no further action will be taken on the proposed rule.

Nothing in this action should be construed as permitting or allowing or establishing a precedent for any future request for revision to any State Implementation Plan. Each request for revision to the State Implementation Plan shall be considered separately in light of specific technical, economic, and environmental factors and in relation to relevant statutory and regulatory requirements.

VI. Administrative Requirements

A. Executive Order 12866

The Office of Management and Budget (OMB) has exempted this regulatory action from E.O. 12866 review.

B. Regulatory Flexibility Act

Under the Regulatory Flexibility Act, 5 U.S.C. 600 *et. seq.*, EPA must prepare a regulatory flexibility analysis assessing the impact of any proposed or final rule on small entities. 5 U.S.C. 603 and 604. Alternatively, EPA may certify that the rule will not have a significant impact on a substantial number of small entities. Small entities include small businesses, small not-for-profit enterprises, and government entities with jurisdiction over populations of less than 50,000.

SIP approvals under section 110 and subchapter I, part D of the Clean Air Act do not create any new requirements but simply approve requirements that the State is already imposing. Therefore, because the Federal SIP approval does not impose any new requirements, the Administrator certifies that it does not have a significant impact on any small entities affected. Moreover, due to the nature of the Federal-State relationship under the CAA, preparation of a flexibility analysis would constitute Federal inquiry into the economic reasonableness of state action. The Clean Air Act forbids EPA to base its actions concerning SIPs on such grounds. *Union Electric Co.* v. *U.S. EPA*, 427 U.S. 246, 255–66 (1976); 42 U.S.C. 7410(a)(2).

C. Unfunded Mandates

To reduce the burden of Federal regulations on States and small governments, President Clinton issued Executive Order 12875 on October 26, 1993, entitled ''Enhancing the Intergovernmental Partnership.'' Under

Executive Order 12875, EPA may not issue a regulation which is not required by statute unless the Federal Government provides the necessary funds to pay the direct costs incurred by the State and small governments or EPA provides OMB with a description of the prior consultation and communications the Agency has had with representatives of State and small governments and a statement supporting the need to issue the regulation. In addition, Executive Order 12875 requires EPA to develop an effective process permitting elected and other representatives of State and small governments ''to provide meaningful and timely input in the development of regulatory proposals containing significant unfunded mandates.''

The present action satisfies the requirements of Executive Order 12875 because it is required by statute and because it does not contain a significant unfunded mandate. Section 110(k) of the Clean Air Act requires that EPA act on implementation plans submitted by States. This rulemaking implements that statutory command. In addition, this rule approves preexisting state requirements and does not impose new Federal mandates that bind State or small governments.

Under Sections 202 of the Unfunded Mandates Reform Act of 1995 (''Unfunded Mandates Act''), signed into law on March 22, 1995, EPA must prepare a budgetary impact statement to accompany any proposed or final rule that includes a Federal mandate which may result in estimated costs to State, local, or tribal governments in the aggregate, or to the private sector, of $100 million or more. Under Section 205, EPA must select the most cost-effective and least burdensome alternative that achieves the objectives of the rule and is consistent with statutory requirements. Section 203 requires EPA to establish a plan for informing and advising any small governments that may be significantly or uniquely impacted by the rule.

EPA has determined that the approval action promulgated does not include a Federal mandate that may result in estimated costs of $100 million or more to either State, local, or tribal governments in the aggregate, or to the private sector. This Federal action approves pre-existing requirements under State or local law and imposes no new Federal requirements. Accordingly, no additional costs to State, local, or tribal governments, or to the private sector, result from this action.

D. Submission to Congress and the Comptroller General

The Congressional Review Act, 5 U.S.C. 801 *et seq.*, as added by the Small Business Regulatory Enforcement Fairness Act of 1996, generally provides that before a rule may take effect, the agency promulgating the rule must submit a rule report, which includes a copy of the rule, to each House of the Congress and to the Comptroller General of the United States. Section 804, however, exempts from section 801 the following types of rules: rules of particular applicability; rules relating to agency management or personnel; and rules of agency organization, procedure, or practice that do not substantially affect the rights or obligations of non-agency parties. 5 U.S.C. 804(3).

EPA is not required to submit a rule report regarding today's action under section 801 because this is a rule of particular applicability. This rule only affects three specifically-named entities, PSNH's Merrimack facility in Bow, New Hampshire, HCC in Nashua, New Hampshire, and Crown in Berlin, New Hampshire.

E. Petitions for Judicial Review

Under section 307(b)(1) of the Clean Air Act, petitions for judicial review of this action must be filed in the United States Court of Appeals for the appropriate circuit by July 13, 1998. Filing a petition for reconsideration by the Administrator of this final rule does not affect the finality of this rule for the purposes of judicial review nor does it extend the time within which a petition for judicial review may be filed, and shall not postpone the effectiveness of such rule or action. This action may not be challenged later in proceedings to enforce its requirements. (See section 307(b)(2).) EPA encourages interested parties to comment in response to the proposed rule rather than petition for judicial review, unless the objection arises after the comment period allowed for in the proposal.

List of Subjects in 40 CFR Part 52

Environmental protection, Air pollution control, Incorporation by reference, Intergovernmental relations, Nitrogen dioxide, Ozone, Reporting and recordkeeping requirements.

Note: Incorporation by reference of the State Implementation Plan for the State of New Hampshire was approved by the Director of the Federal Register on July 1, 1982.

Dated: April 21, 1998.

John P. DeVillars,

Regional Administrator, Region I.

Part 52 of chapter I, title 40 of the Code of Federal Regulations is amended as follows:

PART 52—[AMENDED]

1. The authority citation for part 52 continues to read as follows:

Authority: 42 U.S.C. 7401 *et seq.*

Subpart EE—New Hampshire

2. Section 52.1520 is amended by adding paragraph (c)(54) to read as follows:

§ 52.1520 Identification of plan.

* * * * *

(c) * * *

(54) Revisions to the State Implementation Plan submitted by the New Hampshire Air Resources Division on April 14, 1997, May 6, 1997, and September 24, 1997.

(i) Incorporation by reference.

(A) Letters from the New Hampshire Air Resources Division dated April 14, 1997, May 6, 1997, and September 24, 1997 submitting revisions to the New Hampshire State Implementation Plan.

(B) New Hampshire NO_X RACT Order ARD–97–001, concerning Public Service Company of New Hampshire in Bow, effective on April 14, 1997.

(C) New Hampshire NO_X RACT Order ARD–95–011, concerning Hampshire Chemical Corporation, effective on May 6, 1997.

(D) New Hampshire NO_X RACT Order ARD–97–003, concerning Crown Vantage, effective September 24, 1997.

3. In § 52.1525 Table 52.1525 is amended by adding new state citations for ''Final RACT Order ARD–97–001,'' ''Final RACT Order ARD–95–011,'' and ''Final RACT Order ARD–97–003,'' to read as follows:

§ 52.1525 EPA—approved New Hampshire state regulations

* * * * *

TABLE 52.1525.—EPA—APPROVED RULES AND REGULATIONS—NEW HAMPSHIRE

Title/subject	State citation chapter	Date adopted by State	Date approved by EPA	Federal Register citation	52.1520	Comments
*	*	*	*	*	*	*
Source specific order.	Order ARD–97–001.	04/14/97	5/13/98	[Insert *FR* citation from published date].	(c)(54)	Source specific NO_X RACT order for Public Service of New Hampshire in Bow, NH.
Source specific order.	Order ARD–95–011.	05/06/97	5/13/98	[Insert *FR* citation from published date].	(c)(54)	Source specific NO_X RACT order for Hampshire Chemical Corporation in Nashua, NH.
Source specific order.	Order ARD–97–003.	9/24/97	5/13/98	[Insert *FR* citation from published date].	(c)(54)	Source specific NO_X RACT order for Crown Vantage in Berlin, NH.
*	*	*	*	*	*	*

[FR Doc. 98–12716 Filed 5–12–98; 8:45 am]
BILLING CODE 6560–50–P

ENVIRONMENTAL PROTECTION AGENCY

40 CFR Part 52

[OR 66–7281a; FRL–6006–8]

Approval and Promulgation of Implementation Plans: Oregon

AGENCY: Environmental Protection Agency.

ACTION: Direct final rule.

SUMMARY: Environmental Protection Agency (EPA) approves Oregon Department of Environmental Quality's (ODEQ) new sections to Division 30 as submitted on June 1, 1995, and revisions to Divisions 20, 21, 22, 25, and 30, as submitted on January 22, 1997, for inclusion into their State Implementation Plan (SIP).

DATES: This rule is effective without further notice on July 13, 1998, unless the Agency receives relevant adverse comment by June 12, 1998. Should the Agency receive such comments, it will publish a timely withdrawal informing the public that this rule will not take effect.

ADDRESSES: Written comments should be addressed to: Montel Livingston, SIP Manager, Office of Air Quality (OAQ–107), EPA, 1200 Sixth Avenue, Seattle, Washington 98101. Documents which are incorporated by reference are available for public inspection at the Air and Radiation Docket and Information Center, Environmental Protection Agency, 401 M Street, SW, Washington, D.C. 20460. Copies of material submitted to EPA may be examined during normal business hours at the following locations: EPA, Region 10, Office of Air Quality, 1200 Sixth Avenue (OAQ–107), Seattle, Washington 98101, and ODEQ, 811 S.W. Sixth Avenue, Portland, OR 97204.

FOR FURTHER INFORMATION CONTACT: Catherine Woo, Office of Air Quality (OAQ–107), EPA, Seattle, Washington 98101, (206) 553–1814.

SUPPLEMENTARY INFORMATION:

I. Background

On June 1, 1995, the ODEQ submitted two new sections under Division 30 of the SIP. These included: OAR–340–030–0320, Requirement for Operation and Maintenance Plans, and OAR–340–030–0330, Source Testing, which were originally adopted on April 14, 1995 and state effective on May 1, 1995. However, they were subsequently revised and adopted by ODEQ on October 11, 1996, and submited to EPA for inclusion into the SIP on January 22, 1997. The contents of both the new sections for Division 30 and their subsequent revisions have been reviewed, with no adverse concerns regarding their content or changes. OAR–340–030–0320 and –0330 are approved as well as their subsequent revisions.

On January 22, 1997, the ODEQ submitted revisions to the SIP, which included: OAR–340–020–0047, State of Oregon Clean Air Act Implementation Plan; OAR–340–022–0170, Surface Coating in Manufacturing; OAR–340–022–0840, Innovative Products; OAR–340–022–0930, Requirements for Manufacture, Sale and Use of Spray Paint; OART–340–022–0055, Fuel Burning Equipment; OAR–340–028–0110, Definitions; OAR–340–028–0400, Information Exempt From Disclosure; OAR–340–028–0630, Typically Achievable Control Technology; OAR–340–028–1010, Requirement for Plant Site Emission Limits; OAR–340–028–1720, Permit Required; OAR–340–030–0015, Wood Waste Boilers; OAR–340–030–0044, Requirement for Operation and Maintenance Plans (Medford-Ashland AQMA Only); OAR–340–030–0050, Continuous Monitoring; and OAR–340–030–0055, Source Testing. All of these revisions, with the exception of OAR–340–022–0170, –028–0630, –021–0025 and –021–0027, are editorial and housekeeping in nature and are approved. OAR–340–022–0170 reflects a correction to delete a reference to ''metal'' parts of section (4) and a revision to say ''Miscellaneous Metal Parts and Products'' as the rule's title in in 5(j). OAR–340–028–0630 reflects a revision that would exempt sources from the Typically Achievable Control Technology only when specific design or performance standards in Division 30 apply. This corrects a previous state rule which exempts sources covered by any emission standard in Division 30. OAR–340–021–0025 and –0027 have been superseded by more specific incinerator rules in Division 25; therefore, they are repealed from the SIP. The revisions to all the above rules are approved.

II. Summary of Action

EPA is approving ODEQ's new sections to Division 30, as submitted on June 1, 1995, and revisions to Divisions 20, 21, 22, 25, and 30, as submitted on January 22, 1997. OAR–340–021–0025 and –0027 are repealed from the SIP.

Nothing in this action should be construed as permitting or allowing or establishing a precedent for any future request for revision to any state implementation plan. Each request for revision to the state implementation plan shall be considered separately in light of specific technical, economic, and environmental factors, and in relation to relevant statutory and regulatory requirements.

EPA is publishing this rule without prior proposal because the Agency views this as a noncontroversial

amendment and anticipates no adverse comments. However, in the proposed rules section of this **Federal Register** publication, EPA is publishing a separate document that will serve as the proposal to approve the SIP revision should relevant adverse comments be filed. This rule will be effective July 13, 1998, without further notice unless the Agency receives relevant adverse comments by June 12, 1998.

If the EPA receives such comments, then EPA will publish a timely withdrawal of the direct final rule and informing the public that the rule did not take effect. All public comments received will then be addressed in a subsequent final rule based on the proposed rule. The EPA will not institute a second comment period on the proposed rule. Only parties interested in commenting on the proposed rule should do so at this time. If no such comments are received, the public is advised that this rule will be effective on July 13, 1998, and no further action will be taken on the proposed rule.

III. Administrative Requirements

A. Executive Order 12866

The Office of Management and Budget (OMB) has exempted this regulatory action from E.O. 12866 review.

B. Regulatory Flexibility Act

Under the Regulatory Flexibility Act, 5 U.S.C. 600 *et seq.*, EPA must prepare a regulatory flexibility analysis assessing the impact of any proposed or final rule on small entities. 5 U.S.C. 603 and 604. Alternatively, EPA may certify that the rule will not have a significant impact on a substantial number of small entities. Small entities include small businesses, small not-for-profit enterprises, and government entities with jurisdiction over populations of less than 50,000.

SIP approvals under section 110 and subchapter I, Part D, of the CAA do not create any new requirements, but simply approve requirements that the State is already imposing. Therefore, because the Federal SIP-approval does not impose any new requirements, I certify that it does not have a significant impact on any small entities affected. Moreover, due to the nature of the Federal-State relationship under the CAA, preparation of a regulatory flexibility analysis would constitute federal inquiry into the economic reasonableness of State action. The CAA forbids EPA to base its actions concerning SIPs on such grounds. *Union Electric Co.* v. *E.P.A.*, 427 U.S. 246, 256–66 (S.Ct. 1976); 42 U.S.C. 7410(a)(2).

C. Unfunded Mandates

Under Section 202 of the Unfunded Mandates Reform Act of 1995 (''Unfunded Mandates Act''), signed into law on March 22, 1995, EPA must prepare a budgetary impact statement to accompany any proposed or final rule that includes a Federal mandate that may result in estimated costs to State, local, or tribal governments in the aggregate, or to the private sector, of $100 million or more. Under Section 205, EPA must select the most cost-effective and least burdensome alternative that achieves the objectives of the rule and is consistent with statutory requirements. Section 203 requires EPA to establish a plan for informing and advising any small governments that may be significantly or uniquely impacted by the rule.

EPA has determined that the approval action promulgated does not include a Federal mandate that may result in estimated costs of $100 million or more to either State, local, or tribal governments in the aggregate, or to the private sector. This Federal action approves pre-existing requirements under State or local law, and imposes no new requirements. Accordingly, no additional costs to State, local, or tribal governments, or to the private sector, result from this action.

D. Submission to Congress and the Comptroller General

The Congressional Review Act, 5 U.S.C. 801 *et seq.*, as added by the Small Business Regulatory Enforcement Fairness Act of 1996, generally provides that before a rule may take effect, the agency promulgating the rule must submit a rule report, which includes a copy of the rule, to each House of the Congress and to the Comptroller General of the United States. EPA will submit a report containing this rule and other required information to the U.S. Senate, the U.S. House of Representatives, and the Comptroller General of the United States prior to publication of the rule in the **Federal Register**. This rule is not a major rule as defined by 5 U.S.C. 804(2).

E. Petitions for Judicial Review

Under section 307(b)(1) of the Clean Air Act, petitions for judicial review of this action must be filed in the United States Court of Appeals for the appropriate circuit by July 13, 1998. Filing a petition for reconsideration by the Administrator of this final rule does not affect the finality of this rule for the purposes of judicial review, nor does it extend the time within which a petition for judicial review may be filed, and shall not postpone the effectiveness of such rule or action. This action may not be challenged later in proceedings to enforce its requirements. (See section 307(b)(2), 42 U.S.C. 7607(b)(2)).

List of Subjects in 40 CFR Part 52

Environmental protection, Air pollution control, Carbon monoxide, Hydrocarbons, Incorporation by reference, Intergovernmental relations, Lead, Ozone, Particulate matter, Reporting and recordkeeping requirements, Sulfur oxides, Volatile organic compounds.

Note: Incorporation by reference of the Implementation Plan for the State of Oregon was approved by the Director of the Office of Federal Register on July 1, 1982.

Dated: April 20, 1998.

Chuck Clark,

Regional Administrator, Region X.

Part 52, chapter I, title 40 of the Code of Federal Regulations is amended as follows:

PART 52—[AMENDED]

1. The authority citation for part 52 continues to read as follows:

Authority: 42 U.S.C. 7401 et seq.

Subpart MM—Oregon

2. Section 52.1970 is amended by adding paragraph (c) (125) to read as follows:

§ 52.1970 Identification of plan.

* * * * *

(c) * * *

(125) On June 1, 1995 and January 22, 1997, the Director of ODEQ submitted to the Reginal Administrator of EPA new sections to Division 30 and revisions to Divisions 20, 21, 22, 25, and 30.

(i) Incorporation by reference.

(A) OAR–340–020–0047; OAR–340–022–0170; OAR–340–022–0840; OAR–340–022–0930; OAR–340–022–0055; OAR–340–028–0110; OAR–340–028–0400; OAR–340–028–0630; OAR–340–028–1010; OAR–340–028–1720; OAR–340–030–0015; OAR–340–030–0044; OAR–340–030–0050; OAR–340–030–0055; OAR–340–030–0320; OAR–340–030–0330: These rules were all state adopted on October 11, 1996.

[FR Doc. 98–12434 Filed 5–12–98; 8:45 am]

BILLING CODE 6560–50–U

ENVIRONMENTAL PROTECTION AGENCY

40 CFR Part 52

[MD067–3025a; FRL–6012–5]

Approval and Promulgation of Air Quality Implementation Plans; Maryland; Definition of the Term ''Major Stationary Source of VOC''

AGENCY: Environmental Protection Agency (EPA).

ACTION: Direct final rule.

SUMMARY: EPA is approving a State Implementation Plan (SIP) revision submitted by the State of Maryland. This revision pertains to amendments to Maryland's definition of the term major stationary source of volatile organic compounds (VOC). This action is being taken in accordance with the SIP submittal and revision provisions of the Act.

DATES: This final rule is effective July 13, 1998 unless on or before June 12, 1998, adverse or critical comments are received. If adverse comments are received EPA will publish a timely withdrawal in the **Federal Register** and inform the public that the rule did not take effect.

ADDRESSES: Comments may be mailed to David L. Arnold, Chief, Ozone and Mobile Sources Section, Mailcode 3AP21, U.S. Environmental Protection Agency, Region III, 841 Chestnut Building, Philadelphia, Pennsylvania 19107. Copies of the documents relevant to this action are available for public inspection during normal business hours at the Air Protection Division, U.S. Environmental Protection Agency, Region III, 841 Chestnut Building, Philadelphia, Pennsylvania 19107 and the Maryland Department of the Environment, 2500 Broening Highway, Baltimore, Maryland, 21224.

FOR FURTHER INFORMATION CONTACT: Maria A. Pino, (215) 566–2181, at the EPA Region III address above, or via e-mail at pino.maria@epamail.epa.gov. While information may be requested via e-mail, any comments must be submitted in writing to the EPA Region III address above.

SUPPLEMENTARY INFORMATION:

Description of the State's Submittal

On July 12, 1995, the Maryland Department of the Environment submitted amendments to its air quality regulations to EPA as a SIP revision. The July 12, 1995 submittal contains amendments to the definition of the term ''major stationary source of VOC'' and Maryland's major source VOC reasonably available control technology (RACT) regulation, COMAR 26.11.19.01B(4) and 26.11.19.02G, respectively. Maryland revised its definition by lowering the major source size ''threshold'' in the Maryland portion of the Washington, DC ozone nonattainment area, Calvert, Charles, Frederick, Montgomery, and Prince George's Counties, and by requiring RACT on these newly defined major sources. This action pertains only to Maryland's revisions to COMAR 26.11.19.01B(4), the definition of the term ''major stationary source of VOC.'' Revisions to Maryland's major source VOC RACT regulation are the subject of a separate rulemaking action.

Maryland's July 1995 submittal lowers the major source size ''threshold'' in the Maryland portion of the Washington, DC ozone nonattainment area from 50 to 25 tons per year (TPY) of VOC as is already required in the Baltimore ozone nonattainment area. The term ''major stationary source of VOC,'' COMAR 26.11.19.01B(4), has been amended, therefore, to mean any stationary source with the potential to emit: (a) 25 TPY of VOC or more in the City of Baltimore and Anne Arundel, Baltimore, Calvert, Carroll, Cecil, Charles, Frederick, Harford, Howard, Montogomery, and Prince George's Counties, and (b) 50 TPY in the remainder of the State.

As required by 40 CFR 51.102, the State of Maryland has certified that public hearings with regard to these proposed revisions were held in Maryland on December 15, 1994 in Baltimore, Maryland.

EPA's Evaluation

Maryland's July 12, 1995 SIP revision submittal contains revisions to lower the major source size ''threshold'' for the Maryland portion of the Washington, DC serious ozone nonattainment area, Calvert, Charles, Frederick, Montgomery, and Prince George's Counties, and required RACT on these newly defined major sources. These revisions are needed as part of Maryland's plan to meet the Clean Air Act's rate-of-progress (ROP) requirements in the Maryland portion of the Washington, DC ozone nonattainment area. Under the Clean Air Act's ROP provisions, in section 182, any ozone nonattainment area classified as serious or worse is required to reduce emissions of VOCs by three percent per year from 1990 until the area's attainment date for the 1-hour National Ambient Air Quality Standard (NAAQS) for ozone. One of the control measures Maryland is using to reduce VOC emissions in the Washington, DC nonattainment area is RACT on VOC sources with the potential to emit between 25 and 50 TPY.

This revision strengthens the Maryland SIP and will result in VOC emission reductions. EPA is, therefore, approving this revision to the Maryland SIP.

EPA is approving this rule without prior proposal because the Agency views this as a noncontroversial amendment and anticipates no adverse comments. However, in the proposed rules section of this **Federal Register** publication, EPA is publishing a separate document that will serve as the proposal to approve the SIP revision should adverse or critical comments be filed. This rule will be effective July 13, 1998 without further notice unless the Agency receives relevant adverse comments by June 12, 1998.

If EPA receives such comments, then EPA will publish a timely withdrawal of the final rule and inform the public that the rule did not take effect. All public comments received will then be addressed in a subsequent final rule based on the proposed rule. EPA will not institute a second comment period on the proposed rule. Only parties interested in commenting on this action should do so at this time. If no such comments are received, the public is advised that this rule will be effective on July 13, 1998 and no further action will be taken on the proposed rule.

Final Action

EPA is approving Maryland's July 12, 1995 revisions to the definition of the term ''major stationary source of VOC,'' COMAR 26.11.19.01B(4), and incorporating those revisions into the Maryland SIP.

Nothing in this action should be construed as permitting or allowing or establishing a precedent for any future request for revision to any state implementation plan. Each request for revision to the state implementation plan shall be considered separately in light of specific technical, economic, and environmental factors and in relation to relevant statutory and regulatory requirements.

Administrative Requirements

A. Executive Order 12866

The Office of Management and Budget (OMB) has exempted this regulatory action from E.O. 12866 review.

B. Regulatory Flexibility Act

Under the Regulatory Flexibility Act, 5 U.S.C. 600 *et seq.*, EPA must prepare a regulatory flexibility analysis assessing the impact of any proposed or

final rule on small entities. 5 U.S.C. 603 and 604. Alternatively, EPA may certify that the rule will not have a significant impact on a substantial number of small entities. Small entities include small businesses, small not-for-profit enterprises, and government entities with jurisdiction over populations of less than 50,000.

SIP approvals under section 110 and subchapter I, part D of the Clean Air Act do not create any new requirements but simply approve requirements that the State is already imposing. Therefore, because the Federal SIP approval does not impose any new requirements, the Administrator certifies that it does not have a significant impact on any small entities affected. Moreover, due to the nature of the Federal-State relationship under the CAA, preparation of a flexibility analysis would constitute Federal inquiry into the economic reasonableness of state action. The Clean Air Act forbids EPA to base its actions concerning SIPs on such grounds. *Union Electric Co.* v. *U.S. EPA*, 427 U.S. 246, 255–66 (1976); 42 U.S.C. 7410(a)(2).

C. Unfunded Mandates

Under Section 202 of the Unfunded Mandates Reform Act of 1995 (''Unfunded Mandates Act''), signed into law on March 22, 1995, EPA must prepare a budgetary impact statement to accompany any proposed or final rule that includes a Federal mandate that may result in estimated costs to State, local, or tribal governments in the aggregate; or to private sector, of $100 million or more. Under Section 205, EPA must select the most cost-effective and least burdensome alternative that achieves the objectives of the rule and is consistent with statutory requirements. Section 203 requires EPA to establish a plan for informing and advising any small governments that may be significantly or uniquely impacted by the rule.

EPA has determined that the approval action promulgated does not include a Federal mandate that may result in estimated costs of $100 million or more to either State, local, or tribal governments in the aggregate, or to the private sector. This Federal action approves pre-existing requirements under State or local law, and imposes no new requirements. Accordingly, no additional costs to State, local, or tribal governments, or to the private sector, result from this action.

D. Submission to Congress and the General Accounting Office

The Congressional Review Act, 5 U.S.C. 801 *et seq.*, as added by the Small Business Regulatory Enforcement Fairness Act of 1996, generally provides that before a rule may take effect, the agency promulgating the rule must submit a rule report, which includes a copy of the rule, to each House of the Congress and to the Comptroller General of the United States. EPA will submit a report containing this rule and other required information to the U.S. Senate, the U.S. House of Representatives, and the Comptroller General of the United States prior to publication of the rule in the **Federal Register**. This rule is not a ''major rule'' as defined by 5 U.S.C. 804(2).

E. Petitions for Judicial Review

Under section 307(b)(1) of the Clean Air Act, petitions for judicial review of this action, pertaining to revisions to Maryland's definition of the term ''major stationary source of VOC,'' must be filed in the United States Court of Appeals for the appropriate circuit by July 13, 1998. Filing a petition for reconsideration by the Administrator of this final rule does not affect the finality of this rule for the purposes of judicial review nor does it extend the time within which a petition for judicial review may be filed, and shall not postpone the effectiveness of such rule or action. This action may not be challenged later in proceedings to enforce its requirements. (See section 307(b)(2).)

List of Subjects in 40 CFR Part 52

Environmental protection, Air pollution control, Hydrocarbons, Incorporation by reference, Intergovernmental relations, Ozone.

Dated: April 24, 1998.

Thomas Voltaggio,

Acting Regional Administrator, Region III.

40 CFR part 52, is amended as follows:

PART 52—[AMENDED]

1. The authority citation for part 52 continues to read as follows:

Authority: 42 U.S.C. 7401 *et seq.*

Subpart V—Maryland

2. Section 52.1070 is amended by adding paragraphs (c)(128) to read as follows:

§ 52.1070 Identification of plan.

* * * * *

(c) * * *

(128) Revisions to the Maryland State Implementation Plan submitted on July 12, 1995 by the Maryland Department of the Environment:

(i) Incorporation by reference.

(A) Letter of July 12, 1995 from the Maryland Department of the Environment transmitting additions and deletions to Maryland's State Implementation Plan, pertaining to volatile organic compound regulations in Maryland's air quality regulations, Code of Maryland Administrative Regulations (COMAR) 26.11.

(B) Revisions to COMAR 26.11.19.01B(4), definition of the term ''Major stationary source of VOC,'' adopted by the Secretary of the Environment on April 13, 1995, and effective on May 8, 1995.

(ii) Additional material.

(A) Remainder of the July 12, 1995 Maryland State submittal pertaining to COMAR 26.11.19.01B(4), definition of the term ''Major stationary source of VOC.''

[FR Doc. 98–12719 Filed 5–12–98; 8:45 am]

BILLING CODE 6560–50–P

ENVIRONMENTAL PROTECTION AGENCY

40 CFR Part 63

[FRL–6001–3]

Approval of Section 112(l) Authority for Hazardous Air Pollutants; Perchloroethylene Air Emission Standards for Dry Cleaning Facilities; State of California; South Coast Air Quality Management District

AGENCY: Environmental Protection Agency (EPA).

ACTION: Direct final rule.

SUMMARY: Pursuant to section 112(l) of the Clean Air Act (CAA) and through the California Air Resources Board, the South Coast Air Quality Management District (SCAQMD) requested approval to implement and enforce its ''Rule 1421: Control of Perchloroethylene Emissions from Dry Cleaning Systems'' (Rule 1421) in place of the ''National Perchloroethylene Air Emission Standards for Dry Cleaning Facilities'' (dry cleaning NESHAP) for area sources under SCAQMD's jurisdiction. The Environmental Protection Agency (EPA) has reviewed this request and has found that it satisfies all of the requirements necessary to qualify for approval. Thus, EPA is hereby granting SCAQMD the authority to implement and enforce Rule 1421 in place of the dry cleaning NESHAP for area sources under SCAQMD's jurisdiction.

DATES: This rule is effective on July 13, 1998 without further notice, unless EPA receives relevant adverse comments by June 12, 1998. If EPA receives such

comment, then it will publish a timely withdrawal in the **Federal Register** informing the public that this rule will not take effect.

The incorporation by reference of certain publications listed in the regulations is approved by the Director of the Federal Register as of July 13, 1998.

ADDRESSES: Comments must be submitted to Andrew Steckel at the EPA Region IX office listed below. Copies of SCAQMD's request for approval are available for public inspection at the following locations:

U.S. Environmental Protection Agency, Region IX, Rulemaking Office (AIR–4), Air Division, 75 Hawthorne Street, San Francisco, California 94105–3901. Docket # A–96–25.

California Air Resources Board, Stationary Source Division, 2020 ''L'' Street, P.O. Box 2815, Sacramento, California 95812–2815.

FOR FURTHER INFORMATION CONTACT: Mae Wang, Rulemaking Office (AIR–4), Air Division, U.S. Environmental Protection Agency, Region IX, 75 Hawthorne Street, San Francisco, California 94105–3901, (415) 744–1200.

SUPPLEMENTARY INFORMATION:

I. Background

On September 22, 1993, the Environmental Protection Agency (EPA) promulgated the National Emission Standards for Hazardous Air Pollutants (NESHAP) for perchloroethylene dry cleaning facilities (*see* 58 FR 49354), which was codified in 40 CFR Part 63, Subpart M, ''National Perchloroethylene Air Emission Standards for Dry Cleaning Facilities'' (dry cleaning NESHAP). On May 21, 1996, EPA approved the California Air Resources Board's (CARB) request to implement and enforce section 93109 of Title 17 of the California Code of Regulations, ''Airborne Toxic Control Measure for Emissions of Perchloroethylene from Dry Cleaning Operations'' (dry cleaning ATCM), in place of the dry cleaning NESHAP for area sources (*see* 61 FR 25397). This approval became effective on June 20, 1996.

Thus, under Federal law, from September 22, 1993, to June 20, 1996, all dry cleaning facilities located within the jurisdiction of the South Coast Air Quality Management District (SCAQMD) that used perchloroethylene were subject to and required to comply with the dry cleaning NESHAP. Since June 20, 1996, all such dry cleaning facilities that also qualify as area sources are subject to the Federally-approved dry cleaning ATCM; major sources, as defined by the dry cleaning NESHAP, remain subject to the dry cleaning NESHAP and the Clean Air Act (CAA) Title V operating permit program.

On November 13, 1997, EPA received, through CARB, SCAQMD's request for approval to implement and enforce its June 13, 1997, revision of ''Rule 1421: Control of Perchloroethylene Emissions from Dry Cleaning Operations'' (Rule 1421), as the Federally-enforceable standard for area sources under SCAQMD's jurisdiction. SCAQMD's request, however, does not include the authority to determine equivalent emission control technology for dry cleaning facilities in place of 40 CFR 63.325. This **Federal Register** action for the SCAQMD excludes the Los Angeles County portion of the Southeast Desert Air Quality Management Area, otherwise known as the Antelope Valley Region in Los Angeles County, which is now under the jurisdiction of the Antelope Valley Air Pollution Control District as of July 1, 1997.[1]

II. EPA Action

A. SCAQMD's Dry Cleaning Rule

Under CAA section 112(l), EPA may approve state or local rules or programs to be implemented and enforced in place of certain otherwise applicable CAA section 112 Federal rules, emission standards, or requirements. The Federal regulations governing EPA's approval of state and local rules or programs under section 112(l) are located at 40 CFR Part 63, Subpart E (*see* 58 FR 62262, dated November 26, 1993). Under these regulations, a local air pollution control agency has the option to request EPA's approval to substitute a local rule for the applicable Federal rule. Upon approval, the local agency is given the authority to implement and enforce its rule in place of the otherwise applicable Federal rule. To receive EPA approval using this option, the requirements of 40 CFR 63.91 and 63.93 must be met.

After reviewing the request for approval of SCAQMD's Rule 1421, EPA has determined that this request meets all the requirements necessary to qualify for approval under CAA section 112(l) and 40 CFR 63.91 and 63.93. Accordingly, with the exception of the dry cleaning NESHAP provisions discussed in sections II.A.1 and II.A.2 below, as of the effective date of this action, SCAQMD's Rule 1421 is the Federally-enforceable standard for area sources under SCAQMD's jurisdiction. This rule will be enforceable by the EPA and citizens under the CAA. Although SCAQMD now has primary implementation and enforcement responsibility, EPA retains the right, pursuant to CAA section 112(l)(7), to enforce any applicable emission standard or requirement under CAA section 112.

1. Major Dry Cleaning Sources

Under the dry cleaning NESHAP, dry cleaning facilities are divided between major sources and area sources. SCAQMD's request for approval included only those provisions of the dry cleaning NESHAP that apply to area sources. Thus, dry cleaning facilities using perchloroethylene that qualify as major sources, as defined by the dry cleaning NESHAP, remain subject to the dry cleaning NESHAP and the CAA Title V operating permit program.

2. Authority to Determine Equivalent Emission Control Technology for Dry Cleaning Facilities

Under the dry cleaning NESHAP, any person may petition the EPA Administrator for a determination that the use of certain equipment or procedures is equivalent to the standards contained in the dry cleaning NESHAP (*see* 40 CFR 63.325). In its request, SCAQMD did not seek approval for the provisions in Rule 1421 that would allow for the use of alternative emission control technology without previous approval from EPA (i.e., Rule 1421(c)(17), (d)(3)(A)(v), (d)(4)(B)(ii)(III), and (j)). A source seeking permission to use an alternative means of emission limitation under CAA section 112(h)(3) must receive approval, after notice and opportunity for comment, from EPA before using such alternative means of emission limitation for the purpose of complying with CAA section 112.

B. California's Authorities to Implement and Enforce CAA Section 112 Standards

1. Penalty Authorities

As part of its request for approval of the dry cleaning ATCM, CARB submitted a finding by California's Attorney General stating that ''State law provides civil and criminal enforcement authority consistent with [40 CFR] 63.91(b)(1)(i), 63.91(b)(6)(i), and 70.11, including authority to recover penalties

[1] The State has recently changed the names and boundaries of the air basins located within the Southeast Desert Modified Air Quality Management Area. Pursuant to State regulation the Coachella-San Jacinto Planning Area is now part of the Salton Sea Air Basin (17 Cal. Code. Reg. § 60114); the Victor Valley/Barstow region in San Bernardino County and Antelope Valley Region in Los Angeles County is a part of the Mojave Desert Air Basin (17 Cal. Code. Reg. § 60109). In addition, in 1996 the California Legislature established a new local air agency, the Antelope Valley Air Pollution Control District, to have the responsibility for local air pollution planning and measures in the Antelope Valley Region (California Health & Safety Code § 40106).

and fines in a maximum amount of not less than $10,000 per day *per violation* * * *'' [emphasis added]. In accordance with this finding, EPA understands that the California Attorney General interprets section 39674 and the applicable sections of Division 26, Part 4, Chapter 4, Article 3 (''Penalties'') of the California Health and Safety Code as allowing the collection of penalties for multiple violations per day. In addition, EPA also understands that the California Attorney General interprets section 42400(c)(2) of the California Health and Safety Code as allowing for, among other things, criminal penalties for knowingly rendering inaccurate any monitoring *method* required by a toxic air contaminant rule, regulation, or permit.

As stated in section II.A above, EPA retains the right, pursuant to CAA section 112(l)(7), to enforce any applicable emission standard or requirement under CAA section 112, including the authority to seek civil and criminal penalties up to the maximum amounts specified in CAA section 113.

2. Variances

SCAQMD's Rule 504 and Division 26, Part 4, Chapter 4, Articles 2 and 2.5 of the California Health and Safety Code provide for the granting of variances under certain circumstances. EPA regards these provisions as wholly external to SCAQMD's request for approval to implement and enforce a CAA section 112 program or rule and, consequently, is proposing to take no action on these provisions of state or local law. EPA does not recognize the ability of a state or local agency who has received delegation of a CAA section 112 program or rule to grant relief from the duty to comply with such Federally-enforceable program or rule, except where such relief is granted in accordance with procedures allowed under CAA section 112. As stated above, EPA retains the right, pursuant to CAA section 112(l)(7), to enforce any applicable emission standard or requirement under CAA section 112.

Similarly, section 39666(f) of the California Health and Safety Code allows local agencies to approve alternative methods from those required in the ATCMs, but only as long as such approvals are consistent with the CAA. As mentioned in section II.A.2 above, a source seeking permission to use an alternative means of emission limitation under CAA section 112 must also receive approval, after notice and opportunity for comment, from EPA before using such alternative means of emission limitation for the purpose of complying with CAA section 112.

III. Administrative Requirements

A. Regulatory Flexibility Act

Under the Regulatory Flexibility Act, 5 U.S.C. 600 *et seq.*, EPA must prepare a regulatory flexibility analysis assessing the impact of any proposed or final rule on small entities. 5 U.S.C. 603 and 604. Alternatively, EPA may certify that the rule will not have a significant economic impact on a substantial number of small entities. Small entities include small businesses, small not-for-profit enterprises, and government entities with jurisdiction over populations of less than 50,000.

Approvals under 40 CFR 63.93 do not create any new requirements, but simply approve requirements that the state or local agency is already imposing. Therefore, because this approval does not impose any new requirements, it does not have a significant impact on affected small entities.

B. Unfunded Mandates Reform Act

Under section 202 of the Unfunded Mandates Reform Act of 1995 (''Unfunded Mandates Act''), signed into law on March 22, 1995, EPA must prepare a budgetary impact statement to accompany any proposed or final rule that includes a Federal mandate that may result in estimated costs to state, local, or tribal governments in the aggregate, or to private sector, of $100 million or more. Under section 205, EPA must select the most cost-effective and least burdensome alternative that achieves the objectives of the rule and is consistent with statutory requirements. Section 203 requires EPA to establish a plan for informing and advising any small governments that may be significantly or uniquely impacted by the rule.

EPA has determined that the approval action promulgated does not include a Federal mandate that may result in estimated costs of $100 million or more to either State, local, or tribal governments in the aggregate, or to the private sector. This Federal action approves pre-existing requirements under state or local law, and imposes no new Federal requirements. Accordingly, no additional costs to state, local, or tribal governments, or to the private sector, result from this action.

C. Submission to Congress and the General Accounting Office

The Congressional Review Act, 5 U.S.C. 801 *et seq.*, as added by the Small Business Regulatory Enforcement Fairness Act of 1996, generally provides that before a rule may take effect, the agency promulgating the rule must submit a rule report, which includes a copy of the rule, to each House of the Congress and to the Comptroller General of the United States. EPA will submit a report containing this rule and other required information to the U.S. Senate, the U.S. House of Representatives, and the Comptroller General of the United States prior to publication of the rule in the **Federal Register**. This rule is not a ''major'' rule as defined by 5 U.S.C. 804(2).

D. Petitions for Judicial Review

Under section 307(b)(1) of the Clean Air Act, petitions for judicial review of this action must be filed in the United States Court of Appeals for the appropriate circuit by July 13, 1998. Filing a petition for reconsideration by the Administrator of this final rule does not affect the finality of this rule for the purposes of judicial review nor does it extend the time within which a petition for judicial review may be filed, and shall not postpone the effectiveness of such rule or action. This action may not be challenged later in proceedings to enforce its requirements (*see* section 307(b)(2)).

E. Executive Order 12866

The Office of Management and Budget has exempted this regulatory action from review under Executive Order 12866.

List of Subjects in 40 CFR Part 63

Environmental protection, Administrative practice and procedure, Air pollution control, Hazardous substances, Incorporation by reference, Intergovernmental relations, Reporting and recordkeeping requirements.

Authority: This action is issued under the authority of section 112 of the Clean Air Act, as amended, 42 U.S.C. section 7412.

Dated: April 10, 1998.

Felicia Marcus,

Regional Administrator, Region IX.

Title 40, chapter I, part 63 of the Code of Federal Regulations is amended as follows:

PART 63—[AMENDED]

1. The authority citation for part 63 continues to read as follows:

Authority: 42 U.S.C. 7401, et seq.

2. Section 63.14 is amended by revising paragraph (d)(1) to read as follows:

§ 63.14 Incorporation by reference.

* * * * *

(d) * * *

(1) *California Regulatory Requirements Applicable to the Air*

Toxics Program, April 6, 1998, IBR approved for § 63.99(a)(5)(ii) of subpart E of this part.

Subpart E—Approval of State Programs and Delegation of Federal Authorities

3. Section 63.99 is amended by revising paragraph (a)(5)(ii) introductory text and adding paragraph (a)(5)(ii)(C), to read as follows:

§ 63.99 Delegated Federal authorities.

(a) * * *

(5) * * *

(ii) Affected sources must comply with the *California Regulatory Requirements Applicable to the Air Toxics Program*, April 6, 1998 (incorporated by reference as specified in § 63.14) as described below.

* * * * *

(C) The material incorporated in Chapter 3 of the *California Regulatory Requirements Applicable to the Air Toxics Program* (South Coast Air Quality Management District Rule 1421) pertains to the perchloroethylene dry cleaning source category in the South Coast Air Quality Management District, and has been approved under the procedures in § 63.93 to be implemented and enforced in place of Subpart M—National Perchloroethylene Air Emission Standards for Dry Cleaning Facilities, as it applies to area sources only, as defined in § 63.320(h).

(*1*) Authorities not delegated.

(*i*) South Coast Air Quality Management District is not delegated the Administrator's authority to implement and enforce Rule 1421 in lieu of those provisions of Subpart M which apply to major sources, as defined in § 63.320(g).

Dry cleaning facilities which are major sources remain subject to Subpart M.

(*ii*) South Coast Air Quality Management District is not delegated the Administrator's authority of § 63.325 to determine equivalency of emissions control technologies. Any source seeking permission to use an alternative means of emission limitation, under sections (c)(17), (d)(3)(A)(v), (d)(4)(B)(ii)(III), and (j) of Rule 1421, must also receive approval from the Administrator before using such alternative means of emission limitation for the purpose of complying with section 112.

[FR Doc. 98–12430 Filed 5–12–98; 8:45 am]

BILLING CODE 6560–50–P

ENVIRONMENTAL PROTECTION AGENCY

40 CFR Part 180

[OPP–300651; FRL–5788–2]

RIN 2070–AB78

Pyriproxyfen; Pesticide Tolerances for Emergency Exemptions

AGENCY: Environmental Protection Agency (EPA).

ACTION: Final rule.

SUMMARY: This regulation establishes time-limited tolerances for residues of pyriproxyfen in or on citrus fruit, juice, dried pulp, and oil; pears; and tomatoes. This action is in response to EPA's granting of emergency exemptions under section 18 of the Federal Insecticide, Fungicide, and Rodenticide Act (FIFRA) authorizing use of the pesticide on citrus, pears, and tomatoes. This regulation establishes maximum permissible levels for residues of pyriproxyfen in these food and feed commodities pursuant to section 408(l)(6) of the Federal Food, Drug, and Cosmetic Act (FFDCA), as amended by the Food Quality Protection Act of 1996 (FQPA). The tolerances will expire and are revoked on July 31, 1999.

DATES: This regulation is effective May 13, 1998. Objections and requests for hearings must be received by EPA on or before July 13, 1998.

ADDRESSES: Written objections and hearing requests, identified by the docket control number, [OPP–300651], must be submitted to: Hearing Clerk (1900), Environmental Protection Agency, Rm. M3708, 401 M St., SW., Washington, DC 20460. Fees accompanying objections and hearing requests shall be labeled ''Tolerance Petition Fees'' and forwarded to: EPA Headquarters Accounting Operations Branch, OPP (Tolerance Fees), P.O. Box 360277M, Pittsburgh, PA 15251. A copy of any objections and hearing requests filed with the Hearing Clerk identified by the docket control number, [OPP–300651], must also be submitted to: Public Information and Records Integrity Branch, Information Resources and Services Division (7502C), Office of Pesticide Programs, Environmental Protection Agency, 401 M St., SW., Washington, DC 20460. In person, bring a copy of objections and hearing requests to Rm. 119, CM #2, 1921 Jefferson Davis Hwy., Arlington, VA.

A copy of objections and hearing requests filed with the Hearing Clerk may also be submitted electronically by sending electronic mail (e-mail) to: opp-docket@epamail.epa.gov. Copies of objections and hearing requests must be submitted as an ASCII file avoiding the use of special characters and any form of encryption. Copies of objections and hearing requests will also be accepted on disks in WordPerfect 5.1/6.1 file format or ASCII file format. All copies of objections and hearing requests in electronic form must be identified by the docket control number [OPP–300651]. No Confidential Business Information (CBI) should be submitted through e-mail. Electronic copies of objections and hearing requests on this rule may be filed online at many Federal Depository Libraries.

FOR FURTHER INFORMATION CONTACT: Telephone numbers and e-mail addresses: *For pyriproxyfen on citrus*: Andrea Beard (703) 308-9356, e-mail: beard.andrea@epamail.epa.gov; *For pyriproxyfen on pears or tomatoes*: Virginia Dietrich (703) 308-9359, e-mail: dietrich.virginia@epamail.epa.gov. Office location (both): Crystal Mall #2, 1921 Jefferson Davis Hwy., Arlington, VA. By mail (both): Registration Division 7505C, Office of Pesticide Programs, Environmental Protection Agency, 401 M St., SW., Washington, DC 20460.

SUPPLEMENTARY INFORMATION: EPA, on its own initiative, pursuant to section 408(e) and (l)(6) of the FFDCA, 21 U.S.C. 346a(e) and (l)(6), is establishing tolerances for residues of the pesticide pyriproxyfen, in or on citrus fruit at 0.3 parts per million (ppm), citrus juice and dried citrus pulp at 1.0 ppm, and citrus oil at 300 ppm; pears at 0.2 ppm; and tomatoes at 0.1 ppm. These tolerances will expire and are revoked on July 31, 1999. EPA will publish a document in the **Federal Register** to remove the revoked tolerances from the Code of Federal Regulations.

I. Background and Statutory Authority

The FQPA (Pub. L. 104–170) was signed into law August 3, 1996. FQPA amends both the FFDCA, 21 U.S.C. 301 *et seq*., and the FIFRA, 7 U.S.C. 136 *et seq* . The FQPA amendments went into effect immediately. Among other things, FQPA amends FFDCA to bring all EPA pesticide tolerance-setting activities under a new section 408 with a new safety standard and new procedures. These activities are described below and discussed in greater detail in the final rule establishing the time-limited tolerance associated with the emergency exemption for use of propiconazole on sorghum (61 FR 58135, November 13, 1996) (FRL–5572–9).

New section 408(b)(2)(A)(i) of the FFDCA allows EPA to establish a

tolerance (the legal limit for a pesticide chemical residue in or on a food) only if EPA determines that the tolerance is ''safe.'' Section 408(b)(2)(A)(ii) defines ''safe'' to mean that ''there is a reasonable certainty that no harm will result from aggregate exposure to the pesticide chemical residue, including all anticipated dietary exposures and all other exposures for which there is reliable information.'' This includes exposure through drinking water and in residential settings, but does not include occupational exposure. Section 408(b)(2)(C) requires EPA to give special consideration to exposure of infants and children to the pesticide chemical residue in establishing a tolerance and to ''ensure that there is a reasonable certainty that no harm will result to infants and children from aggregate exposure to the pesticide chemical residue. . . .''

Section 18 of FIFRA authorizes EPA to exempt any Federal or State agency from any provision of FIFRA, if EPA determines that ''emergency conditions exist which require such exemption.'' This provision was not amended by FQPA. EPA has established regulations governing such emergency exemptions in 40 CFR part 166.

Section 408(l)(6) of the FFDCA requires EPA to establish a time-limited tolerance or exemption from the requirement for a tolerance for pesticide chemical residues in food that will result from the use of a pesticide under an emergency exemption granted by EPA under section 18 of FIFRA. Such tolerances can be established without providing notice or period for public comment.

Because decisions on section 18-related tolerances must proceed before EPA reaches closure on several policy issues relating to interpretation and implementation of the FQPA, EPA does not intend for its actions on such tolerance to set binding precedents for the application of section 408 and the new safety standard to other tolerances and exemptions.

II. Emergency Exemption for Pyriproxyfen on Citrus and FFDCA Tolerances

Pyriproxyfen on Citrus: A request was received from California for use of pyriproxyfen on citrus to control red scale, which has developed resistance to available controls, in some localized citrus-producing areas of California, causing significant losses to the affected citrus producers.

Pyriproxyfen on Pears: A request was received from Oregon for the use of pyriproxyfen on pears for control of pear psylla, which has developed resistance to currently available controls, and is expected to cause significant economic loss if not adequately controlled.

Pyriproxyfen on Tomatoes: A request was received from Florida for the use of pyriproxyfen on tomatoes for control of whiteflies. A recently introduced strain or species of whitefly has caused extensive damage over the past several years to various vegetable crops in southern areas of the U.S., including tomatoes. This pest has demonstrated resistance to available materials and is expected to cause significant economic losses if not adequately controlled.

EPA has authorized under FIFRA section 18 the use of pyriproxyfen on citrus for control of red scale in California; on pears for control of pear psylla in Oregon; and, on tomatoes for control of whiteflies in Florida. After having reviewed the submissions, EPA concurs that emergency conditions exist for these States.

As part of its assessment of this emergency exemption, EPA assessed the potential risks presented by residues of pyriproxyfen in or on citrus, pears, and tomatoes. In doing so, EPA considered the new safety standard in FFDCA section 408(b)(2), and EPA decided that the necessary tolerances under FFDCA section 408(l)(6) would be consistent with the new safety standard and with FIFRA section 18. Consistent with the need to move quickly on the emergency exemption in order to address an urgent non-routine situation and to ensure that the resulting food is safe and lawful, EPA is issuing these tolerances without notice and opportunity for public comment under section 408(e), as provided in section 408(l)(6). Although these tolerances will expire and are revoked on July 31, 1999, under FFDCA section 408(l)(5), residues of the pesticide not in excess of the amounts specified in the tolerances remaining in or on citrus commodities, pears and tomatoes after that date will not be unlawful, provided the pesticide is applied in a manner that was lawful under FIFRA, and the residues do not exceed a level that was authorized by these tolerances at the time of that application. EPA will take action to revoke these tolerances earlier if any experience with, scientific data on, or other relevant information on this pesticide indicate that the residues are not safe.

Because these tolerances are being approved under emergency conditions EPA has not made any decisions about whether pyriproxyfen meets EPA's registration requirements for use on citrus, pears, or tomatoes, or whether permanent tolerances for these uses would be appropriate. Under these circumstances, EPA does not believe that these tolerances serve as a basis for registration of pyriproxyfen by a State for special local needs under FIFRA section 24(c). Nor do these tolerances serve as the basis for any State other than California, Oregon, and Florida to use this pesticide on these crops under section 18 of FIFRA without following all provisions of section 18 as identified in 40 CFR part 166. For additional information regarding the emergency exemption for pyriproxyfen, contact the Agency's Registration Division at the address provided above.

III. Risk Assessment and Statutory Findings

EPA performs a number of analyses to determine the risks from aggregate exposure to pesticide residues. First, EPA determines the toxicity of pesticides based primarily on toxicological studies using laboratory animals. These studies address many adverse health effects, including (but not limited to) reproductive effects, developmental toxicity, toxicity to the nervous system, and carcinogenicity. Second, EPA examines exposure to the pesticide through the diet (e.g., food and drinking water) and through exposures that occur as a result of pesticide use in residential settings.

A. Toxicity

1. *Threshold and non-threshold effects.* For many animal studies, a dose response relationship can be determined, which provides a dose that causes adverse effects (threshold effects) and doses causing no observed effects (the ''no-observed effect level'' or ''NOEL'').

Once a study has been evaluated and the observed effects have been determined to be threshold effects, EPA generally divides the NOEL from the study with the lowest NOEL by an uncertainty factor (usually 100 or more) to determine the Reference Dose (RfD). The RfD is a level at or below which daily aggregate exposure over a lifetime will not pose appreciable risks to human health. An uncertainty factor (sometimes called a ''safety factor'') of 100 is commonly used since it is assumed that people may be up to 10 times more sensitive to pesticides than the test animals, and that one person or subgroup of the population (such as infants and children) could be up to 10 times more sensitive to a pesticide than another. In addition, EPA assesses the potential risks to infants and children based on the weight of the evidence of the toxicology studies and determines whether an additional uncertainty factor

is warranted. Thus, an aggregate daily exposure to a pesticide residue at or below the RfD (expressed as 100% or less of the RfD) is generally considered acceptable by EPA. EPA generally uses the RfD to evaluate the chronic risks posed by pesticide exposure. For shorter term risks, EPA calculates a margin of exposure (MOE) by dividing the estimated human exposure into the NOEL from the appropriate animal study. Commonly, EPA finds MOEs lower than 100 to be unacceptable. This 100-fold MOE is based on the same rationale as the 100-fold uncertainty factor.

Lifetime feeding studies in two species of laboratory animals are conducted to screen pesticides for cancer effects. When evidence of increased cancer is noted in these studies, the Agency conducts a weight of the evidence review of all relevant toxicological data including short-term and mutagenicity studies and structure activity relationship. Once a pesticide has been classified as a potential human carcinogen, different types of risk assessments (e.g., linear low dose extrapolations or MOE calculation based on the appropriate NOEL) will be carried out based on the nature of the carcinogenic response and the Agency's knowledge of its mode of action.

2. *Differences in toxic effect due to exposure duration.* The toxicological effects of a pesticide can vary with different exposure durations. EPA considers the entire toxicity data base, and based on the effects seen for different durations and routes of exposure, determines which risk assessments should be done to assure that the public is adequately protected from any pesticide exposure scenario. Both short and long durations of exposure are always considered. Typically, risk assessments include ''acute,'' ''short-term,'' ''intermediate term,'' and ''chronic'' risks. These assessments are defined by the Agency as follows.

Acute risk, by the Agency's definition, results from 1-day consumption of food and water, and reflects toxicity which could be expressed following a single oral exposure to the pesticide residues. High end exposure to food and water residues are typically assumed.

Short-term risk results from exposure to the pesticide for a period of 1-7 days, and therefore overlaps with the acute risk assessment. Historically, this risk assessment was intended to address primarily dermal and inhalation exposure which could result, for example, from residential pesticide applications. However, since enaction of FQPA, this assessment has been expanded to include both dietary and non-dietary sources of exposure, and will typically consider exposure from food, water, and residential uses when reliable data are available. In this assessment, risks from average food and water exposure, and high-end residential exposure, are aggregated. High-end exposures from all three sources are not typically added because of the very low probability of this occurring in most cases, and because the other conservative assumptions built into the assessment assure adequate protection of public health. However, for cases in which high-end exposure can reasonably be expected from multiple sources (e.g. frequent and widespread homeowner use in a specific geographical area), multiple high-end risks will be aggregated and presented as part of the comprehensive risk assessment/characterization. Since the toxicological endpoint considered in this assessment reflects exposure over a period of at least 7 days, an additional degree of conservatism is built into the assessment; i.e., the risk assessment nominally covers 1-7 days exposure, and the toxicological endpoint/NOEL is selected to be adequate for at least 7 days of exposure. (Toxicity results at lower levels when the dosing duration is increased.)

Intermediate-term risk results from exposure for 7 days to several months. This assessment is handled in a manner similar to the short-term risk assessment.

Chronic risk assessment describes risk which could result from several months to a lifetime of exposure. For this assessment, risks are aggregated considering average exposure from all sources for representative population subgroups including infants and children.

B. Aggregate Exposure

In examining aggregate exposure, FFDCA section 408 requires that EPA take into account available and reliable information concerning exposure from the pesticide residue in the food in question, residues in other foods for which there are tolerances, residues in groundwater or surface water that is consumed as drinking water, and other non-occupational exposures through pesticide use in gardens, lawns, or buildings (residential and other indoor uses). Dietary exposure to residues of a pesticide in a food commodity are estimated by multiplying the average daily consumption of the food forms of that commodity by the tolerance level or the anticipated pesticide residue level. The Theoretical Maximum Residue Contribution (TMRC) is an estimate of the level of residues consumed daily if each food item contained pesticide residues equal to the tolerance. In evaluating food exposures, EPA takes into account varying consumption patterns of major identifiable subgroups of consumers, including infants and children. The TMRC is a ''worst case'' estimate since it is based on the assumptions that food contains pesticide residues at the tolerance level and that 100% of the crop is treated by pesticides that have established tolerances. If the TMRC exceeds the RfD or poses a lifetime cancer risk that is greater than approximately one in a million, EPA attempts to derive a more accurate exposure estimate for the pesticide by evaluating additional types of information (anticipated residue data and/or percent of crop treated data) which show, generally, that pesticide residues in most foods when they are eaten are well below established tolerances.

Percent of crop treated estimates are derived from federal and private market survey data. Typically, a range of estimates are supplied and the upper end of this range is assumed for the exposure assessment. By using this upper end estimate of percent of crop treated, the Agency is reasonably certain that exposure is not understated for any significant subpopulation group. Further, regional consumption information is taken into account through EPA's computer-based model for evaluating the exposure of significant subpopulations including several regional groups, to pesticide residues. For this pesticide, the most highly exposed population subgroup (Children 1 - 6 Years Old) was not regionally based.

IV. Aggregate Risk Assessment and Determination of Safety

Consistent with section 408(b)(2)(D), EPA has reviewed the available scientific data and other relevant information in support of this action, EPA has sufficient data to assess the hazards of pyriproxyfen and to make a determination on aggregate exposure, consistent with section 408(b)(2), for time-limited tolerances for residues of pyriproxyfen on citrus fruit at 0.3 ppm, citrus juice and dried citrus pulp at 1.0 ppm, and citrus oil at 300 ppm; pears at 0.2 ppm; and tomatoes at 0.1 ppm. EPA's assessment of the dietary exposures and risks associated with establishing the tolerances follows.

A. Toxicological Profile

EPA has evaluated the available toxicity data and considered its validity, completeness, and reliability as well as

the relationship of the results of the studies to human risk. EPA has also considered available information concerning the variability of the sensitivities of major identifiable subgroups of consumers, including infants and children. The nature of the toxic effects caused by pyriproxyfen are discussed below.

1. *Acute toxicity*. There are no acute dietary endpoints of concern for pyriproxyfen. No concern exists for acute dietary exposure to pyriproxyfen residues.

2. *Short - and intermediate - term toxicity*. There are no endpoints and no concern exists for short- or intermediate-term toxicity from pyriproxyfen.

3. *Chronic toxicity*. EPA has established the RfD for pyriproxyfen at 0.35 milligrams/kilogram/day (mg/kg/day). This RfD is based on 2-year and 90-day feeding studies in rats with a NOEL of 35.1 mg/kg/day and an uncertainty factor of 100, based on intra- and interspecies differences. At the LOEL of 141.28 mg/kg/day, there was a decrease in body weight gain in females.

4. *Carcinogenicity*. Pyriproxyfen has been classified in Group E of EPA's cancer classification system, indicating there is evidence of non-carcinogenicity for humans. Therefore, there is no concern for cancer risk from exposure to pyriproxyfen.

B. Exposures and Risks

1. *From food and feed uses*. Time-limited tolerances have been established (40 CFR 180.510) for the residues of pyriproxyfen, in or on cotton commodities, in association with the use under emergency exemptions. There are currently no registered food uses for pyriproxyfen, and thus no permanent tolerances established. Risk assessments were conducted by EPA to assess dietary exposures and risks from pyriproxyfen as follows:

Chronic exposure and risk. As stated above, there are time-limited tolerances for cotton commodities established in connection with use under emergency exemptions. This risk assessment took these into account, as well as these tolerances being established for citrus commodities, pears, and tomatoes. The chronic dietary (food only) risk assessment used tolerance level residues and assumed 100% crop treated. Therefore, the resulting exposure estimates should be viewed as conservative; further refinement using anticipated residues and/or percent of crop treated would result in lower dietary exposure estimates. For chronic dietary (food only) risk estimates, the two most highly exposed subgroups, Non-Nursing Infants (<1 Year Old) and Children (1-6 Years Old) had 1.54 and 1.84% of the RfD utilized, respectively. All other population subgroups had less than 1% of the RfD utilized.

2. *From drinking water*. A Tier II drinking water assessment of pyriproxyfen was conducted, using computer models which simulate the fate in a surface water body. The estimated environmental concentrations (EECs) are generated for high exposure agricultural scenarios and represent one in ten years EECs in a stagnant pond with no outlet that receives pesticide loading from an adjacent 100% cropped, 100% treated field. As such, these computer generated EECs represent conservative screening levels for ponds and lakes and are used only for screening. The EECs for surface water ranged from a peak of 0.677 ppb, to a 60-days average of 0.142 ppb, to a 1-year average of 0.103 ppb. These estimates are based on 2 applications at a rate of 0.11 lb. active ingredient per acre. For ground water, a computer model was used which resulted in estimated 60-day average concentrations of pyriproxyfen of 0.006 ppb.

Chronic exposure and risk. A human health drinking water level of concern (DWLOC) is the concentration in drinking water that would be acceptable as an upper limit in light of total aggregate exposure to that chemical from food, water and non-occupational (residential) sources. The DWLOC for chronic risk is the concentration in drinking water as a part of the aggregate chronic exposure, that occupies no more than 100% of the RfD. In conducting these calculations, default body weights are used of 70 kg (adult male), 60 kg (adult female) and 10 kg (child); default consumption values of water are used of 2 liters per day for adults and 1 liter per day for children. Using these assumptions and the levels provided by the computer models, given above, the resultant percentage of the RfD utilized for both children and adults was calculated to be 0.35%. Therefore, taking into account present uses, including this use on citrus under section 18, EPA concludes that there is reasonable certainty of no harm if these tolerances are established.

3. *From non-dietary exposure*. Pyriproxyfen is currently registered for use on the following residential non-food sites: Products for flea and tick control, including foggers, aerosol sprays, emulsifiable concentrates, and impregnated material (pet collars).

Chronic exposure and risk. Long-term exposure to pyriproxyfen in residential use products is not expected. Consumer use of these products typically results in short-term intermittent exposures. Hence, a chronic residential exposure assessment is not required.

4. *Cumulative exposure to substances with common mechanism of toxicity*. Section 408(b)(2)(D)(v) requires that, when considering whether to establish, modify, or revoke a tolerance, the Agency consider ''available information'' concerning the cumulative effects of a particular pesticide's residues and ''other substances that have a common mechanism of toxicity.'' The Agency believes that ''available information'' in this context might include not only toxicity, chemistry, and exposure data, but also scientific policies and methodologies for understanding common mechanisms of toxicity and conducting cumulative risk assessments. For most pesticides, although the Agency has some information in its files that may turn out to be helpful in eventually determining whether a pesticide shares a common mechanism of toxicity with any other substances, EPA does not at this time have the methodologies to resolve the complex scientific issues concerning common mechanism of toxicity in a meaningful way. EPA has begun a pilot process to study this issue further through the examination of particular classes of pesticides. The Agency hopes that the results of this pilot process will increase the Agency's scientific understanding of this question such that EPA will be able to develop and apply scientific principles for better determining which chemicals have a common mechanism of toxicity and evaluating the cumulative effects of such chemicals. The Agency anticipates, however, that even as its understanding of the science of common mechanisms increases, decisions on specific classes of chemicals will be heavily dependent on chemical specific data, much of which may not be presently available.

Although at present the Agency does not know how to apply the information in its files concerning common mechanism issues to most risk assessments, there are pesticides as to which the common mechanism issues can be resolved. These pesticides include pesticides that are toxicologically dissimilar to existing chemical substances (in which case the Agency can conclude that it is unlikely that a pesticide shares a common mechanism of activity with other substances) and pesticides that produce a common toxic metabolite (in which case common mechanism of activity will be assumed).

EPA does not have, at this time, available data to determine whether pyriproxyfen has a common mechanism

of toxicity with other substances or how to include this pesticide in a cumulative risk assessment. Unlike other pesticides for which EPA has followed a cumulative risk approach based on a common mechanism of toxicity, pyriproxyfen does not appear to produce a toxic metabolite produced by other substances. For the purposes of this tolerance action, therefore, EPA has not assumed that pyriproxyfen has a common mechanism of toxicity with other substances.

C. Aggregate Risks and Determination of Safety for U.S. Population

1. *Acute risk.* There are no acute dietary endpoints of concern for pyriproxyfen. No concern exists for acute dietary exposure to pyriproxyfen residues.

2. *Chronic risk.* Using the TMRC exposure assumptions described above, EPA has concluded that aggregate exposure to pyriproxyfen from food and drinking water will utilize 0.67 and 0.35% of the RfD, respectively, for the U.S. population (total of 1.02% RfD utilized). The major identifiable subgroup with the highest aggregate exposure is Children (1-6 Years Old), with 1.84 and 0.35% of the RfD utilized by food and drinking water, respectively, for a total of 2.19% of the RfD utilized. This is discussed further below. EPA generally has no concern for exposures below 100% of the RfD because the RfD represents the level at or below which daily aggregate dietary exposure over a lifetime will not pose appreciable risks to human health. EPA concludes that there is a reasonable certainty that no harm will result from aggregate exposure to pyriproxyfen residues.

3. *Short- and intermediate-term risk.* Short- and intermediate-term aggregate exposure takes into account chronic dietary food and water (considered to be a background exposure level) plus indoor and outdoor residential exposure. There are no endpoints and no concern exists for short- or intermediate-term toxicity from pyriproxyfen.

D. Aggregate Cancer Risk for U.S. Population

Pyriproxyfen has been classified in Group E of EPA's cancer classification system, indicating there is evidence of non-carcinogenicity for humans. Therefore, there is no concern for cancer risk from exposure to pyriproxyfen.

E. Aggregate Risks and Determination of Safety for Infants and Children

1. *Safety factor for infants and children*— i. *In general.* In assessing the potential for additional sensitivity of infants and children to residues of pyriproxyfen, EPA considered data from developmental toxicity studies in the rat and rabbit and a two-generation reproduction study in the rat. The developmental toxicity studies are designed to evaluate adverse effects on the developing organism resulting from maternal pesticide exposure during gestation. Reproduction studies provide information relating to effects from exposure to the pesticide on the reproductive capability of mating animals and data on systemic toxicity.

FFDCA section 408 provides that EPA shall apply an additional tenfold margin of safety for infants and children in the case of threshold effects to account for pre-and post-natal toxicity and the completeness of the database unless EPA determines that a different margin of safety will be safe for infants and children. Margins of safety are incorporated into EPA risk assessments either directly through use of a MOE analysis or through using uncertainty (safety) factors in calculating a dose level that poses no appreciable risk to humans. EPA believes that reliable data support using the standard MOE and uncertainty factor (usually 100 for combined inter- and intra-species variability)) and not the additional tenfold MOE/uncertainty factor when EPA has a complete data base under existing guidelines and when the severity of the effect in infants or children or the potency or unusual toxic properties of a compound do not raise concerns regarding the adequacy of the standard MOE/safety factor.

ii. *Developmental toxicity studies.* In the developmental study in rats, the maternal (systemic) NOEL was 100 mg/kg/day, based on decreased bodyweight, body weight gain, food consumption, and increased water consumption at the LOEL of 300 mg/kg/day. The developmental (fetal) NOEL was 300 mg/kg/day, based on increased skeletal variations and unspecified visceral variations at the LOEL of 1,000 mg/kg/day

In the developmental toxicity study in rabbits, the maternal (systemic) NOEL was 100 mg/kg/day, based on abortions, soft stools, emaciation, decreased activity, and bradypnea at the LOEL of 300 mg/kg/day. The developmental (pup) NOEL was 300 mg/kg/day, based on decreased viable litters available for examination at the LOEL of 1,000 mg/kg/day.

iii. *Reproductive toxicity study.* In the 2-generation reproductive toxicity study in rats, the maternal (systemic) NOEL was 87/96 mg/kg/day for Males/Females, based on decreased body weights, body weight gains, and increased liver weight associated with histopathological findings in the liver at the LOEL of 453/498 mg/kg/day for M/F. The developmental (pup) NOEL was 87/96 mg/kg/day, based on decreased body weight on lactation days 14 and 21 at the LOEL of 453/498 mg/kg/day. The reproductive NOEL was 453/498 mg/kg/day for M/F (the highest dose tested).

iv. *Pre- and post-natal sensitivity.* In both rats and rabbits, developmental studies demonstrated that the developmental findings occurred at dose levels at which maternal toxicity was also present, demonstrating no special pre-natal sensitivity for developing fetuses. In the post-natal evaluation to infants and children, as shown in the results of the rat reproduction study, the NOEL and LOEL for both parental systemic toxicity and pup toxicity occurred at the same dose levels, demonstrating no special post-natal sensitivity for infants and children.

v. *Conclusion.* Given the fact that there is a complete toxicity data base for pyriproxyfen, and no special pre- or post- natal sensitivities are indicated for infants and children, an additional 10-fold safety factor is not warranted. EPA concludes that there is reasonable certainty of safety for infants and children exposed to dietary residues of pyriproxyfen.

2. *Acute risk.* There are no acute dietary endpoints of concern for pyriproxyfen. No concern exists for acute dietary exposure to pyriproxyfen residues.

3. *Chronic risk.* Using the conservative exposure assumptions described above, EPA has concluded that aggregate exposure to pyriproxyfen from food will utilize 1.84% of the RfD for Children 1-6 years old, the most highly exposed subgroup of infants and children. EPA generally has no concern for exposures below 100% of the RfD because the RfD represents the level at or below which daily aggregate dietary exposure over a lifetime will not pose appreciable risks to human health. The risk from drinking water is conservatively estimated to utilize 0.35% of the RfD for infants and children, as discussed above. Despite the potential for exposure to pyriproxyfen in drinking water and from non-dietary, non-occupational exposure, EPA does not expect the aggregate exposure to exceed 100% of the RfD. EPA concludes that there is a reasonable certainty that no harm will result to infants and children from aggregate exposure to pyriproxyfen residues.

4. *Short- or intermediate-term risk.* There are no endpoints and no concern exists for short- or intermediate-term toxicity from pyriproxyfen.

V. Other Considerations

A. Metabolism In Plants and Animals

For the purposes of these uses under section 18, the nature of the residue in plants is adequately understood, and the residue to be regulated is parent pyriproxyfen *per se* [4-phenoxyphenyl (RS)-2-(2-pyridyloxy)propyl ether]. There are no detectable residues expected in animal commodities as a result of these uses.

B. Analytical Enforcement Methodology

Adequate analytical methodology is available to enforce the tolerance expression, in residue analytical method RM-33P-2 using gas chromatography with a nitrogen-phosphorus detector. This has been validated by EPA and is available from the Registrant of pyriproxyfen, Valent U.S.A. Corporation, Dublin, California.

C. Magnitude of Residues

Residues of pyriproxyfen are not expected to exceed 0.3 ppm in/on citrus fruit, 1.0 ppm in citrus juice and dried citrus pulp, and 300 ppm in citrus oil; 0.2 ppm in/on pears; and 0.1 ppm in/on tomatoes; no detectable residues are expected to occur in animal commodities, as a result of these emergency exemption uses.

D. International Residue Limits

There are no Canadian, Mexican, or Codex maximum residue limits (MRLs) for residues of pyriproxyfen in/on citrus, pears, or tomatoes.

E. Rotational Crop Restrictions

There are no applicable rotational crop restrictions for these emergency exemption uses.

VI. Conclusion

Therefore, the tolerances are established for residues of pyriproxyfen in/on citrus fruit at 0.3 ppm, citrus juice and dried citrus pulp at 1.0 ppm, and citrus oil at 300 ppm; 0.2 ppm in/on pears; and 0.1 ppm in/on tomatoes.

VII. Objections and Hearing Requests

The new FFDCA section 408(g) provides essentially the same process for persons to ''object'' to a tolerance regulation issued by EPA under new section 408(e) and (l)(6) as was provided in the old section 408 and in section 409. However, the period for filing objections is 60 days, rather than 30 days. EPA currently has procedural regulations which govern the submission of objections and hearing requests. These regulations will require some modification to reflect the new law. However, until those modifications can be made, EPA will continue to use those procedural regulations with appropriate adjustments to reflect the new law.

Any person may, by July 13, 1998, file written objections to any aspect of this regulation and may also request a hearing on those objections. Objections and hearing requests must be filed with the Hearing Clerk, at the address given above (40 CFR 178.20). A copy of the objections and/or hearing requests filed with the Hearing Clerk should be submitted to the OPP docket for this rulemaking. The objections submitted must specify the provisions of the regulation deemed objectionable and the grounds for the objections (40 CFR 178.25). Each objection must be accompanied by the fee prescribed by 40 CFR 180.33(i). If a hearing is requested, the objections must include a statement of the factual issues on which a hearing is requested, the requestor's contentions on such issues, and a summary of any evidence relied upon by the requestor (40 CFR 178.27). A request for a hearing will be granted if the Administrator determines that the material submitted shows the following: There is genuine and substantial issue of fact; there is a reasonable possibility that available evidence identified by the requestor would, if established, resolve one or more of such issues in favor of the requestor, taking into account uncontested claims or facts to the contrary; and resolution of the factual issues in the manner sought by the requestor would be adequate to justify the action requested (40 CFR 178.32). Information submitted in connection with an objection or hearing request may be claimed confidential by marking any part or all of that information as CBI. Information so marked will not be disclosed except in accordance with procedures set forth in 40 CFR part 2. A copy of the information that does not contain CBI must be submitted for inclusion in the public record. Information not marked confidential may be disclosed publicly by EPA without prior notice.

VIII. Public Docket

EPA has established a record for this rulemaking under docket control number [OPP–300651] (including any comments and data submitted electronically). A public version of this record, including printed, paper versions of electronic comments, which does not include any information claimed as CBI, is available for inspection from 8:30 a.m. to 4 p.m., Monday through Friday, excluding legal holidays. The public record is located in Room 119 of the Public Information and Records Integrity Branch, Information Resources and Services Division (7502C), Office of Pesticide Programs, Environmental Protection Agency, Crystal Mall #2, 1921 Jefferson Davis Hwy., Arlington, VA.

Electronic comments may be sent directly to EPA at:

opp-docket@epamail.epa.gov.

Electronic comments must be submitted as an ASCII file avoiding the use of special characters and any form of encryption.

The official record for this rulemaking, as well as the public version, as described above will be kept in paper form. Accordingly, EPA will transfer any copies of objections and hearing requests received electronically into printed, paper form as they are received and will place the paper copies in the official rulemaking record which will also include all comments submitted directly in writing. The official rulemaking record is the paper record maintained at the Virginia address in ''ADDRESSES'' at the beginning of this document.

IX. Regulatory Assessment Requirements

This final rule establishes time-limited tolerances under FFDCA section 408(d) in response to petitions submitted to the Agency. The Office of Management and Budget (OMB) has exempted these types of actions from review under Executive Order 12866, entitled Regulatory Planning and Review (58 FR 51735, October 4, 1993). This final rule does not contain any information collections subject to OMB approval under the Paperwork Reduction Act (PRA), 44 U.S.C. 3501 *et seq.*, or impose any enforceable duty or contain any unfunded mandate as described under Title II of the Unfunded Mandates Reform Act of 1995 (UMRA) (Pub. L. 104-4). Nor does it require any prior consultation as specified by Executive Order 12875, entitled Enhancing the Intergovernmental Partnership (58 FR 58093, October 28, 1993), or special considerations as required by Executive Order 12898, entitled Federal Actions to Address Environmental Justice in Minority Populations and Low-Income Populations (59 FR 7629, February 16, 1994), or require OMB review in accordance with Executive Order 13045, entitled Protection of Children from Environmental Health Risks and Safety Risks (62 FR 19885, April 23, 1997).

In addition, since these tolerances and exemptions that are established under FFDCA section 408 (l)(6), such as the time-limited tolerances in this final rule, do not require the issuance of a proposed rule, the requirements of the Regulatory Flexibility Act (RFA) (5 U.S.C. 601 *et seq.*) do not apply. Nevertheless, the Agency has previously assessed whether establishing tolerances, exemptions from tolerances, raising tolerance levels or expanding exemptions might adversely impact small entities and concluded, as a generic matter, that there is no adverse economic impact. The factual basis for the Agency's generic certification for tolerance actions published on May 4, 1981 (46 FR 24950), and was provided to the Chief Counsel for Advocacy of the Small Business Administration.

X. Submission to Congress and the General Accounting Office

Under 5 U.S.C. 801(a)(1)(A), as added by the Small Business Regulatory Enforcement Fairness Act of 1996, the Agency has submitted a report containing this rule and other required information to the U.S. Senate, the U.S. House of Representatives, and the Comptroller General of the General Accounting Office prior to publication of this rule in today's **Federal Register**. This is not a ''major rule'' as defined by 5 U.S.C. 804(2).

List of Subjects in 40 CFR Part 180

Environmental protection, Administrative practice and procedure, Agricultural commodities, Pesticides and pests, Reporting and recordkeeping requirements.

Dated: April 27, 1998.

James Jones,

Director, Registration Division, Office of Pesticide Programs.

Therefore, 40 CFR chapter I is amended as follows:

PART 180— [AMENDED]

1. The authority citation for part 180 continues to read as follows:

Authority: 21 U.S.C. 346a and 371.

2. In § 180.510, in paragraph (b) by alphabetically adding the following commodities to the table to read as follows:

§ 180.510 Pyriproxyfen; tolerances for residues.

* * * * *

(b) * * *

Commodity	Parts per million	Expiration/revocation date
Citrus fruit	0.3	7/31/99
Citrus juice	1.0	7/31/99
Citrus oil	300	7/31/99
Citrus pulp, dried	1.0	7/31/99
* *		*
* *		*
*		
Pears	0.2	7/31/99
Tomatoes	0.1	7/31/99

* * * * *

[FR Doc. 98–12426 Filed 5–12–98; 8:45 am]

BILLING CODE 6560–50–F

ENVIRONMENTAL PROTECTION AGENCY

40 CFR Part 180

[OPP–300636A; FRL–5787–6]

RIN 2070–AB78

N-(4-fluorophenyl)-N-(1-methylethyl)-2-[[5-(trifluoromethyl)-1,3,4-thiadiazol-2-yl]oxy]acetamide; Time-Limited Pesticide Tolerance, Correction

AGENCY: Environmental Protection Agency (EPA).

ACTION: Final rule; correction.

SUMMARY: EPA is correcting the time-limited tolerance levels for the combined residues of the herbicide *N*-(4-fluorophenyl)-*N*-(1-methylethyl)-2-[[5-(trifluoromethyl)-1,3,4-thiadiazol-2-yl]oxy]acetamide and its metabolites containing the 4-fluoro-*N*-methylethyl benzenamine moiety in or on corn, field, grain; corn, field, forage; corn, field, stover, and soybean seed.

DATES: This correction is effective on April 10, 1998.

FOR FURTHER INFORMATION CONTACT: By mail: James A. Tompkins, Registration Division 7505C, Office of Pesticide Programs, Environmental Protection Agency, 401 M St., SW., Washington, DC 20460. Office location, telephone number, and e-mail address: Crystal Mall #2, 1921 Jefferson Davis Hwy., Arlington, VA, (703) 305–5697, e-mail: tompkins.jim@epamail.epa.gov.

SUPPLEMENTARY INFORMATION: In the **Federal Register** of April 10, 1998 (63 FR 17692)(5782–9), EPA issued a regulation establishing time-limited pesticide tolerances under section 408 of the Federal Food, Drug, and Cosmetic Act (FFDCA), 21 U.S.C. 346a(e) for residues of *N*-(4-fluorophenyl)-*N*-(1-methylethyl)-2-[[5-(trifluoromethyl)-1,3,4-thiadiazol-2-yl]oxy]acetamide on ''corn, field, forage,'' and ''corn, field, grain'' corn, field, stover, and soybean seed (40 CFR 180.527). Inadvertently, the tolerance levels for corn, field, grain and corn, field, forage were transposed. This document corrects the tolerance levels by correcting § 180.527.

I. Regulatory Assessment Requirements

This final rule does not impose any requirements. It only implements a technical correction to the Code of Federal Regulations (CFR). As such, this action does not require review by the Office of Management and Budget (OMB) under Executive Order 12866, entitled Regulatory Planning and Review (58 FR 51735, October 4, 1993), the Paperwork Reduction Act (PRA), 44 U.S.C. 3501 *et seq.*, or Executive Order 13045, entitled Protection of Children from Environmental Health Risks and Safety Risks (62 FR 19885, April 23, 1997). For the same reason, it does not require any action under Title II of the Unfunded Mandates Reform Act of 1995 (UMRA) (Pub. L. 104–4), Executive Order 12875, entitled Enhancing the Intergovernmental Partnership (58 FR 58093, October 28, 1993), or Executive Order 12898, entitled Federal Actions to Address Environmental Justice in Minority Populations and Low-Income Populations (59 FR 7629, February 16, 1994). In addition, since this type of action does not require any proposal, no action is needed under the Regulatory Flexibility Act (RFA) (5 U.S.C. 601 et seq.).

II. Submission to Congress and the General Accounting Office

Under 5 U.S.C. 801(a)(1)(A), as added by the Small Business Regulatory Enforcement Fairness Act of 1996, the Agency has submitted a report containing this rule and other required information to the U.S. Senate, the U.S. House of Representatives, and the Comptroller General of the General Accounting Office prior to publication of this rule in today's **Federal Register**. This is not a ''major rule'' as defined by 5 U.S.C. 804(2).''

List of Subjects in 40 CFR Part 180

Environmental protection, Administrative practice and procedure, Agricultural commodities, Pesticides and pests, Reporting and recordkeeping requirements.

Dated: April 29, 1998

Peter Caulkins,

Acting Director, Registration Division, Office of Pesticide Programs.

Therefore, 40 CFR chapter I is corrected as follows:

PART 180—[CORRECTED]

1. The authority citation for part 180 continues to read as follows:

Authority: 21 U.S.C. 346a and 371.

2. By correcting § 180.527, to read as follows:

§ 180.527 N-(4-fluorophenyl)-N-(1-methylethyl)-2-[[5-(trifluoromethyl)-1,3,4-thiadiazol-2-yl]oxy]acetamide; tolerances for residues.

(a) *General.* (1) Time-limited tolerances are established for combined residues of the herbicide, *N*-(4-fluorophenyl)-*N*-(1-methylethyl)-2-[[5-(trifluoromethyl)-1,3,4-thiadiazol-2-yl]oxy]acetamide and its metabolites containing the 4-fluoro-*N*-methylethyl benzenamine moiety in or on the following raw agricultural commodities:

Commodity	Parts per million	Expiration/Revocation Date
Corn, field, forage ..	0.4	4/30/03
Corn, field, grain	0.05	4/30/03
Corn, field, stover ...	0.4	4/30/03
Soybean seed	0.1	4/30/03

(2) Residues in these commodities not in excess of the established tolerance resulting from the use described in paragraph (a) of this section remaining after expiration of the time-limited tolerance will not be considered to be actionable if the herbicide is applied during the term of and in accordance with the provisions of the above regulation.

(b) *Section 18 emergency exemptions.* [Reserved]

(c) *Tolerances with regional registrations.* [Reserved]

(d) *Indirect or inadvertent residues.* [Reserved]

[FR Doc. 98–12490 Filed 5–12–98; 8:45 am]

BILLING CODE 6560–50–F

ENVIRONMENTAL PROTECTION AGENCY

40 CFR Part 180

[OPP–300661; FRL–5790–8]

RIN 2070–AB78

Bromoxynil; Pesticide Tolerance

AGENCY: Environmental Protection Agency (EPA).

ACTION: Final rule.

SUMMARY: This regulation establishes tolerances for bromoxynil and DBHA in or on cotton. In addition, this regulation establishes tolerances for bromoxynil and DBHA in or on meat, meat by products, and fat of cattle, hogs, horses, goats, and sheep. Further, this regulation establishes tolerances for bromoxynil and DBHA in milk, eggs, and poultry meat, meat by-products, and fat. Rhone-Poulenc Ag Company requested the tolerances for cotton under the Federal Food, Drug, and Cosmetic Act, as amended by the Food Quality Protection Act of 1996 (Pub. L. 104-170).

DATES: This regulation is effective May 13, 1998. Objections and requests for hearings must be received by EPA on or before July 13, 1998.

ADDRESSES: Written objections and hearing requests, identified by the docket control number, [OPP–300661], must be submitted to: Hearing Clerk (1900), Environmental Protection Agency, Rm. M3708, 401 M St., SW., Washington, DC 20460. Fees accompanying objections and hearing requests shall be labeled ''Tolerance Petition Fees'' and forwarded to: EPA Headquarters Accounting Operations Branch, OPP (Tolerance Fees), P.O. Box 360277M, Pittsburgh, PA 15251. A copy of any objections and hearing requests filed with the Hearing Clerk identified by the docket control number, [OPP–300661], must also be submitted to: Public Information and Records Integrity Branch, Information Resources and Services Division (7502C), Office of Pesticide Programs, Environmental Protection Agency, 401 M St., SW., Washington, DC 20460. In person, bring a copy of objections and hearing requests to Rm. 119, CM #2, 1921 Jefferson Davis Hwy., Arlington, VA.

A copy of objections and hearing requests filed with the Hearing Clerk may also be submitted electronically by sending electronic mail (e-mail) to: opp-docket@epamail.epa.gov. Copies of objections and hearing requests must be submitted as an ASCII file avoiding the use of special characters and any form of encryption. Copies of objections and hearing requests will also be accepted on disks in WordPerfect 5.1/6.1 file format or ASCII file format. All copies of objections and hearing requests in electronic form must be identified by the docket control number [OPP–300661]. No Confidential Business Information (CBI) should be submitted through e-mail. Electronic copies of objections and hearing requests on this rule may be filed online at many Federal Depository Libraries.

FOR FURTHER INFORMATION CONTACT: By mail: Jim Tompkins, Registration Division (7505C), Office of Pesticide Programs, Environmental Protection Agency, 401 M St., SW., Washington, DC 20460. Office location, telephone number, and e-mail address: Crystal Mall #2, 1921 Jefferson Davis Hwy., Arlington, VA, 703-305-5697, e-mail: tompkins.jim@epamail.epa.gov.

SUPPLEMENTARY INFORMATION: In the **Federal Register** of November 26, 1997 (62 FR 63170) (FRL–5755–6), EPA, issued a notice pursuant to section 408 of the Federal Food, Drug, and Cosmetic Act (FFDCA), 21 U.S.C. 346a(e) announcing the filing of a pesticide petition (PP) 3F4233 for tolerance by Rhone-Poulenc Ag Company. This notice included a summary of the petition prepared by Rhone-Poulenc Ag Company, the registrant. Comments in response to the notice of filing were received from public interest groups, individual concerned citizens, agricultural extension agents, representatives of State agencies, individual growers, and industry groups. The issues raised were the same issues raised in response to the proposed rule (May 2, 1997, 62 FR 24065) (FRL–5617–5) for the bromoxynil tolerance that expired on January 1, 1998. Many of the comments are addressed in this document. Responses to other significant comments are presented in Unit III. of the final rule for last year's tolerance (June 18, 1997, 62 FR 33019) (FRL–5724–9) or in a Response to Comments document that has been included in the docket for that action.

The petition requested that 40 CFR 180.324 be amended by establishing tolerances for residues of the herbicide bromoxynil plus its metabolite DBHA (3,5-dibromo-4-hydroxybenzoic acid) resulting from the application of octanoic and heptanoic acid esters of bromoxynil to cotton: undelinted cottonseed at 7 parts per million (ppm), cotton gin byproducts at 50 ppm, and cotton hulls at 21 ppm. (Active ingredient codes are 35302 for the octanoic acid ester, and 128920 for the heptanoic acid ester. CAS Reg. Nos. are

1689-99-2 for the octanoic acid ester, and 56634-95-8 for the heptanoic acid ester.) The tolerances established in this final rule differ from these tolerances proposed by the registrant as the result of the review of residue data for bromoxynil and DBHA in cotton commodities submitted by the registrant after the petition was filed. In addition, the petition requested that the maximum allowable cotton acreage that can be treated annually with bromoxynil be increased from 400,000 acres to 1.3 million acres.

In the **Federal Register** of May 24, 1995 (60 FR 27414) (FRL–4953–9), EPA established a time-limited tolerance under section 408 of the FFDCA, 21 U.S.C. 346a, for residues of the herbicide bromoxynil, (3,5-dibromo-4-hydroxybenzonitrile) on cottonseed. This tolerance expired on April 1, 1997. The tolerance was established in response to a petition filed by the Rhone-Poulenc AG Company, P.O. Box 12014, 2 T.W. Alexander Drive, Research Triangle Park, NC 27709.

In the **Federal Register** of May 2, 1997 (62 FR 24065), EPA issued a proposed rule for establishment of tolerances on cotton commodities and poultry, eggs, and milk, and revision of tolerances on other livestock. In the **Federal Register** of June 18, 1997 (62 FR 33019), EPA issued a final rule for establishment of tolerances on cotton commodities and poultry, eggs, and milk, and revision of tolerances on other livestock. The tolerances for the cotton commodities expired on January 1, 1998.

I. Risk Assessment and Statutory Findings

New section 408(b)(2)(A)(i) of the FFDCA allows EPA to establish a tolerance (the legal limit for a pesticide chemical residue in or on a food) only if EPA determines that the tolerance is ''safe.'' Section 408(b)(2)(A)(ii) defines ''safe'' to mean that ''there is a reasonable certainty that no harm will result from aggregate exposure to the pesticide chemical residue, including all anticipated dietary exposures and all other exposures for which there is reliable information.'' This includes exposure through drinking water and in residential settings, but does not include occupational exposure. Section 408(b)(2)(C) requires EPA to give special consideration to exposure of infants and children to the pesticide chemical residue in establishing a tolerance and to ''ensure that there is a reasonable certainty that no harm will result to infants and children from aggregate exposure to the pesticide chemical residue. . . .''

EPA performs a number of analyses to determine the risks from aggregate exposure to pesticide residues. First, EPA determines the toxicity of pesticides based primarily on toxicological studies using laboratory animals. These studies address many adverse health effects, including (but not limited to) reproductive effects, developmental toxicity, toxicity to the nervous system, and carcinogenicity. Second, EPA examines exposure to the pesticide through the diet (e.g., food and drinking water) and through exposures that occur as a result of pesticide use in residential settings.

A. Toxicity

1. *Threshold and non-threshold effects.* For many animal studies, a dose response relationship can be determined, which provides a dose that causes adverse effects (threshold effects) and doses causing no observed effects (the ''no-observed effect level'' or ''NOEL'').

Once a study has been evaluated and the observed effects have been determined to be threshold effects, EPA generally divides the NOEL from the study with the lowest NOEL by an uncertainty factor (usually 100 or more) to determine the Reference Dose (RfD). The RfD is a level at or below which daily aggregate exposure over a lifetime will not pose appreciable risks to human health. An uncertainty factor (sometimes called a ''safety factor'') of 100 is commonly used since it is assumed that people may be up to 10 times more sensitive to pesticides than the test animals, and that one person or subgroup of the population (such as infants and children) could be up to 10 times more sensitive to a pesticide than another. In addition, EPA assesses the potential risks to infants and children based on the weight of the evidence of the toxicology studies and determines whether an additional uncertainty factor is warranted. Thus, an aggregate daily exposure to a pesticide residue at or below the RfD (expressed as 100% or less of the RfD) is generally considered acceptable by EPA. EPA generally uses the RfD to evaluate the chronic risks posed by pesticide exposure. For shorter term risks, EPA calculates a margin of exposure (MOE) by dividing the estimated human exposure into the NOEL from the appropriate animal study. Commonly, EPA finds MOEs lower than 100 to be unacceptable. This 100-fold MOE is based on the same rationale as the 100-fold uncertainty factor.

Lifetime feeding studies in two species of laboratory animals are conducted to screen pesticides for cancer effects. When evidence of increased cancer is noted in these studies, the Agency conducts a weight of the evidence review of all relevant toxicological data including short-term and mutagenicity studies and structure activity relationship. Once a pesticide has been classified as a potential human carcinogen, different types of risk assessments (e.g., linear low dose extrapolations or MOE calculation based on the appropriate NOEL) will be carried out based on the nature of the carcinogenic response and the Agency's knowledge of its mode of action.

2. *Differences in toxic effect due to exposure duration.* The toxicological effects of a pesticide can vary with different exposure durations. EPA considers the entire toxicity data base, and based on the effects seen for different durations and routes of exposure, determines which risk assessments should be done to assure that the public is adequately protected from any pesticide exposure scenario. Both short and long durations of exposure are always considered. Typically, risk assessments include ''acute,'' ''short-term,'' ''intermediate term,'' and ''chronic'' risks. These assessments are defined by the Agency as follows.

Acute risk, by the Agency's definition, results from 1-day consumption of food and water, and reflects toxicity which could be expressed following a single oral exposure to the pesticide residues. High end exposure to the pesticide residues from treated food and contaminated drinking water is typically assumed.

Short-term risk results from exposure to the pesticide for a period of 1-7 days, and therefore overlaps with the acute risk assessment. Historically, this risk assessment was intended to address primarily dermal and inhalation exposure which could result, for example, from residential pesticide applications. However, since enaction of the Food Quality Protection Act of 1996 (FQPA), this assessment has been expanded to include both dietary and non-dietary sources of exposure, and will typically consider exposure from food, water, and residential uses when reliable data are available. In this assessment, risks from average food and water exposure, and high-end residential exposure, are aggregated. High-end exposures from all three sources are not typically added because of the very low probability of this occurring in most cases, and because the other conservative assumptions built into the assessment assure adequate protection of public health. However, for cases in which high-end exposure

can reasonably be expected from multiple sources (e.g. frequent and widespread homeowner use in a specific geographical area), multiple high-end risks will be aggregated and presented as part of the comprehensive risk assessment/characterization. Since the toxicological endpoint considered in this assessment reflects exposure over a period of at least 7 days, an additional degree of conservatism is built into the assessment; i.e., the risk assessment nominally covers 1-7 days exposure, and the toxicological endpoint/NOEL is selected to be adequate for at least 7 days of exposure. (Toxicity results at lower levels when the dosing duration is increased.)

Intermediate-term risk results from exposure for 7 days to several months. This assessment is handled in a manner similar to the short-term risk assessment.

Chronic risk assessment describes risk which could result from several months to a lifetime of exposure. For this assessment, risks are aggregated considering average exposure from all sources for representative population subgroups including infants and children.

B. Aggregate Exposure

In examining aggregate exposure, FFDCA section 408 requires that EPA take into account available and reliable information concerning exposure from the pesticide residue in the food in question, residues in other foods for which there are tolerances, residues in groundwater or surface water that is consumed as drinking water, and other non-occupational exposures through pesticide use in gardens, lawns, or buildings (residential and other indoor uses). Dietary exposure to residues of a pesticide in a food commodity are estimated by multiplying the average daily consumption of the food forms of that commodity by the tolerance level or the anticipated pesticide residue level. The Theoretical Maximum Residue Contribution (TMRC) is an estimate of the level of residues consumed daily if each food item contained pesticide residues equal to the tolerance. In evaluating food exposures, EPA takes into account varying consumption patterns of major identifiable subgroups of consumers, including infants and children. The TMRC is a ''worst case'' estimate since it is based on the assumptions that food contains pesticide residues at the tolerance level and that 100% of the crop is treated by pesticides that have established tolerances. If the TMRC exceeds the RfD or poses a lifetime cancer risk that is greater than approximately one in a million, EPA attempts to derive a more accurate exposure estimate for the pesticide by evaluating additional types of information (anticipated residue data and/or percent of crop treated data) which show, generally, that pesticide residues in most foods when they are eaten are well below established tolerances.

II. Aggregate Risk Assessment and Determination of Safety

Consistent with section 408(b)(2)(D), EPA has reviewed the available scientific data and other relevant information in support of this action, EPA has sufficient data to assess the hazards of bromoxynil and to make a determination on aggregate exposure, consistent with section 408(b)(2), for tolerances for bromoxynil and DBHA on undelinted cottonseed at 1.5 ppm; cotton gin byproducts at 7.0 ppm; and cotton hulls at 5.0 ppm; in or on cattle, hogs, horses, goats, and sheep at 0.5 ppm in meat, 3.5 ppm in meat by-products (mbyp), and 1.0 ppm in fat; at 0.1 ppm in milk; at 0.05 ppm in eggs; at 0.05 ppm in poultry meat and fat; and at 0.3 ppm in poultry mbyp. EPA's assessment of the dietary exposures and risks associated with establishing the tolerances follows.

A. Toxicological Profile

EPA has evaluated the available toxicity data and considered its validity, completeness, and reliability as well as the relationship of the results of the studies to human risk. EPA has also considered available information concerning the variability of the sensitivities of major identifiable subgroups of consumers, including infants and children. The nature of the toxic effects caused by bromoxynil are discussed in the proposed rule (May 2, 1997, 62 FR 24065).

B. Toxicological Endpoints

The toxicological endpoints for bromoxynil are discussed in Unit IV. ''Dose Response Assessment'' of the proposed rule for last year's tolerance (May 2, 1997, 62 FR 24065).

C. Exposures and Risks

1. *From food and feed uses.* Tolerances have been established (40 CFR 180.324) for the residues of bromoxynil, in or on a variety of raw agricultural commodities. Tolerances for the residues of bromoxynil, resulting from the application of octanoic and heptanoic acid esters of bromoxynil to cotton, have been established in or on cattle, hogs, horses, goats, and sheep at 0.5 ppm in meat, 3.0 ppm in mbyp, and 1.0 ppm in fat. Tolerances for residues of bromoxynil, resulting from the application of octanoic and heptanoic acid esters of bromoxynil to cotton have been established at 0.1 ppm in milk; and at 0.05 ppm in eggs; at 0.05 ppm in poultry meat, mbyp, and fat. Risk assessments were conducted by EPA to assess dietary exposures and risks from bromoxynil as follows:

i. *Acute exposure and risk.* Acute dietary risk assessments are performed for a food-use pesticide if a toxicological study has indicated the possibility of an effect of concern occurring as a result of a one day or single exposure. A revised acute dietary risk assessment was conducted for bromoxynil. This revised acute dietary assessment differs from the assessment used for last year's tolerance as follows: (a) The results of a new cotton residue study were used to determine anticipated bromoxynil residues; (b) a probabilistic assessment submitted by the registrant was used. The acute assessment used a NOEL of 4 milligram/kilograms body weight/day (mg/kg bw/day) based on developmental effects with the population subgroup of concern being females ≥13 years old and a NOEL of 8 mg/kg bw/day based on systemic effects for all populations except females ≥13 years old. The acute analysis estimates the distribution of single-day exposures for the overall U.S. population and certain subgroups. The MOE is a measure of how closely the exposure comes to the NOEL and is calculated as a ratio of the NOEL to the exposure. The calculated MOE for acute risk of bromoxynil for the general U. S. Population is >58,000 and for females ≥13 years old is >24,000. For the most exposed subgroups, the calculated MOE for acute risk of bromoxynil is >32,000 for non-nursing infants, >36,000 for all infants, and >35,000 for children 1-6 years old. These figures are above the required MOE of 1,000 for females ≥13 years old and 100 for the general population and all other population subgroups, indicating that the potential for an adverse effect from a single day exposure is unlikely. The level of concern for the general U.S. population and all population subgroups except for females ≥13 years is based on interspecies extrapolation (10x) and intraspecies variability (10x). For females ≥13 years, an added factor of 10x is used pursuant to section 408(b)(2)(C) (See Unit II.E.b. of this document).

ii. *Chronic exposure and risk.* For chronic exposure to bromoxynil, the reference dose (0.015 mg/kg/day) is based upon a NOEL/LOEL of 1.5 mg/kg/day, from a 1-year canine study, with additional uncertainty factors applied

for intra- (10x) and interspecies (10x) variability.

A DRES chronic exposure analysis was conducted using anticipated residue levels for all registered commodities and livestock, and percent crop treated information to estimate dietary exposure for the general population and several population subgroups. The chronic analysis showed that for chronic effects other than cancer, for all population subgroups, less than 1% of the reference dose was consumed.

When EPA establishes, modifies, or leaves in effect a tolerance, section 408(b)(2)(E) authorizes EPA to use available data and information on the anticipated residue levels of pesticide residues in food and the actual levels of pesticide chemicals that have been measured in food. If EPA relies on such information, EPA must require that data be provided five years after the tolerance is established, modified, or left in effect, demonstrating that the levels in food are not above the levels anticipated. As required by section 408(b)(2)(E), EPA will issue a data call-in for information relating to anticipated residues to be submitted no later than five years from the date of issuance of this tolerance.

Section 408(b)(2)(F) states that the Agency may use data on the actual percent of food treated for assessing chronic dietary risk only if the Agency can make the following findings: (a) That the data used are reliable and provide a valid basis to show what percentage of the food derived from such crop is likely to contain such pesticide residue; (b) that the exposure estimate does not underestimate exposure for any significant subpopulation group; and (c) if data are available on pesticide use and food consumption in a particular area, the exposure estimate does not understate exposure for the population in such area. In addition, the Agency must provide for periodic evaluation of any estimates used. To provide for the periodic evaluation of the estimate of percent crop treated as required by the section 408(b)(2)(F), EPA may require registrants to submit data on percent crop treated.

The Agency used percent crop treated (PCT) information as follows. A routine chronic dietary exposure analysis for bromoxynil was based on 10% of the cotton crop treated, 10% of all cereal grain crops (wheat, corn, oats, barley, rye, sorghum) treated, 62% of the onion crop treated, 100% of the garlic crop treated, and 71% of peppermint and spearmint crop treated. PCT of 10% for cotton was based on the petitioner's request that the Agency permit up to 1.3 million acres of cotton to be treated annually with bromoxynil, which amounts to 10% of the cotton crop grown in the U.S. The registration of bromoxynil will restrict treatment of bromoxynil on cotton to no more than 1.3 million acres during 1998.

The Agency believes that the three conditions listed above have been met. With respect to (a), EPA finds that the PCT information described above for bromoxynil used on cotton is reliable and has a valid basis. The registration of bromoxynil will restrict treatment of bromoxynil on cotton to no more than 1.3 million acres during 1998. Before the petitioner can increase the treatment of greater than 1.3 million acres of cotton per year, permission from the Agency must be obtained. For crops other than cotton, the Agency has utilized the latest statistical data from RFF (Resources For The Future), Doane, and the U.S. Department of Agriculture (USDA), the best available sources for such information. As to (b) and (c), regional consumption information and consumption information for significant subpopulations is taken into account through EPA's computer-based model for evaluating the exposure of significant subpopulations including several regional groups. Use of this consumption information in EPA's risk assessment process ensures that EPA's exposure estimate does not understate exposure for any significant subpopulation group and allows the Agency to be reasonably certain that no regional population is exposed to residue levels higher than those estimated by the Agency. Other than the data available through national food consumption surveys, EPA does not have available information on the consumption of food bearing bromoxynil in a particular area.

The cancer risk from all food sources is 1.5 in a million if 10% of the cotton is treated. These risk estimates are based on anticipated residues and percent crop treated information.

2. *From drinking water.* Based on the chemical characteristics and monitoring data, bromoxynil residues are not expected to be found in ground water. For the action last year (June 18, 1997, 62 FR 33019), an analysis of surface water based on cotton use was conducted using the PRZM-EXAMS computer model (Pesticide Root Zone Model Version 2.3 plus Exposure Analysis Modeling System Version 2.94). The maximum or peak estimated concentration for bromoxynil was 12.3 parts per billion (ppb) and the maximum estimated long-term mean was 0.24 ppb (based on modeling using 36 years of weather data). These values represent what might be expected in a small water body near a cotton field highly prone to runoff. The maximum peak estimated concentration for bromoxynil from the model correlates with the highest value detected in the U.S. Geological Survey (USGS) monitoring data, 12.2 ppb, which has been corrected for an analytical recovery rate of 50%. For this action, the Agency has reevaluated the concentrations of bromoxynil in surface water to be used to assess risk associated with drinking water. EPA reviewed USGS national monitoring data and determined which of these sites were likely to have bromoxynil use. To estimate a reasonable high end exposure, EPA focussed on the calculated time weighted annual mean concentrations of bromoxynil at each of 11 USGS monitoring sites, which the EPA views as located in watersheds likely to have bromoxynil use. (These values were not corrected for the analytical recovery rate of 50%.) These time weighted annual mean concentrations ranged from 0.011 ppb to 0.18 ppb, with 10 out of the 11 sites with time weighted annual mean concentrations below 0.05 ppb. Six of the 10 sites had time weighted annual mean concentrations at or below 0.014 ppb. The highest annual time-weighted mean (0.18 ppb) was located in a relatively small watershed (approximately 100 square miles) and a relatively small water body, and the calculated annual mean value at this site was significantly influenced by the presence of a single high value (the highest value found in all of the available monitoring data). Based on this information, EPA believes that 0.05 ppb is a reasonable high end estimate for purposes of estimating drinking water exposure. However, EPA is imposing surface water monitoring requirements as a condition of registration to allow use of more precise estimates in the future.

i. *Acute exposure and risk.* Acute drinking water exposure was calculated by multiplying the estimated concentration of bromoxynil in surface water (12.3 ppb) by the estimated water consumption (2 liters for adults, 1 liter for children) and then dividing by body weight (70 kg for males, 60 kg for females, and 10 kg for children). Acute drinking water exposure is calculated to be 3.5×10^{-4} mg/kg/day for adult males and females, and 1.2×10^{-4} mg/kg/day for children. The MOE for drinking water for all three population subgroups is >10,000.

ii. *Chronic exposure and risk.* Chronic drinking water risk was calculated in the same way as acute risk, except that

the estimated mean concentrations of 0.24 ppb, 0.05 ppb, and 0.01 ppb were used. At 0.24 ppb, the highest of these concentrations, chronic drinking water exposure is calculated to be 2 x 10^{-5} mg/kg/day for children, 7 x 10^{-6} mg/kg/day for males, and 8 x 10^{-6} mg/kg/day for females. All of these exposures are <1% of the RfD of 0.015 mg/kg/day. The cancer risk (calculated based on a 70-year lifetime) is calculated to be 8 x 10^{-7} at a chronic water exposure concentration of 0.24 ppb, 2 x 10^{-7} at a concentration of 0.05 ppb, and 3 x 10^{-8} at a concentration of 0.01 ppb. The Agency has determined that a concentration of 0.05 ppb for bromoxynil is a reasonable high end of exposure for bromoxynil in surface water; therefore, the cancer risk from exposure to bromoxynil in drinking water is calculated at 2 x 10^{-7}.

EPA believes the estimates of bromoxynil exposure in water derived from the PRZM-EXAMS model, particularly the estimates pertaining to chronic exposure, are significantly overstated for several reasons. The PRZM-EXAMS model was designed to estimate exposure for ecological risk assessments and thus uses a scenario of a body of water approximating the size of a 1 hectare (2.5 acres) pond. This tends to overstate chronic drinking water exposure levels for the following reasons. First, surface water source drinking water generally comes from bodies of water that are substantially larger than a 1 hectare (2.5 acres) pond. Second, the modeled scenario also assumes that essentially the whole basin receives an application of the pesticide. Yet, in virtually all cases, basins large enough to support a drinking water facility will contain a substantial fraction of the area which does not receive the pesticide. Third, there is often at least some flow (in a river) or turn over (in a reservoir or lake) of the water so the persistence of the pesticide near the drinking water facility is usually overestimated. Fourth, even assuming a reservoir is directly adjacent to an agricultural field, the agricultural field may not be used to grow a crop on which the pesticide in question is registered for use. Fifth, the PRZM-EXAMS modeled scenario does not take into account reductions in residue-loading due to applications of less than the maximum application rate or no treatment of the crop at all (percent crop treated data).

3. *From non-dietary exposure.* Bromoxynil is currently not registered for use on any residential non-food sites.

4. *Cumulative exposure to substances with common mechanism of toxicity.* Section 408(b)(2)(D)(v) requires that, when considering whether to establish, modify, or revoke a tolerance, the Agency consider ''available information'' concerning the cumulative effects of a particular pesticide's residues and ''other substances that have a common mechanism of toxicity.'' The Agency believes that ''available information'' in this context might include not only toxicity, chemistry, and exposure data, but also scientific policies and methodologies for understanding common mechanisms of toxicity and conducting cumulative risk assessments. For most pesticides, although the Agency has some information in its files that may turn out to be helpful in eventually determining whether a pesticide shares a common mechanism of toxicity with any other substances, EPA does not at this time have the methodologies to resolve the complex scientific issues concerning common mechanism of toxicity in a meaningful way. EPA has begun a pilot process to study this issue further through the examination of particular classes of pesticides. The Agency hopes that the results of this pilot process will increase the Agency's scientific understanding of this question such that EPA will be able to develop and apply scientific principles for better determining which chemicals have a common mechanism of toxicity and evaluating the cumulative effects of such chemicals. The Agency anticipates, however, that even as its understanding of the science of common mechanisms increases, decisions on specific classes of chemicals will be heavily dependent on chemical specific data, much of which may not be presently available.

Although at present the Agency does not know how to apply the information in its files concerning common mechanism issues to most risk assessments, there are pesticides as to which the common mechanism issues can be resolved. These pesticides include pesticides that are toxicologically dissimilar to existing chemical substances (in which case the Agency can conclude that it is unlikely that a pesticide shares a common mechanism of activity with other substances) and pesticides that produce a common toxic metabolite (in which case common mechanism of activity will be assumed).

EPA does not have, at this time, available data to determine whether bromoxynil has a common mechanism of toxicity with other substances or how to include this pesticide in a cumulative risk assessment. Unlike other pesticides for which EPA has followed a cumulative risk approach based on a common mechanism of toxicity, bromoxynil does not appear to produce a toxic metabolite produced by other substances. For the purposes of this tolerance action, therefore, EPA has not assumed that bromoxynil has a common mechanism of toxicity with other substances.

C. Aggregate Risks and Determination of Safety for U.S. Population

1. *Acute risk.* The MOE for all dietary sources (food plus water) is >16,000 for the entire U.S. population, >11,000 for females ≥13 years old, and >5,000 for children 1-6 years old. These MOEs are greater than the levels of concern of 1,000 for females ≥13 years and 100 for all other population groups. Accordingly, EPA concludes that there is a reasonable certainty that no harm will result to the general population and major identifiable population subgroups from aggregate acute exposure to bromoxynil.

2. *Chronic risk.* Using the exposure assumptions described above, EPA has concluded that aggregate exposure to bromoxynil from food and drinking water will utilize <1% of the RfD for the U.S. population. EPA has also concluded that aggregate exposure to bromoxynil will utilize <1% of the RfD for the most highly exposed subpopulation, children 1-6 years old (discussed below). EPA generally has no concern for exposures below 100% of the RfD because the RfD represents the level at or below which daily aggregate dietary exposure over a lifetime will not pose appreciable risks to human health. Accordingly, EPA concludes that there is a reasonable certainty that no harm will result to the general population and major identifiable population subgroups from aggregate chronic exposure to bromoxynil.

D. Aggregate Cancer Risk for U.S. Population

The aggregate cancer risk for the U.S. population calculated for use of bromoxynil is 1.7 x 10^{-6}. EPA believes that a risk estimate of this level generally represents a negligible risk, as EPA has traditionally applied that concept. EPA has commonly referred to a negligible risk as one that is at or below 1 in 1 million (1 x 10^{-6}). Quantitative cancer risk assessment is not a precise science. There are a significant number of uncertainties in both the toxicology used to derive the cancer potency of a substance and in the data used to measure and calculate exposure. Thus, EPA generally does not attach great significance to numerical estimates that differ by approximately a factor of 2. Therefore, EPA considers the

carcinogenic risk from bromoxynil to be negligible within the meaning of that standard as it has been traditionally applied by EPA. Accordingly, EPA concludes that there is a reasonable certainty that no harm will result to the general population and major identifiable population subgroups from aggregate exposure to bromoxynil. Specific risks to infants and children other than cancer are discussed below.

E. Aggregate Risks and Determination of Safety for Infants and Children

1. *Safety factor for infants and children*— i. *In general.* In assessing the potential for additional sensitivity of infants and children to residues of bromoxynil, EPA considered all available developmental and reproductive toxicity data. A total of 12 developmental and 3 reproductive toxicity studies were available for review. These include oral prenatal developmental toxicity studies (four in rats, two in rabbits, and one in mice with the phenol; one in rats with the octanoate), dermal prenatal developmental toxicity studies (one each in rats and rabbits with both the phenol and the octanoate), and dietary two-generation reproduction studies in rats (two with the phenol; one with the octanoate). The developmental toxicity studies are designed to evaluate adverse effects on the developing organism resulting from maternal pesticide exposure gestation. Reproduction studies provide information relating to effects from exposure to the pesticide on the reproductive capability of mating animals and data on systemic toxicity.

FFDCA section 408 provides that EPA shall apply an additional tenfold margin of safety for infants and children in the case of threshold effects to account for pre-and post-natal toxicity and the completeness of the database unless EPA determines that a different margin of safety will be safe for infants and children. Margins of safety are incorporated into EPA risk assessments either directly through use of a MOE analysis or through using uncertainty (safety) factors in calculating a dose level that poses no appreciable risk to humans. EPA believes that reliable data support using the standard uncertainty factor (usually 100 for combined inter- and intra-species variability)) and not the additional tenfold MOE/uncertainty factor when EPA has a complete data base under existing guidelines and when the severity of the effect in infants or children or the potency or unusual toxic properties of a compound do not raise concerns regarding the adequacy of the standard MOE/safety factor.

ii. *Analysis.* Developmental toxicity was observed, following *in utero* exposure to bromoxynil, in multiple studies, by two routes of exposure, and in three species. The induction of supernumerary ribs was shown to be the most sensitive indicator of developmental toxicity in fetal rats, mice, and (in certain studies) rabbits. In EPA's 1997 tolerance action concerning bromoxynil (62 FR 33019, June 18, 1997), EPA concluded that the children's safety factor was not necessary to protect the safety of infants and children. That decision rested on the view that, given the large number of studies available on bromoxynil, EPA had a high degree of certainty regarding the level at which effects would occur in experimental animals. Since that action, EPA revisited the children's safety factor decision and concluded that the safety factor should be retained. This revised decision is based on EPA's conclusion that the standard 100-fold safety factor may not be adequate to protect the safety of infants and children given the clear showing of increased susceptibility of fetuses, the steep dose response curve, and the demonstrated severe developmental effects at doses above the LOEL. Nevertheless, EPA's decision at this time remains tentative due to the fact that EPA has only recently sought external science review of its approach to the children's safety factor and also instituted an internal reexamination process. Given the toxicological factors noted above, EPA is unwilling to make safety determinations regarding this pesticide without using the additional tenfold safety factor.

EPA believes that the population of concern for which the safety factor should be retained is the developing fetus and the endpoint of concern is supernumerary ribs. This endpoint, a developmental anomaly, results from *in utero* exposure. Although some systems in infants and children continue developing, it is unlikely that supernumerary ribs, even though observed across multiple species, would result from postnatal exposure. Since the acute dietary endpoint for females ≥13 years old is based on developmental effects, it was determined that the 10-fold safety factor should be applied to the acute risk assessment for females ≥13 years old (the population subgroup that is relevant to *in utero* exposure), but is not needed for children and infants. A 10-fold factor safety factor applied to females ≥13 years old will provide additional protection for infants and children and ensure a reasonable certainty of no harm to this sensitive subpopulation.

2. *Acute risk.* The MOE of >5,000 for children 1-6 years old, the most highly exposed subpopulation, is greater than the level of concern of 100. For females ≥13 years old, the population subgroup that is most relevant to the development of *in utero* exposure, the MOE of 11,000 is greater than the level of concern of 1000. Therefore acute risk for children does not trigger any concerns.

3. *Chronic risk.* Using the exposure assumptions described above, EPA has concluded that aggregate exposure to bromoxynil from food will utilize <1% of the RfD for infants and children. EPA generally has no concern for exposures below 100% of the RfD because the RfD represents the level at or below which daily aggregate dietary exposure over a lifetime will not pose appreciable risks to human health. Therefore, the Agency concludes that there is a reasonable certainty of no harm to infants and children as a result of chronic dietary exposure to bromoxynil.

III. Other Considerations

A. Metabolism In Plants and Animals

The nature (metabolism) of bromoxynil residues in plants and livestock is adequately understood for the purposes of these tolerances. In all the plant and animal (poultry and ruminants) metabolism studies submitted, the residues of concern were parent bromoxynil and the metabolite DBHA. The tolerances for cotton commodities and livestock are expressed in terms of bromoxynil and DBHA.

Pending receipt of additional metabolism data for DBHA in livestock, the Agency has assumed that DBHA is of equal toxicity to the parent and translates proportionately to the parent for livestock commodities. The Agency believes these assumptions are adequately protective for purposes of these tolerances.

B. Analytical Enforcement Methodology

Adequate analytical methodology is available for data collection and tolerance enforcement for bromoxynil *per se* in plants. Method I in PAM, Vol. II, is a GLC/MCD that has undergone a successful EPA method validation on wheat grain. This method involves alkaline hydrolysis in methanolic KOH to convert residues to bromoxynil, cleanup by liquid-liquid partitioning, methylation using diazomethane, further cleanup on a Florisil column, and determination by GLC/MCD. Method Ia is the same method, but uses GC/ECD for determination of methylated bromoxynil.

The analytical method ''Bromoxynil: Method of Analysis for Bromoxynil and its Metabolite, 3,5-Dibromo-4-hydroxybenzoic Acid in Cottonseed, Gin Trash, and Seed Processed Fractions using GC-MSD.'' (Method RES9603) has been the subject of an Independent Laboratory Validation (ILV) and an Agency Petition Method Validation (PMV). The method validation data are being reviewed by the Agency; approval of the method for enforcement purposes is anticipated.

Method A is a GC/MCD or ECD method for the analysis of bromoxynil *per se* in livestock tissues and is essentially the same as Method I. Method B is a GC/ECD method that is also similar to Method I, with modifications to the cleanup procedures. A method for DBHA in animal commodities has been developed and is currently in the process of review and validation by the Agency.

C. Magnitude of Residues

In the petition for these tolerances, the registrant requested that 40 CFR 180.324 be amended by establishing tolerances for residues of the herbicide bromoxynil and its metabolite DBHA on cotton at 7 ppm for undelinted cottonseed, 50 ppm for cotton gin byproducts, and 21 ppm for cotton hulls. These proposed tolerances are the same as those issued in the June 18, 1997 final rule (62 FR 33019). Immediately prior to establishing these tolerances, the registrant reduced the maximum label rate as a result of Agency risk concerns. The tolerances were determined by extrapolating from residue studies conducted at the former maximum label rate (4.5 lb ai/A). Following the submission of the tolerance petition, the registrant submitted residue data for bromoxynil and DBHA in cotton commodities at the revised maximum application rate of 3 applications at 0.5 lb ai/A each for a total of 1.5 lb ai/A. These data show that bromoxynil and DBHA residues in cotton commodities are lower than the values determined for the June 18, 1997 final rule. Based on the new residue data, tolerances for bromoxynil and DBHA in cotton commodities are being changed to 7.0 ppm in cotton gin byproducts, 5.0 ppm in cotton hulls, and 1.5 ppm in undelinted cottonseed.

In the June 18, 1997 final rule, tolerances for livestock commodities (including milk and eggs) were expressed as bromoxynil per se only; the Agency concluded that measurement of bromoxynil per se in livestock commodities could serve as a marker to indicate the amount of DBHA present in livestock. After further consideration, the Agency has determined that measurement of bromoxynil per se in livestock is not adequate to determine the amount of DBHA present. Therefore, in this action, tolerances are expressed as bromoxynil and DBHA instead of only as bromoxynil per se in livestock.

Tolerances for ruminant commodities (meat, fat, and meat by products) were recalculated since issuing the June 18, 1997 final rule due to new information. First, new residue data for bromoxynil and DBHA in cotton commodities were used to determine expected maximum theoretical dietary exposure to bromoxynil and DBHA via ingestion of cotton commodities. Second, maximum theoretical residues in livestock commodities were recalculated based on a revision in the dosing levels used in livestock feeding studies. Doses were previously calculated in terms of bromoxynil octanoate; however, since tolerances in RACs (raw agricultural commodities) are for bromoxynil per se, doses were recalculated as such. Finally, changes were made to the relative contributions of feed items in the diet as a result of grazing restrictions for grass, and information provided by the registrant on the amount of cotton gin trash in beef and dairy cattle diets. These changes did not affect tolerances for residues in milk, eggs, or meat and fat of ruminants and poultry; however, the tolerances for residues in meat by-products increased to 3.5 ppm for ruminants and to 0.3 ppm for poultry.

D. International Residue Limits

There are no established or proposed Codex MRLs for bromoxynil residues.

E. Rotational Crop Restrictions

Required additional limited field rotational crop studies have not been submitted to the Agency; acceptable studies previously submitted in support of reregistration reflect a maximum seasonal and single application rate of 0.5 lb ai/A, but the use on cotton constitutes a maximum seasonal application rate of 1.5 lb ai/A. Pending receipt of these studies registered labels must restrict rotation of cotton fields treated at a rate of greater than 0.5 lb ai/A/season to cotton.

IV. Conclusion

Therefore, tolerances are established for bromoxynil and DBHA in undelinted cottonseed at 1.5 ppm, cotton gin byproducts at 7.0 ppm, and cotton hulls at 5.0 ppm. In addition, this document establishes tolerances for the residues of bromoxynil and DBHA, resulting from the application of octanoic and heptanoic acid esters of bromoxynil to cotton, in or on cattle, hogs, horses, goats, and sheep to 0.5 ppm in meat, 3.5 ppm in mbyp, and 1.0 ppm in fat. Further, this document establishes tolerances for residues of bromoxynil and DBHA, resulting from the application of octanoic and heptanoic acid esters of bromoxynil to cotton, at 0.1 ppm in milk; at 0.05 ppm in eggs; at 0.05 ppm in poultry meat and fat; and at 0.3 ppm in poultry mbyp.

V. Objections and Hearing Requests

The new FFDCA section 408(g) provides essentially the same process for persons to ''object'' to a tolerance regulation issued by EPA under new section 408(e) and (l)(6) as was provided in the old section 408 and in section 409. However, the period for filing objections is 60 days, rather than 30 days. EPA currently has procedural regulations which govern the submission of objections and hearing requests. These regulations will require some modification to reflect the new law. However, until those modifications can be made, EPA will continue to use those procedural regulations with appropriate adjustments to reflect the new law.

Any person may, by July 13, 1998, file written objections to any aspect of this regulation and may also request a hearing on those objections. Objections and hearing requests must be filed with the Hearing Clerk, at the address given above (40 CFR 178.20). A copy of the objections and/or hearing requests filed with the Hearing Clerk should be submitted to the OPP docket for this rulemaking. The objections submitted must specify the provisions of the regulation deemed objectionable and the grounds for the objections (40 CFR 178.25). Each objection must be accompanied by the fee prescribed by 40 CFR 180.33(i). If a hearing is requested, the objections must include a statement of the factual issues on which a hearing is requested, the requestor's contentions on such issues, and a summary of any evidence relied upon by the requestor (40 CFR 178.27). A request for a hearing will be granted if the Administrator determines that the material submitted shows the following: There is genuine and substantial issue of fact; there is a reasonable possibility that available evidence identified by the requestor would, if established, resolve one or more of such issues in favor of the requestor, taking into account uncontested claims or facts to the contrary; and resolution of the factual issues in the manner sought by the requestor would be adequate to justify the action requested (40 CFR 178.32).

Information submitted in connection with an objection or hearing request may be claimed confidential by marking any part or all of that information as CBI. Information so marked will not be disclosed except in accordance with procedures set forth in 40 CFR part 2. A copy of the information that does not contain CBI must be submitted for inclusion in the public record. Information not marked confidential may be disclosed publicly by EPA without prior notice.

VI. Public Docket

EPA has established a record for this rulemaking under docket control number [OPP–300661] (including any comments and data submitted electronically). A public version of this record, including printed, paper versions of electronic comments, which does not include any information claimed as CBI, is available for inspection from 8:30 a.m. to 4 p.m., Monday through Friday, excluding legal holidays. The public record is located in Room 119 of the Public Information and Records Integrity Branch, Information Resources and Services Division (7502C), Office of Pesticide Programs, Environmental Protection Agency, Crystal Mall #2, 1921 Jefferson Davis Hwy., Arlington, VA.

Electronic comments may be sent directly to EPA at:

opp-docket@epamail.epa.gov.

Electronic comments must be submitted as an ASCII file avoiding the use of special characters and any form of encryption.

The official record for this rulemaking, as well as the public version, as described above will be kept in paper form. Accordingly, EPA will transfer any copies of objections and hearing requests received electronically into printed, paper form as they are received and will place the paper copies in the official rulemaking record which will also include all comments submitted directly in writing. The official rulemaking record is the paper record maintained at the Virginia address in ''ADDRESSES'' at the beginning of this document.

VII. Regulatory Assessment Requirements

This final rule establishes tolerances under FFDCA section 408(d) in response to a petition submitted to the Agency. The Office of Management and Budget (OMB) has exempted these types of actions from review under Executive Order 12866, entitled Regulatory Planning and Review (58 FR 51735, October 4, 1993). This final rule does not contain any information collections subject to OMB approval under the Paperwork Reduction Act (PRA), 44 U.S.C. 3501 *et seq.*, or impose any enforceable duty or contain any unfunded mandate as described under Title II of the Unfunded Mandates Reform Act of 1995 (UMRA) (Pub. L. 104-4). Nor does it require any prior consultation as specified by Executive Order 12875, entitled Enhancing the Intergovernmental Partnership (58 FR 58093, October 28, 1993), or special considerations as required by Executive Order 12898, entitled Federal Actions to Address Environmental Justice in Minority Populations and Low-Income Populations (59 FR 7629, February 16, 1994), or require OMB review in accordance with Executive Order 13045, entitled Protection of Children from Environmental Health Risks and Safety Risks (62 FR 1985, April 23, 1997).

In addition, since these tolerances and exemptions that are established on the basis of a petition under FFDCA section 408(d), such as the tolerances in this final rule, do not require the issuance of a proposed rule, the requirements of the Regulatory Flexibility Act (RFA) (5 U.S.C. 601 *et seq.*) do not apply. Nevertheless, the Agency has previously assessed whether establishing tolerances, exemptions from tolerances, raising tolerance levels or expanding exemptions might adversely impact small entities and concluded, as a generic matter, that there is no adverse economic impact. The factual basis for the Agency's generic certification for tolerance actions published on May 4, 1981 (46 FR 24950) and was provided to the Chief Counsel for Advocacy of the Small Business Administration.

VIII. Submission to Congress and the General Accounting Office

Under 5 U.S.C. 801(a)(1)(A), as added by the Small Business Regulatory Enforcement Fairness Act of 1996, the Agency has submitted a report containing this rule and other required information to the U.S. Senate, the U.S. House of Representatives, and the Comptroller General of the General Accounting Office prior to publication of this rule in today's **Federal Register**. This is not a ''major rule'' as defined by 5 U.S.C. 804(2).

List of Subjects in 40 CFR Part 180

Environmental protection, Administrative practice and procedure, Agricultural commodities, Pesticides and pests, Reporting and recordkeeping requirements.

Dated: May 6, 1998.

James Jones,

Director, Registration Division, Office of Pesticide Programs.

Therefore, 40 CFR chapter I is amended as follows:

PART 180— [AMENDED]

1. The authority citation for part 180 continues to read as follows:

Authority: 21 U.S.C. 346a and 371.

2. In § 180.324, paragraph (a) is revised to read as follows:

§ 180.324 Bromoxynil; tolerances for residues.

(a) *General.* (1) Tolerances are established for residues of the herbicide bromoxynil (3,5-dibromo-4-hydroxybenzonitrile) resulting from application of its octanoic and/or heptanoic acid ester in or on the following commodities:

Commodity	Parts per million
Alfalfa, seeding	0.1 ppm
Barley, grain	0.1 ppm
Barley, straw	0.1 ppm
Corn, fodder (dry)	0.1 ppm
Corn, fodder (green)	0.1 ppm
Corn, fodder, field (dry)	0.1 ppm
Corn, fodder, field (green)	0.1 ppm
Corn, grain	0.1 ppm
Corn, grain, field	0.1 ppm
Flaxseed	0.1 ppm
Flax straw	0.1 ppm
Garlic	0.1 ppm
Grass, canary, annual, seed.	0.1 ppm
Grass, canary, annual, straw.	0.1 ppm
Mint hay	0.1 ppm
Oats, forage, green	0.1 ppm
Oats, grain	0.1 ppm
Oats, straw	0.1 ppm
Onions (dry bulb)	0.1 ppm
Rye, forage, green	0.1 ppm
Rye, grain	0.1 ppm
Rye, straw	0.1 ppm
Sorghum, fodder	0.1 ppm
Sorghum, forage	0.1 ppm
Sorghum, grain	0.1 ppm
Wheat, forage, green	0.1 ppm
Wheat, grain	0.1 ppm
Wheat, straw	0.1 ppm

(2) Tolerances are established for residues of the herbicide bromoxynil (3,5-dibromo-4-hydroxybenzonitrile) and its metabolite 3,5-dibromo-4-hydroxybenzoic acid (DBHA) resulting from application of its octanoic and/or heptanoic acid ester in or on the following commodities:

Commodity	Parts per million
Cattle, fat	1 ppm
Cattle, mbyp	3.5 ppm
Cattle, meat	0.5 ppm
Cotton gin byproducts	7.0 ppm
Cotton, hulls	5.0 ppm
Cotton, undelinted seed	1.5 ppm
Eggs	0.05 ppm
Goats, fat	1 ppm
Goats, mbyp	3.5 ppm
Goats, meat	0.5 ppm
Hogs, fat	1 ppm
Hogs, mbyp	3.5 ppm
Hogs, meat	0.5 ppm
Horses, fat	1 ppm
Horses, mbyp	3.5 ppm
Horses, meat	0.5 ppm
Milk	0.1 ppm
Poultry, fat	0.05 ppm
Poultry, mbyp	0.3 ppm
Poultry, meat	0.05 ppm
Sheep, fat	1 ppm
Sheep, mbyp	3.5 ppm
Sheep, meat	0.5 ppm

* * * * *

[FR Doc. 98–12639 Filed 5–8–98; 9:42 am]

BILLING CODE 6560–50–F

ENVIRONMENTAL PROTECTION AGENCY

40 CFR Part 180

[OPP–300660; FRL–5790–5]

RIN 2070–AB78

Diflubenzuron; Temporary Pesticide Tolerance

AGENCY: Environmental Protection Agency (EPA).

ACTION: Final rule.

SUMMARY: This regulation establishes a temporary tolerance for residues of the insecticide diflubenzuron (N-[[4-chlorophenyl)amino]-carbonyl]-2,6-difluorobenzamide) and metabolites convertible to p-chloroaniline expressed as diflubenzuron on rice grain at 0.01 ppm. Uniroyal Chemical Company, Inc. submitted a petition to EPA under the Federal Food, Drug, and Cosmetic Act (FFDCA), as amended by the Food Quality Protection Act of 1996 requesting this temporary tolerance in association with an Experimental Use Permit (EUP) under the Federal Insecticide, Fungicide, and Rodenticide Act (FIFRA).

DATES: This regulation is effective May 13, 1998. Objections and requests for hearings must be received by EPA on or before July 13, 1998.

ADDRESSES: Written objections and hearing requests, identified by the docket control number, [OPP–300660], must be submitted to: Hearing Clerk (1900), Environmental Protection Agency, Rm. M3708, 401 M St., SW., Washington, DC 20460. Fees accompanying objections and hearing requests shall be labeled ''Tolerance Petition Fees'' and forwarded to: EPA Headquarters Accounting Operations Branch, OPP (Tolerance Fees), P.O. Box 360277M, Pittsburgh, PA 15251. A copy of any objections and hearing requests filed with the Hearing Clerk identified by the docket control number, [OPP–300660], must also be submitted to: Public Information and Records Integrity Branch, Information Resources and Services Division (7506C), Office of Pesticide Programs, Environmental Protection Agency, 401 M St., SW., Washington, DC 20460. In person, bring a copy of objections and hearing requests to Rm. 1132, CM #2, 1921 Jefferson Davis Hwy., Arlington, VA.

A copy of objections and hearing requests filed with the Hearing Clerk may also be submitted electronically by sending electronic mail (e-mail) to: opp-docket@epamail.epa.gov. Copies of objections and hearing requests must be submitted as an ASCII file avoiding the use of special characters and any form of encryption. Copies of objections and hearing requests will also be accepted on disks in WordPerfect 5.1 file format or ASCII file format. All copies of objections and hearing requests in electronic form must be identified by the docket control number [OPP–300660]. No Confidential Business Information (CBI) should be submitted through e-mail. Electronic copies of objections and hearing requests on this rule may be filed online at many Federal Depository Libraries.

FOR FURTHER INFORMATION CONTACT: By mail: Paul Schroeder, Registration Division (7505C), Office of Pesticide Programs, Environmental Protection Agency, 401 M St., SW., Washington, DC 20460. Office location, telephone number, and e-mail address: Crystal Mall #2, 1921 Jefferson Davis Hwy., Arlington, VA, (703) 305-6602, e-mail: schroeder.paul@epamail.epa.gov.

SUPPLEMENTARY INFORMATION: In the **Federal Register** of February 25, 1998 (63 FR 9528) (FRL–5775–3), EPA issued a notice pursuant to section 408 of the Federal Food, Drug, and Cosmetic Act (FFDCA), 21 U.S.C. 346a(e) announcing the filing of a pesticide petition (PP 6G4771) from Uniroyal Chemical Company, Inc., Bethany, CT proposing to amend 40 CFR part 180 by establishing a tolerance for residues of the insect growth regulator, diflubenzuron and metabolites convertible to p-chloroaniline, expressed as diflubenzuron in or on rice at 0.02 parts per million (ppm) and rice straw at 0.8 ppm. The notice included a summary of the petition prepared by Uniroyal Chemical Company, Inc., the registrant. In the **Federal Register** of March 9, 1998 (63 FR 11445) (FRL–5777-8), a clarification of the notice of filing was published explaining that Uniroyal had submitted two petitions, 6G4771, for the establishment of a temporary tolerance in or on rice at 0.01 ppm in association with a 3,000 acre EUP, and 8F4925, to amend 40 CFR 180.377 to include a tolerance for residues of the insect growth regulator, diflubenzuron and metabolites convertible to p-chloroaniline, expressed as diflubenzuron in or on rice at 0.02 parts per million (ppm) and rice straw at 0.8 ppm. There were no comments received in response to the notice of filing or the clarification.

I. Risk Assessment and Statutory Findings

EPA establishes maximum legal levels (tolerances) for pesticide residues on food under section 408 of FFDCA. EPA performs a number of analyses to determine the risk from aggregate exposure to pesticide residues. For further discussion of the regulatory requirements of section 408 and a complete description of the risk assessment process, see the Final Rule on Bifenthrin Pesticide Tolerances (62 FR 62961, November 26, 1997) (FRL–5754–7).

II. Aggregate Risk Assessment and Determination of Safety

Consistent with section 408(b)(2)(D), EPA has reviewed the available scientific data and other relevant information in support of this action, EPA has sufficient data to assess the hazards of residues of the insecticide diflubenzuron (N-[[4-chlorophenyl)amino]-carbonyl]-2,6-difluorobenzamide) and metabolites convertible to p-chloroaniline expressed as diflubenzuron on rice grain at 0.01, and to make a determination on aggregate exposure, consistent with section 408(b)(2), for a tolerance for residues of the insecticide diflubenzuron (N-[[4-chlorophenyl)amino]-carbonyl]-2,6-difluorobenzamide) and metabolites convertible to p-chloroaniline expressed as diflubenzuron on rice grain at 0.01. EPA's assessment of the dietary exposures and risks associated with establishing the tolerance follows.

A. Toxicological Profile

EPA has evaluated the available toxicity data and considered its validity, completeness, and reliability as well as the relationship of the results of the studies to human risk. EPA has also considered available information concerning the variability of the sensitivities of major identifiable subgroups of consumers, including infants and children. The nature of the toxic effects caused by diflubenzuron (N-[[4-chlorophenyl)amino]-carbonyl]-2,6-difluorobenzamide) and metabolites convertible to p-chloroaniline expressed as diflubenzuron have been fully described in the Reregistration Eligibility Decision (RED) document (EPA 738-R-97-008, August 1997), a copy of which is in the public docket.

B. Toxicological Endpoints

1. *Acute toxicity*. A risk assessment for acute dietary exposure (1 day) is not necessary. One day single dose oral studies in rats and mice indicated only marginal effects on methemoglobin levels at a dose level of 10,000 milligrams/kilograms (mg/kg) of diflubenzuron (25% wettable powder formulation). Sulfhemoglobin levels and Heinz bodies were not affected.

2. *Short- and intermediate-term toxicity*. The toxicology endpoint for short-term occupational or residential exposure (1 to 7 days) is sulfhemoglobinemia observed in the 14–day subchronic oral study in mice dosed with technical grade diflubenzuron. The no observed effect level (NOEL) in this study was 40 mg/kg/day and the lowest effect level (LEL) was 200 mg/kg/day.

The toxicology endpoint for intermediate-term occupational or residential exposure (1 week to several months) is methemoglobinemia observed in the 13-week subchronic feeding study in dogs. For the purpose of risk assessments, the NOEL of 1.64 mg/kg/day in this study should be considered to be 2 mg/kg/day so as to be consistent with the NOEL of 2 mg/kg/day in the chronic study used to calculate the RfD.

The LEL in this study was 6.24 mg/kg/day. There were no acceptable dermal absorption studies available. However, a dermal absorption rate was selected from an acceptable dermal absorption submitted to the Agency on June 25, 1996. From that study, a dermal absorption rate of 0.50% for exposures of 1 to 10 hours was determined for use in an occupational exposure assessment.

3. *Chronic toxicity*. The RfD was determined to be 0.02 mg/kg/day and is based on the NOEL of 2.0 mg/kg/day in the 52–week chronic oral study in dogs. Increases in methemoglobin and sulfhemoglobin were observed at the next higher dose level of 10.0 mg/kg/day. An uncertainty factor of 100 was applied to account for the interspecies extrapolation and intraspecies variability. Diflubenzuron has been reviewed by the FAO/WHO joint committee on pesticide residues and an Acceptable Daily Intake (ADI) of 0.02 mg/kg/day was established in 1985. The ADI was based upon the one-year oral toxicity study in dogs with a NOEL of 2.0 mg/kg/day. A safety factor of 100 was applied to account for the interspecies extrapolation and intraspecies variability.

4. *Carcinogenicity*. Based on the available evidence, which included adequate carcinogenicity studies in rats and mice and a battery of negative mutagenicity studies, diflubenzuron *per se* has been classified as Group E (evidence of non-carcinogenicity for humans). However, p-chloroaniline (PCA), a metabolite of diflubenzuron, was classified as a Group B2 carcinogen (probable human carcinogen). The classification for PCA was based on the results of a National Toxicology Program (NTP) study reported in July 1989 in which p-chloroaniline hydrochloride was administered by gavage to rats and mice for 2 years. In rats, clearly increased incidences of uncommon sarcomas (fibrosarcomas, hemangiosarcomas and/or osteosarcomas) of the spleen were observed in males. In females, two additional sarcomas of the spleen were also found. Pheochromocytomas of the adrenal gland may also have been associated with the test material in male and female rats. In mice, increased incidences of hepatocellular neoplasms in the liver and of hemangiosarcomas in the spleen and/or liver were observed in males. In females, no evidence of carcinogenic activity was observed. The results of several mutagenicity studies on PCA were also included in the same NTP report. PCA was mutagenic in Salmonella strains TA98 and TA100 with metabolic activation. Gene mutations were induced by PCA in cultured mouse lymphoma cells with and without metabolic activation. In cultured Chinese hamster ovary (CHO) cells, treatment with PCA produced significant increases in sister chromatid exchanges (SCEs) with and without metabolic activation. Chromosomal aberrations were also significantly increased in CHO cells in the presence of metabolic activation.

For the purpose of calculating dietary risk assessments, the following procedure was used:

a. P-chlorophenylurea (CPU) and p-chloroacetanilide (PCAA), additional metabolites of diflubenzuron that are closely related to PCA and for which there are no adequate carcinogenicity data available, should be considered to be potentially carcinogenic and to have the same carcinogenic potency (Q1*) as PCA.

b. The sum of PCA, CPU and PCAA residues in ingested food should be used to estimate the dietary exposure of humans to the carcinogenic metabolites of diflubenzuron.

c. In addition to ingested residues of these three metabolites, amounts of PCA, CPU, and/or PCAA formed *in vivo* following ingestion of diflubenzuron should also be included when estimating the total exposure of humans to the carcinogenic metabolites of diflubenzuron. The *in vivo* conversion of ingested diflubenzuron to PCA and/or CPU was estimated to be 2.0%, based on data in the rat metabolism study.

The Q1* (estimated unit risk) for PCA, based upon spleen sarcoma rates in male rats, was calculated to be 6.38 x 10^{-2} $(mg/kg/day)^{-1}$ in human equivalents.

Where no PCA, CPU, and/or PCAA are present, the toxicological endpoint for diflubenzuron *per se* should be used for risk assessments.

Regarding potential carcinogenic risks to humans resulting from dermal and/or inhalation exposures to PCA, CPU, and/or PCAA occurring during occupational or residential exposures to diflubenzuron, it has been determined that these risks are likely to be negligible since exposure to these metabolites is not anticipated. Only in the event that direct exposure to one or more of these metabolites of diflubenzuron is demonstrated would it be necessary to perform such risk assessments.

It has been determined that PCAA does not occur in animal or plant tissues in significant amounts.

5. *Special sensitivity to infants and children*. In assessing the potential for additional sensitivity of infants and children to residues of diflubenzuron, EPA considered data from developmental toxicity studies in the rat and rabbit and a 2-generation reproductive toxicity study in the rat. Developmental toxicity studies are designed to evaluate adverse effects on the developing fetus resulting from maternal pesticide exposure during gestation. Reproductive toxicity studies provide information relating to pre- and post-natal effects from exposure to the pesticide, information on the reproductive capability of mating animals, and data on systemic toxicity.

FFDCA section 408 provides that EPA shall apply an additional 10-fold margin of safety for infants and children in the case of threshold effects to account for pre- and post-natal toxicity and the completeness of the data base unless EPA determines that a different margin of safety will be safe for infants and children. Margins of safety are incorporated into EPA risk assessments either directly through use of a margin of exposure analysis or through using uncertainty (safety) factors in calculating a dose level that poses no appreciable risk to humans. In either case, EPA generally defines the level of appreciable risk as exposure that is greater than 1/100 of the no observed effect level in the animal study appropriate to the particular risk assessment. This 100-fold uncertainty (safety) factor/margin of exposure (safety) is designed to account for inter-species extrapolation and intra-species variability. EPA believes that reliable data support using the 100-fold margin/factor, rather than the 1,000-fold margin/factor, when EPA has a complete data base under existing guidelines, and when the severity of the effect in infants or children, the potency or unusual toxic properties of a compound, or the quality of the exposure data do not raise concerns regarding the adequacy of the standard margin/factor.

a. *Developmental toxicity studies*—i. *Rats*. In the developmental study in rats, the maternal (systemic) NOEL was 1,000.0 mg/kg/day [HDT]. The developmental (fetal) NOEL was 1,000.0 mg/kg/day, [HDT].

ii. *Rabbits*. In the developmental toxicity study in rabbits, the maternal (systemic) NOEL was 1,000.0 mg/kg/day, [HDT]. The developmental (pup) NOEL was 1,000.0 mg/kg/day, [HDT].

b. *Reproductive toxicity studies*. In the 2-generation reproductive toxicity study in rats, the maternal (systemic) NOEL was <36 males/<42 females mg/kg/day, [LDT] based on hematological effects at all dose levels tested. The reproductive (pup) NOEL was 427.0 mg/kg/day, based on decreases in the F-1 pup weight at the LEL of 2,454.0 mg/kg/day [HDT].

c. *Pre- and post-natal sensitivity*. The toxicological data base for evaluating pre- and post-natal toxicity for diflubenzuron is complete with respect to current data requirements. There is an ongoing review of these data with respect to the requirements of the Food Quality Protection Act. However, a preliminary decision, for purposes of this temporary tolerance, is that there is no extra sensitivity for pre- or post-natal effects and that there are reliable data to support use of a 100-fold margin of exposure/uncertainty factor, to protect infants and children.

C. Exposures and Risks

1. *From food and feed uses*. Tolerances have been established (40 CFR 180.377) for residues of diflubenzuron *per se*, in or on citrus, artichokes, walnuts, mushrooms, cottonseed, soybean, and associated livestock commodities. Existing tolerances range from 0.05 ppm in/on soybeans to 6.0 ppm in/on artichokes. Tolerances of 0.05 ppm have also been established for residues of diflubenzuron in animal commodities.

For the dietary risk assessment, anticipated residues levels for were calculated in livestock commodities. Anticipated residue estimates for diflubenzuron were not calculated for raw agricultural commodities. Percent crop treated data were utilized where available.

Section 408(b)(2)(F) states that the Agency may use data on the actual percent of food treated for assessing chronic dietary risk only if the Agency can make the following findings: (1) That the data used are reliable and provide a valid basis for showing the percentage of food derived from a crop that is likely to contain residues; (2) that the exposure estimate does not underestimate the exposure for any significant subpopulation and; (3) where data on regional pesticide use and food consumption are available, that the exposure estimate does not understate exposure for any regional population. In addition, the Agency must provide for periodic evaluation of any estimates used. To provide for the periodic evaluation of these estimates of percent crop treated as required by section 408(b)(2)(F), EPA may require registrants to submit data on percent crop treated (PCT).

Dietary exposure estimates were based on the following percent crop treated estimates: grass/rangeland, 1%; cottonseed, 3%; soybean, 1%; cattle bolus, 5%. Other commodities were assumed to be 100 percent treated. The Agency believes that the three conditions listed above have been met. With respect to (1), EPA finds that the PCT information described above for diflubenzuron is reliable and has a valid basis. The Agency has utilized statistical data from public and proprietary sources, including DOANE, and checked these against data provided by the registrant. These are the best available sources for such information. Concerning (2) and (3), regional consumption information and consumption information for significant subpopulations is taken into account through EPA's computer-based model for evaluating the exposure of significant subpopulations including several regional groups. Use of this consumption information in EPA's risk assessment process ensures that EPA's exposure estimate does not understate exposure for any significant subpopulation group and allows the Agency to be reasonably certain that no regional population is exposed to residue levels higher than those estimated by the Agency. Other than data available through national food consumption surveys, EPA does not have available information on the consumption of food bearing diflubenzuron in a particular area.

Risk assessments were conducted as follows:

a. *Acute exposure and risk*. A risk assessment for acute dietary exposure (1 day) is not necessary. One day single dose oral studies in rats and mice indicated only marginal effects on methemoglobin levels at a dose level of 10,000 mg/kg of diflubenzuron (25% wettable powder formulation). Sulfhemoglobin levels and Heinz bodies were not affected.

b. *Chronic exposure and risk*. A chronic dietary risk assessment is required for diflubenzuron. The RfD used for the chronic dietary analysis for diflubenzuron is 0.02 mg/kg bwt/day. The DRES analysis utilized anticipated residues and percent crop treated, where available. The proposed diflubenzuron tolerance result in a dietary exposure that is equivalent to the following percent of the RfD:

Subgroups	Diflubenzuron
U.S. population (48 states)	< 1%
Hispanics	< 1%
Non-hispanic others	< 1%
Nursing Infants (< 1 year old)	< 1%
Non-nursing infants (<1 year old)	< 1%
Females (13+ years, pregnant)	< 1%
Females (13+ years, nursing)	< 1%
Children (1-6 years old)	1%
Children (7-12 years old)	< 1%
Females (20+ years, not pregnant, not nursing)	< 1%

EPA does not consider the chronic dietary risk to exceed the level of concern.

c. *Cancer risk from consumption of PCA and related metabolites*. The Agency has determined that there are three sources of carcinogenic metabolites from the current uses of diflubenzuron and has added these three sources together to estimate the total cancer risk for PCA and related metabolites.

The first source is mushrooms. The Agency used results from mushroom metabolism studies to determine the percent of Total Radioactive Residue (TRR) present as PCA or the related compound CPU in mushrooms. The percent crop treated value for mushrooms, 30%, is an upper bound estimate. The overall U.S. dietary exposure is 0.0000045 mg/kg/day for a risk estimate of 2.9 x 10^{-7}.

For the second source, animal commodities, tolerance levels for diflubenzuron in animal commodities were used and, adjusting for percent crop treated of feed items, total levels of PCA and related compounds were estimated. The overall U.S. dietary exposure is 0.000004 mg/kg/day for a risk estimate of 2.7 x 10^{-7}.

Finally, based on the results of a rat metabolism study, assumption of a 2.0% conversion of diflubenzuron to PCA in humans was assumed. Using the above exposure estimate for rice and currently registered uses of diflubenzuron, the calculated exposure is 0.00008 mg/kg/day for a risk estimate of 1.0 x 10^{-7}.

The total of these three estimates gives a total cancer risk estimate for PCA and related metabolites from all dietary sources of diflubenzuron of 6.6 x 10^{-7}.

2. *From drinking water*. HED has calculated drinking water levels of concern (DWLOCs) for chronic (non-cancer) exposure to diflubenzuron in surface and ground water for the U.S. population and children (1-6 yrs). They are 700 and 200 ppb, respectively. For chronic (cancer) exposure to CPU in surface and ground water, the DWLOC is 0.21 ppb for the U.S. population. To calculate the DWLOC for chronic (non-cancer) exposure relative to a chronic toxicity endpoint, the chronic dietary food exposure (from DRES) was subtracted from the RfD to obtain the acceptable chronic (non-cancer) exposure to diflubenzuron in drinking water. To calculate the DWLOC for chronic exposures relative to a carcinogenic toxicity endpoint, the chronic (cancer) dietary food exposure was subtracted from the ratio of the negligible cancer risk to the Q* to obtain the acceptable chronic (cancer) exposure to diflubenzuron in drinking water. DWLOCs were then calculated using default body weights and drinking water consumption figures.

a. *Chronic risk*: Chronic RfD = 0.002 mg/kg/day. Maximum H_2O = 0.002 - Food Exposure.

Subgroup	Food Exposure (from DRES mg/kg/day)	Maximum H_2O Exposure (mg/kg/day)
U.S. population	0.000080	0.01992
Children (1-6 years)	0.00021	0.01980

U.S. Population: DWLOC = 700 ppb
Children (1-6 years): DWLOC = 200 ppb

b. Cancer risk: Q* = 6.38 x 10^{-2} (mg/kg/day) -- Maximum H_2O = 1.6 x 10^{-5} - Food Exposure

Subgroup	Food Exposure (mg/kg/day)	Maximum H_2O Exposure (mg/kg/day)
U.S. population	0.0000101	0.0000059

U.S. population: DWLOC = 0.21 ppb

The estimated average concentration of diflubenzuron in surface water sources is not expected to exceed 0.05 ppb. Estimated average concentrations of CPU in surface water sources is not expected to exceed 0.85 ppb. The estimated average concentrations of diflubenzuron in surface water are less than EPA's levels of concern for diflubenzuron in drinking water as a contribution to chronic (non-cancer) aggregate exposure. However, the estimated average concentration (0.85 ppb) of CPU in surface water exceeds EPA's levels of concern for CPU in drinking water (0.21 ppb) as a contribution to chronic (cancer) aggregate exposure.

EPA believes the estimates of CPU exposure in water derived from the PRZM-EXAMS model, particularly the estimates pertaining to chronic exposure, are significantly overstated for several reasons. The PRZM-EXAMS model was designed to estimate exposure from ecological risk assessments and thus uses a scenario of a body of water approximating the size of a 1 hectare (2.5 acres) pond. This tends to overstate chronic drinking water exposure levels for the following reasons. First, surface water source drinking water generally comes from bodies of water that are substantially larger than a 1 hectare (2.5 acres) pond. Second, the modeled scenario also assumes that essentially the whole basin receives an application of the pesticide. Yet in virtually all cases, basins large enough to support a drinking water facility will contain a substantial fraction of the area which does not receive pesticide. Third, there is often at least some flow (in a river) or turnover (in a reservoir or lake) of the water so the persistence of the pesticide near the drinking water facility is usually overestimated. Fourth, even assuming a reservoir is directly adjacent to an agricultural field, the agricultural field may not be used to grow a crop on which the pesticide in question is registered for use. Fifth, the PRZM-EXAMS modeled scenario does not take into account reductions in residue-loading due to applications of less than the maximum application rate or no treatment of the crop at all (percent crop treated data). Although there is a high degree of uncertainty to this analysis, these are the best available estimates of concentrations of CPU in drinking water. EPA believes that these numbers justify asking for field runoff monitoring for CPU in conjunction with the registered use on cotton.

EPA bases this determination on a comparison of estimated concentrations

of diflubenzuron and CPU in surface waters and ground waters to back-calculated ''levels of concern'' for diflubenzuron and CPU in drinking water. These levels of concern in drinking water were determined after EPA has considered all other non-occupational human exposures for which it has reliable data, including all current uses, and uses considered in this action. The estimates of diflubenzuron and CPU in surface and ground waters are derived from water quality models that use conservative assumptions (health-protective) regarding the pesticide transport from the point of application to surface and ground water. Because EPA considers the aggregate risk resulting from multiple exposure pathways associated with a pesticide's uses, levels of concern in drinking water may vary as those uses change. If new uses are added in the future, EPA will reassess the potential impacts of diflubenzuron and CPU on drinking water as a part of the aggregate risk assessment process.

3. *From non-occupational non-dietary exposure*. Diflubenzuron is a restricted use pesticide and therefore not available for use by homeowners. However, non-agricultural uses of diflubenzuron may expose people in residential locations. Based on the low dermal absorption rate (0.5%), and the extremely low dermal and inhalation toxicity, these uses are expected to result in insignificant risk.

4. *Cumulative exposure to substances with common mechanism of toxicity*. Section 408(b)(2)(D)(v) requires that, when considering whether to establish, modify, or revoke a tolerance, the Agency consider ''available information'' concerning the cumulative effects of a particular pesticide's residues and '' other substances that have a common mechanism of toxicity.'' An explanation of the current Agency approach to assessment of pesticides with a common mechanism of toxicity may be found in the Final Rule on Bifenthrin Pesticide Tolerances (62 FR 62961).

Diflubenzuron is structurally similar to other substituted benzoylurea insecticides including triflumuron and flucycloxuron. EPA does not have, at this time, available data to determine whether diflubenzuron has a common mechanism of toxicity with other substances or how to include this pesticide in a cumulative risk assessment. Unlike other pesticides for which EPA has followed a cumulative risk approach based on a common mechanism of toxicity, diflubenzuron does not appear to produce a toxic metabolite produced by other substances. For the purposes of this tolerance action, therefore, EPA has not assumed that diflubenzuron has a common mechanism of toxicity with other substances.

D. Aggregate Risks and Determination of Safety for U.S. Population, Infants, and Children

1. *Acute risk*. There is no risk from acute dietary exposure (1 day) to diflubenzuron as there is no toxic endpoint identified.

2. *Chronic*. For the U.S. population, <1% of the RfD is occupied by dietary (food) exposure. The estimated average concentrations of diflubenzuron in surface and ground water are less than OPP's levels of concern for diflubenzuron in drinking water. Therefore, EPA concludes that there is a reasonable certainty that no harm will result to infants, children, or adults from chronic aggregate (food plus water) exposure to diflubenzuron residues.

3. *Carcinogenic aggregate exposure and risk*. For the U.S. population, cancer risk resulting from dietary (food) exposure is 6.6×10^{-7}. The estimated average concentration (0.85 ppb) of CPU in surface water exceeds EPA's levels of concern for CPU in drinking water (0.21 ppb) as a contribution to chronic (cancer) aggregate exposure. However, EPA believes that these PRZM-EXAMS model overestimates exposures for the reasons given above. EPA does not generally use surface water modeling values for quantitative risk assessment. However, due to the statistical uncertainties regarding the significance of cancer risks which are near 1×10^{-6}, EPA has calculated that the cancer risk resulting from 0.85 ppb of CPU in drinking water is 1.55×10^{-6}. The aggregate cancer risk is thus 2.2×10^{-6} (6.6×10^{-7} for food + 1.55×10^{-6} for water).

4. *Determination of safety*. EPA believes that the total risk estimate for CPU in food and drinking water of 2.2×10^{-6} generally represents a negligible risk, as EPA has traditionally applied that concept. EPA has commonly referred to a negligible risk as one that is at or below 1 in 1 million (1×10^{-6}). Quantitative cancer risk assessment is not a precise science. There are a significant number of uncertainties in both the toxicology used to derive the cancer potency of a substance and in the data used to measure and calculate exposure. The Agency does not attach great significance to numerical estimates for carcinogenic risk that differ by approximately a factor of 2.

III. Other Considerations

A. Metabolism in Plants and Animals

The qualitative nature of the residue in plants is adequately understood based on data from citrus, mushroom, and soybean metabolism studies. The Agency has concluded that tolerances should be expressed in terms of the combined residues of diflubenzuron and metabolites convertible to PCA (CPU and PCAA) expressed as diflubenzuron. However, for the purposes of this temporary tolerance petition, diflubenzuron *per se* should be the regulated residue in plants.

The nature of the residue in animals is adequately understood based on acceptable poultry and ruminant metabolism studies reflecting oral dosing. Terminal residues identified in animal tissues, milk, and eggs include diflubenzuron, 2-hydroxy-diflubenzuron (2HDFB), 2,6-difluorobenzamide (DFBAM), 2,6-difluorobenzoic acid (DFBA), N-(4-chlorophenyl)urea (CPU), and PCA. For the purposes of this temporary tolerance petition, diflubenzuron should be the regulated residue in animals.

B. Analytical Enforcement Methodology

Adequate methods are available for the analysis of Diflubenzuron in rice grain (0.01 ppm), rice straw (0.01 ppm) and water (0.001 ppm). The method for measuring PCA in rice grain recovers only about 50% at the 0.025 ppm level. As part of the reregistration of diflubenzuron, the Agency concluded that tolerances should be expressed in terms of the combined residues of diflubenzuron and metabolites. Until suitable methodology is developed, regulation of diflubenzuron *per se* is an acceptable alternative. Three enforcement methods for diflubenzuron are published in PAM, Vol. II as Methods I, II, and III. Method II is a GC/ECD method that can separately determine residues of diflubenzuron, CPU, and PCA in eggs, milk, and animal tissues. All three methods have undergone successful Agency validations and are acceptable for enforcement purposes. The FDA PESTDATA data base dated 1/94 (PAM Vol. I, Appendix II) contains no information on diflubenzuron recovery using Multiresidue Methods PAM, Vol. I Sections 302, 303, and 304. However, the registrant has submitted multi-residue testing data that the Agency has forwarded to the FDA.

C. Magnitude of Residues

Uniroyal Chemical Company submitted data from 10 tests depicting residues of diflubenzuron in/on rice.

Ten trials were conducted in Arizona (2), California (2), Louisiana (1), Mississippi (2), and Texas (3). At each site rice grain and straw were harvested at normal maturity following one broadcast application of diflubenzuron (25% WP, EPA Reg. No. 400-465; 2 lb/gal FlC, EPA Reg. No. 400-461) at 0.25 lb. ai/A (1x the maximum proposed application rate). A single application was made 10 days or 2 weeks following permanent flood or rice emergence, respectively. Applications of the WP/D and FlC formulation were made in 10 gal of water/A using ground equipment. Aerial applications of the FlC formulation were made at 5-10 gal of water/A. Residues of diflubenzuron and PCA in/on treated rice grain were <LOQ for all samples. The submitted field trial data indicate that residues of diflubenzuron will not exceed the proposed temporary tolerance of 0.01 ppm in/on rice grain. As an adjunct to the magnitude of the residue study on rice, the petitioner also conducted residue studies to determine the magnitude of the residue of diflubenzuron in treated rice flood waters. Residue levels were determined from samples taken from the treated and untreated plots of the diflubenzuron crop field trials. Five trials were conducted in California (2), Louisiana (1), and Texas (2). Following one broadcast application of diflubenzuron as a 25% WP formulation or 2 lb/gal FlC formulation at 0.25 lb. ai/A (1x the maximum proposed application rate) as described in the crop field trial discussion, one control and duplicate treated samples of water were collected from each plot at each test site at intervals of 0, 1, 3, 7, 14, 21, and 28 days following insecticide application. For the sampling intervals 0, 1, 3 and 7 days after application of diflubenzuron at 1x the maximum proposed application rate (0.25 lb. ai/A), residues of diflubenzuron in treated rice flood waters were 0.011 to 0.04 ppm, 0.0007 to 0.027 ppm, <0.0003 to 0.020 ppm, and <0.0003 to 0.0014 ppm; residues were <LOQ for all samples collected 14 or more days after treatment.

There are several active SLNs [SLN Nos. AL930004, FL910004, HI940003, CA850041, CA870049, and NV940003] which allow the application of diflubenzuron to water at a maximum rate 0.25 lb. ai/A for mosquito abatement. Labels prohibit the use of treated water for irrigation or human consumption. The proposed label recommends the retention of flood waters for 14 days to allow for the dissipation of diflubenzuron residues. Residue data indicate that diflubenzuron residues >LOQ may be present in rice flood waters <14 days after application of diflubenzuron.

D. Magnitude of the Residue in Processed Commodities

Uniroyal Chemical Company submitted data depicting the potential for concentration of diflubenzuron residues in the processed commodities of rice. Two tests were conducted in Mississippi (1) and Texas (1). At each site, rice grain was harvested at maturity, 82 to 85 days following a post-permanent flood application of the 2 lb/gal FlC formulation at 2 lb. ai/A (8x the proposed maximum application rate). Samples were processed according to simulated commercial procedures into hulls, bran, and polished rice. Residues of diflubenzuron were non-detectable (LOQ <0.01 ppm) and 0.26 and 0.87 ppm in four treated samples of the RAC, and did not concentrate in processed commodities of rice harvested 82 to 85 days following a single 2 lb. ai/A (8x) of diflubenzuron. As the residues of diflubenzuron did not concentrate in the hull, bran, or whole rice fractions of processed rice grain, a tolerance for residues in rice processed commodities is not required.

E. Magnitude of Secondary Residues in Meat/Milk/Poultry/Eggs

Rice grain, straw, hulls and bran may be fed to livestock and/or poultry. However, the incremental exposure of diflubenzuron residues to livestock and poultry is minimal when compared to the existing exposure. EPA concludes that the current tolerances on meat, milk, poultry and eggs are adequate to cover the added residues resulting from the experimental use on rice.

F. International Residue Limits

There are no Codex proposals, Canadian, or Mexican limits for residues of diflubenzuron on rice. A compatibility issue is not relevant to the proposed temporary tolerance.

G. Rotational Crop Restrictions.

The nature of the residue in rotational crops is adequately understood for purposes of reregistration (residue chemistry chapters for the Reregistration Eligibility Decision (RED) document, March 16, 1995). Although EPA concluded that the available confined rotational crop study was inadequate to fully satisfy GLN 165-1 reregistration requirements, another confined rotational crop study will not be required because the study allowed EPA to make regulatory conclusions regarding the need for limited rotational crop studies (GLN 165-2) and to comment on the appropriateness of the currently established plantback interval (PBI) on diflubenzuron end-use product labels.

Residue data on field-grown rotational crops are not available. Although the confined study was deemed inadequate, the available data indicate that diflubenzuron and CPU may exceed 0.01 ppm in rotational crops planted up to 4 months after a 1x application of diflubenzuron to the primary crop and in cereal grains planted up to 12 months after a 1x application.

IV. Conclusion

Therefore, the temporary tolerance is established for residues of the insecticide diflubenzuron (N-[[4-chlorophenyl)amino]-carbonyl]-2,6-difluorobenzamide) and metabolites convertible to p-chloroaniline expressed as diflubenzuron on rice grain at 0.01 ppm.

V. Objections and Hearing Requests

The new FFDCA section 408(g) provides essentially the same process for persons to ''object'' to a tolerance regulation issued by EPA under new section 408(e) and (l)(6) as was provided in the old section 408 and in section 409. However, the period for filing objections is 60 days, rather than 30 days. EPA currently has procedural regulations which govern the submission of objections and hearing requests. These regulations will require some modification to reflect the new law. However, until those modifications can be made, EPA will continue to use those procedural regulations with appropriate adjustments to reflect the new law.

Any person may, by July 13, 1998, file written objections to any aspect of this regulation and may also request a hearing on those objections. Objections and hearing requests must be filed with the Hearing Clerk, at the address given above (40 CFR 178.20). A copy of the objections and/or hearing requests filed with the Hearing Clerk should be submitted to the OPP docket for this rulemaking. The objections submitted must specify the provisions of the regulation deemed objectionable and the grounds for the objections (40 CFR 178.25). Each objection must be accompanied by the fee prescribed by 40 CFR 180.33(i). If a hearing is requested, the objections must include a statement of the factual issues on which a hearing is requested, the requestor's contentions on such issues, and a summary of any evidence relied upon by the requestor (40 CFR 178.27). A request for a hearing will be granted if the Administrator determines that the

material submitted shows the following: There is genuine and substantial issue of fact; there is a reasonable possibility that available evidence identified by the requestor would, if established, resolve one or more of such issues in favor of the requestor, taking into account uncontested claims or facts to the contrary; and resolution of the factual issues in the manner sought by the requestor would be adequate to justify the action requested (40 CFR 178.32). Information submitted in connection with an objection or hearing request may be claimed confidential by marking any part or all of that information as CBI. Information so marked will not be disclosed except in accordance with procedures set forth in 40 CFR part 2. A copy of the information that does not contain CBI must be submitted for inclusion in the public record. Information not marked confidential may be disclosed publicly by EPA without prior notice.

VI. Public Docket

EPA has established a record for this rulemaking under docket control number [OPP–300660] (including any comments and data submitted electronically). A public version of this record, including printed, paper versions of electronic comments, which does not include any information claimed as CBI, is available for inspection from 8:30 a.m. to 4 p.m., Monday through Friday, excluding legal holidays. The public record is located in Rm. 1119 of the Public Information and Records Integrity Branch, Information Resources and Services Division (7506C), Office of Pesticide Programs, Environmental Protection Agency, Crystal Mall #2, 1921 Jefferson Davis Highway, Arlington, VA.

Electronic comments may be sent directly to EPA at:

opp-docket@epamail.epa.gov.

Electronic comments must be submitted as an ASCII file avoiding the use of special characters and any form of encryption.

The official record for this rulemaking, as well as the public version, as described above will be kept in paper form. Accordingly, EPA will transfer any copies of objections and hearing requests received electronically into printed, paper form as they are received and will place the paper copies in the official rulemaking record which will also include all comments submitted directly in writing. The official rulemaking record is the paper record maintained at the Virginia address in ''ADDRESSES'' at the beginning of this document.

VII. Regulatory Assessment Requirements

This final rule establishes a temporary tolerance for the residues of diflubenzuron (N-[[4-chlorophenyl)amino]-carbonyl]-2,6-difluorobenzamide) and metabolites convertible to p-chloroaniline expressed as diflubenzuron on rice grain at 0.01 ppm under FFDCA section 408(d) in response to a petition submitted to the Agency. The Office of Management and Budget (OMB) has exempted these types of actions from review under Executive Order 12866, entitled *Regulatory Planning and Review* (58 FR 51735, October 4, 1993). This final rule does not contain any information collections subject to OMB approval under the Paperwork Reduction Act (PRA), 44 U.S.C. 3501 *et seq.*, or impose any enforceable duty or contain any unfunded mandate as described under Title II of the Unfunded Mandates Reform Act of 1995 (UMRA) (Pub. L. 104-4). Nor does it require any prior consultation as specified by Executive Order 12875, entitled *Enhancing the Intergovernmental Partnership* (58 FR 58093, October 28, 1993), or special considerations as required by Executive Order 12898, entitled *Federal Actions to Address Environmental Justice in Minority Populations and Low-Income Populations* (59 FR 7629, February 16, 1994), or require OMB review in accordance with Executive Order 13045, entitled *Protection of Children from Environmental Health Risks and Safety Risks* (62 FR 19885, April 23, 1997).

In addition, since these tolerances and exemptions that are established on the basis of a petition under FFDCA section 408(d), such as the tolerances for the residues of diflubenzuron (N-[[4-chlorophenyl)amino]-carbonyl]-2,6-difluorobenzamide) and metabolites convertible to p-chloroaniline expressed as diflubenzuron on rice grain at 0.01 ppm in this final rule, do not require the issuance of a proposed rule, the requirements of the Regulatory Flexibility Act (RFA) (5 U.S.C. 601 et seq.) do not apply. Nevertheless, the Agency has previously assessed whether establishing tolerances, exemptions from tolerances, raising tolerance levels or expanding exemptions might adversely impact small entities and concluded, as a generic matter, that there is no adverse economic impact. The factual basis for the Agency's generic certification for tolerance actions published on May 4, 1981 (46 FR 24950) and was provided to the Chief Counsel for Advocacy of the Small Business Administration.

VIII. Submission to Congress and the General Accounting Office

The Congressional Review Act, 5 U.S.C. 801 *et seq.*, as added by the Small Business Regulatory Enforcement Fairness Act of 1996, generally provides that before a rule may take effect, the agency promulgating the rule must submit a rule report, which includes a copy of the rule, to each House of the Congress and to the Comptroller General of the United States. EPA will submit a report containing this rule and other required information to the U.S. Senate, the U.S. House of Representatives, and the Comptroller General of the United States prior to publication of the rule in the **Federal Register**. This rule is not a ''major rule'' as defined by 5 U.S.C. 804(2).

List of Subjects in 40 CFR Part 180

Environmental protection, Administrative practice and procedure, Agricultural commodities, Pesticides and pests, Reporting and recordkeeping requirements.

Dated: May 7, 1998.

James Jones,

Director, Registration Division, Office of Pesticide Programs.

Therefore, 40 CFR chapter I is amended as follows:

PART 180—[AMENDED]

1. The authority citation for part 180 continues to read as follows:

Authority: 21 U.S.C. 346a and 371.

2. By revising § 180.377 to read as follows:

§ 180.377 Diflubenzuron; tolerances for residues.

(a) *General.* (1) Tolerances are established for residues of the insecticide diflubenzuron (*N*-[[(4-chlorophenyl)amino]carbonyl]-2,6-difluorobenzamide) in or on the following raw agricultural commodities:

Commodity	Parts per million
Artichokes	6.0
Cattle, fat	0.05
Cattle, mbyp	0.05
Cattle, meat	0.05
Cottonseed	0.2
Eggs	0.05
Goats, fat	0.05
Goats, mbyp	0.05
Goats, meat	0.05
Grapefruit	0.5
Hogs, fat	0.05
Hogs, mbyp	0.05
Hogs, meat	0.05
Horses, fat	0.05

Commodity	Parts per million
Horses, mbyp	0.05
Horses, meat	0.05
Milk	0.05
Mushrooms	0.2
Orange	0.5
Poultry, fat	0.05
Poultry, mbyp	0.05
Poultry, meat	0.05
Sheep, fat	0.05
Sheep, mbyp	0.05
Sheep, meat	0.05
Soybeans	0.05
Tangerine	0.5
Walnuts	0.1

(2) A temporary tolerance expiring June 30, 1999, is established for residues of the insecticide diflubenzuron (N-[[4-chlorophenyl)amino]-carbonyl]-2,6-difluorobenzamide) and metabolites convertible to p-chloroaniline expressed as diflubenzuron on rice grain at 0.01 ppm.

(b) *Section 18 emergency exemptions.* [Reserved]

(c) *Tolerances with regional registrations.* Tolerances with regional registration, as defined in § 180.1(n), are established for residues of diflubenzuron in or on the following raw agricultural commodities:

Commodity	Parts per million
Grass, pasture	1.0
Grass, range	3.0

(d) Indirect or inadvertent residues. [Reserved]

[FR Doc. 98–12640 Filed 5–12–98; 8:45 am]

BILLING CODE 6560–50–F

GENERAL SERVICES ADMINISTRATION

41 CFR Chapter 301

[FTR Amendment 72]

RIN 3090–AG72

Federal Travel Regulation; Maximum Per Diem Rates

AGENCY: Office of Governmentwide Policy, GSA.

ACTION: Final rule.

SUMMARY: This final rule amends the Federal Travel Regulation (FTR) to change the maximum per diem rate prescribed in FTR Amendment 68 (62 FR 63798, December 2, 1997) for El Paso (El Paso County), Texas.

The General Services Administration (GSA), after an analysis of additional data, has determined that the current lodging allowance for El Paso, Texas does not adequately reflect the costs of lodging accommodations near Federal Government facilities. To provide adequate per diem reimbursement for Federal employee travel to El Paso, Texas, the maximum lodging allowance is being changed to $78 and the meals and incidental expenses (M&IE) rate remains at $34, resulting in a maximum per diem rate of $112.

EFFECTIVE DATE: This final rule is effective May 13, 1998, and applies for travel performed on or after May 13, 1998.

FOR FURTHER INFORMATION CONTACT: Joddy Garner, General Services Administration, Travel and Transportation Management Policy Division (MTT), Washington, DC 20405, telephone 202–501–1538.

SUPPLEMENTARY INFORMATION: GSA has determined that this rule is not a significant regulatory action for the purposes of Executive Order 12866 of September 30, 1993. This final rule is not required to be published in the **Federal Register** for notice and comment. Therefore, the Regulatory Flexibility Act does not apply. This rule is also exempt from Congressional review prescribed under 5 U.S.C. 801 since it relates solely to agency management and personnel.

For the reasons set out in the preamble, under 5 U.S.C. 5701-5709 title 41, Chapter 301 of the Code of Federal Regulations is revised to read as follows:

CHAPTER 301—TRAVEL ALLOWANCES

Appendix A to chapter 301 is amended by removing the corresponding lodging, M&IE, and maximum per diem rates for El Paso, Texas, and inserting in their places the following entry:

Appendix A To Chapter 301—Prescribed Maximum Per Diem Rates For Conus

* * * * * * *

El Paso El Paso 78 34 112

* * * * * * *

Dated: May 6, 1998.

David J. Barram,

Administrator of General Services.

[FR Doc. 98–12827 Filed 5–12–98; 8:45 am]

BILLING CODE 6820–14–P

CORPORATION FOR NATIONAL AND COMMUNITY SERVICE

45 CFR Parts 1215 and 2507

RIN 3045–AA16

Freedom of Information Act Regulation and Implementation of Electronic Freedom of Information Act Amendments of 1996

AGENCY: Corporation for National and Community Service.

ACTION: Final rule.

SUMMARY: The Corporation for National and Community Service (hereinafter the ''Corporation'') has revised its regulations under the Freedom of Information Act (FOIA). The Corporation redesignated the existing regulations under former ACTION's CFR chapter as updated regulations under the Corporation's CFR chapter. These procedures facilitate the public's access to Corporation records, and implement the Electronic Freedom of Information Act Amendments of 1996.

DATES: This final rule is effective June 12, 1998.

FOR FURTHER INFORMATION CONTACT: Bill Hudson, Corporation FOIA/Privacy Act Officer, at (202) 606–5000, ext. 265.

SUPPLEMENTARY INFORMATION: The Corporation published a notice of proposed rulemaking on March 12, 1998 (63 FR 12068) announcing its intention to redesignate the existing regulations under former ACTION's CFR chapter as updated regulations under the Corporation's CFR chapter. The functions of the ACTION agency, including the VISTA and senior volunteer programs, were transferred to the Corporation on April 4, 1994. The Corporation operates under two statutes, the National and Community Service Act of 1990, as amended, 42 U.S.C. 12501 *et seq.*, and the Domestic Volunteer Service Act of 1973, as amended, 42 U.S.C. 4950 *et seq.*

The Corporation received only two comments on this proposed rule. One comment requested that the Corporation publish a more detailed index list of documents available on its internet web site. The Corporation's FOIA Officer will publish a more detailed index list on its internet web site as additional types of documents become available on that site. The other comment was a request to grant the Corporation's Office of Inspector General (OIG) authority to make the final determination on all FOIA appeals where the OIG denied the initial request for any document in its possession. The Corporation has determined that its Chief Operating

Officer (COO) will continue to make the final determination on all appeals filed as a result of the OIG's initial determination to deny the release of documents to a FOIA requester.

This final rule redesignates ACTION's policy at 45 CFR Chapter XII, Part 1215, to be revised as 45 CFR Chapter XXV, Part 2507, and governs the Corporation as a whole.

Distribution Table

Old 45 CFR part 1215	New 45 CFR part 2507
1215.1	2507.1
1215.2	2507.2
1215.3	2507.3
1214.4	2507.4
1215.5	2507.5
1215.6	2507.6
1215.7	2507.7
1215.8	2507.8
1215.9	2507.9
1215.10	2507.10
Appendix 1(A)	Appendix A
Appendix 1(B)	Appendix B

Regulatory Flexibility Act

The General Counsel, in accordance with the Regulatory Flexibility Act (5 U.S.C. 606(b)), has reviewed this regulation and by approving it certifies that this regulation will not have a significant economic impact on a substantial number of small entities. Under the Freedom of Information Act, agencies may recover only the direct costs for searching for, reviewing, and duplicating the records processed for requesters. Thus, fees accessed by the Corporation are nominal. Further, the ''small entities'' that make FOIA requests, as compared with individual requesters and other requesters, are relatively few in number.

Executive Order 12866

This regulation has been drafted and reviewed in accordance with Executive Order 12866. The Office of Management and Budget has reviewed this rule and has determined that this rule is not a ''significant regulatory action'' under Executive Order 12866, section 3(f), Regulatory Planning and Review.

Unfunded Mandates Reform Act of 1995

This rule will not result in the expenditure by State, local, and tribal governments, in the aggregate, or by the private sector, of $100,000,000 or more in any one year, and it will not significantly or uniquely affect small governments. Therefore, no actions were deemed necessary under the provisions of the Unfunded Mandates Reform Act of 1995.

Small Business Regulatory Enforcement Fairness Act of 1996

This rule is not a major rule as defined by § 804 of the Small Business Regulatory Enforcement Fairness Act of 1996. This rule will not result in an annual effect on the economy of $100,000,000 or more; a major increase in costs or prices; or significant adverse effects on competition, employment, investment, productivity, innovation, or on the ability of United States-based companies to compete with foreign-based companies in domestic and export markets.

List of Subjects in 45 CFR Parts 1215 and 2507

Confidential business information, Freedom of information.

Accordingly, and under the authority of 42 U.S.C. 12501 et. seq., the Corporation amends 45 CFR chapters XII and XXV as follows:

PART 1215—[REDESIGNATED AS PART 2507]

1. Part 1215 in 45 CFR chapter XII is redesignated as part 2507 in 45 CFR chapter XXV and is revised to read as follows:

PART 2507—PROCEDURES FOR DISCLOSURE OF RECORDS UNDER THE FREEDOM OF INFORMATION ACT

Sec.

2507.1 Definitions.
2507.2 What is the purpose of this part?
2507.3 What types of records are available for disclosure to the public?
2507.4 How are requests for records made?
2507.5 How does the Corporation process requests for records?
2507.6 Under what circumstances may the Corporation extend the time limits for an initial response?
2507.7 How does one appeal the Corporation's denial of access to records?
2507.8 How are fees determined?
2507.9 What records will be denied disclosure under this part?
2507.10 What records are specifically exempt from disclosure?
2507.11 What are the procedures for the release of commercial business information?
2507.12 Authority.
Appendix A to Part 2507—Freedom of Information Act Request Letter (Sample)
Appendix B to Part 2507—Freedom of Information Act Appeal for Release of Information (Sample)

Authority: 42 U.S.C. 12501 *et seq.*

§ 2507.1 Definitions.

As used in this part, the following definitions shall apply:

(a) *Act* means section 552 of Title 5, United States Code, sometimes referred to as the ''Freedom of Information Act'', and Pub. L. 104–231, 110 Stat. 3048, sometimes referred to as the ''Electronic Freedom of Information Act Amendments of 1996.''

(b) *Agency* means any executive department, military department, government corporation, or other establishment in the executive branch of the Federal Government, or any independent regulatory agency. Thus, the Corporation is a Federal agency.

(c) *Commercial use request* means a request from, or on behalf of, a person who seeks information for a use or purpose that furthers the commercial, trade, or profit interests of the requester or the person on whose behalf the request is made. The use to which the requester will put the records sought will be considered in determining whether the request is a commercial use request.

(d) *Corporation* means the Corporation for National and Community Service.

(e) *Educational institution* means a pre-school, elementary or secondary school, institution of undergraduate or graduate higher education, or institution of professional or vocational education, which operates a program of scholarly research.

(f) *Electronic data* means records and information (including e-mail) which are created, stored, and retrievable by electronic means.

(g) *Freedom of Information Act Officer (FOIA Officer)* means the Corporation official who has been delegated the authority to make the initial determination on whether to release or withhold records, and to assess, waive, or reduce fees in response to FOIA requests.

(h) *Non-commercial scientific institution* means an institution that is not operated substantially for purposes of furthering its own or someone else's business trade, or profit interests, and that is operated for purposes of conducting scientific research whose results are not intended to promote any particular product or industry.

(i) *Public interest* means the interest in obtaining official information that sheds light on an agency's performance of its statutory duties because the information falls within the statutory purpose of the FOIA to inform citizens about what their government is doing.

(j) *Record* includes books, brochures, electronic mail messages, punch cards, magnetic tapes, cards, discs, paper tapes, audio or video recordings, maps, pamphlets, photographs, slides, microfilm, and motion pictures, or other documentary materials, regardless of physical form or characteristics, made or received by the Corporation pursuant

to Federal law or in connection with the transaction of public business and preserved by the Corporation as evidence of the organization, functions, policies, decisions, procedures, operations, programs, or other activities. Record does not include objects or articles such as tangible exhibits, models, equipment, or processing materials; or formulas, designs, drawings, or other items of valuable property. Record does not include books, magazines, pamphlets or other materials acquired solely for reference purposes. Record does not include personal records of an individual not subject to agency creation or retention requirements, created and maintained primarily for the convenience of an agency employee, and not distributed to other agency employees for their official use. Record does not include information stored within a computer for which there is no existing computer program for retrieval of the requested information. A record must exist and be in the possession and control of the Corporation at the time of the request to be considered subject to this part and the FOIA. There is no obligation to create, compile, or obtain a record to satisfy a FOIA request. See § 2507.5(d) with respect to creating a record in the electronic environment.

(k) *Representative of the news media* means a person who is actively gathering information for an entity organized to publish, broadcast or otherwise disseminate news to the public. News media entities include television and radio broadcasters, publishers of periodicals who distribute their products to the general public or who make their products available for purchase or subscription by the general public, and entities that may disseminate news through other media (e.g., electronic dissemination of text). Freelance journalists will be treated as representatives of a new media entity if they can show a likelihood of publication through such an entity. A publication contract would be the clearest proof, but the Corporation may also look to the past publication record of a requester in making this determination.

(l) *FOIA request* means a written request for Corporation records, made by any person, including a member of the public (U.S. or foreign citizen), an organization, or a business, but not including a Federal agency, an order from a court, or a fugitive from the law, that either explicitly or implicitly involves the FOIA, or this part. Written requests may be received by postal service or by facsimile.

(m) *Review* means the process of examining records located in response to a request to determine whether any record or portion of a record is permitted to be withheld. It also includes processing records for disclosure (i.e., excising portions not subject to disclosure under the Act and otherwise preparing them for release). Review does not include time spent resolving legal or policy issues regarding the application of exemptions under the Act.

(n) *Search* means looking for records or portions of records responsive to a request. It includes reading and interpreting a request, and also page-by-page and line-by-line examination to identify responsive portions of a document. However, it does not include line-by-line examination where merely duplicating the entire page would be a less expensive and quicker way to comply with the request.

§ 2507.2 What is the purpose of this part?

The purpose of this part is to prescribe rules for the inspection and release of records of the Corporation for National and Community Service pursuant to the Freedom of Information Act (''FOIA''), 5 U.S.C. 552, as amended. Information customarily furnished to the public in the regular course of the Corporation's official business, whether hard copy or electronic records which are available to the public through an established distribution system, or through the **Federal Register**, the National Technical Information Service, or the Internet, may continue to be furnished without processing under the provisions of the FOIA or complying with this part.

§ 2507.3 What types of records are available for disclosure to the public?

(a) (1) The Corporation will make available to any member of the public who requests them, the following Corporation records:

(i) All publications and other documents provided by the Corporation to the public in the normal course of agency business will continue to be made available upon request to the Corporation;

(ii) Final opinions, including concurring and dissenting opinions, as well as orders, made in the adjudication of administrative cases;

(iii) Statements of policy and interpretation adopted by the agency and not published in the **Federal Register**;

(iv) Administrative staff manuals and instructions to the staff that affect a member of the public; and

(v) Copies of all records, regardless of form or format, which, because of the nature of their subject matter, the agency determines have become or are likely to become the subject of subsequent requests for substantially the same records.

(2) Copies of a current index of the materials in paragraphs (a)(1)(i) through (v) of this section that are maintained by the Corporation, or any portion thereof, will be furnished or made available for inspection upon request.

(b) To the extent necessary to prevent a clearly unwarranted invasion of personal privacy, the Corporation may delete identifying details from materials furnished under this part.

(c) Brochures, leaflets, and other similar published materials shall be furnished to the public on request to the extent they are available. Copies of any such materials which are out of print shall be furnished to the public at the cost of duplication, provided, however, that, in the event no copy exists, the Corporation shall not be responsible for reprinting the document.

(d) All records of the Corporation which are requested by a member of the public in accordance with the procedures established in this part shall be duplicated for the requester, except to the extent that the Corporation determines that such records are exempt from disclosure under the Act.

(e) The Corporation will not be required to create new records, compile lists of selected items from its files, or provide a requester with statistical or other data (unless such data has been compiled previously and is available in the form of a record.)

(f) These records will be made available for public inspection and copying in the Corporation's reading room located at the Corporation for National and Community Service, 1201 New York Avenue, NW., Room 8200, Washington, D.C. 20525, during the hours of 9:30 a.m. to 4:00 p.m., Monday through Friday, except on official holidays.

(g) Corporation records will be made available to the public unless it is determined that such records should be withheld from disclosure under subsection 552(b) of the Act and or in accordance with this part.

§ 2507.4 How are requests for records made?

(a) *How made and addressed.* (1) Requests for Corporation records under the Act must be made in writing, and can be mailed, hand-delivered, or received by facsimile, to the FOIA Officer, Corporation for National and Community Service, Office of the

General Counsel, 1201 New York Avenue, N.W., Room 8200, Washington, D.C. 20525. (See Appendix A for an example of a FOIA request.) All such requests, and the envelopes in which they are sent, must be plainly marked ''FOIA Request''. Hand-delivered requests will be received between 9 a.m. and 4 p.m., Monday through Friday, except on official holidays. Although the Corporation maintains offices throughout the continental United States, all FOIA requests must be submitted to the Corporation's Headquarters office in Washington, DC.

(2) Corporation records that are available in the Corporation's reading room will also be made available for public access through the Corporation's ''electronic reading room'' internet site under ''Resource Links''. The following address is the Corporation's Internet Web site: http://www.nationalservice.org.

(b) *Request must adequately describe the records sought.* A request must describe the records sought in sufficient detail to enable Corporation personnel to locate the records with reasonable effort, and without unreasonable burden to or disruption of Corporation operations. Among the kinds of identifying information which a requester may provide are the following:

(1) The name of the specific program within the Corporation which may have produced or may have custody of the record (e.g., AmeriCorps*State/National Direct, AmeriCorps*NCCC (National Civilian Community Corps), AmeriCorps*VISTA (Volunteers In Service To America), Learn and Serve America, National Senior Service Corps (NSSC), Retired and Senior Volunteer Program (RSVP), Foster Grandparent Program (FGP), Senior Companion Program (SCP), and HUD Hope VI);

(2) The specific event or action, if any, to which the record pertains;

(3) The date of the record, or an approximate time period to which it refers or relates;

(4) The type of record (e.g. contract, grant or report);

(5) The name(s) of Corporation personnel who may have prepared or been referenced in the record; and

(6) Citation to newspapers or other publications which refer to the record.

(c) *Agreement to pay fees.* The filing of a request under this section shall be deemed to constitute an agreement by the requester to pay all applicable fees, up to $25.00, unless a waiver of fees is sought in the request letter. When filing a request, a requester may agree to pay a greater amount, if applicable. (See § 2507.8 for further information on fees.)

§ 2507.5 How does the Corporation process requests for records?

(a) *Initial processing.* Upon receipt of a request for agency records, the FOIA Officer will make an initial determination as to whether the requester has reasonably described the records being sought with sufficient specificity to determine which Corporation office may have possession of the requested records. The office head or his or her designees shall determine whether the description of the record(s) requested is sufficient to permit a determination as to existence, identification, and location. It is the responsibility of the FOIA Officer to provide guidance and assistance to the Corporation staff regarding all FOIA policies and procedures. All requests for records under the control and jurisdiction of the Office of the Inspector General will be forwarded to the Inspector General, through the FOIA Officer, for the Corporation's initial determination and reply to the requester.

(b) *Insufficiently identified records.* On making a determination that the description contained in the request does not reasonably describe the records being sought, the FOIA Officer shall promptly advise the requester in writing or by telephone if possible. The FOIA Officer shall provide the requester with appropriate assistance to help the requester provide any additional information which would better identify the record. The requester may submit an amended request providing the necessary additional identifying information. Receipt of an amended request shall start a new 20 day period in which the Corporation will respond to the request.

(c) *Furnishing records.* The Corporation is required to furnish only copies of what it has or can retrieve. It is not compelled to create new records or do statistical computations. For example, the Corporation is not required to write a new program so that a computer will print information in a special format. However, if the requested information is maintained in computerized form, and it is possible, without inconvenience or unreasonable burden, to produce the information on paper, the Corporation will do this if this is the only feasible way to respond to a request. The Corporation is not required to perform any research for the requester. The Corporation reserves the right to make a decision to conserve government resources and at the same time supply the records requested by consolidating information from various records rather than duplicating all of them. For example, if it requires less time and expense to provide a computer record as a paper printout rather than in an electronic medium, the Corporation will provide the printout. The Corporation is only required to furnish one copy of a record.

(d) *Format of the disclosure of a record.* The requester, not the Corporation, will be entitled to choose the form of disclosure when multiple forms of a record already exist. Any further request for a record to be disclosed in a new form or format will have to be considered by the Corporation, on a case-by-case basis, to determine whether the records are ''readily reproducible'' in that form or format with ''reasonable efforts'' on the part of the Corporation. The Corporation shall make reasonable efforts to maintain its records in forms or formats that are reproducible for purposes of replying to a FOIA request.

(e) *Release of record.* Upon receipt of a request specifically identifying existing Corporation records, the Corporation shall, within 20 days (excepting Saturdays, Sundays, and legal public holidays), either grant or deny the request in whole or in part, as provided in this section. Any notice of denial in whole or in part shall require the FOIA Officer to inform the requester of his/her right to appeal the denial, in accordance with the procedures set forth in § 2507.7. If the FOIA Officer determines that a request describes a requested record sufficiently to permit its identification, he/she shall make it available unless he/she determines, as appropriate, to withhold the record as being exempt from mandatory disclosure under the Act.

(f) *Form and content of notice granting a request.* The Corporation shall provide written notice of a determination to grant access within 20 days (excepting Saturdays, Sundays, and legal public holidays) of receipt of the request. This will be done either by providing a copy of the record to the requester or by making the record available for inspection at a reasonable time and place. If the record cannot be provided at the time of the initial response, the Corporation shall make such records available promptly. Records disclosed in part shall be marked or annotated to show both the amount and the location of the information deleted wherever practicable.

(g) *Form and content of notice denying request.* The Corporation shall notify the requester in writing of the denial of access within 20 days (excepting Saturdays, Sundays, and legal public holidays) of receipt of the request. Such notice shall include:

(1) The name and title or position of the person responsible for the denial;

(2) A brief statement of the reason(s) for denial, including the specific exemption(s) under the Act on which the Corporation has relied in denying each document that was requested;

(3) A statement that the denial may be appealed under § 2507.7, and a description of the requirements of that § 2507.7;

(4) An estimate of the volume of records or information withheld, in number of pages or in some other reasonable form of estimation. This estimate does not need to be provided if the volume is otherwise indicated through deletions on records disclosed in part, or if providing an estimate would harm an interest protected by an applicable exemption.

§ 2507.6 Under what circumstances may the Corporation extend the time limits for an initial response?

The time limits specified for the Corporation's initial response in § 2507.5, and for its determination on an appeal in § 2507.7, may be extended by the Corporation upon written notice to the requester which sets forth the reasons for such extension and the date upon which the Corporation will respond to the request. Such extension may be applied at either the initial response stage or the appeal stage, or both, provided the aggregate of such extensions shall not exceed ten working days. Circumstances justifying an extension under this section may include the following:

(a) Time necessary to search for and collect requested records from field offices of the Corporation;

(b) Time necessary to locate, collect and review voluminous records; or

(c) Time necessary for consultation with another agency having an interest in the request; or among two or more offices of the Corporation which have an interest in the request; or with a submitter of business information having an interest in the request.

§ 2507.7 How does one appeal the Corporation's denial of access to records?

(a) *Right of appeal.* A requester has the right to appeal a partial or full denial of an FOIA request. The appeal must be put in writing and sent to the reviewing official identified in the denial letter. The requester must send the appeal within 60 days of the letter denying the appeal.

(b) *Contents of appeal.* The written appeal may include as much or as little information as the requester wishes for the basis of the appeal.

(c) *Review process.* The Chief Operating Officer (COO) is the designated official to act on all FOIA appeals. The COO's determination of an appeal constitutes the Corporation's final action. If the appeal is granted, in whole or in part, the records will be made available for inspection or sent to the requester, promptly, unless a reasonable delay is justified. If the appeal is denied, in whole or in part, the COO will state the reasons for the decision in writing, providing notice of the right to judicial review. A decision will be made on the appeal within 20 days (excepting Saturdays, Sundays, and legal public holidays), from the date the appeal was received by the COO.

(d) *When appeal is required.* If a requester wishes to seek review by a court of an unfavorable determination, an appeal must first be submitted under this section.

§ 2507.8 How are fees determined?

(a) *Policy.* It is the policy of the Corporation to provide the widest possible access to releasable Corporation records at the least possible cost. The purpose of the request is relevant to the fees charged.

(b) *Types of request.* Fees will be determined by category of requests as follows:

(1) *Commercial use requests.* When a request for records is made for commercial use, charges will be assessed to cover the costs of searching for, reviewing for release, and reproducing the records sought.

(2) *Requests for educational and non-commercial scientific institutions.* When a request for records is made by an educational or non-commercial scientific institution in furtherance of scholarly or scientific research, respectively, charges may be assessed to cover the cost of reproduction alone, excluding charges for reproduction of the first 100 pages. Whenever the total fee calculated is $18.00 or less, no fee shall be charged.

(3) *Requests from representatives of the news media.* When a request for records is made by a representative of the news media for the purpose of news dissemination, charges may be assessed to cover the cost of reproduction alone, excluding the charges for reproduction of the first 100 pages. Whenever the total fee calculated is $18.00 or less, no fee shall be charged.

(4) *Other requests.* When other requests for records are made which do not fit the three preceding categories, charges will be assessed to cover the costs of searching for and reproducing the records sought, excluding charges for the first two hours of search time and for reproduction of the first 100 pages. (However, requests from individuals for records about themselves contained in the Agency's systems of records will be treated under the fee provisions of the Privacy Act of 1974 (5 U.S.C. 552a) which permit the assessment of fees for reproduction costs only, regardless of the requester's characterization of the request.) Whenever the total fee calculated is $18.00 or less, no fee shall be charged to the requester.

(c) *Direct costs.* Fees assessed shall provide only for recovery of the Corporation's direct costs of search, review, and reproduction. Review costs shall include only the direct costs incurred during the initial examination of a record for the purposes of determining whether a record must be disclosed under this part and whether any portion of a record is exempt from disclosure under this part. Review costs shall not include any costs incurred in resolving legal or policy issues raised in the course of processing a request or an appeal under this part.

(d) *Charging of fees.* The following charges may be assessed for copies of records provided to a requester:

(1) Copies made by photostat shall be charged at the rate of $0.10 per page.

(2) Searches for requested records performed by clerical/administrative personnel shall be charged at the rate of $4.00 per quarter hour.

(3) Where a search for requested records cannot be performed by clerical administrative personnel (for example, where the tasks of identifying and compiling records responsive to a request must be performed by a skilled technician or professional), such search shall be charged at the rate of $7.00 per quarter hour.

(4) Where the time of managerial personnel is required, the fee shall be $10.25 for each quarter hour of time spent by such managerial personnel.

(5) Computer searches for requested records shall be charged at a rate commensurate with the combined cost of computer operation and operator's salary attributable to the search.

(6) *Charges for non-release.* Charges may be assessed for search and review time, even if the Corporation fails to locate records responsive to a request or if records located are determined to be exempt from disclosure.

(e) *Consent to pay fees.* In the event that a request for records does not state that the requester will pay all reasonable costs, or costs up to a specified dollar amount, and the FOIA Officer determines that the anticipated assessable costs for search, review and reproduction of requested records will exceed $25.00, or will exceed the limit specified in the request, the requester

shall be promptly notified in writing. Such notification shall state the anticipated assessable costs of search, review and reproduction of records requested. The requester shall be afforded an opportunity to amend the request to narrow the scope of the request, or, alternatively, may agree to be responsible for paying the anticipated costs. Such a request shall be deemed to have been received by the Corporation upon the date of receipt of the amended request.

(f) *Advance payment.* (1) Advance payment of assessable fees are not required from a requester unless:

(i) The Corporation estimates or determines that assessable charges are likely to exceed $250.00, and the requester has no history of payment of FOIA fees. (Where the requester has a history of prompt payment of fees, the Corporation shall notify the requester of the likely cost and obtain written assurance of full payment.)

(ii) A requester has previously failed to pay a FOIA fee charged in a timely fashion (i.e., within 30 days of the date of the billing).

(2) When the Corporation acts under paragraphs (f)(1)(i) or (ii) of this section, the administrative time limits prescribed in § 2507.5(a) and (b) will begin to run only after the Corporation has received fee payments or assurances.

(g) *Interest on non-payment.* Interest charges on an unpaid bill may be assessed starting on the 31st day following the day on which the billing was sent. Interest will be assessed at the rate prescribed in 31 U.S.C. 3717 and will accrue from the date of the billing. The Corporation may use the authorization of the Debt Collection Act of 1982 (Pub. L. 97–365, 96 Stat. 1749), as amended, and its administrative procedures, including disclosure to consumer reporting agencies and the use of collection agencies, to encourage payment of delinquent fees.

(h) *Aggregating requests.* Where the Corporation reasonably believes that a requester or a group of requesters acting together is attempting to divide a request into a series of requests for the purpose of avoiding fees, the Corporation may aggregate those requests and charge accordingly. The Corporation may presume that multiple requests of this type made within a 30-day period have been made in order to avoid fees. Where requests are separated by a longer period, the Corporation will aggregate them only where there exists a solid basis for determining that aggregation is warranted under the circumstances involved. Multiple requests involving unrelated matters will not be aggregated.

(i) *Making payment.* Payment of fees shall be forwarded to the FOIA Officer by check or money order payable to ''Corporation for National and Community Service''. A receipt for any fees paid will be provided upon written request.

(j) *Fee processing.* No fee shall be charged if the administrative costs of collection and processing of such fees are equal to or do not exceed the amount of the fee.

(k) *Waiver or reduction of fees.* A requester may, in the original request, or subsequently, apply for a waiver or reduction of document search, review and reproduction fees. Such application shall be in writing, and shall set forth in detail the reason(s) a fee waiver or reduction should be granted. The amount of any reduction requested shall be specified in the request. Upon receipt of such a request, the FOIA Officer will determine whether a fee waiver or reduction should be granted.

(1) A waiver or reduction of fees shall be granted only if release of the requested information to the requester is in the public interest because it is likely to contribute significantly to public understanding of the operations or activities of the Corporation, and it is not primarily in the commercial interest of the requester. The Corporation shall consider the following factors in determining whether a waiver or reduction of fees will be granted:

(i) Does the requested information concern the operations or activities of the Corporation?

(ii) If so, will disclosure of the information be likely to contribute to public understanding of the Corporation's operations and activities?

(iii) If so, would such a contribution be significant?

(iv) Does the requester have a commercial interest that would be furthered by disclosure of the information?

(v) If so, is the magnitude of the identified commercial interest of the requester sufficiently large, in comparison with the public interest in disclosure, that disclosure is primarily in the commercial interest of the requester?

(2) In applying the criteria in paragraph (k)(1) of this section, the Corporation will weigh the requester's commercial interest against any public interest in disclosure. Where there is a public interest in disclosure, and that interest can fairly be regarded as being of greater magnitude than the requester's commercial interest, a fee waiver or reduction may be granted.

(3) When a fee waiver application has been included in a request for records, the request shall not be considered officially received until a determination is made regarding the fee waiver application. Such determination shall be made within five working days from the date any such request is received in writing by the Corporation.

§ 2507.9 What records will be denied disclosure under this part?

Since the policy of the Corporation is to make the maximum amount of information available to the public consistent with its other responsibilities, written requests for a Corporation record made under the provisions of the FOIA may be denied when:

(a) The record is subject to one or more of the exemptions of the FOIA.

(b) The record has not been described clearly enough to enable the Corporation staff to locate it within a reasonable amount of effort by an employee familiar with the files.

(c) The requestor has failed to comply with the procedural requirements, including the agreement to pay any required fee.

(d) For other reasons as required by law, rule, regulation or policy.

§ 2507.10 What records are specifically exempt from disclosure?

Any reasonably segregable portion of a record shall be provided to any person requesting such record after deletion of portions which are exempt under this section. The following categories are examples of records maintained by the Corporation which, under the provision of 5 U.S.C. 552(b), are exempted from disclosure:

(a) *Records required to be withheld under criteria established by an Executive Order in the interest of national defense and policy and which are in fact properly classified pursuant to any such Executive Order.* Included in this category are records required by Executive Order No. 12958 (3 CFR, 1995 Comp., p. 333), as amended, to be classified in the interest of national defense or foreign policy.

(b) *Records related solely to internal personnel rules and practices.* Included in this category are internal rules and regulations relating to personnel management operations which cannot be disclosed to the public without substantial prejudice to the effective performance of significant functions of the Corporation.

(c) Records specifically exempted from disclosure by statute.

(d) *Information of a commercial or financial nature including trade secrets*

given in confidence. Included in this category are records containing commercial or financial information obtained from any person and customarily regarded as privileged and confidential by the person from whom they were obtained.

(e) *Interagency or intra-agency memoranda or letters which would not be available by law to a party other than a party in litigation with the Corporation.* Included in this category are memoranda, letters, inter-agency and intra-agency communications and internal drafts, opinions and interpretations prepared by staff or consultants and records meant to be used as part of deliberations by staff, or ordinarily used in arriving at policy determinations and decisions.

(f) *Personnel, medical and similar files.* Included in this category are personnel and medical information files of staff, individual national service applicants and participants, lists of names and home addresses, and other files or material containing private or personal information, the public disclosure of which would amount to a clearly unwarranted invasion of the privacy of any person to whom the information pertains.

(g) *Investigatory files.* Included in this category are files compiled for the enforcement of all laws, or prepared in connection with government litigation and adjudicative proceedings, provided however, that such records shall be made available to the extent that their production will not:

(1) Interfere with enforcement proceedings;

(2) Deprive a person of a right to a fair trial or an impartial adjudication;

(3) Constitute an unwarranted invasion of personal privacy;

(4) Disclose the identity of a confidential source, and in the case of a record compiled by a criminal law enforcement authority in the course of a criminal investigation, or by an agency conducting a lawful security intelligence investigation, confidential information furnished by confidential source;

(5) Disclose investigative techniques and procedures; or

(6) Endanger the life or physical safety of law enforcement personnel.

§ 2507.11 What are the procedures for the release of commercial business information?

(a) *Notification of business submitter.* The Corporation shall promptly notify a business submitter of any request for Corporation records containing business information. The notice shall either specifically describe the nature of the business information requested or provide copies of the records, or portions thereof containing the business information.

(b) *Business submitter reply.* The Corporation shall afford a business submitter 10 working days to object to disclosure, and to provide the Corporation with a written statement specifying the grounds and arguments why the information should be withheld under Exemption (b)(4) of the Act.

(c) *Considering and balancing respective interests.* (1) The Corporation shall carefully consider and balance the business submitter's objections and specific grounds for nondisclosure against such factors as:

(i) The general custom or usage in the occupation or business to which the information relates that it be held confidential; and

(ii) The number and situation of the individuals who have access to such information; and

(iii) The type and degree of risk of financial injury to be expected if disclosure occurs; and

(iv) The length of time such information should be regarded as retaining the characteristics noted in paragraphs (c)(1) (i) through (iii) of this section in determining whether to release the requested business information.

(2)(i) Whenever the Corporation decides to disclose business information over the objection of a business submitter, the Corporation shall forward to the business submitter a written notice of such decision, which shall include:

(A) The name, and title or position, of the person responsible for denying the submitter's objection;

(B) A statement of the reasons why the business submitter's objection was not sustained;

(C) A description of the business information to be disclosed; and

(D) A specific disclosure date.

(ii) The notice of intent to disclose business information shall be mailed by the Corporation not less than six working days prior to the date upon which disclosure will occur, with a copy of such notice to the requester.

(d) *When notice to business submitter is not required.* The notice to business submitter shall not apply if:

(1) The Corporation determines that the information shall not be disclosed;

(2) The information has previously been published or otherwise lawfully been made available to the public; or

(3) Disclosure of the information is required by law (other than 5 U.S.C. 552).

(e) *Notice of suit for release.* Whenever a requester brings suit to compel disclosure of business information, the Corporation shall promptly notify the business submitter.

§ 2507.12 Authority.

The Corporation receives authority to change its governing regulations from the National and Community Service Act of 1990, as amended (42 U.S.C. 12501 et seq.).

Appendix A to Part 2507—Freedom of Information Act Request Letter (Sample)

Freedom of Information Act Officer _____
Name of Agency _____
Address of Agency _____
City, State, Zip Code _____

Re: Freedom of Information Act Request.

Dear_____: This is a request under the Freedom of Information Act.

I request that a copy of the following documents [or documents containing the following information] be provided to me: [identify the documents or information as specifically as possible].

[Sample requester descriptions]

—A representative of the news media affiliated with the _____ newspaper (magazine, television station, etc.) and this request is made as part of news gathering and not for commercial use.

—Affiliated with an educational or non-commercial scientific institution, and this request is not for commercial use.

—An individual seeking information for personal use and not for commercial use.

—Affiliated with a private corporation and am seeking information for use in the company's business.

[Optional] I am willing to pay fees for this request up to a maximum of $_____. If you estimate that the fees will exceed this limit, please inform me first.

[Optional] I request a waiver of all fees for this request. Disclosure of the requested information to me is in the public interest because it is likely to contribute significantly to public understanding of the operations or activities of government and is not primarily in my commercial interest. [Include a specific explanation.]

In order to help you determine my status to assess fees, you should know that I am (insert a suitable description of the requester and the purpose of the request).

Thank you for your consideration of this request.

Sincerely,

Name _____
Address _____
City, State, Zip Code _____
Telephone Number [Optional] _____

Appendix B to Part 2507—Freedom of Information Act Appeal for Release of Information (Sample)

Appeal Officer _____
Name of Agency _____
Address of Agency _____
City, State, Zip Code _____

Re: Freedom of Information Act Appeal.

Dear_____: This is an appeal under the Freedom of Information Act.

On (date), I requested documents under the Freedom of Information Act. My request was assigned the following identification number _____. On (date), I received a response to my request in a letter signed by (name of official). I appeal the denial of my request.

[Optional] The documents that were withheld must be disclosed under the FOIA because * * *.

[Optional] *Respond for waiver of fees.* I appeal the decision to deny my request for a waiver of fees. I believe that I am entitled to a waiver of fees. Disclosure of the documents I requested is in the public interest because the information is likely to contribute significantly to public understanding of the operation or activities of government and is not primarily in my commercial interest. (Provide details)

[Optional] I appeal the decision to require me to pay review costs for this request. I am not seeking the documents for a commercial use. (Provide details)

(Optional] I appeal the decision to require me to pay search charges for this request. I am a reporter seeking information as part of news gathering and not for commercial use.

Thank you for your consideration of this appeal.

Sincerely,

Name _____

Address _____

City, State, Zip Code _____

Telephone Number [Optional] _____

Dated: May 8, 1998.

Kenneth L. Klothen,

General Counsel.

[FR Doc. 98–12650 Filed 5–12–98; 8:45 am]

BILLING CODE 6050–28–P

FEDERAL COMMUNICATIONS COMMISSION

47 CFR Part 69

[CC Docket 96–128; DA 98–701]

Implementation of the Pay Telephone Reclassification and Compensation Provisions of the Telecommunications Act of 1996; AT&T Request for Limited Waiver of the Per-Call Compensation Obligation

AGENCY: Federal Communications Commission.

ACTION: Final rule; clarification and waivers.

SUMMARY: The Common Carrier Bureau adopted an Order (''Order''), which clarifies certain requirements set forth in the *Per-phone Compensation Waiver Order.* The *Order* clarifies the following: the data to be used for the payment of payphone compensation for the fourth quarter of 1997 and first quarter of 1998 for payphones that are not capable of providing payphone-specific coding digits; the method for allocating among payors the payphone compensation requirements for payphones served by non-equal access switches; and the eligibility of payphones on automatic number identification (''ANI'') lists.

DATES: Effective April 10, 1998.

FOR FURTHER INFORMATION CONTACT: Rose Crellin, Formal Complaints and Investigations Branch, Enforcement Division, Common Carrier Bureau, (202) 418–0960.

SUPPLEMENTARY INFORMATION: This is a summary of the Bureau's Order in CC Docket No. 96–128 [DA 98–701], adopted on April 10, 1998, and released on April 10, 1998. The full text of the *Order* is available for inspection and copying during normal business hours in the FCC Reference Center, Room 239, 1919 M Street, N.W., Washington, D.C. The complete text of this decision also may be purchased from the Commission's duplicating contractor, International Transcription Services, 1231 20th Street, N.W., Washington, D.C. 20036.

SUMMARY OF ORDER

Introduction

1. In the *Order,* the Bureau clarifies certain requirements set forth in the *Per-phone Compensation Waiver Order,*[1] published elsewhere in this issue of the **Federal Register**, which was adopted on April 3, 1998, by the Common Carrier Bureau (''Bureau''). The *Per-phone Compensation Waiver Order* granted interexchange carriers (''IXCs'') a limited waiver of the payphone compensation requirements set forth in the *Payphone Orders*[2] to enable IXCs to pay to payphone service providers (''PSPs'') per-phone instead of per-call compensation for subscriber 800 and access code calls originated from payphones when payphone-specific coding digits[3] are not available from those payphones. The Bureau's *Order* clarifies the following: (1) The data to be used for the payment of payphone compensation for the fourth quarter of 1997 and first quarter of 1998 for payphones that are not capable of providing payphone-specific coding digits; (2) the method for allocating among payors the payphone compensation requirements for payphones served by non-equal access switches; and (3) the eligibility of payphones on automatic number identification (''ANI'') lists.

II. Background

2. In the *Per-phone Compensation Waiver Order,* the Bureau concluded that the waiver granted therein to allow IXCs to pay per-phone compensation when payphone-specific coding digits are not available from a payphone is necessary to ensure that PSPs receive fair compensation while local exchange carriers (''LECs''), PSPs, and IXCs transition to providing and receiving payphone-specific coding digits to identify calls from payphones.

3. Previously, the Bureau had adopted the *Bureau Coding Digit Waiver Order* clarifying the payphone-specific coding digit requirements set forth in the *Payphone Orders* and granting limited waivers of the requirement that LECs provide payphone-specific-coding digits to PSPs, and that PSPs provide payphone-specific coding digits from their payphones to IXCs, before PSPs can receive per-call compensation from IXCs for subscriber 800 and access code calls. The Bureau explained in the *Per-phone Compensation Waiver Order* that the order serves as a companion order to the *Bureau Coding Digit Waiver Order,* because in the *Per-phone Compensation Waiver Order,* the Bureau granted IXCs[4] a waiver of the per-call compensation requirement so they may pay per-phone instead of per-call

[1] Implementation of the Pay Telephone Reclassification and Compensation Provisions of the Telecommunications Act of 1996, Memorandum Opinion and Order, DA 98–642 (rel. Apr. 3, 1998) (''Per-phone Compensation Waiver Order'').

[2] Implementation of the Pay Telephone Reclassification and Compensation Provisions of the Telecommunications Act of 1996, CC Docket No. 96–128, Report and Order, 61 FR 52307 (October 7, 1996) (''Report and Order''); Order on Reconsideration, 61 FR 65341 (December 12, 1996) (''Order on Reconsideration'') (together the ''Payphone Orders''). The Payphone Orders were affirmed in part and vacated in part. See Illinois Public Telecomm. Ass'n v. FCC, 117 F.3d 555 (D.C. Cir. 1997) (''Illinois Public Telecomm.''); see also Second Report and Order, 13 FCC Rcd 1778 (1997) (''Second Report and Order''), pets. for recon. pending, review pending, MCI Telecomm. Corp. v. FCC, D.C. Circuit No. 97–1675 (filed Nov. 7, 1997); Sprint Corp. v. FCC, D.C. Circuit No. 97–1685 (filed Nov. 13, 1997); Personal Communications Industry Association v. FCC, D.C. Circuit No. 97–1709 (filed Dec. 1, 1997); Illinois Public Telecommunications Association v. FCC, D.C. Circuit No. 97–1713 (filed Dec. 3, 1997).

[3] Payphone-specific coding digits provide a method for LECs to transmit, with the automatic number identification (ANI), information (coding number or digits) identifying a call as having been placed specifically from a payphone. Order on Reconsideration, 11 FCC Rcd 21,265–66, para. 64. See Implementation of the Pay Telephone Reclassification and Compensation Provisions of the Telecommunications Act of 1996, Memorandum Opinion and Order, CC Docket No. 96–128, DA 98–481 (rel. Mar. 9, 1998) 63 FR 20534 (April 27, 1998) (''Bureau Coding Digit Waiver Order'').

[4] For purposes of paying compensation for compensable calls and other associated obligations, such as tracking calls, we note that the term ''IXC'' includes an LEC when it provides interstate, intraLATA toll service. See Report and Order, 61 FR 52307 (October 7, 1996); Order on Reconsideration, 11 FCC Rcd at 21,270, paras. 74–75 & 21,278, para. 92. Carriers required to pay per-call compensation pursuant to the Payphone Orders also are referred to as ''payors'' in this order.

compensation for the payphones for which the Bureau granted waivers in the *Bureau Waiver Order*[5] and the *Bureau Coding Digit Waiver Order.*

III. Discussion

A. Payphone Compensation Payments

4. The *Bureau Coding Digit Waiver Order* required that payments for payphone compensation be remitted at least on a quarterly basis. That order required that the payment for the October 1997 through December 31, 1997 period be paid no later than April 1, 1998. The Bureau stated in the *Per-phone Waiver Order* that because some IXCs will have to obtain additional information and calculate their per-phone compensation amounts, these IXCs may need additional time to make the payments to PSPs for the October 1997 through December 31, 1997 period for payphone compensation. Thus, the order stated that IXCs may make this payment no later than April 30, 1998, but must include additional interest for the period after April 1, 1998, at the rate of 11.25 percent simple interest per year, if the payment was not made by April 1, 1998.

5. In the *Per-phone Waiver Order,* the Bureau required that pursuant to the waiver granted therein, with the exception of the compensation method for those payphones that are able to provide payphone-specific coding digits, IXCs must use call volume information obtained from October 1997 through March 31, 1998 (the ''sample period''), to establish average subscriber 800 and access code call volumes per-phone to compensate PSPs for calls originated from their payphones during the fourth quarter of 1997 and the first quarter of 1998 (from October 7, 1997 through March 31, 1998). In the *Order,* the Bureau clarifies that if calculating the average call volumes using the six-month ''sample period'' of data will delay payment for the fourth quarter of 1997 beyond the deadline set forth in that order, IXCs must compensate PSPs for the fourth quarter of 1997 based on data from the fourth quarter of 1997, and compensate PSPs for the first quarter of 1998 based on data from the first quarter of 1998 using the same methodology specified in the *Per-phone Waiver Order* but revised to accommodate a three-month rather than a six-month period of call volume and payphone information.

B. Payphone Compensation for Payphones Served by Non-Equal Access Switches

6. In the *Per-phone Waiver Order,* the Bureau stated that payphones served by non-equal access switches must be compensated for 16 calls per-phone per month, until payphone-specific coding digits are available for those payphones. Because the number of payphones on non-equal access switches and the number of calls for which such payphones should be compensated is small, the Bureau finds it is appropriate to allocate compensation obligations for these payphones among payors in a different manner than other payphones. Therefore, per-phone compensation for PSP payphones served by non-equal access switches will be based on call distribution data submitted to the Commission by the LEC Coalition. The LEC Coalition provided data from three Bell Operating Companies (''BOCs'') in an aggregated form illustrating the average calls per-phone per month, and the percentage of average calls per month of the total calls received by each payor. The Bureau finds, however, compensation due to PSP payphones served by non-equal access switches should be allocated among the top ten carriers receiving the highest amount of subscriber 800 and access code calls as indicated by the LEC Coalition data, because the number of calls for which compensation is due is so small. Were the Bureau to require all carriers to compensate payphones served by non-equal access switches, many carriers would be forced to compensate PSPs for mere fractions of calls.

7. Therefore, to compensate PSPs for payphones served by non-equal access switches, each IXC listed in the *Order* will multiply its percentage of average calls per month total as stated in the LEC Coalition data by 16 calls per-phone per month.[6] That number is the average number of calls for which that carrier must compensate the PSP for payphones served by non-equal access switches. That number will then be multiplied by three, to determine the quarterly call volume, and then by $0.284 to determine the amount owed.

8. The Bureau finds that the LEC Coalition data is an appropriate basis upon which to allocate compensation for payphones served by non-equal access switches because the compensation due is small. Notwithstanding the Bureau's decision in the *Per-phone Waiver Order* that this data is not appropriate to assess compensation obligations for all payphones, here this data is representative of the number of compensable calls made from payphones on non-equal access switches and is appropriate for allocating each carrier's share of compensation obligations. Therefore, the concerns raised in reference to using this data as a compensation method for all payphones are not present here.

C. Payphones on the ANI List

9. In the *Per-phone Waiver Order,* the Bureau stated that payphones can receive compensation only for those months that they were in service. The *Bureau Waiver Order* stated that payphones appearing on the LEC-provided lists of payphones are eligible for per-call compensation even if they do not transmit payphone-specific coding digits. The Bureau clarifies that as stated in the *Bureau Waiver Order,* for payphones that do not provide payphone-specific coding digits, payors must look to the ANI lists to determine which payphones[7] are eligible for compensation. Prior to the *Bureau Coding Digit Waiver Order,* LECs were required to provide ANI lists on a quarterly basis. That order required that LECs make available on request monthly ANI lists. Thus, for the fourth quarter of 1997 and the first quarter of 1998, payors must use quarterly ANI lists. Thereafter, payors must use the monthly ANI lists that payors can obtain from LECs. If there are disputes between IXCs and PSPs regarding whether certain payphones were in service during a specific period even if they are on the ANI lists, such disputes should not be a basis for delay of payphone compensation payments.

IV. Conclusion and Ordering Clauses

10. The Bureau concluded in the *Order* that the clarifications to the *Per-phone Compensation Waiver Order* are in the public interest, because they will further the goals of Section 276 of the Act, and that PSPs should be compensated for each and every completed call and will ease the transition to per-call compensation.

11. Accordingly, pursuant to authority contained in Sections 1, 4, 201–205, 218, 226, and 276 of the Communications Act of 1934, as amended, 47 U.S.C. 151, 154, 201–205, 218, 226, and 276, and the authority delegated by §§ 0.91 and 0.291 of the

[5] Implementation of the Pay Telephone Reclassification and Compensation Provisions of the Telecommunications Act of 1996, 62 FR 58659, (October 30, 1997) (''Bureau Waiver Order'').

[6] The LEC Coalition data indicates the following percentage allocation: (1) AT&T: 37.08%; (2) MCI: 25.33%; (3) WorldCom: 12.17%; (4) Sprint: 10.76%; (5) LCI: 2.83%; (6) Frontier: 2.75%; (7) BOC weighted average: 2.19%; (8) Allnet Dial 1 Service: 1.14%; (9) Cable & Wireless: 0.95%; (10) Switched Services: 0.63%. *Id.*

[7] Bureau Waiver Order, 12 FCC Rcd at 16,390–91, paras. 9–14.

Commission's rules, 47 C.F.R. 0.91, 0.291, the policies and requirements set forth in the payphone proceeding and the *Per-phone Compensation Waiver Order* are clarified.

Federal Communications Commission.

Robert W. Spangler,

Acting Chief, Enforcement Division, Common Carrier Bureau.

[FR Doc. 98–12346 Filed 5–12–98; 8:45 am]

BILLING CODE 6712–01–U

FEDERAL COMMUNICATIONS COMMISSION

47 CFR Part 69

[CC Docket 96–128; DA 98–642]

Implementation of the Pay Telephone Reclassification and Compensation Provisions of the Telecommunications Act of 1996; AT&T Request for Limited Waiver of the Per-Call Compensation Obligation

AGENCY: Federal Communications Commission.

ACTION: Final rule; clarification and waivers

SUMMARY: The Common Carrier Bureau adopted a Memorandum Opinion and Order (''Order''), which grants interexchange carriers (''IXCs'') a waiver of the payphone compensation requirements of the *Payphone Orders* to enable them to pay to payphone service providers (''PSPs'') per-phone instead of per-call compensation for subscriber 800 and access code calls from payphones when payphone-specific coding digits are not available from those payphones. The Order also serves as a companion to the *Bureau Coding Digit Waiver Order,* because in the Order the Bureau grants IXCs a waiver of the per-call compensation requirement so they may pay per-phone instead of per-call compensation for the payphones for which the Bureau granted waivers in the *Bureau Waiver Order* and the *Bureau Coding Digit Waiver Order.*

DATES: Effective April 3, 1998.

FOR FURTHER INFORMATION CONTACT: Rose Crellin, Formal Complaints and Investigations Branch, Enforcement Division, Common Carrier Bureau, (202) 418–0960.

SUPPLEMENTARY INFORMATION: This is a summary of the Bureau's Memorandum Opinion and Order in CC Docket No. 96–128 [DA 98–642], adopted on April 3, 1998, and released on April 3, 1998. The full text of the Memorandum Opinion and Order (''Order'') is available for inspection and copying during normal business hours in the FCC Reference Center, Room 239, 1919 M Street, N.W., Washington, D.C. The complete text of this decision also may be purchased from the Commission's duplicating contractor, International Transcription Services, 1231 20th Street, N.W., Washington, D.C. 20036.

MEMORANDUM OPINION AND ORDER

I. Introduction

1. In the *Order,* the Common Carrier Bureau (''Bureau'') grants interexchange carriers (''IXCs'') a waiver of the payphone compensation requirements of the *Payphone Orders* [1] to enable them to pay to payphone service providers (''PSPs'') per-phone instead of per-call compensation for subscriber 800 and access code calls from payphones when payphone-specific coding digits are not available from those payphones. On March 9, 1998, the Bureau adopted a Memorandum Opinion and Order clarifying the payphone-specific coding digit requirements set forth in the *Payphone Orders* and granting limited waivers of the requirement that local exchange carriers (''LECs'') provide payphone-specific-coding digits to PSPs, and that PSPs provide coding digits from their payphones to IXCs, before PSPs can receive per-call compensation from IXCs for subscriber 800 and access code calls.[2] The *Order* serves as a companion to the *Bureau Coding Digit Waiver Order,* because in the order the Bureau grants IXCs a waiver of the per-call compensation requirement so they may pay per-phone instead of per-call compensation for the payphones for which the Bureau granted waivers in the *Bureau Waiver Order* [3] and the *Bureau Coding Digit Waiver Order.*[4]

2. Moreover, in the *Order,* the Bureau addresses a letter filed by AT&T Corporation (''AT&T'') requesting that AT&T, and other similarly situated IXCs, receive a waiver to pay per-phone rather than per-call compensation when payphone-specific coding digits are not available for a payphone. The *Order* grants in part AT&T's request that AT&T and other similarly situated IXCs be permitted to compensate PSPs on a per-phone basis, where payphone-specific coding digits are not available. The *Order* concludes that the waiver granted therein, which allows IXCs to pay per-phone compensation when payphone-specific coding digits are not available from a payphone, is necessary to ensure that PSPs receive fair compensation while LECs, PSPs, and IXCs transition to providing and receiving payphone-specific coding digits to identify calls from payphones. In the *Order,* the Bureau also concludes that granting the waiver and allowing IXCs to pay per-phone instead of per-call compensation where payphone-specific coding digits are not available is in the public interest.

3. The *Bureau Coding Digit Waiver Order* required that payments be remitted at least on a quarterly basis. That order required that the payment for the October 1997 through December 31, 1997 period must be paid no later than April 1, 1998. In the *Order,* however, the Bureau notes that the waiver granted therein will require some IXCs to obtain additional information and calculate their per-phone compensation amounts, and that these IXCs may need additional time to make the payments to PSPs for the October 1997 through December 31, 1997 period for payphone compensation. Thus, the Bureau stated that IXCs may make this payment no later than April 30, 1998, but must include additional interest for the period after April 1, 1998, at the rate of 11.25 percent per year, if the payment is not made by April 1, 1998.

4. The waiver granted in the *Order* is effective on April 3, 1998, to ensure that all PSPs continue to receive compensation, as required by the *Payphone Orders* and the *Second Report and Order.* Without this waiver, many

[1] *Implementation of the Pay Telephone Reclassification and Compensation Provisions of the Telecommunications Act of 1996,* CC Docket No. 96–128, Report and Order, 61 FR 52307 (October 7, 1996) (''*Report and Order*''); Order on Reconsideration, 61 FR 65341 (December 12, 1996), (''*Order on Reconsideration*'') (together the ''*Payphone Orders*''). The *Payphone Orders* were affirmed in part and vacated in part. See *Illinois Public Telecomm. Ass'n* v. *FCC,* 117 F.3d 555 (D.C. Cir. 1997) (''*Illinois Public Telecomm.*''). *See also* Second Report and Order, 13 FCC Rcd 1778 (1997) (''*Second Report and Order*''), pets. for recon. pending, review pending, *MCI Telecomm. Corp.* v. *FCC,* D.C. Circuit No. 97–1675 (filed November 7, 1997); *Sprint Corp.* v. *FCC,* D.C. Circuit No. 97–1685 (filed November 13, 1997); *Personal Communications Industry Association* v. *FCC,* D.C. Circuit No. 97–1709 (filed December 1, 1997); *Illinois Public Telecommunications Association* v. *FCC,* D.C. Circuit No. 97–1713 (filed December 3, 1997).

[2] *See Bureau Coding Digit Waiver Order,* Memorandum Opinion and Order, CC Docket No. 96–128, DA 98–481 at paras. 19–20 (rel. March 9, 1998), 63 FR 20534 (April 27, 1998).

[3] *Implementation of the Pay Telephone Reclassification and Compensation Provisions of the Telecommunications Act of 1996,* 62 FR 58659 (October 30, 1997), (*Bureau Waiver Order*).

[4] This waiver order relies on the record established for the *Bureau Coding Digit Waiver Order* 63 FR 20534 (April 27, 1998), and ex partes received subsequent to the release of that order. *Pleading Cycle Established for Petitions to Waive Payphone Coding Digits,* Public Notice, 12 FCC Rcd 17,340 (1997) (*Public Notice*).

PSPs would not be compensated for payphone calls that began October 7, 1997, because the LECs servicing them are not yet able to provide payphone-specific coding digits, and some of the IXCs are unable to identify certain payphone calls. The immediate implementation of the waiver is crucial to the Commission's efforts to ensure fair compensation for all PSPs, encourage the deployment of payphones, and enhance competition among PSPs, as mandated by Section 276.

5. The *Second Report and Order,* established a default compensation rate of $0.284 per call, absent a negotiated agreement, for subscriber 800, access code, inmate, and 0+ calls. In the *Order* the Commission also extended the default per-call compensation period from one to two years, for the first two years of per-call compensation, i.e., from October 7, 1997 until October 6, 1999, to allow participants, including IXCs, LECs, and PSPs, additional time to adjust to market-based per-call payphone compensation for subscriber 800 and access code calls.

6. In the *Payphone Orders,* the Commission imposed a requirement that, by October 7, 1997, LECs transmit payphone-specific coding digits to PSPs, and that PSPs transmit those digits from their payphones to IXCs. The Commission also required IXCs to implement methods to track payphone calls. In the *Order on Reconsideration,* the Commission clarified that the provision of payphone-specific coding digits is a prerequisite to payphone per-call compensation payments by IXCs to PSPs for subscriber 800 and access code calls and that each payphone must transmit coding digits that ''specifically identify it as a payphone, and not merely as a restricted line.'' Finally, that order clarified that LECs must make available to PSPs, on a tariffed basis, such coding digits as part of their ANI for each payphone.

7. On October 7, 1997, the Bureau provided, on its own motion, a limited waiver until March 9, 1998, for those payphones from which the necessary coding digits to identify individual payphone calls were not provided. The limited waiver was to afford LECs, IXCs, and PSPs an extended transition period for the provision of payphone-specific coding digits without further delaying the payment of per-call compensation for each and every call originated from a payphone as required by Section 276 of the Communications Act. This limited waiver applies to the requirement that LECs provide payphone-specific coding digits to PSPs, and that PSPs provide coding digits from their payphones before they can receive per-call compensation from IXCs for subscriber 800 and access code calls. The Bureau stated, however, that LECs and PSPs capable of transmitting coding digits for some or all of their serving area remained obligated to do so.

8. On March 9, 1998, in the *Bureau Coding Digit Waiver Order,* the Bureau clarified the requirements established in the *Payphone Orders* for the provision of payphone-specific coding digits by LECs and PSPs, to IXCs. Specifically, the Bureau clarified that flexible automatic numbering identification (''FLEX ANI'') and automatic number information indicators (''ANI ii'') are the methods to provide payphone-specific coding digits that comply with the requirements of the *Payphone Orders.* The Bureau also clarified the requirement for federal tariffs that LECs must file pursuant to the *Payphone Orders.* The Bureau also granted permissions and waivers under Part 69 of the Commission's rules allowing LECs to establish rate elements to recover the costs of implementing FLEX ANI to provide payphone-specific coding digits for per-call compensation. In addition, the Bureau granted, on its own motion, limited waivers to LECs, PSPs, and IXCs to facilitate the transition to per-call compensation and affirmed its grant, in the *Bureau Waiver Order,* of a limited waiver of five months, until March 9, 1998, to those LECs and PSPs who asserted that they could not provide payphone-specific coding digits as required by the *Payphone Orders.*

9. In the *Bureau Coding Digit Waiver Order,* the Bureau emphasized that the IXC obligation to pay per-call compensation established in the *Payphone Orders* remains in effect. As required in the *Bureau Waiver Order,* payphones appearing on the LEC-provided lists of payphones are eligible for per-call compensation even if they do not transmit payphone-specific coding digits. As required in the *Payphone Orders* and the *Second Report and Order,* absent a negotiated agreement, IXCs must pay per-call compensation of $0.284, for all calls not otherwise compensated that they receive from payphones. LECs that have certified to the IXC that they comply with the requirements of the *Payphone Orders* must receive per-call compensation.

II. Discussion

A. AT&T Request for Per-phone Compensation

10. Beginning October 7, 1997, IXCs were required to pay compensation on a per-call basis. AT&T states, however, that it will be unable to pay per-call compensation because of the waiver granted in the *Bureau Waiver Order,* which provides LECs and PSPs an extended time period within which to provide payphone-specific coding digits.

11. In the *Order,* the Bureau grants, in part, AT&T's request that the Bureau waive the payphone compensation provisions and permit IXCs to pay per-phone—instead of per-call—compensation when payphone-specific coding digits are not provided with a payphone call's ANI. In the *Report and Order,* the Commission concluded that the requisite technology exists for IXCs to track calls from payphones. The Commission recognized, however, that tracking capabilities vary from carrier to carrier, and that it may be appropriate, for an interim period, for some carriers to pay compensation for ''each and every completed intrastate and interstate call'' on a flat-rate basis until per-call tracking capabilities are in place. In the *Bureau Coding Digit Waiver Order,* the Bureau explained that the record indicates that LECs, PSPs, and IXCs are encountering problems with transitioning to per-call compensation. Therefore, the Bureau concluded that AT&T had shown special circumstances for IXCs to pay per-phone instead of per-call compensation when payphone specific coding digits are not available, particularly in light of the waivers granted within the *Bureau Waiver Order* and the *Bureau Coding Digit Waiver Order.*

12. Other IXCs also indicate a problem paying per-call compensation during the waiver period when payphone-specific coding digits are not available and that in certain circumstances, such as payphones served by nonequal access switches, payphone-specific coding digits will not be available until the switches are replaced. Therefore, the Bureau also concludes in the *Order* that it is in the public interest to grant the waiver conditioned upon an IXCs compliance with the methodology set forth herein, which allows IXCs to pay per-phone compensation where payphone-specific coding digits are unavailable from a payphone. The Bureau further stated that it is in the public interest to grant the waiver to require per-phone compensation where payphone-specific coding digits are unavailable from a payphone, so that there is no further delay in the payment of payphone compensation. This waiver is consistent with the Commission's conclusion in the *Payphone Orders* that it is

appropriate for carriers to pay flat-rate or per-phone compensation for an interim period until carriers fully implement tracking capabilities. The waiver granted therein does not apply if either the ''27'' coding digit or FLEX ANI coding digits (''27,'' ''70,'' ''29'') are available from a LEC for that payphone and that payphone is able to provide payphone-specific coding digits; where the payphone-specific coding digit is available, the per-call compensation requirements apply.

B. Per-call and Per-phone Compensation Requirements

1. Compensation Requirements

13. In the *Bureau Waiver Order* and the *Bureau Coding Digit Waiver Order,* the Bureau required IXCs to pay per-call compensation. Pursuant to the waiver granted in the *Order,* beginning October 7, 1997, IXCs must either pay per-call, or per-phone compensation as described in the Order, for payphones that do not provide payphone-specific coding digits. IXCs must pay per-call compensation for all payphones capable of providing a ''27'' ANI ii coding digit or FLEX ANI coding digits (''27,'' ''70,'' ''29'') for compensable calls. IXCs must compensate payphones that do not provide payphone-specific coding digits (''27,'' ''70,'' ''29'') either on a per-call basis or the per-phone method described in the *Order* and set forth in the brief below. Therefore, according to the *Order,* IXCs who choose to pay per-phone compensation pursuant to the waiver granted therein, must use payphone call volume information that is available to them already to determine the call volumes for which a payphone should be compensated when payphone-specific coding digits are not available for a specific payphone. An IXC may chose to compensate those payphones that are not capable of providing payphone-specific coding digits on a per-call basis where the IXC maintains a per-call tracking mechanism, such as tracking payphone calls from payphones that transmit an ''07'' digit and then comparing those calls to ANI lists. The *Order* specifies, however, that an IXC may not compensate some payphones that do not provide payphone-specific coding digits (but do provide an ''07'' ANI ii coding digit) on a per-call basis and other payphones that do not provide payphone-specific coding digits (but do provide an ''07'' ANI ii coding digit) on a per-phone basis, except for those payphones that are in the process of changing from per-phone to per-call compensation. The Bureau notes that the default rate established in the *Second Report and Order,* $0.284, which terminates at the conclusion of per-call compensation—October 7, 1999—will continue to remain in effect as a default compensation rate, absent a negotiated agreement, for calls originated from those payphones that are not able to provide payphone-specific coding digits.

14. LECs must provide ANI lists and lists of end offices that are not providing payphone-specific coding digits that specifically identify smart and dumb payphones to IXCs. In accordance with the compensation mechanism described in the *Order,* IXCs must pay per-call compensation, not per-phone compensation, once FLEX ANI is available in an end office. If payphone-specific-coding digits are available for a payphone in an end office, the fact that an IXC may decide not to take FLEX ANI from the LEC for that end office does not relieve the IXC of paying per-call compensation for that payphone once payphone-specific coding digits are available. The waiver to pay per-phone compensation does not apply in this case.

15. In the *Order,* the Bureau also clarifies the requirements set forth in the *Bureau Coding Digit Waiver Order,* that LECs provide IXCs and PSPs with certain information on request. Because IXCs choosing to pay per-call compensation for smart payphones even when payphone-specific coding digits are not available will have to compare calls with an ''07'' ANI ii digit with a LEC ANI list, the *Order* requires that the LEC ANI lists provided to the IXCs as required in the *Bureau Coding Digit Waiver Order* also indicate whether the smart payphones are transmitting the ''07'' digit. LECs also must provide FLEX ANI and ANI ii payphone-specific coding digits as soon as they are available on a switch to each IXC once the IXC requests the service for payphone compensation.

2. Compensation Methodology

16. IXCs must pay per-call compensation for a payphone if ANI ii payphone-specific coding digits (''27'') or FLEX ANI payphone-specific coding digits (''27,'' ''70,'' ''29'') are available to the IXC. In the *Order,* the Bureau grants a waiver to IXCs and allows them to compensate PSPs on a per-phone basis for those payphones that are not able to provide payphone-specific coding digits conditioned upon the IXCs compliance with the methodology set forth in the *Order.* IXCs electing to pay per-phone compensation in accordance with the waiver granted in the *Order,* must calculate the average number of subscriber 800 and access code calls based on information obtained from BOC dumb payphones transmitting the ''27'' coding digit. The *Order* divides payphones into five categories for determining the methodology used to calculate per-phone compensation: (1) Payphones able to provide payphone-specific coding digits; (2) LEC payphones that are not able to provide payphone-specific coding digits served by equal access switches (except those payphones subject to category (5)); (3) independent PSP payphones that are not able to provide payphone-specific coding digits served by equal access switches (except those payphones subject to category (5)); (4) payphones served by non-equal access switches; and (5) payphones on equal access switches owned by small and midsized LECs granted a waiver from the implementation of FLEX ANI because they are unable to recover the cost of FLEX ANI implementation over a reasonable period (''small and midsized LEC waiver'') pursuant to paragraph 76 of the *Bureau Coding Digit Waiver Order.*

17. Although the *Order* describes the compensation method for these categories individually, with the exception of compensation for those payphones that are able to provide payphone-specific coding digits, IXCs must use call volume information obtained from October 1997 through March 31, 1998 (the ''sample period''), to establish average subscriber 800 and access code call volumes per-phone to compensate PSPs for calls originated from their payphones during the fourth quarter of 1997 and the first quarter of 1998 (from October 7, 1997 through March 31, 1998). Thereafter, IXCs paying per-phone compensation will base compensation owed to PSPs for payphones that are not able to provide payphone-specific coding digits on call volumes obtained from BOC dumb payphones that are able to provide payphone-specific coding digits representative of the quarter for which compensation is owed.[5] Regardless of whether a payor pays per-call or per-phone compensation, each payor must compensate PSPs $0.284 per call, adjusted for interest where appropriate. In addition, although the compensation mechanism calculates compensation on a monthly basis, compensation must be remitted at least on a quarterly basis absent alternative arrangements between the PSP and the IXC. Payphones can

[5] For example, if compensation is due to PSPs for the second quarter of 1998, IXCs will pay PSPs based on call volumes collected from BOC dumb payphones during April–June 1998.

receive compensation only for those months that they were in service.

18. IXCs must maintain the information they use to develop the per-call and per-phone compensation payments to PSPs. In the *Report and Order,* the Commission required that IXCs initiate an annual verification of their per-call tracking functions to be made available for FCC inspection upon request, for the 1998 calendar year to ensure that IXCs are tracking all of the calls for which they are obligated to pay compensation. Nothing in the *Order* relieves IXCs of the responsibility of maintaining this information. When paying per-phone compensation as described therein, payphone compensation payors should note that payments by each payor for each payphone being compensated by that payor on a per-phone basis will be the same, although different payors will vary in the number of calls for which they must compensate payphones receiving per-phone compensation. Payors must be prepared to submit their compensation calculations and payment records if requested by the Bureau.

a. *Payphones capable of providing payphone-specific coding digits.*

19. The first category, payphones capable of providing payphone-specific coding digits, must be compensated on a per-call basis. Compensation must be remitted at least on a quarterly basis absent alternative arrangements between the PSP and the IXC. If a payphone that is not able to provide payphone-specific coding digits becomes capable of providing payphone-specific coding digits in the first 60 days of a quarter, then the IXC will be responsible for compensating that particular PSP on a per-call—instead of per-phone—basis beginning the next quarter. The payor will multiply the number of calls received from each PSP's payphone capable of providing payphone-specific coding digits by $0.284 to compute compensation owed to that PSP.

b. *LEC payphones that are not capable of providing payphone-specific coding digits.* 20. The second category, LEC payphones that are not able to provide payphone-specific coding digits, will be compensated on a per-phone basis. In the *Order,* the Bureau bases compensation for LEC payphones that are not capable of providing payphone-specific coding digits on the average number of subscriber 800 and access code calls realized from BOC dumb payphones that are able to provide payphone-specific coding digits. There is insufficient information on the record to suggest that LEC payphones that are not able to provide payphone-specific coding digits realize different call volumes than BOC payphones that are able to provide payphone-specific coding digits. Therefore, in the *Order,* the Bureau found that it is appropriate to base compensation for LEC payphones that are not able to provide payphone-specific coding digits on call volumes realized by BOC payphones that are able to provide payphone-specific coding digits.

21. To determine the amount of compensation due to LEC payphones that are not able to provide payphone-specific coding digits,[6] the payor will calculate the average number of subscriber 800 and access code calls it received from BOC dumb payphones that are able to provide payphone-specific coding digits (the ''27'' coding digit) from October 1, 1997 through March 31, 1998 (the sample period). First, the IXC will sum the number of completed subscriber 800 and access code calls it received from all BOC dumb payphones that were capable of providing payphone-specific coding digits during this period and divide by six. This results in the average number of subscriber 800 and access code calls received from all BOC dumb payphones per month. Second, the payor will obtain from the BOCs the number of BOC dumb payphones that were capable of providing payphone-specific coding digits as of the first of each month for the sample period. The payor will sum the figures and divide by six. This is the average number of BOC dumb payphones able to provide payphone-specific coding digits during the sample period. Third, the payor will divide the average number of calls calculated above in step one (1) by the average number of payphones calculated in step two (2). This division results in the average call volume per month for BOC dumb payphones that are providing the ''27'' coding digit (either through ANI ii, or FLEX ANI). This average number will be the number of calls for which compensation is due per month to each LEC payphone that is not capable of providing payphone-specific coding digits.[7] Lastly, the payor will multiply the average monthly call volume by $0.284 to compute compensation owed per-phone per month. As discussed above, this data will be used to compensate payphones for the last quarter of 1997 and the first quarter of 1998. Thereafter, LEC dumb payphones will be compensated using this same methodology based on call volume information obtained from BOC dumb payphones during the applicable quarter using three months of data rather than six months of data. In the *Order,* the Bureau declines to adjust call volume calculations to account for the possibility that BellSouth may place dumb payphones only in the lowest call volume locations. Due to the different placement strategies and the variance among payphone types, call volumes will vary among BOCs. Therefore, omitting what might be the lowest call volume data from the sample would not lead to an unbiased estimate of BOC payphone call volumes, because it would artificially leave in the highest remaining data.

c. *Independent PSP payphones that are not capable of providing payphone-specific coding digits.* 22. The third category, independent PSP payphones that are not capable of providing payphone-specific coding digits,[8] also will be compensated on a per-phone basis as calculated above for LEC payphones that are not capable of providing payphone-specific coding digits. In the *Order,* the Bureau declines to increase the average call volumes calculated above from BOC payphone call volumes for independent PSPs payphones, because data on the record indicates that the call volumes may be similar, and further, in the *Report and Order,* despite limited (if any) call volumes between BOCs and independent payphones, the Commission established one call volume for independent and LEC PSPs. In adopting a uniform rate, the Commission noted that some differences may exist among various PSPs, but found that each PSP should receive the same compensation amount for subscriber 800 and access code calls. The Commission also sought to allow all competitors equal opportunity to compete for essential aspects of the payphone business. In the *Order,* the Bureau also declined to establish separate call volume amounts for the purpose of this limited waiver, and concludes instead that call volumes should not be treated differently based on ownership characteristics.

d. *Payphone on non-equal access switches.* 23. The fourth category involves payphones on non-equal access switches. Non-equal access switches do not provide payphone-specific coding digits; therefore, theses payphones must

[6] The Bureau notes that this compensation method is for those payphones that are located on equal access switches.

[7] In calculating the amount owed to PSPs per-phone for the month of October, the payor may divide the monthly average per-phone rate for the month by 31 days and subtract for six days to begin per-phone compensation on October 7, 1998.

[8] To clarify, payphones that will receive compensation under the mechanism described in this section are independent payphones that are not capable of providing payphone-specific coding digits and are served by equal access switches.

be compensated on a per-phone basis until they are able to provide payphone-specific coding digits. Both IXCs and LECs have indicated that payphones served by nonequal access switches receive lower call volumes than other payphones. Parties have provided limited information to establish a call volume for these payphones. GTE indicates that it has a total of 289 payphones on non-equal access switches, which receive an average of 14.35 calls per payphone per month, and a small company in Iowa, Heart of Iowa Telecommunications Cooperative, which maintains 11 payphones, receives an average of 65 calls per payphone per month. Based on this limited data submitted on the record illustrating that call volumes for payphones on non-equal access switches and switches in rural areas receive substantially less calls than BOC dumb payphones, in the *Order,* the Bureau concluded that payphones on non-equal access switches cannot be compensated based on the average call volumes for BOC dumb payphones. Accordingly, payors must compensate payphones served by non-equal access switches based on the weighted average of call volumes submitted in this record for payphones served by non-equal access switches and payphones served by rural switches, 16 calls per-phone per month.[9]

24. In the *Order,* the Bureau stated that it expected parties to submit additional information on the record regarding call volumes for non-equal access areas. The Bureau stated that it would consider revisions to the compensation methodology for payphones served by non-equal access switches if it received additional record information on call volumes for non-equal access payphones that suggests that call volumes are different than the data upon which we rely herein.

e. *Payphones served by LECs granted small and midsize LEC waiver.* 25. In the *Bureau Coding Digit Waiver Order,* the Bureau granted a limited waiver to midsize and small LECs for equal access switches where a LEC is unable to recover its costs of implementing FLEX ANI, through a monthly charge for no longer than a 10 year period, from all payphones in its serving area.[10] This waiver is specifically granted for small and midsize LECs for which the cost of implementing FLEX ANI would be unreasonably burdensome, despite provisions in the *Bureau Coding Digit Waiver Order* for cost recovery. This waiver was provided for small and midsize LECs with a small number of payphones per switch. Payphones served by LECs that would qualify for this waiver, would be located in more rural areas than other payphones and thus would have lower call volumes. Therefore, in the *Order,* the Bureau concludes that these payphones should receive per-phone compensation as described above for payphones served by nonequal access switches until payphone-specific coding digits are available for these payphones. The Bureau stated, however, that if it received additional information on the record indicating that call volumes are different for small and midsized LECs that have deferred FLEX ANI implementation pursuant to the small and midsized LEC waiver it may subsequently require different call volumes for these two catagories.

3. Alternative Per-Call Compensation Methodologies

26. In the *Order,* the Bureau declined to adopt the flat-rate interim compensation approach set forth in the *Payphone Orders,* which required IXCs with annual toll revenues in excess of $100 million to pay, collectively, a flat-rate interim compensation amount of $45.85 per payphone per month, in shares proportionate to their share of total market long distance revenues. In the *Order,* the Bureau noted that the court in *Illinois Public Telecomm.* vacated the Commission's flat-rate interim compensation plan stating that the Commission did not justify basing flat-rate compensation on total toll revenues, and therefore, acted arbitrarily and capriciously by only requiring payments from the largest IXCs. The court further stated that the Commission had not shown a nexus between toll revenues and the number of access code and subscriber 800 calls a particular carrier carries.

27. The *Order* also rejects basing per-phone compensation aggregated call volume data supplied by the Coalition because the data is limited in nature, accounting for only 20 percent of the payphones, may neglect regional variations, may not be representative of all BOCs, and provides insufficient information to establish per-phone call volumes for small carriers, a problem faced in the allocation method used in the *Report and Order* that was vacated by the court.

28. In the *Order,* the Bureau also concludes that a retroactive adjustment of payphone compensation for the period covered by the *Bureau Waiver Order* and the *Bureau Coding Digit Waiver Order* is not necessary, because the methodology adopted therein to provide fair compensation through a per-phone mechanism that reasonably approximates call volumes for PSP payphones.

4. Miscellaneous

29. The *Order* also declines to require, as USTA requests, that LECs be compensated for all blocked calls, because, USTA argues, blocked calls are the result of IXCs using FLEX ANI or LIDB for fraud detection, pursuant to CC Docket No. 91–35. The Commission defined a completed call as a call answered by the called party. Because a blocked call is by definition not a completed call, the *Payphone Orders* do not require such compensation. The *Order* also declines to require that any waiver granted in response to AT&T's request be granted only after IXCs have paid interim compensation and only to IXCs that demonstrate that they cannot track compensable calls using LEC ANI lists.

30. APCC requests that the Bureau clarify the obligations of facilities-based IXCs who provide 800 service to disclose information about switch-based resellers who provide 800 number service resold from the facilities based carriers so that PSPs can identify who they should bill for payphone compensation. APCC indicates that its members are unable to identify the switch-based reseller to bill for payphone compensation. In the *Report and Order* the Commission acknowledged that telecommunications services are sold in advance, particularly in the debit card context, and resold to other carriers, thus making it difficult in those situations to identify the carrier liable for per-call compensation. The Commission also stated that facilities-based carriers may recover the expense of payphone per-call compensation from their reseller customers. As clarified in the *Order on Reconsideration,* switched-based resellers are responsible for paying per-call compensation. When facilities-based IXCs providing 800 service have determined that they are not required to pay compensation on particular 800

[9] The weighted average is derived as follows: 289 GTE payphones x 14.35 calls per payphone per month = 4147.15 total calls. We then determined the total number of calls for the small payphone company in Iowa: 11 x 65 = 715 calls. Finally, we found the total number of calls to be 4862.15 (4147.15 + 715) and divided that by the total number of payphones (300), which results in an average call volume of 16 calls per-phone per month.

[10] This limited waiver for small and midsize LECs that are not able to recover their costs of implementing FLEX ANI over up to a 10 year period is not available to price cap, CLASS A, and Tier 1 LECs. In 1996, the Class A LECs included all price cap LECs.

number calls because their switch-based reseller customers have identified themselves as responsible for paying the compensation, those facilities-based carriers must cooperate with PSPs seeking to bill for resold services. Thus, a facilities-based carrier must indicate, on request by the billing PSP, whether it is paying per-call compensation for a particular number. If it is not, then it must identify the switch based reseller responsible for paying payphone compensation for that particular 800 number. Facilities-based IXCs and switched-based resellers may not avoid compensating PSPs by withholding the name of the carrier responsible for paying per-call compensation, thereby avoiding the requirements of the *Payphone Orders* and Section 276.

IV. Conclusion and Ordering Clauses

31. For the foregoing reasons, we grant in part AT&T's letter request to pay per-phone compensation to PSPs where payphone-specific coding digits are not available. We find that allowing AT&T and other similarly situated IXCs to pay per-phone instead of per-call compensation based on the methodology set forth above, is in the public interest, because it will further the goals of Section 276 of the Act, that PSPs be compensated for each and every completed call and will ease the transition to per-call compensation.

32. Accordingly, pursuant to authority contained in Sections 1, 4, 201–205, 218, 226, and 276 of the Communications Act of 1934, as amended, 47 U.S.C. 151, 154, 201–205, 218, 226, and 276, that the policies and requirements set forth herein are adopted.

33. It is further ordered that this order is effective immediately upon release thereof.

34. It is further ordered that AT&T's letter request to pay on a per-phone instead of a per-call basis is granted to the extent described herein and is otherwise denied.

Federal Communication Commission.

A. Richard Metzger, Jr.,

Chief, Common Carrier Bureau.

[FR Doc. 98–12347 Filed 5–12–98; 8:45 am]

BILLING CODE 6712–01–U

FEDERAL COMMUNICATIONS COMMISSION

47 CFR Part 101

[CC Docket No. 92–297; FCC 98–77]

Rules and Policies for Local Multipoint Distribution Service and for Fixed Satellite Services

AGENCY: Federal Communications Commission.

ACTION: Final rule.

SUMMARY: This action amends the rules to adopt partitioning and disaggregation rules for the Local Multipoint Distribution Service (LMDS). This action will encourage spectrum efficiency and the more rapid deployment of service to the public. The effect of these rules is to provide LMDS licensees greater flexibility to respond to marketplace demands.

EFFECTIVE DATE: May 28, 1998.

FOR FURTHER INFORMATION CONTACT: Susan Magnotti of the Public Safety and Private Wireless Division, Wireless Telecommunications Bureau at 202–418–0680 or via email at smagnott@fcc.gov.

SUPPLEMENTARY INFORMATION:

1. This is a summary of the Commission's *Fourth Report and Order* to allow partitioning and disaggregation for LMDS spectrum.

2. On March 11, 1997, the Commission adopted the *Second Report and Order* (*Second Report and Order*), 62 FR 23148; April 29, 1997, *Order on Reconsideration, and Fifth Notice of Proposed Rule Making (Fifth NPRM),* 62 FR 16514; April 7, 1997, wherein it established service rules to govern licensing of LMDS and competitive bidding rules to select among mutually exclusive LMDS applications. The Commission concluded that its actions would open the door for new broadband wireless services and that LMDS spectrum could be used to provide competition to both local exchange carriers (LECs) and cable television systems. It envisioned that our LMDS service and licensing rules would foster the future growth of this new service and permit LMDS licensees to satisfy a broad array of their customer's communications needs. In addition, the Commission permitted partitioning and disaggregation by LMDS licensees to encourage spectrum efficiency and the more rapid deployment of service, and to leave the decision of determining the correct size of licenses to the licensees and the marketplace. It concluded that allowing partitioning and disaggregation for LMDS spectrum would create powerful tools for licensees to concentrate on core areas or to deliver services outside of the major market areas. The Commission further found that LMDS partitioning and disaggregation would provide opportunities for small businesses seeking to enter the multipoint video distribution and local telephony marketplaces.

3. In the *Fifth NPRM*, the Commission sought comment on specific procedural, administrative and operational rules to govern LMDS partitioning and disaggregation. It sought comment on how rights and obligations of LMDS licensees would be affected if such licensees were permitted to avail themselves of the partitioning and disaggregation options. It also sought comment on whether there are any technical or regulatory constraints unique to the LMDS service that would render any aspects of partitioning and disaggregation impractical or administratively burdensome. In this connection, the Commission noted that it had recently adopted specific procedures for partitioning and disaggregation in the broadband Personal Communications Services (PCS) and sought comment on whether such procedures would be appropriate for LMDS. A total of five comments and five reply comments were received in response to the *Fifth NPRM.*

A. Available License Area

4. *Background*. In the *Fifth NPRM*, the Commission tentatively concluded that parties to a LMDS partitioning agreement should be afforded flexibility in defining partitioned license areas. It sought comment on this tentative conclusion and, in particular, asked whether there are any technical or other issues unique to LMDS that would dictate a different approach.

5. *Discussion*. We conclude that LMDS licensees should have broad flexibility in defining partitioned license areas. As we noted in the *Fifth NPRM*, such an approach is consistent with our treatment of partitioning in other services, particularly broadband PCS. In addition, we believe that allowing LMDS licensees to partition their service areas along any boundaries they wish will enhance their ability to respond quickly to consumer demands. In this connection, we agree with CellularVision USA, Inc. (CellularVision) that such an approach will allow LMDS licensees to consider unique geographical or market characteristics when designing their business plans. We also are concerned that requiring LMDS partitioned areas to be based upon a uniform standard, such

as geopolitical boundaries or county lines, might unnecessarily restrict LMDS partitioning opportunities. For example, Hardin predicts that LMDS operations will most likely consist of cell sites with a small range. In this context, Hardin contends that partitioning based upon a minimum standard, such as geopolitical boundaries or county lines, would not accommodate small-scale partitioning options which may be desirable for LMDS spectrum. We also previously concluded that LMDS has the capacity to meet the more circumscribed needs of smaller operators and niche markets. We find that permitting partitioning into smaller units will further assist small operators to meet their business goals and will encourage the development of niche markets and innovative service offerings. Thus, we believe that more flexible partitioning will better serve the interests of LMDS licensees and the public.

6. As we have in all other contexts in which we have permitted partitioning, we will require that parties seeking approval to partition an LMDS license submit a description of the partitioned service area. The partitioned service area must be defined by coordinate points at every 3 degrees along the partitioned service area agreed to by both parties, unless either (1) an FCC-recognized service area is utilized (i.e., Metropolitan Statistical Area, Rural Service Area or Economic Area) or (2) county lines are followed. If the partitioned service area includes an FCC-recognized service area or county and additional areas, applicants are required to identify the FCC-recognized service areas or county and give the aforementioned coordinate data for the additional areas. These geographical coordinates must be specified in degrees, minutes and seconds to the nearest second of latitude and longitude. For areas located in the coterminous United States and Alaska the geographical coordinates must be based upon the 1983 North American Datum (NAD83). For locations in areas such as Hawaii, Puerto Rico, the South Pacific Islands, etc. the geographical coordinates must be based upon the World Geodetic System of 1984 (WGS84). This coordinate data should be supplied as an attachment to the assignment application, but maps need not be supplied. In cases where an FCC recognized service area or county lines are being utilized, applicants must list the specific area(s) (through use of FCC designations) or counties that comprise the partitioned area.

B. Disaggregation Standards

7. *Background*. In conjunction with the general rule permitting disaggregation of LMDS spectrum in the *Second R&O*, the Commission did not propose any restrictions on the amount of spectrum that licensees could disaggregate. In the Fifth NPRM, it nonetheless requested comment as to whether there should be spectrum limits on disaggregation. The Commission asked commenters to indicate any unique characteristics of LMDS which would warrant such limitations.

8. *Discussion*. We conclude that no minimum or maximum limits should be imposed on disaggregation of LMDS spectrum. We agree with commenters' arguments that we should establish similar rules in LMDS for disaggregation as we established for other wireless services such as broadband PCS. We also agree with WebCel that regulatory parity will be achieved by adopting a similar disaggregation rule for all wireless services. As with partitioning, we believe that permitting market forces to determine whether and how much spectrum is disaggregated will ensure that LMDS licensees are able to use their spectrum more efficiently and to respond quickly to customer demand. In addition, we believe that affording LMDS licensees this flexibility will facilitate participation by small businesses in the provision of LMDS.

9. Based on our review of the record, we are not persuaded that there should be any restrictions on the amount of spectrum that LMDS licensees can disaggregate. We disagree with Texas Instruments' argument that LMDS licensees cannot provide competition to LECs and cable television operators unless they are required to retain a substantial portion of their spectrum. To the contrary, we find that requiring LMDS licensees to retain a substantial portion of their spectrum could potentially exclude small businesses from entering the LMDS marketplace. We believe that such a result would ultimately limit, rather than encourage, competition. We also disagree with Texas Instruments' contention that LMDS has unique characteristics warranting a requirement that a licensee retain a predominant share of its LMDS spectrum. Texas Instruments argues that we should follow the example of our decision in the direct broadcast satellite (DBS) proceeding. In the *DBS R&O*, 60 FR 65587; December 20, 1995, we required that DBS licensees, after 5 years from date of license grant, use a predominant share of their authorized spectrum for DBS service. Texas Instruments argues that we should adopt a similar requirement for LMDS licensees with the majority of LMDS spectrum remaining with the original licensee and being used to provide LMDS. We disagree that LMDS licensees should be required to retain a certain amount of their spectrum. In the *DBS R&O*, we required licensees to use a portion of their spectrum to provide DBS service to ensure that this spectrum is used principally for DBS service. We enacted this restriction to ensure the viability of the DBS service and to carry out the international allocation of this spectrum for DBS use. By contrast, there are no similar unique characteristics of LMDS, particularly in light of the fact that LMDS licensees can provide a wide array of terrestrial services. The fact that licensees have the freedom under our rules to use their spectrum for different applications makes it potentially constraining to adopt a minimum disaggregation standard. Therefore, we find there is no public interest reason to restrict the amount of LMDS spectrum that can be disaggregated.

C. Combined Partitioning and Disaggregation

10. *Background*. In the *Fifth NPRM*, the Commission tentatively concluded that combined partitioning and disaggregation should be permitted to provide LMDS licensees with the additional flexibility they need to respond to market forces and service demands. With combined partitioning and disaggregation, it contemplated that an entity would have the flexibility to obtain a portion of Block A or Block B spectrum in only a portion of the original licensee's BTA.

11. *Discussion*. We conclude that permitting combined partitioning and disaggregation will afford interested parties flexibility to provide a variety of service offerings, including those of particular interest to niche markets. We believe that this approach will further our regulatory goals of facilitating the provision of competitive service offerings, encouraging new market entrants, and promoting quality service to the public.

12. While several parties agree that combined partitioning and disaggregation should be permitted, WebCel and Alcatel contend that such an approach could be problematic. WebCel expresses concern regarding the potential administrative burdens associated with processing numerous partitioning and disaggregation requests. WebCel argues that such an approach would create the potential for a large number of applications overwhelming the Commission's processing resources and delaying delivery of LMDS service

to the public. We are unpersuaded by WebCel's speculative concern. We note that while this potential also theoretically exists in the other wireless services for which we have adopted partitioning and disaggregation rules, our experience has shown that we have been able to handle the partitioning and disaggregation applications without any resulting undue delay in the delivery of new services. In addition, we believe that any administrative burden of processing partitioning and disaggregation applications will be lessened by implementation of the Universal Licensing System (ULS) for wireless services, including LMDS, which is already partially on-line accepting electronically-filed applications. We expect that the electronic filing and mapping capabilities of the ULS will ultimately allow for the expeditious processing of LMDS partitioning and disaggregation applications.

13. Alcatel argues that it is unclear how LMDS licensees are to conduct frequency coordination for partitioned and disaggregated licenses. Accordingly, Alcatel seeks clarification as to the frequency coordination obligations of LMDS partitionees and disaggregatees. We clarify that all LMDS licensees, including partitionees and disaggregatees, are required to comply with the frequency coordination provisions set forth in § 101.103 of the Commission's Rules. We adopted this approach in the *Second R&O* and herin we do not provide an exception for partitioning and disaggregation. We further note that the identity of neighboring LMDS licensees should be readily available in the Commission's database, particularly with the implementation of ULS. Thus, we conclude that the concerns expressed by WebCel and Alcatel do not present sufficient reasons for not permitting combined partitioning and disaggregation.

D. Construction Requirements

14. *Background.* LMDS licensees must provide ''substantial service'' to their service area within ten years. In the *Fifth NPRM,* the Commission proposed that, for partitioned LMDS licenses, the partitionee must certify that it will satisfy the same construction requirements as the original licensee. The partitionor and partitionee would therefore be required to meet separate substantial service requirements for their respective portions of the partitioned service area. For disaggregation, the Commission proposed that the parties would be required to submit a certification, signed by both the disaggregator and disaggregatee, stating whether one or both of the parties will retain responsibility for meeting the substantial service requirement for the service area. It proposed that, if one party takes responsibility for meeting the performance requirement, then actual performance by that party would be taken into account in a renewal proceeding at the end of the license term, but such performance would not affect the status of the other party's license. If the parties agreed to share the responsibility for meeting the performance requirement, then the performance of each of the parties would be taken into account in their respective renewal proceedings.

15. *Discussion Partitioned Licenses.* We conclude that the public interest would be furthered by adopting an approach analogous to that used in other contexts, particularly broadband PCS, rather than adopting our proposal for partitioning. In other wireless services, we have allowed licensees the flexibility to negotiate which party will be responsible for meeting the applicable construction requirements. In each of those cases, our goal has been to ensure that licensees had the flexibility to structure their business plans while ensuring that partitioning not be used as a vehicle to circumvent the applicable construction requirements. We have allowed parties to partitioning agreements in other wireless services the flexibility to choose between two options for satisfying the construction requirements. For example, we allow broadband PCS licensees the option of either agreeing to meet the construction requirements for their respective portions of the partitioned market or for the original licensee to certify that it had or would meet the five- and ten-year construction requirements for the entire market. We adopted this second option to allow parties the flexibility to agree that one party would take responsibility for meeting the construction requirement for the entire licensed area. Similarly, we believe that parties interested in entering into LMDS partitioning arrangements should be afforded the same flexibility. Under the first option, the partitionor and partitionee would each certify that it will independently satisfy the substantial service requirement for its respective partitioned area. If a licensee fails to meet its substantial service requirement during the relevant license term, the non-performing licensee's authorization would be subject to cancellation at the end of the license term. Under the second option, the partitionor certifies that it has met or will meet the substantial service requirement for the entire market. If the partitionor fails to meet the substantial service standard during the relevant license term, however, only its license would be subject to cancellation at the end of the license term. The partitionee's license would not be affected by that failure.

16. As indicated in the *Second R&O,* the availability of partitioning will promote and facilitate smaller-scale service offerings and market niches to develop which would be appropriate for smaller operators who could not manage an entire BTA. Our decision to offer two options is based on our belief that LMDS licensees may be motivated to enter into partitioning arrangements for different reasons and under various circumstances. For example, as discussed by DBC, a LMDS licensee might be motivated to partition its license in order to reduce its construction costs. In that case, the original licensee would have less population to cover in order to meet its substantial service requirement. Thus, it may find the first option most attractive for its purposes. Under another scenario, a LMDS licensee that has met or is close to meeting its substantial service requirement may be approached by another entity interested in serving a niche market in a portion of the service area. Under these circumstances, the second option may seem most attractive to the parties. We believe that the partitioning rules for LMDS should address both of these scenarios. We further believe that in both contexts partitioning cannot be used to circumvent the LMDS construction requirements. In any event, we note that we will examine each situation on a case-by-case basis when the licensees file their renewal applications and will be able to address any abuses of the partitioning options in that context.

17. In addition, pursuant to CellularVision's request, we clarify if a partitionor and partitionee elect to meet the substantial service for their respective partitioned areas, then we would make an independent assessment of the construction efforts of the partitionor and partitionee based on the partitioned area, population served, and actual service provided. We acknowledge CellularVision's observation that the service offering provided by a partitionee might be quite different than that provided by the original licensee.

18. *Disaggregated Licenses.* As we proposed in the *Fourth NPRM,* 61 FR 44177; August 28, 1996, we establish

two options for disaggregating licensees. This approach is consistent with what we have done in other wireless contexts. We believe that it would be appropriate for either the disaggregator or the disaggregatee to assume full responsibility for construction within the shared service area, because service would be offered over the relevant population, even if not on the entire spectrum. As DBC points out in its comments, *supra,* we agree that this option could encourage a LMDS licensee to make some of its spectrum available to others. Accordingly, we will permit two options for meeting the construction requirements by disaggregators and disaggregatees. Under the first option, the disaggregator and disaggregatee would certify that they each will share responsibility for meeting the substantial service requirement for the geographic service area. If parties choose this option, both parties' performance will be evaluated at the end of the relevant license term and both licenses could be subject to cancellation. The second option would allow the parties to agree that either the disaggregator or the disaggregatee would be responsible for meeting the substantial service requirement for the geographic service area. If parties choose this option, and the party responsible for meeting the construction requirement fails to do so, only the license of the nonperforming party would be subject to cancellation.

19. We continue to believe that these build-out provisions fulfill our obligations under Section 309(j)(4)(B). We also believe that the auction and service rules which we are adopting for LMDS, together with our overall competition and universal service policies, constitute effective safeguards and performance requirements for LMDS licensing. We believe that service to rural areas will be promoted by our proposal to allow partitioning and disaggregation of LMDS spectrum. The options established herein are intended to provide the greatest possible flexibility to licensees and partitionees while ensuring that rural and niche market areas receive LMDS services. Accordingly, we continue to reserve the right to impose additional, more stringent construction requirements on LMDS licensees in the future in the event of actual anticompetitive or rural service problems and if more stringent construction requirements can effectively ameliorate those problems.

E. License Term and Renewal Expectancy

20. *Background.* LMDS licenses are granted for ten-year terms. In addition, an LMDS licensee involved in a comparative renewal proceeding may qualify for a renewal expectancy if the licensee demonstrates that it has provided substantial service during its license term, and that it has substantially complied with the Communications Act and applicable Commission rules and policies. In the *Fifth NPRM,* the Commission sought comment on whether our LMDS rules should provide that parties obtaining LMDS licenses for partitioned areas or disaggregated spectrum hold their license for the remainder of the original licensee's ten-year term. It noted that, in the *Broadband PCS R&O,* 62 FR 696, January 6, 1997, the Commission found that allowing parties acquiring licenses through partitioning and disaggregation to ''re-start'' the license term from the date of the grant of the assignment application could allow parties to circumvent our rules regarding license terms and unnecessarily delay service to the public. It also sought comment on whether LMDS partitionees and disaggregatees should be afforded the same renewal expectancy as other LMDS licensees.

21. *Discussion.* We find that LMDS partitionees and disaggregatees should hold their licenses for the remainder of the original licensee's ten-year term. This approach is supported by the commenters and is consistent with our action in other wireless services. We see no reason to adopt a different approach for LMDS. As we did with licensees in other wireless services, we believe that LMDS licensees would have less of an incentive to fully utilize their available spectrum if they were permitted to wait until the end of their license term to partition a portion of their market or disaggregate a portion of their spectrum to another entity that would receive a full ten year license term. By limiting the license term for LMDS partitionees and disaggregatees, we believe that there will be maximum incentive for parties to quickly utilize their spectrum and expedite the delivery of LMDS services to the public.

22. In addition, we will permit partitionees and disaggregatees to obtain a renewal expectancy on the same basis as other licensees. All licensees meeting the substantial service requirement will be deemed to have met this facet of the renewal expectancy requirement regardless of which of the construction options the licensees chose. CellularVision asks that we clarify whether LMDS partitionees and disaggregatees may seek a renewal expectancy that is based upon their reduced license period. CellularVision maintains that it would be inequitable, for example, to require a LMDS partitionee with a three-year initial license term to meet the same level of substantial service to obtain a renewal expectancy as the original licensee. We decline to recognize a ''scaled-down'' substantial service construction requirement for partitionees and disaggregatees. Rather, we believe that parties interested in availing themselves of the partitioning and/or disaggregation opportunities should factor in their ability to meet the substantial service requirement when determining the timing of such transactions. We believe that the provisions we have made for construction options for partitioned and disaggregated licenses provide appropriate flexibility, while ensuring that a reasonable standard of service will be provided to the public and that licensees will not be able to bypass our construction requirements. Moreover, we will address each situation on a case-by-case basis taking into account the amount of time the licensee has had to employ its service along with other factors.

F. Competitive Bidding Issues

23. *Background.* When the Commission adopted the *Fifth NPRM,* the competitive bidding rules for LMDS included installment payments and bidding credits for qualified entities. It also adopted rules to prevent unjust enrichment by such entities that seek to transfer licenses obtained through use of these special provisions to an entity that would not have qualified for them. Subsequent to our adoption of the *Fifth NPRM,* the Commission eliminated installment payments for LMDS. Therefore, the proposals in the *Fifth NPRM* concerning whether partitionees and disaggregatees should be able to qualify for installment payments and how to apportion the remaining government obligation between the parties are now moot.[1] We note, however, that three levels of bidding credits are available to LMDS applicants. In the *Fifth NPRM,* the Commission sought comment on how to calculate unjust enrichment payments for LMDS licensees that are awarded bidding credits and subsequently partition or disaggregate to a larger business. It asked commenters to address whether the unjust enrichment payments should be calculated on a proportional basis, using population of the partitioned area and amount of

[1] We therefore do not need to consider the alternative proposals set forth by CellularVision and DBC concerning the handling of installment payments with respect to LMDS partitioning and disaggregation. See CellularVision Comments at 11–13; DBC Reply Comments at 5–6.

spectrum disaggregated as the objective measures.

24. *Discussion.* We recently adopted a provision in Part 1 of the Commission's Rules for all auctionable services that follows the approach set forth in the *Fifth NPRM* for calculating unjust enrichment payments in the context of partitioning and disaggregation. Thus, we will follow the uniform procedure set forth in Part 1 of our Rules and calculate unjust enrichment based on population for partitioned areas and on the amount of spectrum for disaggregated spectrum. We note that population will be calculated based upon the latest available census data. We have consistently adopted this approach for other wireless services, and we agree with WebCel that this approach provides an objective means of calculating unjust enrichment payments in the context of partitioning and disaggregation. For purposes of applying our unjust enrichment requirements when a combined partitioning and disaggregation is proposed, we will use a combination of both population of the partitioned area and amount of spectrum disaggregated to make these *pro rata* calculations.

G. Licensing

25. *Background.* Because partitioning and disaggregation involves the assignment of a portion of a licensee's service area or spectrum to another entity, in the *Fifth NPRM* the Commission proposed to treat the partitioning and disaggregation of LMDS licenses as assignments requiring its prior approval. It proposed to follow the existing assignment procedures set forth in Part 101 of our rules for purposes of reviewing LMDS partitioning and disaggregation transactions.

26. *Discussion.* We adopt the procedures set forth in our *Fifth NPRM* for review and approval of LMDS partitioning and disaggregation transactions. We agree with CellularVision that all LMDS partitioning and disaggregation agreements should be subject to our formal assignment process. We decline to adopt WebCel's proposal that we permit parties to enter into agreements to partition and disaggregate without prior Commission approval so long as notification is given to the Commission by the original LMDS licensee upon consummation of the transaction. Under WebCel's proposal, the original licensee would retain an ownership interest in the license and would continue to be responsible for compliance with the Commission's rules, maintaining records as to the spectrum allocated and geographic areas served by the different parties, and engaging in frequency coordination among all LMDS license holders within its BTA. WebCel states that this model would operate like a ''landlord-tenant-subtenant'' relationship. By contrast, we consider partitioning and disaggregation transactions to be partial assignments of license, for which Commission review and approval is necessary under Section 310(d) of the Communications Act.[2] Although arrangements such as that proposed by WebCel might be permissible, we note that the Commission requires that the licensee remain in control of its license, and for this determination, the Commission relies on the test announced in *Intermountain Microwave.* As a result, any arrangement that would result in a licensee losing control of its license pursuant to the *Intermountain Microwave* indicia would be inconsistent with our requirements for licensee responsibility.

27. WebCel's proposal also does not offer procedures for reviewing transactions where licensees desire to assign a portion of their market or spectrum outright to another entity and do not wish to hold the assigned portion. We thus believe that adoption of Webcel's approach would run counter to our goal of providing LMDS licensees with flexibility to structure partitioning and disaggregation transactions to meet their specific business plans. We conclude that WebCel's proposed model is not an appropriate construct for characterizing partitioning and disaggregation transactions. For these reasons, we will not adopt the alternative proposal suggested by WebCel. The procedures we adopt herein correspond to the procedures we have adopted for reviewing partitioning and disaggregation transactions in other wireless services. We find that adoption of similar partitioning and disaggregation procedures for all wireless services will provide regulatory parity, will permit our processing staff to develop common forms and procedures for reviewing all partitioning and disaggregation applications, and will streamline and expedite the review of such applications.

28. We will require that parties seeking approval for an LMDS partitioning or disaggregation transaction follow the existing assignment procedures set forth in Part 101 of our Rules. Such applications will be placed on Public Notice and will be subject to petitions to deny. The LMDS licensee will be required to file an FCC Form 702 that is signed by both the licensee and the partitionee or disaggregatee. The partitionee or disaggregatee will also be required to file an FCC Form 430 to demonstrate its qualifications, unless a current FCC Form 430 is already on file with the Commission.

H. Other Matters

29. *Background.* In our *Second R&O,* we determined that two LMDS licenses, one for 1150 MHz and one for 150 MHz, would be awarded for each Basic Trading Area (BTA) and adopted an eligibility restriction that prohibits incumbent LECs and incumbent cable companies from obtaining an attributable interest in in-region 1,150 MHz LMDS licenses for three years. We stated, however, that incumbent LECs and incumbent cable companies could obtain LMDS licenses at auction and use partitioning as a means to divest an overlapping portion of the BTA to comply with the eligibility restrictions. In its comments, WebCel argues that the Commission should reconsider this action and should not permit incumbent LECs and cable companies to use partitioning as a means of curing eligibility problems.

30. *Discussion.* We decided the issue of whether we should permit incumbent LECs and cable companies to use partitioning to come into compliance with the eligibility restrictions in our *Second R&O.* The purpose of our *Fifth NPRM* was not to revisit this issue but to decide the mechanics of implementing partitioning and disaggregation for LMDS. Therefore, we find that, while they were styled as ''Comments,'' a portion of WebCel's pleading is actually an untimely-filed petition for reconsideration of the eligibility rules from our *Second R&O.* We agree with Bell Atlantic, RTG and Sprint that this portion of WebCel's Comments should not be considered in this phase of the proceeding. In this connection, we addressed WebCel's arguments in the *Third Order on Reconsideration* in this proceeding and affirmed the divestiture provision.

[2] 47 U.S.C. 310(d). We note that we recently determined that we would forbear from applying our procedures for reviewing *pro forma* transfers of control and assignments of license involving wireless telecommunications carriers and we decided to allow these carriers to simply notify the Commission after the *pro forma* transaction has been consummated. See Federal Communications Bar Association's Petition for Forbearance from Section 310(d) of the Communications Act Regarding Non-Substantial Assignments of Wireless Licenses and Transfers of Control Involving Telecommunications Carriers, *Memorandum Opinion and Order,* FCC 98–18 (February 4, 1998). However, partitioning and disaggregation transactions are not *pro forma* in nature and, therefore, the rationale we followed in that proceeding would not apply here.

31. We conclude that the rules we adopt herein will provide LMDS licensees with the flexibility to structure partitioning and disaggregation agreements which meet their business needs. We have followed the general framework for partitioning and disaggregation that we have previously adopted for other wireless services in an effort to create regulatory parity among all licensees. As with the other service and licensing rules we have adopted for LMDS, we believe that this action will result in more efficient use of spectrum, will increase opportunities for small businesses and other entities to enter the LMDS marketplace, and will speed service to unserved areas.

I. PROCEDURAL MATTERS

A. Regulatory Flexibility Act

32. The Final Regulatory Flexibility Analysis pursuant to the Regulatory Flexibility Act, 5 U.S.C. 604, is contained in the attachment.

B. Ordering Clauses

33. Accordingly, it is ordered that, pursuant to the authority of Sections 4(i), 303(g), 303(r), and 332(a) of the Communications Act of 1934, as amended, 47 U.S.C. 154(i), 303(g), 303(r), and 332(a), § 101.1111 of the Commission's Rules, 47 CFR 101.1111, is amended as set forth in the rule changes attachment.

34. It is further ordered that the rule change adopted herein shall become effective July 13, 1998. This action is taken pursuant to Sections 4(i) and 303(r) of the Communications Act of 1934, as amended, 47 U.S.C. 154(i) and 303(r).

35. It is further ordered that the Director, Office of Public Affairs, shall send a copy of this *Fourth Report and Order*, including the Final Regulatory Flexibility Analysis, to the Chief Counsel for Advocacy of the Small Business Administration, in accordance with Section 605(b) of the Regulatory Flexibility Act, 5 U.S.C. 601(a).

List of Subjects in 47 CFR Part 101

Communications equipment, Radio.

Federal Communications Commission.

Magalie Roman Salas,

Secretary.

Rule Changes

Part 101 of title 47 of the Code of Federal Regulations is amended as follows:

PART 101—FIXED MICROWAVE SERVICES

1. The authority citation for part 101 continues to read as follows:

Authority: 47 U.S.C. 154, 303.

2. Section 101.1111 is revised to read as follows:

§ 101.1111 Partitioning and disaggregation.

(a) *Definitions.—Disaggregation.* The assignment of discrete portions or ''blocks'' of spectrum licensed to a geographic licensee or qualifying entity.

Partitioning. The assignment of geographic portions of a licensee's authorized service area along geopolitical or other boundaries.

(b) *Eligibility.* (1) Parties seeking approval for partitioning and disaggregation shall request an authorization for partial assignment of a license pursuant to § 101.53. Parties shall submit the forms set forth in § 101.15(e).

(2) Licensees may apply to partition their licensed geographic service area or disaggregate their licensed spectrum at any time following the grant of their licenses.

(c) *Technical Standards.*—(1) *Partitioning.* In the case of partitioning, requests for authorization for partial assignment of a license must include, as an attachment, a description of the partitioned service area. The partitioned service area shall be defined by coordinate points at every 3 degrees along the partitioned service area unless an FCC recognized service area is utilized (*i.e.*, Major Trading Area, Basic Trading Area, Metropolitan Service Area, Rural Service Area or Economic Area) or county lines are followed. The geographic coordinates must be specified in degrees, minutes, and seconds to the nearest second of latitude and longitude and must be based upon the 1983 North American Datum (NAD83). In the case where an FCC recognized service area or county lines are utilized, applicants need only list the specific area(s) (through use of FCC designations or county names) that constitute the partitioned area. In such partitioning cases where an unjust enrichment payment is owed the Commission, the request for authorization for partial assignment of a license must include, as an attachment, a calculation of the population of the partitioned service area and the licensed geographic service area.

(2) *Disaggregation.* Spectrum may be disaggregated in any amount.

(3) *Combined Partitioning and Disaggregation.* The Commission will consider requests for partial assignment of licenses that propose combinations of partitioning and disaggregation.

(d) *License Term.* The license term for a partitioned license area and for disaggregated spectrum shall be the remainder of the original licensee's license term as provided for in § 101.67 of this chapter.

(e) *Construction Requirements.* Applications requesting approval for partitioning or disaggregation must include a certification by each party that it will satisfy the construction requirement set forth in § 101.1011 of this chapter. Failure by a party to meet its respective construction requirement will result in the automatic cancellation of its license without further Commission action.

Note: The following attachment will not appear in the Code of Federal Regulations.

Attachment—Final Regulatory Flexibility Analysis

As required by Section 603 of the Regulatory Flexibility Act (RFA), 5 U.S.C. 603, an Initial Regulatory Flexibility Analysis (IRFA) was incorporated in the Fifth Notice of Proposed Rule Making (*Fifth NPRM*) in CC Docket No. 92–297. The Commission sought written public comment on the proposals in the *Fifth NPRM*, including the IRFA. The Commission's Final Regulatory Flexibility Analysis in this *Fourth Report and Order (Fourth R&O)* conforms to the RFA, as amended by the Contract With America Advancement Act of 1996.

A. Need for and Purpose of This Action

In the *Fourth R&O*, the Commission modifies the Local Multipoint Distribution Service (LMDS) rules to permit partitioning and disaggregation for all licensees. With more open partitioning and disaggregation, additional entities, including small businesses, may participate in the provision LMDS without needing to acquire wholesale an existing license (with all of the bundle of rights currently associated with the existing license). Acquiring ''less'' than the current license will presumably be a more flexible and less expensive alternative for entities desiring to enter these services.

B. Summary of Issues Raised in Response to the Initial Regulatory Flexibility Analysis

None of the commenters submitted comments that were specifically in response to the IRFA.

C. Description and Number of Small Entities Involved

The rules adopted in the *Fourth R&O* will affect all small businesses which avail themselves of these rule changes, including small businesses that will obtain LMDS licenses through auction and subsequently decide to partition or disaggregate, and small businesses who may acquire licenses through partitioning and/or disaggregation.

The Commission has not developed a definition of small entities applicable to LMDS. In the *Second Order on Reconsideration*, the Commission adopted criteria for defining small businesses for purposes of determining eligibility for special provisions such as bidding credits. The Commission has adopted a three-tier definition of small businesses: businesses with gross annual revenues of not more than

$15 million, businesses with gross annual revenues of more than $15 million but not more than $40 million and businesses with gross revenues of more than $40 million but not more than $75 million. We will use these definitions for estimating the potential number of entities choosing to partition or disaggregate or who may acquire licenses through partitioning and disaggregation that are small businesses.

It is not possible to predict how many LMDS licensees meeting one of the above definitions will be successful at auction and subsequently decide to partition or disaggregate. The Commission plans to issue 2 licenses each for 493 Basic Trading Areas (BTAs). Thus, 986 licenses will be made available for authorization. It is expected that a significant number of successful bidders in the LMDS auction will satisfy one of the above definitions. There is only one company, CellularVision USA, Inc. (CellularVision), that is currently providing LMDS video services. Although the Commission does not collect data on annual receipts, it is assumed that CellularVision is a small business under all of the above outlined definitions. Similarly, it is not possible to determine how many of those entities obtaining licenses through partitioning and disaggregation will meet one of the above definitions. However, it is expected that many entities meeting one of the above definitions will use partitioning and disaggregation as a means to obtain LMDS licenses at lower costs.

D. Summary of Projected Reporting, Recordkeeping and Other Compliance Requirements

The rules adopted in the *Fourth R&O* will impose reporting and recordkeeping requirements on small businesses seeking licenses through partitioning and disaggregation. The information requirements will be used to determine whether the licensee is a qualifying entity to obtain a partitioned license or disaggregated spectrum. This information will be given in a one-time filing by any applicant requesting such a license. The information will be submitted on the FCC Form 702 which is currently in use and has already received Office of Management and Budget clearance. The Commission estimates that the average burden on the applicant is three hours for the information necessary to complete these forms. The Commission estimates that 75 percent of the respondents (which may include small businesses) will contract out the burden of responding. The Commission estimates that it will take approximately 30 minutes to coordinate information with those contractors. The remaining 25 percent of respondents (which may include small businesses) are estimated to employ in-house staff to provide the information.

E. Steps Taken To Minimize Burdens on Small Entities

The rules adopted in the *Fourth R&O* are designed to implement Congress' goal of giving small businesses, as well as other entities, the opportunity to participate in the provision of spectrum-based services and are consistent with the Communications Act's mandate to identify and eliminate market entry barriers for entrepreneurs and small businesses in the provision and ownership of telecommunications services.

Allowing non-restricted partitioning and disaggregation will facilitate market entry by parties who may lack the financial resources for participation in auctions, including small businesses. Some small businesses may have been unable to obtain LMDS licensees through auction due to high bidding. By allowing open partitioning and disaggregation, small businesses will be able to obtain licenses for smaller service areas and smaller amounts of spectrum at presumably reduced costs, thereby providing a method for small businesses to enter the LMDS marketplace.

Allowing geographic partitioning of LMDS licenses by service areas defined by the parties will provide an opportunity for small businesses to obtain partitioned LMDS license areas designed to serve smaller, niche markets. This will permit small businesses to enter the LMDS marketplace by reducing the overall cost of acquiring a partitioned LMDS license.

Allowing disaggregation of spectrum in any amount will also promote participation by small businesses who may seek to acquire a smaller amount of LMDS spectrum tailored to meet the needs of their proposed service.

F. Significant Alternatives Considered and Rejected

The Commission considered and rejected the following alternative proposals concerning LMDS partitioning and disaggregation.

The Commission rejected a plan set forth by WebCel Communications, Inc. (WebCel). Instead of requiring all partitioning and disaggregation transactions to comply with our existing assignment procedures, WebCel suggested that the Commission permit parties to enter into agreements to partition and disaggregate without prior Commission approval so long as notification is given to the Commission by the original LMDS licensee. The Commission considers partitioning and disaggregation transactions to be essentially partial assignments of license, and Commission review and approval is necessary to ensure compliance with its rules. Thus, the Commission concluded that WebCel's proposed model is not an appropriate construct for characterizing partitioning and disaggregation transactions.

Finally, the Commission rejected a suggestion by CellularVision that LMDS partitionees and disaggregatees should be allowed to qualify for a renewal expectancy which is based upon their reduced license period. The Commission found that this approach would contradict its construction requirements for LMDS partitionees and disaggregatees which require these entities to meet a separate substantial service requirement by the end of their license term. Partitionees and disaggregatees are not permitted to meet a scaled-down substantial service construction requirement simply because of the fact that they had a license term of less than ten years. The Commission found that, by requiring LMDS partitionees and disaggregatees to meet the same substantial service requirement for renewal expectancy as all other licensees, LMDS licensees will be encouraged to quickly develop their markets and fully utilize their available spectrum.

G. Report to Congress

The Commission shall include a copy of this Final Regulatory Flexibility Analysis, along with this *Fourth R&O*, in a report to be sent to Congress pursuant to the Small Business Regulatory Enforcement Fairness Act of 1996, 5 U.S.C. 801(a)(1)(A).

[FR Doc. 98–12667 Filed 5–8–98; 5:08 pm]

BILLING CODE 6712–01–U

DEPARTMENT OF TRANSPORTATION

National Highway Traffic Safety Administration

49 CFR Part 553

[NHTSA–98–3815]

RIN 2127–AG62

Rulemaking Procedures

AGENCY: National Highway Traffic Safety Administration (NHTSA), Department of Transportation (DOT).

ACTION: Final rule.

SUMMARY: This final rule reaffirms the agency's policy of focusing its international harmonization activities on identifying and adopting those foreign vehicle safety standards that clearly reflect best practices, i.e., that require significantly higher levels of safety performance than the counterpart U.S. standards. This final rule also announces the agency's policy regarding those instances in which the agency's comparison of standards indicates that the safety performance required by a foreign standard is not significantly higher, but is still better than or at least as good as that required by the counterpart U.S. standard.

To aid in implementing these policies, this final rule amends the agency's regulation concerning rulemaking procedures to set forth the process that the agency will use in comparing U.S. and foreign vehicle safety standards and in determining what rulemaking response, if any, is appropriate. The agency will assess whether the safety performance of vehicles or equipment manufactured under the foreign standard is better than or at least functionally equivalent to that of vehicles or equipment manufactured under the U.S. standard, i.e., whether the vehicles or equipment manufactured under the foreign standard produce more or at least as many safety benefits

as those produced by the vehicles or equipment manufactured under the U.S. standard.

This final rule also emphasizes that the agency's policy is to deny any rulemaking petition seeking to have a foreign standard added to its counterpart U.S. standard as a compliance alternative or to harmonize the U.S. standard with the foreign standard if the petition does not contain an analysis of the relative benefits of the two standards. This policy is necessary to minimize the impact that NHTSA's consideration of such rulemaking petitions might otherwise have on the agency's use of its resources to upgrade its safety standards.

DATES: Effective Date: The amendments become effective on May 13, 1998.

Petitions for reconsideration: Petitions for reconsideration must be received by June 29, 1998.

ADDRESSES: Petitions should refer to the docket and notice number of this notice and be submitted to: The Administrator, National Highway Traffic Safety Administration, 400 Seventh Street, SW, Washington, DC 20590.

FOR FURTHER INFORMATION CONTACT: For technical and policy issues: Ms. Julie Abraham, Office of International Harmonization, National Highway Traffic Safety Administration, 400 Seventh Street, SW, Washington, DC 20590. Telephone: (202) 366–2114. Fax: (202) 366–2106.

For legal issues: Rebecca MacPherson, Attorney Advisor, Office of Chief Counsel, NCC–20, National Highway Traffic Safety Administration, 400 Seventh Street, SW, Washington, DC 20590. Telephone: (202) 366–2992. Fax: (202) 366–3820.

SUPPLEMENTARY INFORMATION:

Table of Contents

I. Overview
II. Guiding principles for the harmonization of standards and the amendment of standards based on claims of functional equivalence
III. Policy statement concerning functional equivalence
A. Background
B. November 1996 request for comments
C. Summary of oral and written comments on November 1996 notice
D. Pending rulemaking petitions based on claims of functional equivalence
E. Policy statement
1. General description
2. The process as it will be applied in the United States
IV. Draft UN/ECE agreement on global technical regulations; public participation
V. Rulemaking analyses and notices
A. Executive Order 12866 and DOT regulatory policies and procedures
B. Regulatory Flexibility Act
C. National Environmental Policy Act
D. Executive Order 12612 (Federalism)
Regulatory text

I. Overview

This final rule reaffirms the agency's policy of focusing its international harmonization activities on identifying and adopting those foreign vehicle safety standards that clearly reflect best practices, i.e., that require significantly higher levels of safety performance than the counterpart U.S. standard. NHTSA's policy is to pick the best standard in those instances. This final rule also announces the agency's policy regarding instances in which the agency's comparison of standards indicates that the safety performance required by a foreign standard is not significantly higher, but is still better than or at least as good as that required by the counterpart U.S. standard. In those instances, the agency will consider the possibility of amending the U.S. standard to allow manufacturers to comply with either standard or to harmonize the U.S. standard with the foreign standard.

To aid in implementing these policies, this final rule amends the agency's regulation concerning rulemaking procedures by adding an appendix that sets forth the process that the agency will use in comparing U.S. and foreign vehicle safety standards and in determining what rulemaking response, if any, is appropriate. In the first instance, NHTSA will follow this process in determining whether to commence a rulemaking proceeding on the basis that the mandatory requirements of a foreign motor vehicle safety standard appear to be better than or at least functionally equivalent to those of a Federal Motor Vehicle Safety Standard (FMVSS). If the agency commences a rulemaking proceeding, it will follow the same process in comparing the safety performance of vehicles or equipment produced under the two standards, and then in determining whether the foreign standard is, in fact, better than or at least functionally equivalent to the U.S. standard. This determination would be made by assessing whether the vehicles or equipment manufactured under the foreign standard produce more or at least as many safety benefits as the vehicles or equipment manufactured under the U.S. standard. This assessment would be made on the basis of real world data concerning benefits, or, if such data are unavailable, on the basis of either compliance test data or data generated by additional research and development.

This final rule emphasizes that there will be appropriate opportunities for public participation. Any rulemaking notice that proposes to amend a safety standard and that is based on a tentative determination of functional equivalence will be subject to the notice and comment requirements of the Administrative Procedure Act and all applicable substantive statutory criteria, most notably the requirement that the standards meet the need for motor vehicle safety.

This final rule also emphasizes that the agency's policy is to deny any rulemaking petition seeking to have a foreign standard added to its counterpart U.S. standard as a functionally equivalent compliance alternative or to harmonize the U.S. standard with the foreign standard if the petitioner does not provide an analysis, based to the extent practicable on crash data, comparing safety performance under the two standards and supporting the making of a determination that the foreign standard is, in fact, better or at least functionally equivalent. This policy is necessary to minimize the impact that NHTSA's consideration of rulemaking petitions involving such functional equivalence claims might otherwise have on the agency's use of its finite resources to upgrade its safety standards.

Finally, since the agency's priority in international harmonization is to focus on those foreign safety standards that represent best practices, NHTSA will give priority to petitions requesting the upgrading of one of its standards to the level of a superior foreign standard over petitions simply asking the agency to add a compliance alternative, if resource limitations necessitate making a choice between competing petitions in granting or processing them.

II. Guiding Principles for the Harmonization of Standards and the Amendment of Standards Based on Functional Equivalence

At the April 1996 Transatlantic Automotive Industry Conference on International Regulatory Harmonization [1] in Washington, DC,

[1] At that conference, the United States-European Union automotive industry met and developed recommendations to the United States and European Union on international harmonization and the intergovernmental regulatory process needed to achieve such harmonization. One of the recommendations was to develop a process for agreeing upon ''functional equivalence'' of dissimilar existing standards addressing the same aspect of performance. Martin Bangemann, the European Industry Commissioner on the European Commission, said at the conference that a first step toward achieving common standards between the

Continued

NHTSA emphasized that three goals must remain of primary importance as the agency explores the possibility of harmonizing its standards[2] with those of other countries and regions in appropriate circumstances. First, the agency must ensure that there is no degradation of the safety provided by a regulation as a result of achieving harmonization. Second, the agency must preserve the quality and transparency of its regulatory process by inviting all interested parties to be heard and duly considered, including the general public. Third, the agency must preserve its ability to respond, through future rulemaking, to changing safety technology and problems and make appropriate improvements in its safety standards. NHTSA noted that the same goals must be met by the agency in considering whether a foreign motor vehicle safety standard is better than or at least functionally equivalent to its counterpart FMVSS.

This notice reaffirms those goals and emphasizes the agency's top priority in its vehicle safety rulemaking activities will remain the development and adoption of more effective and beneficial safety standards.

III. Policy Statement Concerning Functional Equivalence

A. Background

The harmonization of product standards has become a matter of increasing importance in the last several decades. The manufacturing and marketing of products have become increasingly globalized. In response to that trend, countries and regions have moved to adjust and coordinate their regulatory practices to the extent consistent with consumer protection policies. Efforts to coordinate regulatory practices on a global scale have resulted in several international agreements that seek to promote and guide the process of harmonization, while taking care to preserve the right of countries and regions to adopt and maintain standards they believe necessary to address safety, environmental and other needs within their respective jurisdictions.

The GATT Agreement on Technical Barriers to Trade (TBT), known as the Standards Code, was negotiated during the Tokyo Round of General Agreement on Tariffs and Trade Multinational Trade Negotiations, and implemented in this country by the Trade Agreements Act of 1979 (Pub. L. 103–465; 19 U.S.C. 2531–2582). A new TBT agreement was reached as a result of the General Agreement on Tariffs and Trade Uruguay Round of Multinational Trade Negotiations. The Uruguay Round Agreements, which were concluded in early 1994, established the World Trade Organization. Article 2.7 of the new TBT Agreement provides that members of the World Trade Organization:

> Shall give positive consideration to accepting as *equivalent* technical regulations of other Members, even if these regulations differ from their own, *provided they are satisfied that these regulations adequately fulfill the objectives of their own regulations*.

(Emphasis added.)

At the Transatlantic Business Dialogue Conference (TABD), held in Seville, Spain in late 1995, participants made a series of joint recommendations aimed at building a stronger framework for trade between the United States and the European Union. Later that year, at the Madrid Summit, President Clinton signed a joint United States-European Union ''New Transatlantic Agenda,'' which was based in part on the TABD recommendations. The Agenda called for strengthening regulatory cooperation and addressing technical and non-tariff barriers to trade resulting from divergent regulatory processes. Within the framework of action established by the Agenda, a Joint United States-European Union Action Plan was issued. Among its goals are facilitating international regulatory harmonization, taking into account the respective policies of the United States and European Union concerning safety and environmental protection. The April 1996 Transatlantic Automotive Industry Conference on International Regulatory Harmonization, mentioned above in part I, built on the TABD recommendations and Action Plan by generating specific recommendations regarding harmonization and regulatory coordination in the automotive sector.

At the 15th International Technical Conference on Enhanced Safety of Vehicles (ESV), held in May 1996 in Melbourne, Australia, participating countries adopted the International Harmonized Research Agenda (IHRA). One of the six research priorities was developing the technical and scientific aspects of an acceptable model for assessing relative benefits and determining the functional equivalence of existing regulatory requirements. The United States and Australia were designated as the lead countries for this developmental activity. The other research priorities seek improvements in such areas of vehicle safety as biomechanics, advanced offset frontal crash protection, vehicle compatibility, Intelligent Transportation Systems (ITS), and pedestrian safety.

In response to these events, NHTSA published a notice requesting comments on the recommendations made by the United States/European Union automotive industry at the April 1996 Transatlantic Automotive Industry Conference on International Regulatory Harmonization in Washington, D.C. (61 FR 30657; June 17, 1996). The agency stated that the comments would assist it in determining how to respond to those recommendations as well as ensuring that harmonization does not result in any degradation of safety or environmental protection in the United States. One of the specific requests was for comments on issues relating to the development of a process for determining the functional equivalence of the vehicle safety standards of different countries and regions.

Written comments on the June 1996 notice were submitted by the American Automobile Manufacturers Association (AAMA), Association of International Automobile Manufacturers, Inc., (AIAM), Truck Manufacturers Association (TMA), Coalition of Small Volume Automobile Manufacturers (COSVAM), Coalition for Vehicle Choice (CVC), Consumers Union (CU), Center for Auto Safety, American Insurance Association (AIA), Insurance Institute for Highway Safety (IIHS), Congressman Tom Sawyer, and Advocates for Highway Safety (Advocates).

The commenters focused their comments on the general issue and consequences of standards harmonization. Many emphasized that the agency should not permit any reduction in safety to occur as a result of any rulemaking based on a determination of functional equivalence or any other rulemaking seeking to harmonize standards. Both manufacturers' associations and public interest groups stated that a foreign standard should be determined to be at least functionally equivalent to a counterpart U.S. standard only if the foreign standard provides at least the same level of protection. In no event, IIHS and several consumers groups said, should harmonization result in the adoption of lowest common denominator standards. These groups urged that the agency focus its harmonization efforts on raising the level of U.S. standards to the level of the best practices worldwide. AIAM urged the agency not to adopt a rigid

---

United States and the European Union could be an intermediate one of mutual recognition of another country's standards, provided that they were determined to be at least functionally equivalent.

[2] As used in this notice, the term ''standard'' refers to mandatory requirements and thus has the same meaning given the term ''technical regulation'' in Annex 1 to the World Trade Organization Technical Barriers to Trade Agreement.

definition of functional equivalence and made several suggestions for promoting the future evolution of the concept of functional equivalence.

B. November 1996 Request for Comments

On November 14, 1996, NHTSA published in the **Federal Register** a generic flowchart describing a process for use by the regulatory agencies of the United States and other countries in making determinations of functional equivalence of vehicle safety standards (61 FR 58362). The agency developed the flowchart based on the comments on the June notice and other available information. The November notice announced plans for a January 1997 public workshop to discuss the flowchart and solicited the submission of written comments following the workshop. The agency said that the public input would assist the agency in deciding its future course of action regarding international harmonization, specifically the determination of functional equivalence as outlined in the International Harmonized Research Agenda (IHRA). The IHRA was established in meetings held in conjunction with the May 1996 International Technical Conference on the Enhanced Safety of Vehicles (ESV) in Australia. The notice also announced that NHTSA would be developing requirements and procedures regarding petitions for rulemaking based on a claim of functional equivalency.

C. Summary of Oral and Written Comments on November 1996 Notice

The January 1997 workshop was attended by representatives of U.S. and Canadian governmental agencies, motor vehicle manufacturers, equipment manufacturers, insurance groups and consumer interest groups. The attendees included the U.S. Environmental Protection Agency, U.S. Department of Commerce, Transport Canada, Industry Canada, AAMA, AIAM, Association des Constructeurs Européens d'Automobiles (ACEA), Ford, General Motors, Chrysler, Toyota, Land Rover, Volkswagen, Mitsubishi, BMW, Motor Vehicle Equipment Manufacturers Association, Lear, Jetro, Sierra Products, Truck-Lite, Auto Occupant Restraint Council, Rubber Manufacturers Association, Transportation Safety Equipment Institute, IIHS, Advocates, and American Insurance Association (AIA).

After the workshop, the agency received six written comments on the November 1996 notice. The commenters were American Suzuki Motor Corporation (Suzuki), CU, Advocates, Sierra Products, Inc., Sekurit Saint-Gobain, and Nissan North America, Inc. (Nissan).

The highlights of the oral and written comments are set forth below.

Nissan expressed concern that the proposed process may rely too much on estimates of real world safety benefits and compliance test data as bases for determining functional equivalence:

> In most cases, such data would have to developed specially to enable a comparison, and it would be rather difficult for most of the countries to develop them through research, because of cost, limited resources, etc. The approach of relying primarily on a comparison of safety benefits would not be a realistic means of demonstrating functional equivalence* * * .

Suzuki expressed a similar concern. In a related comment, Chrysler stated that quantification of real world safety benefits may be impossible in the case of the crash avoidance standards. The relative merits of two different crash avoidance standards addressing the same safety need would be much easier to assess in terms of their impact on vehicle or equipment performance (an input measure) instead of their impact on the number of crashes or of deaths and injuries (an output measure).

AIAM stated that the proposed process fails to include consideration of what it termed the ''same design approach.'' AIAM noted that the AAMA functional equivalence process includes that concept. That organization argued that, given difficulty of measuring output, i.e., benefits, NHTSA should consider input, as represented by similarity of design approaches.

Advocates said that the process should include a statement of NHTSA's commitment to upgrading the FMVSSs when the agency determines that the benefits of a foreign standard are greater than those of the counterpart FMVSS:

> * * *if the FE process is to provide any significant safety benefit to the public, upgrading safety standards must be treated as a mandatory requirement, not as a secondary or optional activity.

CU supported the concept of a functional equivalence determination process that would result in both increased safety and increased efficiency and stated that the proposed process could be an appropriate procedure toward that end. IIHS and AIA agreed that the ultimate goal should be higher standards.

Commenters differed as to whether the issues of determining functional equivalence and possibly increasing the stringency of a FMVSS should be considered in the same rulemaking proceeding. Advocates said that if the agency determines that a foreign standard offers greater benefits, the agency should conduct a single rulemaking proceeding that results in upgrading the counterpart FMVSS. NHTSA should not, according to that group, conduct two separate, sequential rulemaking proceedings: the first one adding the foreign standard as a compliance alternative and a subsequent one upgrading that FMVSS. However, AAMA and Land Rover argued that there should be two separate rulemaking proceedings.

Advocates implicitly recognized that the upgrading of a FMVSS might not be appropriate in every instance in which the agency concludes that the counterpart foreign standard yields greater benefits. That organization noted that the upgrading of a FMVSS would be subject to public comment and other aspects of the typical rulemaking proceeding. Among other things, the agency would need to conduct a cost-benefit analysis to determine whether an upgrade would be worthwhile. Land Rover and Sierra Products agreed. Further, Advocates said that if NHTSA decides not to propose to upgrade a FMVSS found by the agency to yield fewer benefits than a counterpart foreign standard, the agency should explain why upgrading is not warranted.

AIAM, Ford and Advocates expressed support for the making of ''qualified functional equivalence determinations.'' As described by Advocates, such a determination would be made when NHTSA finds:

> That a particular foreign standard would be equivalent to the FMVSS counterpart if an additional requirement contained in the FMVSS is also required. This qualified acceptance is appropriate where the two standards are functionally equivalent in terms of the estimated safety benefits, but the FMVSS standard contains a specific provision or practice that is not required under the foreign standard.

Advocates expressed concern that, by focusing on the level of safety benefits of counterpart standards, the process might lead the agency to overlook important differences between standards:

> Advocates is concerned that distinctly different standards with important safety differences will be treated as equivalent simply because the overall estimate of benefits is comparable (or one is greater than the other). A process that is focused only on a single performance measure, *i.e.*, total *quantitative* safety benefit, will overlook important qualitative differences in approach that benefit different vehicle occupants, benefit occupants in different ways, or accrue to non-occupants, *i.e.*, pedestrians.

Finally, Advocates urged that the agency adopt a policy ensuring that

rulemaking petitions based on a claim of functional equivalence will be granted only when it will not interfere with other agency activities and not delay other pending rulemakings. To that end, that organization urged that petitioners be required to submit sufficient data and analysis to support their petitions. Transport Canada and IIHS expressed similar concerns.

D. Pending Rulemaking Petitions Based on a Claim of Functional Equivalence

NHTSA notes that it has already received several petitions based on claims of functional equivalence. The AAMA has already petitioned the agency to amend several of the FMVSSs, on the basis that their European counterparts are functionally equivalent, to provide the alternative of complying with those European standards. The FMVSSs include FMVSS 103, Windshield Defrosting and Defogging Systems; FMVSS 104, Windshield Wiping and Washing Systems; the headlamp concealment device requirements in FMVSS 108, Lamps, Reflective Devices, and Associated Equipment; FMVSS 202, Head Restraints; and FMVSS 209, Seat Belt Assemblies. Noting that the petitions were not accompanied by sufficient data and analysis, the agency informed the petitioner that additional materials were needed in order to assess the merits of the petition.

Additionally, the AAMA, AIAM and IIHS have jointly petitioned the agency to amend FMVSS 214, Side Impact Protection, to give vehicle manufacturers the option of complying with either current FMVSS 214 or the counterpart European standard during a 7-year period. The petition also requested that, at the end of the 7-year period, compliance with the European standard become mandatory.

E. Policy Statement

1. General Description

NHTSA is amending Part 553, Rulemaking Procedures, by adding a new Appendix B setting forth the process it intends to follow in considering whether to commence a rulemaking proceeding based on a claim that a foreign motor vehicle safety standard is better than or at least functionally equivalent to its counterpart among the FMVSSs and in making determinations about relative benefits and functional equivalence. The process is set forth in the form of a flowchart and accompanying explanation.

The agency believes that the process in Appendix B meets the concerns expressed at the public workshop and in the written public comments. The process is essentially the same as the generic process published by the agency in November 1996 for public comment, except for several clarifying or simplifying changes.

The generic process, which refers to ''Country A'' and ''Country B,'' has been modified for the purpose of its application by this country. The reference to ''Country A'' has been replaced by a reference to ''NHTSA,'' so that the process as adopted in this final rule refers to ''NHTSA'' and ''Country B.'' The rulemaking box, formerly located in the upper left corner of the chart, has been combined with a similar box located in the upper center of the chart. The agency has eliminated the references to three notes formerly included in the explanation. Those notes became unnecessary after the agency expanded the discussion within the rulemaking box and the discussion elsewhere in the explanation of the chart. As recognized at the public workshop, any rulemaking to upgrade a FMVSS would have to satisfy statutory criteria for establishing a FMVSS and would be subject to the provisions of Executive Order 12866 regarding the analysis of costs and benefits. This has been reflected in discussion in the rulemaking box in the upper center of the chart. Per a request by AAMA, descriptive titles have been added to some of the key decision points in the chart.

Neither the chart nor its explanation has been modified to include a reference to the ''design approach'' of determining functional equivalence, as suggested by AIAM. As agency personnel noted at the workshop, consideration of compliance test data would be necessary to determine objectively whether various design approaches are really the same. The chart already provides for consideration of compliance test data as a method of determining relative benefits and functional equivalence.

The explanation that accompanies the chart in Figure 1 has been expanded to describe how the functional equivalence process would affect each stage of a rulemaking proceeding. In response to concerns expressed about the suitability of the process for comparing crash avoidance standards, the explanation has been revised to note that the types of benefits examined in comparing two standards might differ depending on whether the standards are crash avoidance standards or crashworthiness standards. Translating differences in performance (an input measure) into numbers of crashes or numbers of deaths and injuries (output measures) is more difficult in the case of crash avoidance standards. Thus, while the relative benefits of two crashworthiness standards would typically be assessed in terms of their impacts on deaths and injuries in crashes, the relative merits of two different crash avoidance standards might well be assessed in terms of their impact on measured vehicle or equipment performance.

The explanation accompanying the flowchart also emphasizes the flexibility of the process that will be employed by this agency. For example, if one type of data specified in the flowchart were unavailable, a petitioner's request for a functional equivalency determination will not automatically be rejected. Instead, the petitioner should submit analyses based on the types of specified data which either are available or can be produced by means of additional testing or research that can be performed within a reasonable time and at a reasonable cost.

2. The Process as it Will Be Applied in the United States

- Determining whether to grant the petition. NHTSA is announcing in this notice that it will not grant any rulemaking petition seeking to have a foreign standard added to its counterpart U.S. standard as a compliance alternative on the basis that the foreign standard is better than or at least functionally equivalent to the U.S. standard or to harmonize the U.S. standard with the foreign standard, if the petition is not accompanied by an analysis of the relative benefits of the two standards. The analysis must be based, to the extent practicable, on crash data, compare safety performance under the two standards, and support the making of a determination, in accordance with the process described in the flowchart in Figure 1 of Appendix B to Part 553 of Title 49 CFR, that the foreign standard is better or at least functionally equivalent to the U.S. standard. This policy is necessary to preserve the agency's ability to focus its resources on its priorities. Part 552 of Title 49 CFR, Petitions for rulemaking, defect and noncompliance orders, expressly provides that, in making a decision whether to grant a petition for rulemaking, the agency may consider a variety of factors, include agency priorities and allocation of agency resources. See Section 552.8.

Upon receiving a sufficiently supported rulemaking petition asking NHTSA to amend a FMVSS based on a claim that a foreign standard is better than or at least functionally equivalent to that FMVSS, the agency will consider the merits of the petition in accordance

with Part 552 and with the functional equivalence process set forth in the flowchart. If it appears that there is reason to believe that the foreign standard provides greater or at least equivalent safety benefits than the FMVSS, and if adding an alternative compliance alternative does not appear likely to create an unacceptable enforcement burden, the agency will likely grant the petition and commence a rulemaking proceeding.

However, the agency emphasizes that its priority with respect to international harmonization is identifying and adopting those foreign safety standards that represent best practices. Accordingly, if resource limitations make it necessary to chose between competing petitions, the agency would give priority to granting a petition asking the agency to upgrade one of its standards to the level of a superior foreign standard over granting another petition simply asking the agency to add a compliance alternative. The agency would follow the same priorities in processing the petitions it grants. Finally, NHTSA notes that the granting of a petition does not signify that the rule in question will be issued, but rather that the petition appears to merit a fuller comparison of performance under the two standards and, if appropriate, the development of a proposal for public comment.

• Development of proposal. If NHTSA grants the petition, it will proceed, as in any other rulemaking regarding the FMVSSs, to determine whether amending a FMVSS would be appropriate under the applicable statutory criteria in chapter 301 of title 49, U.S.C. Following the process set forth in the flowchart, the agency will use the analysis and data submitted by the petitioner, supplemented by data from other sources, to compare performance and tentatively determine whether the foreign standard specified in the petition is better than or at least functionally equivalent to the FMVSS specified in the petition.

The comparison could have a variety of possible outcomes:

• *The comparison may indicate that the foreign standard's safety benefits are less than those of the counterpart FMVSS.* If the comparison indicates that the foreign standard results in fewer safety benefits than the counterpart FMVSS, NHTSA will terminate the rulemaking proceeding.

• *The comparison may indicate that the foreign standard's safety benefits are approximately equal to those of the counterpart FMVSS.* If the comparison indicates that the safety benefits of a foreign standard are approximately equal to those of a FMVSS, NHTSA will tentatively determine that the foreign standard is at least functionally equivalent to the FMVSS and take one of two possible steps in most instances. One possibility is that it will develop a notice of proposed rulemaking (NPRM) proposing to amend the FMVSS by adding the foreign standard as an alternative to the existing requirements of the FMVSS.[3] The other possibility is that the agency will develop an NPRM proposing to harmonize the FMVSS with the foreign standard. The second approach would enable NHTSA to maintain a single set of requirements and test procedures in its standard, thereby minimizing any drain on its enforcement resources. An additional possibility that might be considered in some instances would be ''qualified functional equivalence.'' Under this third approach, the agency would regard Country B's standard to be functionally equivalent if it is supplemented by a specified requirement in the counterpart FMVSS.

• *The comparison may indicate that the foreign standard's safety benefits are greater than those of the counterpart FMVSS.* If the comparison indicates that the foreign standard results in greater safety benefits than the counterpart FMVSS, and if upgrading the FMVSS is appropriate, based on the incremental benefits and costs and applicable statutory criteria, NHTSA will tentatively determine that the foreign standard has greater benefits and develop an NPRM proposing to upgrade the requirements of the FMVSS to the level of those in the foreign standard. The upgrading could be accomplished in a number of ways, such as by increasing the stringency of the requirements presently in the FMVSS or by replacing the provisions of the FMVSS with those of the foreign standard. If upgrading is not appropriate, NHTSA may propose to add the foreign standard to the FMVSS as an alternative compliance option to the existing requirements of the FMVSS. The proposal of such an option would include a statement of the basis for the agency's conclusion that upgrading the FMVSS is inappropriate.

If NHTSA issues an NPRM, it will request comment on the tentative determination and the proposed amendment.

• Final Rule Amending FMVSS. Any final decision to make a determination regarding relative benefits and functional equivalency and to amend the FMVSS will be made in accordance with the process in the flowchart and applicable law and only after careful consideration and analysis of the public comments.

IV. Draft UN/ECE Agreement on Global Technical Regulations; Public Participation

To provide for the development of global technical regulations for motor vehicles and motor vehicle equipment, the United States, the European Union, and Japan reached accord in March of this year on a text of an Agreement on Global Technical Regulations to supplement the existing revised 1958 United Nations/Economic Commission for Europe Agreement providing for uniform technical prescriptions for wheeled vehicles, equipment, and parts, as well as the conditions for reciprocal recognition of type approvals.[4] The draft text is subject to a final round of comment by governments participating in the UN/ECE Working Party on the Construction of Vehicles (known as Working Party 29) and other interested governments. The draft Agreement contains procedures for establishing global regulations by harmonizing existing regulations or by developing a new regulation. The new regulation might be one that yields more benefits than existing regulations addressing a particular problem or it might be an entirely new regulation, i.e., a regulation addressing a problem not addressed by any existing regulations.

In anticipation of the successful conclusion of efforts regarding the draft Agreement, NHTSA wishes to reaffirm its prior public statements about its commitment to transparency and public participation in connection with international harmonization activities. That commitment has guided the agency's work on the draft Agreement. The agency is cognizant of the 1991 recommendation by the Administrative Conference of the United States regarding ''Federal Agency Cooperation with Foreign Government Regulators'' (Recommendation 91–1). The Conference recommended that:

> (w)here appropriate, agencies should, so far as considerations of time and international relations permit, afford affected private and public interests timely notice of any formal system of collaboration with foreign regulatory bodies that exists and an opportunity where reasonable to participate

[3] NHTSA might have to modify or supplement the test procedures in the foreign standard to comply with the requirements in NHTSA's authorizing statute that FMVSSs be practicable and be stated in objective terms.

[4] Public notice that NHTSA and the Environmental Protection Agency would participate in negotiations regarding an international agreement was published March 8, 1994 (59 FR 10846).

and comment on decisionmaking under such system.

Because of its commitment to transparency, NHTSA has met throughout the past eighteen months with representatives of consumer interest groups and the motor vehicle industry to keep them apprised of developments in the negotiations regarding the draft Agreement. With respect to the implementation of the agreement, the agency emphasizes that it would not only keep the public advised of the key activities and make available key documents relating to the development of vehicle safety standards under the agreement, but also provide appropriate, and timely, opportunities for obtaining public input regarding the merits of these matters. The agency plans to elaborate more fully on its procedures regarding transparency and public participation in the near future.

V. Rulemaking Analyses and Notices

A. Executive Order 12866 and DOT Regulatory Policies and Procedures

NHTSA has considered the impact of this rulemaking action under Executive Order 12866 and the Department of Transportation's regulatory policies and procedures. This final rule was not reviewed by the Office of Management and Budget under E.O. 12866, ''Regulatory Planning and Review.'' This action is not ''significant'' under the Department of Transportation's regulatory policies and procedures.

This rule will not mandate compliance with any new requirements or the expenditure of any resources. NHTSA also notes that the cost of passenger cars and light trucks will not be directly affected by the rule. However, one result of adding a foreign standard to a FMVSS as an alternative compliance option or of harmonizing the FMVSS with the foreign standard could be to reduce overall manufacturing costs, and thus costs to consumers. Thus, the act of granting a petition for such a rulemaking could lead to actions that would affect the cost of new passenger cars or light trucks.

B. Regulatory Flexibility Act

NHTSA has considered the effects of this rule under the Regulatory Flexibility Act. I hereby certify that it will not have a significant economic impact on a substantial number of small entities. The rule will primarily affect manufacturers of motor vehicle and/or motor vehicle equipment, since the majority of rulemaking petitions are submitted by manufacturers. Few motor vehicle manufacturers qualify as small businesses.

The Small Business Administration's regulations define a small business, in part, as a business entity ''which operates primarily within the United States.'' (13 CFR Part 121.105(a)) SBA's size standards are organized according to Standard Industrial Classification Codes (SIC). SIC Code 3711 ''Motor Vehicles and Passenger Car Bodies'' has a small business size standard of 1,000 employees or fewer. SIC Code 3714 ''Motor Vehicle Parts and Accessories'' has a small business size standard of 750 employees or fewer.

There were approximately twelve large manufacturers and four small manufacturers producing passenger cars and light trucks in the United States. Total United States manufacturing production is approximately 15 to 15.5 million passenger cars and light trucks per year.

Petitioners who are not vehicle manufacturers will also be subject to the rule. However, NHTSA does not believe that small entities will be burdened since the rule does not require the expenditure of funds. Like any petitioner for rulemaking, a petitioner that does not or cannot generate supporting data and analyses will run the risk that the agency may not grant its petition for rulemaking. Petitioners will not, however, be subject to any regulatory requirements beyond those already required by NHTSA in the Code of Federal Regulations.

C. National Environmental Policy Act

NHTSA has analyzed this rule for the purposes of the National Environmental Policy Act and determined that it will not have any significant impact on the quality of the human environment.

D. Executive Order 12612 (Federalism)

The agency has analyzed this rule in accordance with the principles and criteria set forth in Executive Order 12612. NHTSA has determined that the amendment will not have sufficient federalism implications to warrant the preparation of a Federalism Assessment.

List of Subjects in 49 CFR Part 553

Imports, Incorporation by reference, Motor vehicle safety, Motor vehicles, Rubber and rubber products, Tires.

In consideration of the foregoing, 49 CFR Part 553 is amended as follows:

PART 553—RULEMAKING PROCEDURES

1. The authority citation for Part 553 continues to read as follows:

Authority: 49 U.S.C. 322, 1657, 30103, 30122, 30124, 30125, 30127, 30146, 30162, 32303, 32502, 32504, 32505, 32705, 32901, 32902, 33102, 33103 and 33107; delegation of authority at 49 CFR 1.50.

2. The title of the existing Appendix to Part 553 is revised to read as follows:

Appendix A To Part 553—Statement of Policy: Action on Petitions For Reconsideration

3. Part 553 is amended by adding the following new Appendix:

Appendix B To Part 553—Statement of Policy: Rulemakings Involving The Assessment of The Functional Equivalence of Safety Standards

(a) Based on a comparison of the performance of vehicles or equipment, the National Highway Traffic Safety Administration (NHTSA) may tentatively determine that a foreign motor vehicle safety standard is better than or at least functionally equivalent to a Federal Motor Vehicle Safety Standard (FMVSS), either on its own motion or in connection with a petition for rulemaking by any interested party under 49 CFR Part 552. Such determinations will be made in accordance with the process described in the flowchart in Figure 1 of this Appendix.

(b) Under the process, if NHTSA decides that there is reason to believe that a foreign standard is better than or at least functionally equivalent to a FMVSS in accordance with the process, it will commence a rulemaking proceeding that may lead to the issuance of a proposal to add the foreign standard as an alternative compliance option to the FMVSS, to harmonize the FMVSS with the foreign standard or to upgrade the FMVSS to the level of the foreign standard, as appropriate. Such a proposal will request comment on the agency's tentative determination regarding relative benefits and functional equivalence as well as the proposed amendment. Final determinations regarding these matters will also be made in accordance with the analytical criteria in the flowchart.

(c) As used in this appendix, the term ''standard'' refers to mandatory requirements and thus has the same meaning given the term ''technical regulation'' in Annex 1 to the World Trade Organization Technical Barriers to Trade Agreement.

BILLING CODE 4910–59–P

FUNCTIONAL EQUIVALENCE ASSESSMENT

PROCESS USED BY NHTSA IN COMPARING ITS VEHICLE SAFETY STANDARDS WITH THOSE OF ANOTHER COUNTRY (B) AND DETERMINING WHETHER RULEMAKING IS APPROPRIATE

FIGURE 1

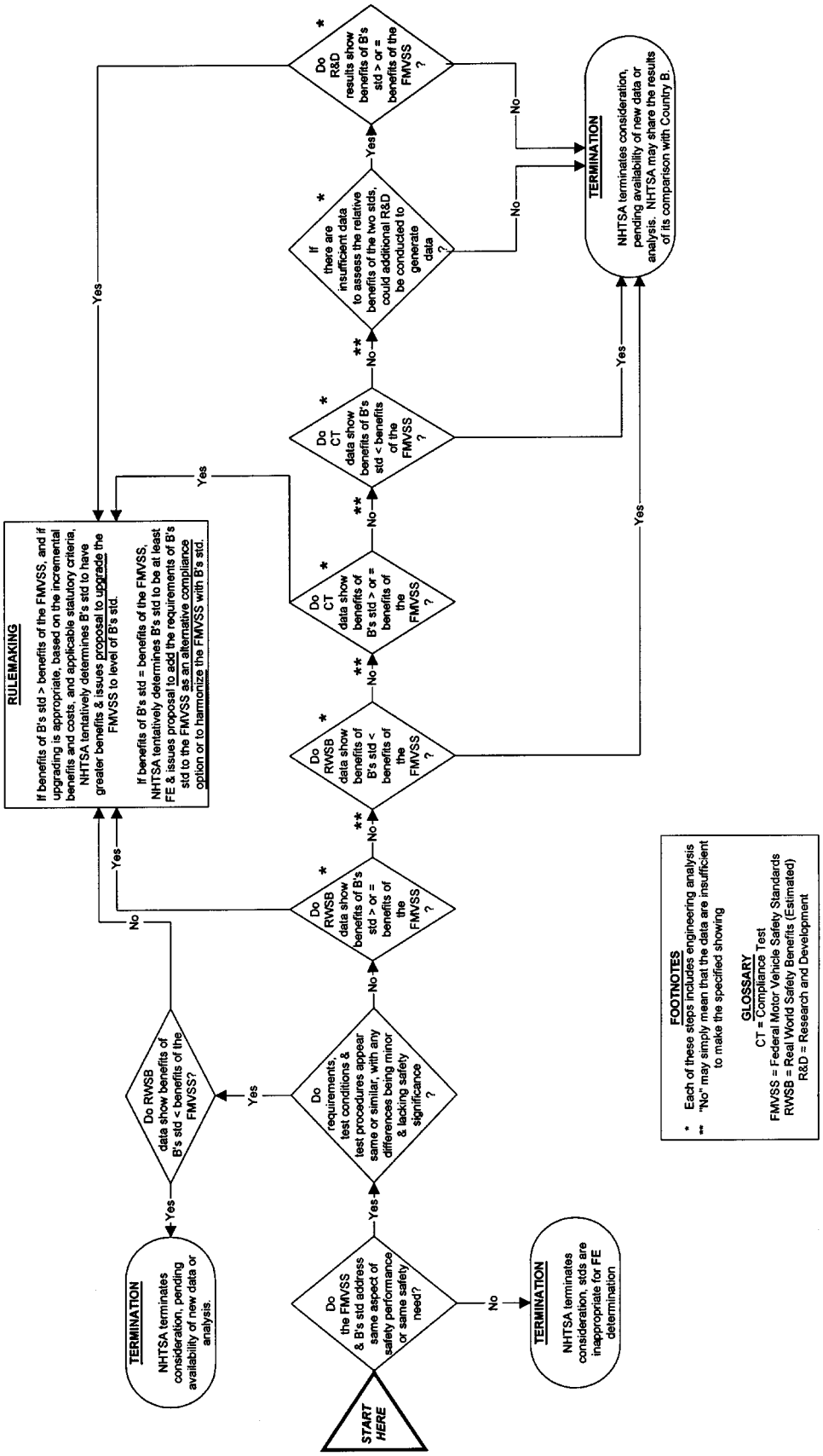

BILLING CODE 4910–59–C

EXPLANATION OF FLOWCHART

A. ULTIMATE GOAL

The ultimate goal in comparing standards is to assess the real world safety performance of the covered vehicles or equipment. Particularly in the case of crashworthiness standards, the most reliable basis for making that assessment is fatality and injury data directly drawn from actual crashes. Accordingly, NHTSA will make appropriate efforts to ensure the availability of such data regarding crashes in the U.S.

B. GUIDING PRINCIPLES

Best Practices

NHTSA pursues a ''best practices'' policy in comparing U.S. and foreign safety standards, i.e., NHTSA will propose to upgrade its standards if it tentatively concludes that a Country B standard offers greater benefits than the counterpart FMVSS, and if upgrading appears appropriate, considering the incremental costs and benefits and applicable statutory criteria. (For a discussion of another type of rulemaking proposal that may be considered in these circumstances, see the paragraph below on comparisons that indicate that a foreign standard's safety benefits are greater than those of the counterpart FMVSS.)

Conservatism

1. NHTSA places priority on preserving the safety benefits of the FMVSSs.

2. NHTSA can best preserve those benefits by being conservative in reaching any conclusion that a Country B standard is better than or at least functionally equivalent to the counterpart FMVSS. One reason for conservatism is that differences from vehicle model to vehicle model and manufacturer to manufacturer in margins of compliance may confound efforts to assess the relative benefits of two standards. Further, there may be circumstantial differences, such as special environmental conditions, driver demographics, driver behavior, occupant behavior (e.g., level of safety belt use), road conditions, size distribution of vehicle fleet (e.g., proportion of big versus small vehicles and disparity between extremes), that could influence real world safety benefits. These differences may result in a particular standard having a safety record in a foreign country that would not necessarily be repeated in the United States.

Best Available Evidence

1. NHTSA will base its comparison of standards on the best available evidence. If available, estimates of real world safety benefits based on fatality and injury data directly drawn from actual crashes are the best evidence. If such data are not available, then estimates based on other information, such as compliance test data, may be used, although increased caution needs to be exercised in making judgment based on those estimates. If sufficient crash data regarding real world safety benefits are available, and a comparison of those benefits shows that the Country B standard is less beneficial than the counterpart Federal Motor Vehicle Safety Standard (FMVSS), NHTSA would avoid wasting resources making comparisons on the basis of less probative types of evidence.

2. The types of benefits examined in comparing two standards might differ depending on whether the standards are crash avoidance standards or crashworthiness standards. Translating differences in performance (an input measure) into numbers of crashes or numbers of deaths and injuries (output measures) is more difficult in the case of crash avoidance standards. As a result, while the relative benefits of two crashworthiness standards would typically be assessed in terms of their impacts on deaths and injuries in crashes, the relative merits of two different crash avoidance standards might well be assessed in terms of their impact on vehicle or equipment performance.

Sufficiency of Evidence

1. Many types of data are available for a comparison of two standards. Often there is an abundance of one type of data and little or no data from other sources. If insufficient data are available, and such data either cannot be generated through engineering analysis (e.g., real world safety benefits estimates), or conducting additional research and development is not cost effective, then NHTSA will stop consideration of such data and consider the other available data instead.

2. The essentially horizontal, left-to-right path through the flowchart is intended to illustrate the sources of data that will be considered and provide a rough idea of the priority they will receive. Each step branches independently to the tentative determination of relative benefits and functional equivalency by its ''yes'' path. This may seem to preclude later steps once any ''yes'' path is encountered. In practice, however, all data sources will be considered to the extent that they are available before a final determination regarding these matters is made.

Reciprocity

1. NHTSA will take steps to encourage reciprocity by other countries in the making of functional equivalence determinations.

2. When NHTSA's comparison of standards indicates that one of the FMVSSs has benefits equal to or greater than the counterpart Country B standard, NHTSA may forward the results of that comparison to Country B and request that consideration be given by Country B to determining that the FMVSS is better than or at least functionally equivalent to the counterpart Country B standard, and to subsequently amending its standard accordingly.

C. AGENCY DECISIONS IN WHICH FLOWCHART IS USED

This flowchart guides agency decisions in connection with a rulemaking proceeding that involves the issue of relative benefits and functional equivalence.

1. *Decision whether to grant a rulemaking petition.* If the agency receives a petition for rulemaking based on a claim that one of Country B's standards is better than or at least functionally equivalent to one of the Federal Motor Vehicle Safety Standards (FMVSSs), the agency will consider the merits of the petition in accordance with 49 CFR Part 552, Petitions for rulemaking, defect, and noncompliance orders, and with the functional equivalence process set forth in the flowchart. If it appears that there is reason to believe that Country B's standard provides safety benefits are greater than or at least equal to those of the FMVSS, the agency will likely grant the petition and commence a rulemaking proceeding.

The agency emphasizes that its priority with respect to international harmonization is identifying and adopting those foreign safety standards that represent best practices. Accordingly, if resource limitations make it necessary to choose between competing petitions in granting or processing them, the agency would give priority to petitions asking the agency to upgrade one of its standards to the level of a superior foreign standard over petitions simply asking the agency to add a compliance alternative.

2. *Decision whether to issue a notice of proposed rulemaking.* If NHTSA grants the petition, it will proceed, as in any other rulemaking regarding the FMVSSs, to determine whether amending an FMVSS would be appropriate under the applicable statutory criteria in chapter 301 of title 49, U.S.C. Following the process set forth in the flowchart, the agency will use data submitted by the petitioner, supplemented by data from other sources, to compare performance and tentatively determine whether Country B's standard specified in the petition is better than or at least functionally equivalent to the FMVSS specified in the petition.

This comparison could have a variety of possible outcomes:

a. *The comparison may indicate that the foreign standard's safety benefits are less than those of the counterpart FMVSS.* If NHTSA determines that the foreign standard results in fewer safety benefits than the counterpart FMVSS, it will terminate the rulemaking proceeding.

b. *The comparison may indicate that the foreign standard's safety benefits are approximately equal to those of the counterpart FMVSS.* If the agency tentatively determines that the safety benefits of a foreign standard are approximately equal to those of a FMVSS, it will take one of two steps in most instances. One possibility is that it will develop a notice of proposed rulemaking (NPRM) proposing to amend the FMVSS by adding the foreign standard as an alternative to the existing requirements of the FMVSS. The other possibility is that the agency will develop an NPRM proposing to harmonize the FMVSS with the foreign standard. This second approach would enable NHTSA to maintain a single set of requirements and test procedures in its standard, thereby minimizing any drain on its enforcement resources. An additional possibility that might be considered in some instances would be ''qualified functional equivalence.'' Under this third approach, the agency would regard Country B's standard to be functionally equivalent if it is supplemented by a specified requirement in the counterpart FMVSS.

c. *The comparison may indicate that the foreign standard's safety benefits are greater than those of the counterpart FMVSS.* If NHTSA tentatively determines that the foreign standard results in greater safety benefits than the counterpart FMVSS, and if

upgrading is appropriate, based on the incremental benefits and costs and applicable statutory criteria, the agency issues an NPRM proposing to upgrade the FMVSS to the level of Country B's std. If upgrading is not appropriate, NHTSA considers issuing an NPRM proposing to add the requirements of Country B's std to the FMVSS as an alternative compliance option. The proposal to add the compliance option would set forth the basis for the agency's conclusion that upgrading the FMVSS is inappropriate. If NHTSA issues an NPRM, it would request comment on the tentative determination and the proposed amendment.

3. *Decision whether to issue a final rule.* Any final decision to make a determination regarding relative benefits and functional equivalency and to amend the FMVSS will be made in accordance with the process in the flowchart and applicable law and only after careful consideration and analysis of the public comments.

Issued on May 6, 1998.

Ricardo Martinez,

Administrator.

[FR Doc. 98–12598 Filed 5–12–98; 8:45 am]

BILLING CODE 4910–59–P

DEPARTMENT OF THE INTERIOR

Fish and Wildlife Service

50 CFR Part 17

RIN 1018–AE06

Endangered and Threatened Wildlife and Plants; Final Rule to List the Preble's Meadow Jumping Mouse as a Threatened Species

AGENCY: Fish and Wildlife Service, Interior.

ACTION: Final rule.

SUMMARY: The U.S. Fish and Wildlife Service determines the Preble's meadow jumping mouse (*Zapus hudsonius preblei*) to be a threatened species pursuant to the Endangered Species Act (Act) of 1973, as amended. The Preble's meadow jumping mouse, a small rodent in the family Zapodidae, is known to occur in seven counties in Colorado and two counties in Wyoming. Historical records document its former presence in additional counties in Colorado and Wyoming. The Preble's meadow jumping mouse lives primarily in heavily vegetated riparian habitats. Habitat loss and degradation caused by agricultural, residential, commercial, and industrial development imperil its continued existence. This action implements the protection of the Act for Preble's meadow jumping mouse.

DATES: This rule is effective June 12, 1998.

ADDRESSES: The complete file for this rule is available for public inspection, by appointment, during normal business hours at the U.S. Fish and Wildlife Service's Colorado Field Office, 755 Parfet Street, Suite 361, Lakewood, Colorado.

FOR FURTHER INFORMATION CONTACT: LeRoy W. Carlson, Field Supervisor, Colorado Field Office, U.S. Fish and Wildlife Service, P.O. Box 25486, Denver Federal Center, Denver, Colorado 80225–0207 (telephone 303/275–2370).

SUPPLEMENTARY INFORMATION:

Background

The Preble's meadow jumping mouse (*Zapus hudsonius preblei*) (Preble's) is a small rodent in the family Zapodidae and is 1 of 12 recognized subspecies of the species *Z. hudsonius*, the meadow jumping mouse (Krutzsch 1954, Whitaker 1972, Hafner 1981). The family *Zapus* consists of small to medium-sized mice with long tails and long feet adapted for jumping. Krutzsch (1954) provided a revision of the taxonomy of the genus *Zapus* in North America and recognized three living species, *Z. hudsonius, Z. trinotatus*, and *Z. princeps.* As the most recent revision of *Z. hudsonius*, this stands as the authority for taxonomy. Fitzgerald et al. (1994) described *Z. hudsonius* as greyish to yellowish-brown in color with an indistinct mid-dorsal band of darker hair and paler sides, large hindlegs and hindfeet, and a sparsely haired tail that accounts for more than 60 percent of the total length.

In his 1899 revision of North American jumping mice, E. A. Preble referred specimens of the meadow jumping mouse from Colorado and southeastern Wyoming to the subspecies *Z. h. campestris* (Preble 1899, cited by Krutzsch 1954). Krutzsch (1954) described and named *Z. h. preblei* as separate from *Z. h. campestris*, indicating as the holotype a specimen obtained by E. A. Preble in July 1895 from Loveland, Larimer County, Colorado. All records of Preble's are from southeastern Wyoming and eastern Colorado. The coloration of Preble's was described by Krutzsch (1954) as ''color dull, back from near Clay Color to near Tawny-Olive with a mixture of black hair forming poorly defined dorsal band; sides lighter than back from near Clay Color to near Cinnamon-Buff; lateral line distinct and clear Ochraceous-Buff; belly white, sometimes faint wash of clear Ochraceous-Buff; tail bicolored, brownish to light brownish-black above, grayish-white to yellowish-white below'' (capitalized color terms refer to a scientific standard, while lower case terms reflect common usage). Krutzsch (1954) also provided a technical description of the skull of Preble's, which can prove important to its identification.

There is a similarity of appearance between the Preble's meadow jumping mouse and *Z. princeps*, which also occurs in portions of Colorado and Wyoming. In general, *Z. hudsonius* may be distinguished from *Z. princeps* by average external size and cranial size (Krutzsch 1954, Whitaker 1972). Preble's may be distinguished from *Z. princeps* by a less pronounced mid-dorsal band, smaller average total length, and a skull that is small and light with a narrower braincase and smaller molars (Fitzgerald et al. 1994). Since coloration of the mid-dorsal band and total length are not definitive characteristics, skull measurements are most useful for positive identification. Ranges of the Preble's and *Z. princeps* are not known to overlap in Colorado but the relationships between respective ranges in Wyoming is less clear (Garber 1995, Armstrong 1972).

Krutzsch (1954) commented on the presence of physical habitat barriers and lack of known intergradation between the Preble's meadow jumping mouse, known only from eastern Colorado and southeastern Wyoming, and other identified subspecies of *Z. hudsonius* ranging to the east and north. Among recognized subspecies, Krutzsch found that Preble's most closely resembled *Z. campestris* from northeastern Wyoming, but summarized differences in coloration and skull characteristics. Krutzsch concluded that considerable differences existed between Preble's and related subspecies. In contrast, Jones (1981) studied specific and intraspecific relationships within *Zapus* and recognized no subspecies of *Z. hudsonius.* Jones did, however cite that *Z. hudsonius* populations in Colorado and southeastern Wyoming were apparently isolated from other populations. Hafner et al. (1981) described an additional subspecies *Z. hudsonius luteus* present in New Mexico and Arizona and differentiated it from Preble's. This subspecies was previously considered *Z. princeps luteus*, a subspecies of the western jumping mouse. Recently, *Z. h. luteus* was found in Las Animas County, Colorado (Riggs et al. 1997), the furthest north that the subspecies has been recorded, but over 100 miles south of the confirmed range of Preble's in Colorado.

Results from genetic analysis of mice from Rocky Flats Environmental Technology Site (Rocky Flats) in Jefferson County, Colorado, *Z.*

hudsonius from Minnesota and Indiana, and, *Z. princeps* from Colorado, provided clear evidence that the Rocky Flats mice were of the species *Z. hudsonius.* However, the analysis did not provide a means of separating subspecies of *Z. hudsonius* (Bruce Wunder, Colorado State University, pers. comm. 1996). Under a cost-sharing agreement with the U.S. Fish and Wildlife Service, the Colorado Division of Wildlife supported genetic studies of Preble's trapped in Colorado and Wyoming during the 1996 and 1997 field seasons. Tissue samples from presumed Preble's trapped at 23 locations in Colorado and 2 in Wyoming were assessed, through mitochondrial DNA analysis, and compared to reference samples of *Z. princeps* and to samples of *Z. hudsonius* from outside the known range of Preble's. The analysis indicated that mice from Albany County, Wyoming (Medicine Bow National Forest) to western Las Animas County, Colorado (San Isabel National Forest) formed a coherent genetic group (Riggs et al. 1997). The report concluded that ''data appear consistent with the view that a geographically contiguous set of populations previously recognized as Preble's meadow jumping mouse (*Z. h. preblei*) form a homogenous group recognizably distinct from other nearby populations and from geographically-adjacent species of the genus'' (Riggs et al. 1997). However, some specimens of *Z. hudsonius* from outside the known range of Preble's, including *Z. h. campestris* from northern Wyoming, were indistinguishable from Preble's based on the analysis. Hafner (1998) reviewed the report cited above and found no fault with the currently accepted taxonomic relationship of the subspecies *Z. h. preblei, Z. h. campestris*, and *Z. h. luteus.* He commented that current recognition of these subspecies is appropriately based on geographic variation of morphological traits and distribution.

Other conclusions of interest from the Riggs et al. (1997) genetic study included a specimen from San Isabel National Forest, Las Animas County, Colorado, which was identified as *Z. princeps* when it was collected, but was later determined to be most similar to Preble's meadow jumping mouse. The presence of Preble's in Las Animas County would significantly expand its known range southward. Reexamination of this specimen confirmed diagnostic dentation of *Z. princeps* (Cheri Jones, Denver Museum of Natural History, *in litt.* 1998). A mouse from Lone Tree Creek, Weld County, Colorado, and six mice from F.E. Warren Air Force Base, Laramie County, Wyoming, were identified as Preble's when they were trapped and later determined to be most similar to *Z. princeps* (Riggs et al. 1997). Hafner (1998) suggested that the discrepancies in species associations found in the analysis by Riggs et al. (1997) could be due to the specific DNA segment chosen for analysis, or to limited hybridization in areas where the two species' ranges overlap. Riggs et al. (1997), Hafner (1998), Tanya Shenk (Colorado Division of Wildlife, *in litt.* 1998), and David Armstrong (University of Colorado, *in litt.* 1998) encouraged additional genetic and morphological investigations to further define relationships among Zapus in the region.

The Preble's meadow jumping mouse has not been studied as extensively as other subspecies of *Z. hudsonius* have been studied elsewhere. Preble's is thought to be similar to other *Z. hudsonius* in patterns of diet, behavior, breeding, and habitat utilization. In general, *Z. hudsonius* subsists on seeds, small fruits, fungi, and insects, and hibernates from October to May (Whitaker 1972, Fitzgerald et al. 1994). It is adapted for digging, creates nests of grasses, leaves, and woody material several centimeters below the ground, and is primarily nocturnal or crepuscular, but can be observed during daylight. During the breeding season (June to mid-August), females typically have 2 to 3 litters of 5 to 6 young per litter (Quimby 1951, Fitzgerald et al. 1994). *Z. hudsonius* hibernates approximately 7 months of the year in an underground burrow that it excavates itself (Quimby 1951, Whitaker 1963).

Krutzsch (1954), Quimby (1951), and Armstrong (1972) agree that across its range, *Z. hudsonius* occurs mostly in low undergrowth consisting of grasses, forbs (herbaceous plants other than grasses), or both, in open wet meadows and riparian corridors, or where tall shrubs and low trees provide adequate cover. In addition, *Z. hudsonius* prefers lowlands with medium to high moisture over drier uplands. Whitaker (1972) concluded that *Z. hudsonius* avoids the sparse vegetation that is generally associated with low moisture habitats. Fitzgerald et al. (1994) described *Z. hudsonius* as most common in lush vegetation along watercourses or in herbaceous understories in wooded areas. Tester et al. (1993) suggested that proximity to water may be the most important factor influencing habitat selection and utilization by *Z. hudsonius.*

Some aspects of Preble's meadow jumping mouse life history, behavior, and habitat utilization have been documented. Armstrong et al. (1997) and Shenk (*in litt.* 1998) have compiled summaries of information on Preble's gleaned from recent studies. Data on the timing of the initial breeding period and time of hibernation of the Preble's meadow jumping mouse have been gathered by researchers at Rocky Flats (PTI Environmental Services 1996a). The month of May marks the beginning of the active period for Preble's, with May 5 the earliest capture date at Rocky Flats. Breeding probably occurs soon after emergence. Adults begin hibernation in early September, while juveniles enter hibernation from mid-September to late October. The latest recorded date of capture of Preble's at Rocky Flats is October 27. Adults reach approximately 20 percent body fat before going into hibernation (Wunder pers. com. 1997).

Little information exists on Preble's meadow jumping mouse food preferences. It has been speculated that Preble's may need an open water source to fulfill dietary water requirements. Armstrong et al. (1997) reported that trapping success in ephemeral drainages decreased notably in late summer after creekflow ceased.

Preble's meadow jumping mouse has been shown to move a significant distance along drainages but has not been shown to cross dry uplands to reach adjacent drainages. A male Preble's was recaptured 1.6 kilometers (km) (1 mile) (mi) upstream from a previous capture site and a female Preble's captured 1.2 km (.75 mi) downstream from a previous capture site (Thomas Ryon, PTI Environmental Services, pers. com. 1998).

At Rocky Flats, the Preble's meadow jumping mouse appears to be primarily dependent on riparian shrublands, and on mesic mixed grasslands that are adjacent to shrublands and in close proximity to streams (PTI Environmental Services 1996b). Field studies at Rocky Flats led to the conclusion that Preble's is typically found in or near complex riparian communities with multi-strata woodland and herbaceous species (Harrington et al. 1996). Capture locations were typically humid with high litter content. In a spring 1996 study at Rocky Flats, all captures were within 25 meters (m) (82 feet) (ft) of streams, with 48 percent of captures within 5 m (16 ft) of streams (PTI Environmental Services 1996a). In the same study, 90 percent of captures occurred within 5 m (16 ft) of canopy edge consisting of *Salix exigua* (coyote willow), *Symphoricarpos occidentalis* (western snowberry), *Prunus americana*

(choke cherry), and other species. Margins of artificial ponds at Rocky Flats are thought to be important foraging sites (Harrington et al. 1996).

Most successful capture sites at Rocky Flats were in dense vegetation that presented burrowing or nesting opportunities. Five nests were located in dense vegetation (Harrington et al. 1995). Based on a single underground hibernaculum, located through use of telemetry, upland habitats may be used for hibernation by Preble's (Fred Harrington, Pawnee Natural History Society, pers. comm. 1995). Robert Schorr (Colorado Natural Heritage Program, pers. com. 1997) reported four apparent hibernacula located by telemetry from 7 m (23 ft) to 31 m (101 ft) from the creek bed of Monument Creek, U.S. Air Force Academy, El Paso County, Colorado. All four hibernacula appeared to be below *Salix exigua.*

Ryon (1996) reported that four of five recent (1990 or later) Preble's meadow jumping mouse capture sites he evaluated in Colorado had five structural habitat components: trees, tall shrubs, short shrubs, herbaceous vegetation, and ground cover. The fifth site had few trees. In contrast, historical capture sites where Ryon failed to capture Preble's generally lacked one or more of these components.

Preble's was captured along Monument Creek within the U.S. Air Force Academy lands primarily in densely vegetated riparian communities where *Salix* spp., *Symphoricarpos occidentalis, Populus angustifolia* (narrow-leaf cottonwood), and thick grass understory were dominant (Corn et al. 1995). Garber (1995) characterized capture sites along Lodgepole Creek, Albany County, Wyoming as moist areas near beaver ponds with dense sedges and *Salix* sp. Ryon (1996) suggested that where Preble's occupies habitat along intermittent streams, adjacent wet meadows and seeps may be important habitats in dry periods.

Armstrong et al. (1997, p. 77) described typical Preble's meadow jumping mouse habitat as ''well-developed plains riparian vegetation with relatively undisturbed grassland and a water source in close proximity.'' Also noted was a preference for ''dense herbaceous vegetation consisting of a variety of grasses, forbs and thick shrubs.'' Meaney et al. (1997) suggested that Preble's has a broader ecological tolerance than previously thought and while they require diverse vegetation and well developed cover, this can be met in a variety of circumstances. Recent captures that were exceptions to the typical habitat described include individuals found along a small irrigation ditch and in a mesic grassy field on City of Boulder Open Space land (Clint Miller, City of Boulder, *in litt.* 1996). Ensight Technical Services (1997) reported instances of Preble's meadow jumping mouse trapped at or near sites of human alteration including ditches along roads and driveways, and wetlands adjacent to highways. Meaney et al. (1997) emphasized that vegetated ditches may be a significant habitat for Preble's and may provide dispersal routes.

Preble's meadow jumping mouse may never have been widespread in the period since western settlement. Armstrong (1972) described it as poorly known in Colorado and apparently nowhere abundant. The known historical range of Preble's may represent a relict of a more southern range of *Z. hudsonius,* occupied when the climate was cooler and more damp (Fitzgerald et al. 1994). The apparent local extirpation of Preble's from historically occupied sites in Colorado and Wyoming, and the difficulty in finding it in patches of apparently adequate but fragmented habitat isolated by human land uses, suggests a decline in populations of Preble's in recent decades.

Records for Preble's meadow jumping mouse define a range including Adams, Arapahoe, Boulder, Denver, Douglas, El Paso, Elbert, Jefferson, Larimer, and Weld Counties in Colorado; and Albany, Laramie, Platte, Goshen, and Converse Counties in Wyoming (Krutzsch 1954, Compton and Hugie 1993). Historical sites in Colorado were further discussed by Meaney and Clippinger (1995), Ryon (1996), and Ryon and Harrington (1996). Garber (1995) discussed historical sites from Wyoming and suggested that some *Zapus* from Wyoming may have been misidentified. He indicated that based on study skins alone (without skulls) positive identification was not possible. Garber concluded that two specimens from the University of Wyoming collection listed as Preble's were probably *Z. princeps,* and that several specimens listed as *Z. princeps* are believed to be Preble's.

As one might expect, given the intensity of recent surveys for Preble's meadow jumping mouse, more individuals have been trapped in the decade of the 1990's than were documented prior to 1990. Preble's is thought to currently exist in seven counties in Colorado and two in Wyoming, but it is not known to be present in three other counties in Colorado and three counties in Wyoming where it was previously documented.

Colorado

Recent (since 1992) presence of Preble's meadow jumping mouse in Colorado has been documented in seven counties along the following watercourses and their tributaries: South Boulder Creek and St. Vrain Creek (Boulder County); Coal Creek, and Ralston Creek, and Rock Creek, Walnut Creek and Woman Creek at Rocky Flats (Jefferson County); East Plum Creek, West Plum Creek, and Indian Creek (Douglas County); Monument Creek and tributaries including West Monument Creek, Smith Creek, Beaver Creek, Pine Creek, Jackson Creek, Dirty Woman Creek, and Cottonwood Creek (El Paso County); Lone Tree Creek (Weld County); Rabbit Creek and Lone Pine Creek (Larimer County); and, Running Creek (Elbert County).

A number of historical and recent records of Preble's meadow jumping mouse exist for Boulder County. A summary of past records and a report of 1995 survey results was provided by Armstrong et al. (1996). In 1995, extensive surveys were conducted, through a challenge grant cost-share agreement with the Service, to determine the presence of Preble's on City of Boulder and Boulder County Open Space lands supporting suitable habitat. Of 13 sites surveyed, Preble's were captured from 2 sites, both along South Boulder Creek (Armstrong et al. 1996). In 1996, 3 Preble's were captured on City of Boulder Open Space along South Boulder Creek, during an extensive study of grassland biodiversity entailing 6,600 trapnights (one trap set for one night equals one trapnight) of effort (Miller *in litt.* 1996). Perhaps indicative of population fluctuations, Carron Meaney (Denver Museum of Natural History, *in litt.* 1998) reported a total of 55 individual Preble's captured during 1997 studies along South Boulder Creek.

Meaney et al. (1996) reported capturing at least seven different Preble's meadow jumping mice at a Boulder County Open Space site on St. Vrain Creek, the only captures on five Boulder County sites they surveyed in 1996. A 1997 survey failed to find Preble's on a site along St. Vrain Creek near the 1996 capture site (Meaney et al. 1997). However, 1997 surveys conducted for the Colorado Department of Transportation along State Highway 36 at St. Vrain Creek, and at various wetland sites up to two miles south, resulted in captures of Preble's in six of seven locations (Ensight Technical Services 1997).

Annual studies have taken place at Rocky Flats since the discovery of the

Preble's meadow jumping mouse there in 1991 (Harrington et al. 1996). Recent populations have been reported in all four major drainages within the Rocky Flats buffer zone. During the 1995 field season, 61 Preble's were trapped at Rocky Flats, bringing the total number of individual mice trapped since 1991 to 161 (Harrington pers. comm. 1995). Estimated density of Preble's in areas trapped during 1995 studies ranged up to 36 per hectare (ha) (15 per acre (ac)). Spring 1996 trapping studies at Rocky Flats, designed to document emergence from hibernation, resulted in 29 captures of Preble's in 3,553 trapnights (PTI Environmental Service 1996a). During summer 1996 studies at Rocky Flats, 3,882 trapnights of effort resulted in capture of only 4 Preble's (PTI Environmental Service 1996b).

During 1996 and 1997 the Colorado Natural Heritage Program reviewed numerous sites on Jefferson County Open Space lands for potential presence of Preble's meadow jumping mouse and trapped at eight sites. In 1996, Preble's were captured on Jefferson County Open Space land near the mouth of Coal Creek Canyon, west of Rocky Flats (Fleming et al. 1996). In 1997, Preble's were captured at Ralston Creek (White Ranch Park, Jefferson County Open Space) (Peterson 1997).

In Douglas County, Preble's meadow jumping mice were captured from a site on East Plum Creek, near Larkspur in 1995 (Harrington 1995). Also in 1995, the Colorado Natural Heritage Program located Preble's at two sites, one on East Plum Creek and one on West Plum Creek, Douglas County. Surveys in 1996 (Meaney et al. 1996) located Preble's at an additional site on West Plum Creek south of Sedalia, and at a Colorado Division of Wildlife property on Indian Creek (a tributary to Plum Creek) south of Louviers. In 1997 the Colorado Natural Heritage Program identified, through aerial photographs, 104 sites in the Plum Creek watershed in Douglas County that appeared to have suitable Preble's habitat. Preble's were captured on 10 of 13 private land sites trapped. Use of a habitat relationships model provided an estimate of 30.6 miles of occupied streamside habitat in the watershed (Chris Pague and Parker Schuerman, The Nature Conservancy, *in litt.* 1998). Meaney et al. (1997) captured Preble's at two of three sites they trapped within the Plum Creek drainage in 1997; Willow Creek in Roxborough State Park, and a site along East Plum Creek currently being purchased by The Conservation Fund.

In El Paso County, the Colorado Natural Heritage Program discovered the Preble's meadow jumping mouse on U.S. Air Force Academy lands along Monument Creek while performing small mammal surveys in 1994. In comprehensive 1995 studies, 67 Preble's were captured (Corn et al. 1995). Using varying assumptions regarding trapping results and habitat available, total population estimates for Air Force Academy property of 308 and 449 Preble's were generated. These correspond to density estimates in occupied habitat of 2.00 per ha (0.81 per ac) and 2.92 per ha (1.18 per ac). Twenty Preble's were captured in 1996 on private land along Smith Creek, east of the Air Force Academy (Meaney et al. 1996). Trapping surveys submitted to the Service in 1997 from sites of proposed construction documented Preble's within the Monument Creek drainage off of Air Force Academy property at Monument Creek, Pine Creek, Black Squirrel Creek, Cottonwood Creek, and Dirty Woman Creek. Meaney et al. (1997) located Preble's within the Monument Creek drainage on Beaver Creek.

Meaney et al. (1997) reported an improved ability to recognize suitable habitat and, by targeting mostly small drainages with dense vegetation, captured Preble's meadow jumping mouse at 7 of 10 sites trapped, including sites in 3 counties not known to have extant populations. Preble's were captured at Rabbit Creek and Lone Pine Creek, within Cherokee Park State Wildlife Management Area, Larimer County. A single apparent Preble's was captured on private land along Lone Tree Creek, Weld County (see discussion of genetic studies by Riggs et al. 1997). In Elbert County, a single Preble's was found at Hay Gulch, a tributary of Running Creek. Among sites recommended for future surveys were the confluence of Lone Tree Creek and the South Platte River (Weld County), and Bijou Creek, Kiowa Creek, and Running Creek (Elbert County) (Meaney et al. 1997).

Wyoming

In Wyoming, Preble's meadow jumping mouse has been recently documented in two counties, along Crow Creek at F.E. Warren Air Force Base (Laramie County) and in the Lodgepole Creek drainage, within the Medicine Bow National Forest (Albany County). The Wyoming Cooperative Research Unit successfully captured two Preble's on F.E. Warren Air Force Base, Laramie County, in the 1995 field season (Garber 1995). Garber conducted Preble's surveys at four Wyoming sites during the 1995 field season. He was unable to locate any Preble's on F.E. Warren Air Force Base, but did find Preble's at two locations in the Lodgepole Creek drainage within the Medicine Bow National Forest in Albany County. The Colorado Natural Heritage Program surveyed for Preble's at Warren Air Force Base in 1996 and captured 8 apparent Preble's (see discussion of genetic studies by Riggs et al. 1997) in 2,200 trapnights of effort (Schuerman and Pague 1997).

Previous Federal Action

The Service included the Preble's meadow jumping mouse as a category 2 candidate species in the 1985 Animal Notice of Review (50 FR 37958) and retained that status in subsequent notices, published in the **Federal Register** on January 6, 1989 (54 FR 554), November 21, 1991 (56 FR 58810), and November 15, 1994 (59 FR 58982). In 1996 the Service discontinued the practice of maintaining a list of category 2 species and the Preble's did not appear in the February 28, 1996 (61 FR 7596), Notice of Review. Category 2 species were those species for which information in the Service's possession indicated that listing was possibly appropriate, but for which substantive data on biological vulnerability and threats were not available to support a proposed rule. Candidate species are currently defined as those species for which the Service has sufficient information on file detailing biological vulnerability and threats to support issuance of a proposed rule, but issuance of the proposed rule is precluded by other listing actions.

On August 16, 1994, the Service received a petition from the Biodiversity Legal Foundation to list the Preble's meadow jumping mouse as endangered or threatened throughout its range and to designate critical habitat within a reasonable amount of time following the listing. The petitioner submitted information that Preble's populations in Colorado and Wyoming are imperiled by: ongoing and increasing urban, industrial, agricultural, ranching, and recreational development; ongoing and increasing wetland/riparian habitat destruction and/or modification; small size of known populations; and inadequacy or lack of governmental protection for the species and its habitats.

On March 15, 1995 (60 FR 13950), the Service published notice of the 90-day finding that the petition presented substantial information indicating that listing the Preble's meadow jumping mouse may be warranted, and requested comments and biological data on the status of the mouse. On March 25, 1997, the Service issued a 12 month finding on the petitioned action along with a

proposed rule to list Preble's as an endangered species and announced a 90-day public comment period (62 FR 14093). On May 5, 1997, the Service announced three public hearings regarding the proposed rule and extended the comment period through July 28, 1997 (62 FR 24387). The Service reopened the public comment period on December 23, 1997, for a period of 30 days, through January 22, 1998 (62 FR 67041).

Summary of Comments and Recommendations

In the March 25, 1997, proposed rule and associated notifications, and in subsequent notices to extend or reopen the public comment period, all interested parties were requested to submit factual reports or information that might contribute to the development of a final rule. The public comment period was extended through July 28, 1997 (62 FR 24387) and reopened from December 23, 1997, through January 22, 1998 (62 FR 67041). Various Federal and State agencies, county governments, scientific organizations, and other interested parties were contacted and requested to comment. Newspaper notices were published in the Rocky Mountain News (Denver, CO), the Colorado Springs Gazette-Telegraph (CO), the Boulder Daily Camera (CO), the Casper Star Tribune (WY), and the Wyoming Eagle Tribune (Cheyenne, WY), which invited general public comment and attendance at public hearings.

Public hearings were initiated by the Service and held May 19, 1997, in Cheyenne, Wyoming; May 21, 1997, in Colorado Springs, Colorado; and May 22, 1997, in Denver, Colorado. Each hearing began with opening comments by the Service followed by an opportunity for public comments. In Cheyenne, 8 people attended and 1 commented; in Colorado Springs 28 attended and 8 commented; and in Denver 27 attended and 4 commented.

One hundred and thirty-eight written comments were received. Significant issues are discussed below. Several individuals or groups submitted comments in both the original and the reopened comment periods, or during hearings and later in writing. Senator Craig Thomas of Wyoming opposed the proposal. Two Federal agencies commented and opposed the proposal; the Department of Energy's Rocky Flats Field Office supported a 6-month extension of the proposed rule. The Department of Energy's Western Area Power Administration supported a threatened listing. Six State agencies commented, four from Wyoming and two from Colorado. From Wyoming, three State agencies opposed the proposal (two of the three supported an extension) and one Wyoming agency neither supported nor opposed the proposed rule. From Colorado, one agency opposed the proposal and supported an extension and one neither supported nor opposed the proposed rule. Of 128 comments by individuals or other groups, 29 supported the proposed rule, 74 opposed it, and 25 were neutral. Five stockgrowers or farm organizations provided comments opposing the proposal. Five of six conservation or environmental groups supported the proposal and one was neutral.

Written comments and oral statements presented at the public hearings and received during the comment periods are addressed in the following summary. Comments of similar nature are grouped under a number of general issues.

Issue 1: The Preble's meadow jumping mouse is not a valid subspecies since genetic studies conducted to date have not conclusively differentiated it from certain other subspecies of *Z. hudsonius*.

Response: Preble's is widely recognized as a valid subspecies by the scientific community. Genetic studies point to an aggregate of similar *Z. hudsonius* populations consistent with ecological, distributional, and morphological information on Preble's (*Z. h. preblei*).

Issue 2: Preble's meadow jumping mouse identification in the field is not possible because of the similarity between Preble's and *Z. princeps*.

Response: Field identification of *Zapus* is difficult when attempted by individuals not thoroughly familiar with both species. To date, no overlap has been documented between the range of Preble's and the range of *Z. princeps* in Boulder, Jefferson, Douglas, and El Paso Counties in Colorado. These counties support the vast majority of currently known Preble's populations. Since the two species may coexist in portions of southeastern Wyoming, some historical records from Wyoming are difficult to confirm. Recent genetic studies may indicate some uncertainty regarding the identity of apparent Preble's trapped in Weld County, Colorado and Laramie County, Wyoming. However, populations of *Zapus* that are consistent morphologically and ecologically with Preble's, will be considered Preble's by the Service pending conclusive studies resolving the identities of the two species. Identification of any *Zapus* captured in Weld County, Colorado (as well as in adjacent Larimer County, Colorado) and in southeastern Wyoming should be throughly documented and tissue samples should be obtained for future genetic analysis.

Issue 3: Historical trapping records support the contention that Preble's meadow jumping mouse has long been a rare mammal and they provide a poor baseline from which to measure current trends in populations.

Response: Conclusions regarding the status and trends of Preble's made by the Service are based on the best available historical and recent population information on Preble's, the distribution of its preferred habitats, and on the significant threats to these habitats. While historical records come from diverse trapping efforts that rarely targeted *Zapus*, they document a former presence in locations where Preble's is not currently found. Recent surveys of several historical sites have failed to locate Preble's. Loss of these populations has been attributed to changes in habitat.

Issue 4: Comprehensive trapping surveys throughout Preble's meadow jumping mouse range are needed to ascertain its true status and distribution.

Response: Existing data are sufficient to determine the overall status of Preble's. Additional trapping studies will be conducted to better document Preble's status within certain portions of its range. Since 1992, numerous studies have addressed the status and distribution of Preble's. Trapping studies supported by the Colorado Division of Wildlife in 1995, 1996, and 1997 helped to document distribution of Preble's in Colorado. In 1997 alone, more than 120 locations in Colorado were trapped, with a minimum of 400 trapnights of effort at each location. Limited access to private lands has hampered survey efforts at some locations and will probably continue to do so in the future.

Issue 5: Since Preble's exists on some sites where grazing, mowing, and other human land uses occur, these activities should not be considered threats.

Response: Land uses that have a dramatic adverse impact on habitats that the Preble's meadow jumping mouse requires can present significant threats to its existence. The relationships between human land use and Preble's populations are undoubtedly complex and need further study. The manner, timing, and extent of grazing or mowing may dictate what effects these activities have on Preble's and its habitat. However, Preble's do coexist in grazed areas such as the Medicine Bow National Forest in Wyoming and Boulder Open Space lands in Colorado, and some ranching and farming practices are thought likely to be

compatible with maintaining Preble's populations. The Service believes that best management ranching and farming practices, which avoid adverse affects on habitat characteristics, are compatible with many natural resource objectives.

Issue 6: Water projects and irrigation may be beneficial to the Preble's meadow jumping mouse, since these activities can create wetland habitat.

Response: Preble's seems largely dependent on moist habitat with dense vegetation in or near riparian corridors. Effects of water projects on Preble's and its habitat can vary greatly. Water projects can effectively eliminate, degrade, or fragment Preble's habitat. However, activities that enhance and extend such habitat can benefit Preble's.

Issue 7: Trapping studies are a significant threat to Preble's meadow jumping mouse.

Response: The scientific value of trapping studies will be measured against the threats such studies represent to Preble's. The Service will issue permits to qualified individuals conducting approved trapping studies on Preble's. While ''live traps'' are being used, the Service is aware of a few mortalities associated with recent trapping. Trapping techniques that best safeguard Preble's will be required by the Service.

Issue 8: Predators may be a threat to the Preble's meadow jumping mouse and should be controlled.

Response: While Preble's has co-existed with a community of predators over time, little is known regarding the effect of predators or competing species on Preble's populations. Human activities have undoubtably altered predator populations. Human development may, for example, increase numbers of great-horned owls and raccoons. However, there is presently insufficient evidence to demonstrate that control of predators would benefit Preble's.

Issue 9: Captive breeding and release, and relocation of the Preble's meadow jumping mouse should be used to stabilize populations and eliminate the need for listing.

Response: Scarcity of suitable habitat presumably limits current Preble's distribution. Maintenance of quality habitat is the principal conservation goal. Relocation and reintroduction of Preble's into unoccupied sites with suitable habitat may become a part of the future recovery of this species.

Issue 10: If the Preble's meadow jumping mouse were protected on Federal land there would be no need to protect it on private land.

Response: The Service is working with the U.S. Air Force, the Department of Energy, and the Forest Service to assure that conservation of Preble's is carried out on all Federal lands on which it currently exists. While both the Air Force Academy and Rocky Flats support apparently stable populations of Preble's, these sites compose a small fraction of the total Preble's range. Protection of these sites alone would not alleviate the need for listing of Preble's or achieve recovery.

Issue 11: Local regulations exist that currently protect the Preble's meadow jumping mouse and its habitat.

Response: The Service has received from the Colorado Department of Natural Resources a summary of local regulations, incentive programs, Colorado Water Conservation Board instream flow decrees, and open space purchase programs that help protect habitats that support Preble's. A variety of regulations apply to activities in riparian areas and, in effect, contribute to conservation of Preble's. However, few local ordinances currently provide direct protection of Preble's or its habitat. Natural areas and wildlife habitat may be considered in zoning or development review, but most ordinances will permit significant variance and provide for considerable latitude in interpretation. For example, construction within the 100-year floodplain may be tightly restricted by such measures, but the mowing, cutting, or overgrazing of Preble's habitat is generally not addressed. The City of Boulder wetlands protection ordinance has a specific provision designed to protect rare and declining species including Preble's. Fort Collins provides protection for ''endangered species habitat'' in development review, but apparently does not address rare, declining, or threatened species. Incentives and purchase programs contribute to riparian conservation but afford no direct legal protection for Preble's. While often beneficial to Preble's, public acquisition of riparian areas may, at times, result in increased human use incompatible with Preble's.

The Service supports use of local land use regulations to conserve Preble's and its habitat; however, the best measure of their past effectiveness in protecting Preble's is the success of these regulations in maintaining the integrity of riparian systems within Preble's range. Direct and secondary effects of human activity continue to cause alteration of riparian areas despite these protections. The Service is currently engaged in discussions with the Colorado Department of Natural Resources and the Colorado Preble's Meadow Jumping Mouse Working Group to determine how local regulations and acquisition programs can be used more effectively to protect Preble's and its habitat.

Issue 12: The Service should designate critical habitat for Preble's meadow jumping mouse.

Response: The Service has determined that designation of critical habitat will not provide additional benefits beyond that achieved by the listing of Preble's at this time (see the Critical Habitat section of this rule). The Service could reevaluate designation of critical habitat at some future time should circumstances change and more becomes known about Preble's, its habitat, and potential benefit to the species to be gained from designation of critical habitat.

Issue 13: The Service should extend the proposed rule for a period of 6 months.

Response: The Service can only extend a proposed rule when it finds that there is a substantial disagreement among scientists knowledgeable about the species regarding the sufficiency or accuracy of the data available relevant to the listing. The Service finds no substantial disagreement among scientists knowledgeable about Preble's that would serve as a basis for extension of the proposed rule.

Issue 14: The collaborative planning process for Preble's meadow jumping mouse conservation, initiated by the State of Colorado, should be pursued as an alternative to listing.

Response: Consistent with the spirit and intent of the 1995 ''Memorandum of Agreement between the State of Colorado and the Department of Interior Concerning Programs to Manage Colorado's Declining Native Species,'' the Service fully supports the collaborative planning process for Preble's conservation that is under way in Colorado. The intent of the Memorandum of Agreement is to facilitate and promote collaboration and cooperation in managing and conserving fish and wildlife in Colorado. It was not intended to serve as an alternative to listing threatened or endangered species as required by the Endangered Species Act. The collaborative planning process includes stakeholders from local governments, the private sector, the State, and Federal agencies. This final rule to list Preble's as a threatened species is not intended to discourage or detract from this conservation effort; however, the Service recognizes that it will take time and commitment on the part of numerous stakeholders for this process to achieve meaningful protection of Preble's. The Service

believes that, ultimately, this process will produce a conservation plan and implementation agreements that both protect Preble's and its habitat over the long term and will minimize regulatory and economic effects of this listing. These products may form the basis of one or more Habitat Conservation Plans or a rule prepared in accordance with section 4(d) of the Endangered Species Act. To this end, the Service is providing financial support to help move this process forward.

Issue 15: Rodents are destructive and carry disease. Listing the Preble's meadow jumping mouse may impact pest control and lead to disease or increased crop losses.

Response: Preble's has not been implicated as a vector for human disease. Its rarity and dependence on riparian and wetland areas minimize its potential as a pest. Pest control efforts within and around residences and other buildings, and in crop fields when carried out in accordance with pesticide label restrictions, are unlikely to conflict with Preble's conservation. However, in some cases the application or discharge of agrichemicals, or other pollutants, and pesticides, onto plants, soil, ground water, or other surfaces within areas that drain into streams occupied by Preble's may result in the deterioration of Preble's habitat and cause harm to the species. Use of such chemicals in violation of label directions, or any use following Service notification that such use, application or discharge is likely to harm the species, would be evidence of unauthorized use, application or discharge.

Peer Review

In accordance with policy promulgated July 1, 1994 (59 FR 34270), the Service solicited the expert opinions of independent specialists regarding pertinent scientific or commercial data and assumptions relating to the taxonomy, population models, and supportive biological and ecological information for species under consideration for listing. The purpose of such review is to ensure listing decisions are based on scientifically sound data, assumptions, and analyses, including input of appropriate experts and specialists.

The data and assumptions regarding the Preble's meadow jumping mouse were reviewed by three specialists. Peer reviewers were identified through inquiries to research institutions, universities, and museums for individuals with recognized expertise with the subject taxa. The reviewers were asked to comment upon specific assumptions and conclusions regarding the species. Their comments have been incorporated into the final rule as appropriate and are summarized below.

One reviewer provided a context for species status over time scales reflecting long-term climate change and effects of European settlement within Preble's meadow jumping mouse range. The same reviewer (citing a relative lack of species-specific trapping efforts prior to the 1990's and geographical gaps in recent survey efforts) stated that while conclusions regarding recent Preble's decline might be accurate, they were not strongly supported by capture data. The reviewer suggested that examination of the adverse changes to the riparian habitats required by Preble's could provide additional insight to population status and trends.

The reviewers of the Preble's meadow jumping mouse information concluded that additional study of habitat requirements and population biology are needed to implement effective conservation of Preble's. Specifically, the limited knowledge of hibernation habitat requirements was cited by two reviewers. A better understanding of Preble's movement patterns was cited by two reviewers as important. One reviewer emphasized that more information on Preble's food habitats is needed.

All three reviewers discussed threats to the Preble's meadow jumping mouse. One reviewer suggested that known populations at the Air Force Academy and Rocky Flats reflect the long-term protection of these sites from human disturbance rather than presence of optimal Preble's habitat. Another reviewer concluded that currently only two or three sites supporting Preble's are adequately protected. Threats discussed by reviewers included fragmentation of riparian corridors, gravel mining, and alteration of water regimes and the resulting effects on riparian vegetation.

Summary of Factors Affecting the Species

Section 4 of the Act and regulations (50 CFR Part 424) promulgated to implement the listing provisions of the Act set forth the procedures for adding species to the Federal lists. A species may be determined to be a threatened or endangered species due to one or more of the five factors described in section 4(a)(1). These factors and their application to the Preble's meadow jumping mouse (*Zapus hudsonius preblei*) are as follows:

A. *The present or threatened destruction, modification, or curtailment of its habitat or range.* After reviewing the best scientific data currently available, the Service believes that Preble's meadow jumping mouse has undergone a decline in range and that populations within its remaining range have been lost. Habitat loss and fragmentation resulting from human land uses have adversely impacted Preble's populations, and continue to do so. Armstrong (*in litt.* 1997) concluded that the meadow jumping mouse, in this region as elsewhere, is a habitat specialist, and that its specialized habitat is declining. As the summary below demonstrates, a variety of known and potential threats to its habitat have been documented.

The Colorado Natural Heritage Program ranks Preble's meadow jumping mouse as T2, imperiled globally, and S2, imperiled in Colorado; the Wyoming Natural Diversity database ranks Preble's as S1, critically imperiled in Wyoming (Schuerman and Pague 1997).

A study by Compton and Hugie (1993), which was funded by the Service, found it difficult to assess historical trends and current status of Preble's meadow jumping mouse due to the scarcity of demographic data. Based on their review, they recommended that Preble's be federally listed as a threatened species. However, after a largely unsuccessful search for suitable habitat in Wyoming and unsuccessful trapping surveys for Preble's at five sites in southeastern Wyoming in 1993, they concluded that Preble's might be extirpated from Wyoming (Compton and Hugie 1994). Their revised recommendation was that Preble's be federally listed as an endangered species.

Since 1993, efforts to document existing populations of Preble's meadow jumping mouse have increased commensurate with rising concern over its status. Recent trapping efforts have located Preble's meadow jumping mouse populations in some areas (Douglas, El Paso, and Elbert counties, Colorado) where few or no historical records exist. However, recent trapping has also failed to produce captures at historical sites and sites with apparently suitable habitat within Preble's historical range. Preble's is not known to be currently present in Adams, Arapahoe, and Denver counties in Colorado where it was historically documented.

Ryon (1996, *in litt.* 1997) investigated nine historical Preble's meadow jumping mouse capture sites in six Colorado counties through trapping and site history. Ryon concluded that Preble's was absent at all nine sites and related absence of Preble's to changes in habitat (see also Ryon and Harrington

1996). Specific human activities impacting habitat at these sites included real estate development, highway construction, stream alteration, and grazing. In addition, offsite impacts may have caused isolation of sites that rendered them unsuitable for Preble's. Ryon concluded that the range of Preble's has decreased, especially adjacent to or east of the Interstate Highway 25 urban corridor.

Extensive studies of public lands in Boulder County in 1995 resulted in capture of 23 Preble's, on 2 of 13 sites surveyed, in 17,800 trapnights of effort (Armstrong et al. 1996). Sites were selected, in part, based on documented historical presence and perceived quality of habitat. Among the authors' conclusions were that Preble's is not abundant in the Colorado Piedmont of Boulder County and that suitable habitat appeared to be present on some sites where trapping was unsuccessful.

Recent surveys for Preble's meadow jumping mouse at certain other sites with potential habitat in Colorado have been unsuccessful in documenting presence. Surveys funded and carried out by the Department of the Army at the Army's Fort Carson Military Reservation in El Paso and Pueblo counties resulted in no Preble's captures despite 3,311 trapnights of effort in apparently suitable habitat (Bunn et al. 1995). Private researchers and U.S. Department of Agriculture Forest Service personnel found no Preble's in limited surveys of seemingly adequate habitats within the Forest Service's Pawnee National Grassland in northern Weld County (Harrington pers. comm. 1995).

Patterns of capture suggest that populations may fluctuate over time at occupied sites (Shenk *in litt.* 1998). This raises questions regarding security of documented populations and significance of unsuccessful trapping reports. However, trapping surveys provide the best available information regarding current status and distribution of Preble's.

Over 150 surveys for Preble's meadow jumping mouse have been conducted in recent years at locations where development is anticipated. In 1997, results of 104 Colorado surveys were submitted to the Service for proposed or potential development sites that supported potential Preble's habitat. Nine of 35 surveys in El Paso County, 7 of 19 in Boulder County, and 1 of 17 from Jefferson County documented Preble's presence. All successful surveys in El Paso County were on Monument Creek and its tributaries upstream from (north of) downtown Colorado Springs. In contrast, approximately 15 trapping studies from El Paso County downstream of the Cottonwood Creek and Monument Creek confluence (on Monument Creek, Fountain Creek, and their tributaries) failed to document Preble's. Six of 7 successful Boulder County surveys were near a 2-mile segment of State Highway 36 near Lyons (Ensight Technical Services 1997). Thirty-three 1997 surveys from Adams, Arapahoe, Denver, Douglas, Larimer, and Weld counties failed to locate Preble's. Fragmentation and isolation of habitat have apparently caused local extirpation of Preble's in highly developed areas. Shenk (*in litt.* 1998) suggested that development of the Denver metropolitan area has created a north-south gap in Preble's range.

In contrast to surveys above at anticipated development sites, Meaney et al. (1997) targeted likely Preble's meadow jumping mouse habitat throughout its known range and successfully trapped Preble's at 7 of 10 sites in 1997. Their results filled gaps regarding Preble's status in north-central Colorado and suggest that their ability to identify Preble's habitat has improved over their 1995 and 1996 efforts which found Preble's at 0 of 10 and 4 of 10 sites respectively.

While historical status in Wyoming is less clear (Garber 1995), Preble's meadow jumping mouse is not currently known from its former range in Albany, Goshen, and Natrona counties. Garber documented Preble's persisting at only two Wyoming sites, commented on the difficulty of capturing Preble's at these sites, and concluded that substantial additional work was needed to fully determine the status of Preble's in Wyoming. The Wyoming Game and Fish Department (Bill Wichers *in litt.* 1997) concurred with the conclusion that Preble's has likely been extirpated from most or all of its historical range in Wyoming.

Trapping surveys provide evidence that the Preble's meadow jumping mouse has declined throughout portions of its range. This decline and future threats to existing Preble's populations are linked to widespread habitat alteration. The Colorado Piedmont east of the Front Range and adjacent areas of southeastern Wyoming have changed from predominantly prairie habitat intermixed with perennial and intermittent streams and associated riparian habitats, to a more agricultural and urban setting with grazing, residential, commercial, industrial, and recreational development. The Colorado Front Range urban corridor represents only about 4 percent of the State's land area but supports 80 percent of its population (Wright 1993). Unfortunately, this area of development corresponds almost directly to known Preble's range. Fueled by human population increases, an increase of 1 million people is estimated by 2020, development in this area continues at an unprecedented rate.

Compton and Hugie (1993, 1994) cited human activities that have adversely impacted Preble's meadow jumping mouse including: conversion of grasslands to farms; livestock grazing; water development and management practices; and residential and commercial development. They mentioned the effects of urbanization occurring from Colorado Springs, Colorado, to Cheyenne, Wyoming, as a continuing threat to remaining populations. Ryon (1995) commented that recent capture sites he observed were on large, historically undisturbed lands supporting native plant communities.

Shenk (*in litt.* 1998) linked potential threats to ecological requirements of Preble's meadow jumping mouse and suggested that factors which impacted vegetation composition and structure, riparian hydrology, habitat structure, distribution, geomorphology, and animal community composition must be addressed in any conservation strategy.

Some researchers hypothesize that overgrazing by livestock may be an important cause of the decline of the Preble's meadow jumping mouse. Compton and Hugie (1994) stated that in southeastern Wyoming almost all private land of appropriate topography and hydrology to support Preble's habitat was heavily grazed by livestock and that overgrazing was the most significant factor in reducing habitat for Preble's. While not mentioning grazing specifically, the Wyoming Game and Fish Commission (Wichers *in litt.* 1997) cited riparian degradation as the primary cause of Preble's decline in Wyoming and stated that the situation would not improve without active management. Ryon (1996) cited livestock grazing as a contributor to lack of structural habitat diversity he observed on historical Preble's sites in Colorado. Two of the largest documented populations of Preble's exist on Federal properties (Rocky Flats and the U.S. Air Force Academy) where livestock grazing is excluded.

The importance of ''late season obesity'' (the buildup of fat reserves) in meadow jumping mice and its positive correlation to hibernation survival, post-hibernation development, and successful reproduction has been well documented (Nichols and Conley 1982, Muchlinski 1980). Preble's meadow jumping mice entering hibernation with

low fat reserves are less likely to survive the winter or to successfully breed the following spring. Late season grazing of Preble's habitat, as well as mowing or burning, could adversely affect Preble's by reducing the availability of food resources essential for buildup of fat reserves.

City of Boulder Open Space lands endured intensive grazing, farming, or haying regimes until they became part of the City of Boulder Open Space system. Grazing and haying continue on sites supporting the Preble's meadow jumping mouse, largely as land management tools. Impacts of current management practices to Preble's and their habitats are largely unknown.

The Preble's meadow jumping mouse has been documented to coexist on sites supporting grazing, including the Medicine Bow National Forest in Wyoming and Plum Creek, Douglas County, in Colorado. Armstrong et al. (1997) suggested that timing and intensity of grazing are probably important factors in maintaining Preble's habitat and that maintenance of woody vegetative cover may be a key consideration.

Human development has produced profound changes in the hydrology of streams flowing east from the Colorado Front Range. Riparian habitat on which the Preble's meadow jumping mouse depends is in turn dependent on surface flows and groundwater. Water development and management in its various forms can alter Preble's meadow jumping mouse habitat, often, but not always, with adverse impacts. Fitzgerald et al. (1994) stated that inundation of riparian areas to create reservoirs had decreased available Preble's habitat. Compton and Hugie (1993) concluded that management of water for commercial and residential use tends to channelize and isolate water resources, and has reduced in size and fragmented riparian habitats used by Preble's. They found development of irrigated farmland had a negative impact on Preble's habitat, and that any habitat creation it produced was minimal. However, Preble's has been shown to use overgrown water conveyance ditches and pond edges and may use ditches for dispersal (Meaney et al. 1997, Shenk *in litt.* 1998).

Water diversions and associated land use changes can impact Preble's meadow jumping mouse habitat directly, as well as through hydrologic alterations to Preble's habitat located downstream. While an integrated natural resource management plan at the Air Force Academy includes specific provisions for Preble's conservation, Corn et al. (1995) expressed concern over the hydrologic integrity of Monument Creek and its tributaries because of activities upstream of the Air Force Academy. Flood control, through the placement of riprap and other structural stabilization options, has been proposed on areas that support Preble's, including portions of Monument Creek and its tributaries.

While Rocky Flats supports one of the largest known populations of Preble's meadow jumping mouse and has served as a refuge for Preble's, the future conservation of Preble's at this site is uncertain due to possible impacts to occupied habitats. Without careful planning, Preble's meadow jumping mouse habitats at Rocky Flats could be impacted by the Department of Energy's planned bioremediation (the detoxification of toxic substances using biological agents) and hazardous contaminant cleanup, associated water management practices designed to contain hazardous materials spills and prevent their migration offsite, and dam safety and maintenance activities. An additional threat is potential disruption of the current hydrology by mining operations. There are proposals to expand existing commercial sand and gravel extraction and processing activities in the Rock Creek drainage both outside and within the boundary of Rocky Flats. The Department of Energy does not control mineral rights on the land in question. The Service is currently working with the Department of Energy to provide permanent protection of Preble's habitat at Rocky Flats.

Alluvial aggregate extraction, often in or near riparian habitats, continues to expand as development intensifies along the Colorado Front Range. Ryon (1996) and Armstrong et al. (1997) suggested that such mining can destroy and fragment Preble's meadow jumping mouse habitat. Armstrong (*in litt.* 1997) suggested that mining impacts are significant and, unlike some other human uses, cause permanent changes to Preble's habitat. Mining also targets gravel deposits that may provide key hibernation sites.

Residential and commercial development, accompanied by highway and bridge construction, and instream alterations to implement flood control, directly remove Preble's meadow jumping mouse habitat, or reduces, alters, fragments, and isolates habitat to the point where Preble's meadow jumping mouse can no longer persist. Corn et al. (1995) proposed that a 100 m (328 ft) buffer of unaltered habitat be established to protect the floodplain of Monument Creek from a range of human activities that might adversely effect Preble's or its habitat. At some historical capture sites, habitat appears intact, but isolation has probably rendered the sites unsuitable for Preble's (Ryon 1996). Roads, trails, or other linear development through Preble's habitat may act as barriers to movement. Shenk (1998) suggested that on a landscape scale, maintenance of acceptable dispersal corridors linking patches of Preble's habitat may be critical to its conservation.

Development and heavy use of trails within occupied Preble's meadow jumping mouse habitats may impact the species by destroying its habitat, nests, and food resources, or by disrupting behavior. Recreational trail systems have been established or are proposed along many riparian corridors within Preble's range. Heavily used recreational trails currently exist on City of Boulder Open Space lands, including sites that support Preble's. A current study near a new paved trail along South Boulder Creek is assessing impacts to a known Preble's population (Meaney *in litt.* 1998).

Habitat alteration may encourage invasion of weeds. While little is known regarding impact of invasive, nonnative vegetation on Preble's meadow jumping mouse, Ryon (1996) expressed concern and Garber (1995) stated that this may represent one of the most serious problems facing the mouse. Corn et al. (1995) discussed both the problem of invasive weeds degrading Preble's habitat and the potential problem of weed control programs removing cover and thereby impacting Preble's habitat.

In summary after reviewing the best scientific data currently available, the Service finds that Preble's meadow jumping mouse has undergone a decline in range and that populations within its remaining range have been lost. Habitat alteration, degradation, loss, and fragmentation resulting from residential, commercial, recreational, flood control and water development, and agricultural and livestock grazing land uses have adversely impacted and fragmented Preble's populations. Significant threats to the continued existence of Preble's are also posed by hazardous materials, mining, and highway and bridge construction. This species is also highly susceptible to localized extinction from naturally occurring events such as flooding, predation, and disease outbreaks.

B. *Overutilization for commercial, recreational, scientific, or educational purposes.* The Preble's meadow jumping mouse has no known commercial or recreational value. Scientific and educational collecting has not been widespread over the past century. While

the Service is aware of a small amount of incidental mortality associated with recent scientific studies, this is not thought to present a threat to Preble's populations.

C. *Disease or predation.* The Preble's meadow jumping mouse, as well as other native rodents, carries parasites and diseases that may reduce vigor, curtail reproductive success, and cause death. There is no evidence whether or not any epizootic disease has caused significant impact to Preble's. While plague is regularly found in other rodent species within Preble's range, its impact to Preble's populations is not known.

Predation on the Preble's meadow jumping mouse has always existed as a naturally occurring association between predator and prey. While evidence is scant, human development may have altered this relationship. Armstrong et al. (1996) recommended studies be conducted on influences of the suburban environment and associated densities of species such as striped skunk (*Mephitis mephitis*), raccoon (*Procyon lotor*), and the domestic cat (*Felis catus*) on Preble's. Free-ranging domestic cats may locally present a problem to Preble's. Corn et al. (1995) recommended a 1.5 km (.9 mi) setback of housing development from Preble's habitat to exclude predation by ''house cats.'' As an alternative they suggested a strict prohibition on free-ranging cats. More information is needed about the effects from predation by domestic and feral cats, and perhaps dogs (*Canis familiaris*), on Preble's.

D. *The inadequacy of existing regulatory mechanisms.* The decline of the Preble's meadow jumping mouse is partially due to the inherent weakness or non-application of the existing laws and regulations that could serve to protect Preble's and its habitat. Relevant Federal laws include the Clean Water Act, Endangered Species Act, Federal Power Act, Fish and Wildlife Coordination Act, Food Security Act, and National Environmental Policy Act. Federal regulations and policies have limited protection authority and scope for non-listed species. These statutes only recommend, not require, that projects carried out, funded, or permitted by the Federal government attempt to mitigate impacts to species of special concern due to scarcity or decline.

Colorado Division of Wildlife Regulations (Chapter 10, Article IV) classify *Z. hudsonius* as a ''nongame'' species. This designation means that permits must be obtained for take of Preble's meadow jumping mouse related to scientific, educational, or rehabilitation purposes. Preble's is a ''species of special concern'' in Colorado; however, this is not a statutory designation. Preble's is currently under consideration for endangered species designation in Colorado. In Wyoming, the Wyoming Game and Fish Department has classified *Z. hudsonius* as a nongame species protected under Wyoming Game and Fish Department Nongame Wildlife Regulations promulgated by WF23–1–103 and 23–1–302. This designation protects Preble's from takings and sales by only issuing permits for the purpose of scientific collection. While the above regulations limit the taking of Preble's, they provide no measures to protect the species' habitats. State listing encourages State agencies to allocate funds and exercise authority to achieve recovery, stimulate research, and allow redirection of priorities within State natural resource departments. However, without additional measures to protect habitat, such State laws are generally inadequate.

There are few regional or local laws, regulations, or ordinances that specifically protect Preble's meadow jumping mouse or its habitat from inadvertent or intentional adverse impacts. A myriad of local regulations, incentive programs, and open space programs exist, as documented in materials forwarded to the Service by the Colorado Department of Natural Resources. While certain regulations are designed to conserve wetlands or floodplains, it is unlikely that they effectively control land uses (grazing, mowing, cutting, burning) that may impact vegetation on which Preble's depends. Further, Preble's may be dependent on hibernacula sites outside the protected wetlands or floodplains. Many existing local regulations create a process of site plan review which ''considers'' or ''encourages'' conservation of wildlife, wetlands, and natural habitats. Effectiveness of local regulations in maintaining naturally functioning riparian corridors may vary greatly depending on how these apparently flexible regulations are implemented. Beyond direct impact to Preble's habitat, secondary impacts of development (increased recreational use, altered flow regimes and groundwater levels, and increase in domestic predators) may not currently be addressed at the local level.

Of note is the 1997 creation of a Preble's Meadow Jumping Mouse Working Group, organized by the Colorado Department of Natural Resources to initiate a collaborative planning process designed to produce a legally and scientifically sound approach to conservation of Preble's. This effort is supported in part by appropriations from Congress, specifically for the Preble's planning process. The Service is an active participant in this process and is fully supportive of the goal of developing a Preble's conservation plan and implementing agreements. However, there are no such plans or agreements currently in place. The Service anticipates that this planning process may lead to the creation of one or more Habitat Conservation Plans or to the application of the Service's discretionary rule-making authority pursuant to section 4(d) of the Endangered Species Act.

E. *Other natural or manmade factors affecting its continued existence.* Use of pesticides and herbicides has undoubtably increased across known Preble's meadow jumping mouse range as human land use has intensified. These chemicals could directly poison Preble's or may be ingested through contaminated food or water. Specific impacts to Preble's from pesticides and herbicides are not currently known. Intensive human development creates a range of additional environmental impacts (including but not limited to noise, and the degradation of air and water quality) that could alter Preble's behavior, increase the levels of stress, and ultimately contribute to loss of vigor or death of individuals, and extirpation of populations.

In summary, the Preble's meadow jumping mouse, historically a rare mammal, has declined. Seven counties in Colorado and two in Wyoming are known to support Preble's populations. Riparian habitats required to support Preble's have been severely modified or destroyed by human activities in many areas east of the Colorado Front Range and in southeastern Wyoming. With current human population increases, the loss and modification of riparian habitat continues. Existing regulations have proven to be inadequate to protect Preble's, as witnessed by its apparent decline and the continued destruction and modification of its habitats.

The Service has carefully assessed the best scientific and commercial information available regarding the past, present, and future threats faced by this species in developing this rule. Based on this evaluation, the preferred action is to list the Preble's meadow jumping mouse as a threatened species. The Service has determined that the Preble's meadow jumping mouse is likely to become endangered within the foreseeable future throughout all or a significant portion of its range and therefore meets the requirements to be listed as threatened. Based on 1997

survey data, Preble's is now known to exist in several additional sites in Colorado. In addition, 1997 studies in Douglas County, Colorado, suggest substantial occupied habitat exists along East Plum Creek and West Plum Creek. For this reason, the Service believes that a designation as threatened more accurately reflects the threats facing this species than the endangered status that was identified in the March 25, 1997, proposed rule. The Service knows of no substantial disagreement among scientists knowledgeable about Preble's regarding the sufficiency or accuracy of the available data relevant to this determination, which would serve as a basis for extension of the proposed rule. Critical habitat is not being proposed for the reasons stated below.

Critical Habitat

Critical habitat is defined in section 3 of the Act as: (i) the specific areas within the geographical area occupied by the species, at the time it is listed in accordance with the Act, on which are found those physical or biological features (I) essential to the conservation of the species and (II) that may require special management considerations or protection; and, (ii) specific areas outside the geographical area occupied by a species at the time it is listed, upon a determination that such areas are essential for the conservation of the species. ''Conservation'' means the use of all methods and procedures needed to bring the species to the point at which listing under the Act is no longer necessary.

Section 4(a)(3) of the Act, as amended, and implementing regulations (50 CFR 424.12) require that, to the maximum extent prudent and determinable, the Secretary designate critical habitat at the time the species is determined to be endangered or threatened. Service regulations (50 CFR 424.12(a)(1)) state that designation of critical habitat is not prudent when one or both of the following situations exist: (1) The species is threatened by taking or other human activity, and identification of critical habitat can be expected to increase the degree of threat to the species, or (2) such designation of critical habitat would not be beneficial to the species. The Service finds that designation of critical habitat is not prudent for Preble's meadow jumping mouse for the reasons described below.

Critical habitat receives consideration under section 7 of the Act with regard to actions carried out, authorized, or funded by a Federal agency (see Available Conservation Measures section). As such, designation of critical habitat may affect activities on Federal lands and may affect activities on non-Federal lands where such a Federal nexus exists. Potential benefits of critical habitat designation derive from section 7(a)(2) of the Act, which requires Federal agencies, in consultation with the Service, to ensure that their actions are not likely to jeopardize the continued existence of listed species or to result in the destruction or adverse modification of critical habitat of such species.

Critical habitat, by definition, applies only to Federal agency actions. 50 CFR 402.02 defines ''jeopardize the continued existence of'' as meaning to engage in an action that would reasonably be expected, directly or indirectly, to reduce appreciably the likelihood of both the survival and recovery of a listed species in the wild by reducing the reproduction, numbers, or distribution of that species. Both jeopardizing the continued existence of a species and adverse modification of critical habitat have similar standards and thus similar thresholds for violation of section 7 of the Act. In the section 7(a)(2) consultation process, the jeopardy analysis focuses on potential effects on the species' populations, whereas the destruction or adverse modification analysis focuses on habitat value, specifically on those constituent elements identified in the critical habitat listing.

Common to both jeopardy and destruction or adverse modification biological opinions is the requirement that the Service find an appreciable effect on both the species' survival and recovery. This is in contrast to the public perception that the adverse modification standard sets a lower threshold for violation of section 7 than that for jeopardy. Thus, Federal actions satisfying the standard for adverse modification are nearly always found to also jeopardize the species concerned, and the existence of designated critical habitat does not materially affect the outcome of consultation. Biological opinions that conclude that a Federal agency action is likely to adversely modify critical habitat but is not likely to jeopardize the species for which it is designated are extremely rare historically; none have been issued in recent years. Thus, the Service believes that, from a section 7 consultation perspective, little or no additional conservation benefit would be achieved for Preble's meadow jumping mouse by the designation of critical habitat.

Additionally, designation of critical habitat provides protection only on Federal lands or on non-Federal lands when there is Federal involvement, through authorization or funding or participation, in a project or activity. Four populations of the Preble's meadow jumping mouse are located on Federal lands administered by the U.S. Forest Service, U.S. Air Force and the Department of Energy. These agencies are aware of the species' occurrence at these sites and the requirement to consult with the Service. The Department of Energy (DOE) at Rocky Flats and the Air Force Academy have both been active in Preble's meadow jumping mouse survey, research and conservation. The DOE continues to study Preble's at Rocky Flats, has mapped occupied and potential habitat, and is developing a PMJM Protection Plan for the facility. The Air Force Academy has been active in surveying for Preble's and continues to support research into habitat use including radio tracking of animals. Warren Air Force Base and the Forest Service have supported some survey work with additional work remaining to be accomplished. In each case these facilities, Rocky Flats and the Air Force Academy, both of which support important populations, are well aware of their responsibilities regarding section 7. The designation of critical habitat would provide no change in their present operations and impart no additional benefit. Therefore, informing these agencies of the species location and need to consult is unnecessary.

Designation of critical habitat provides no limitations or constraints on private landowners if there is no Federal nexus, and, as such, provides the species no benefit. Activities on private lands rarely have a federal nexus. A Federal nexus may in some cases be found for parcels of lands where there is an activity either funded, authorized or permitted by a Federal agency. Under the Clean Water Act section 404 a permit is required for any activity resulting in the discharge of dredge and fill material from jurisdictional waters. Generally such activities on small parcels of private lands are excluded from individual permit requirements under the Corps section 404 Nationwide Permit program. In all cases where there is a Federal nexus to an activity occurring on private lands, any underlying Federal action (the issuance of a permit) triggering the standard for adverse modification would also be found to trigger the jeopardy standard, with the existence of designated critical habitat not materially affecting the outcome of consultation. Therefore such designation of critical habitat on balance would not afford the Preble's meadow jumping mouse any additional benefit.

Expansive blocks of public lands ensures that Federally sponsored activities will receive the benefit of section 7 consultation, regardless of whether or not critical habitat is designated. Protection of the habitat of the species will also be addressed through the Act's recovery process. Only through the recovery process will a recovery plan be created that will prescribe specific management actions and the establishment of numerical population goals. In addition, the landowners may choose to develop a habitat conservation plan through the section 10 permitting process that will manage for the conservation of the species. Thus, protection of habitat can be addressed through the recovery, section 10 and section 7 consultation processes, and designation of critical habitat would afford the Preble's meadow jumping mouse no additional benefit.

Listing of the Preble's meadow jumping mouse as a threatened species also publicizes the present vulnerability of this species and, thus, can be reasonably expected to increase the threat of vandalism or intentional destruction of the species habitat. In light of the vulnerability of this species to vandalism or the intentional destruction of its habitat (for example poisoning, lethal trapping, burning or cutting of habitat), the designation of critical habitat in and of itself and the publication of maps providing its precise locations and descriptions of essential elements, as required for the designation of critical habitat, would reasonably be expected to increase the degree of threat to the species and its habitat, increase the difficulties of law enforcement, and further contribute to the decline of Preble's.

The Service acknowledges that critical habitat may provide some minor benefit in that it may identify areas important to a species, call attention to those areas in special need of protection and contribute a positive influence for securing funding or land acquisitions, etc., if a parcel of land is designated as critical habitat. However, in this case, where identification of such areas is expected to exacerbate a potentially serious additional threat (vandalism), information regarding the special needs of the species for protection can be disseminated more effectively through alternative means, and such designation could also impart negative connotations and dissuade people from participating in conservation activities simply because an area is designated critical habitat.

Therefore, because of the increased threat of taking, the fact that designation of critical habitat would provide little different or greater benefit than that provided by the jeopardy standard under section 7 regulations, and that any minor benefits accruing from such designation are outweighed by its negative effects, the Service has determined that the designation of critical habitat for the Preble's meadow jumping mouse is not prudent.

The Service will continue its efforts to obtain more information on Preble's meadow jumping mouse biology and ecology, including essential habitat characteristics, current and historical distribution, and existing and potential sites that can contribute to conservation of the species. The information resulting from this effort will be used to identify measures needed to achieve conservation of the species, as defined under the Act. Such measures could include, but are not limited to, development of conservation agreements with the States, other Federal agencies, local governments, and private landowners and organizations.

Available Conservation Measures

Conservation measures provided to a species listed as endangered or threatened under the Act include recognition, recovery actions, requirements for Federal protection, and prohibitions against certain practices. Recognition through listing results in public awareness and conservation actions by Federal, State, and local agencies, private organizations, and individuals. The Act provides for possible land acquisition, cooperation with the States, and requires that recovery actions be carried out for all listed species. The protection required of Federal agencies and the prohibitions against taking and harm are discussed, in part, below.

Section 7(a) of the Act requires Federal agencies to evaluate their actions with respect to any species that is proposed or listed as endangered or threatened, and with respect to its critical habitat, if any is being designated. Regulations implementing this interagency cooperation provision of the Act are codified at 50 CFR part 402. Section 7(a)(2) requires Federal agencies to insure that activities they authorize, fund, or carry out are not likely to jeopardize the continued existence of the species or destroy or adversely modify its critical habitat. If a Federal action may affect a listed species or its critical habitat, the responsible Federal agency must enter into formal consultation with the Service.

The Preble's meadow jumping mouse occurs on lands administered by the U.S. Air Force, Department of Energy, U.S. Forest Service, Colorado Division of Wildlife, Colorado State Parks, Boulder County, Jefferson County, City of Boulder, and on private lands. For Federal lands where Preble's occur, the Act would require the appropriate land management agency to evaluate potential impacts to Preble's that may result from activities they authorize or permit. The Act requires consultation under section 7 of the Act for activities on Federal, State, county, or private lands, including tribal lands, that may impact the survival and recovery of Preble's, if such activities are funded, authorized, carried out, or permitted by Federal agencies. The Federal agencies that may be involved as a result of this proposed rule include the Service, Department of Energy, Forest Service, U.S. Army Corps of Engineers, Natural Resources Conservation Service, Bureau of Land Management, Bureau of Reclamation, Department of the Army, Department of the Air Force, Office of Surface Mining, Western Area Power Administration, Rural Utilities Service, Federal Energy Regulatory Commission, Department of Housing and Urban Development, Federal Highway Commission, and Environmental Protection Agency. Federally listing Preble's as a threatened species will require these agencies to consider potential impacts to Preble's prior to approval of any activity authorized or permitted by them (e.g., Clean Water Act's section 404 permits, grazing management, military maneuvers, bioremediation and hazardous materials cleanup, mining permitting and expansion, highway construction, etc.).

Federal agency actions that may require consultation as described in the preceding paragraph include: removing, thinning or altering vegetation; implementing livestock grazing management that alters vegetation during warm seasons; construction of roads or access along or through riparian areas; channelization and other alteration of perennial and intermittent streams and their hydrological regimes for flood control and other water management purposes; permanent and temporary damming of streams to create water storage reservoirs or deviate the stream's course; human activities in or near Preble's meadow jumping mouse habitats; construction of residential, commercial, and industrial developments, including roads, bridges, public utilities and telephone lines, pipelines, and other structures; bioremediation and hazardous materials

management, containment, and cleanup efforts such as those at Rocky Flats; and, sand and gravel and other types of mining activities within or upstream of Preble's meadow jumping mouse habitats.

The Act and implementing regulations set forth a series of general prohibitions and exceptions that apply to all listed wildlife. The prohibitions codified at 50 CFR 17.21, in part, make it illegal for any person subject to the jurisdiction of the United States to take (including harass, harm, pursue, hunt, shoot, wound, kill, trap, capture, or collect; or attempt any of these), import or export, ship in interstate commerce in the course of commercial activity, or sell or offer for sale in interstate or foreign commerce any listed species. It also is illegal to possess, sell, deliver, carry, transport, or ship any such wildlife that has been taken illegally. Certain exceptions apply to agents of the Service and State conservation agencies.

Permits may be issued to carry out otherwise prohibited activities involving listed wildlife under certain circumstances. Regulations governing permits are codified at 50 CFR 17.22 and 17.23. Such permits are available for scientific purposes, to enhance the propagation or survival of the species, and/or incidental take in connection with otherwise lawful activities. Information collections associated with these permits are approved under the Paperwork Reduction Act, 44 U.S.C. 3501 *et seq.*, and assigned Office and Management and Budget clearance number 1018–0094. For additional information concerning these permits and associated requirements, see 50 CFR 17.32.

Requests for copies of the regulations regarding listed wildlife and inquiries about prohibitions and permits may be addresses to U.S. Fish and Wildlife Service, P.O. Box 25486, Denver Federal Center, Denver, Colorado 80225 (telephone 303/236–8155, Facsimile 303/236–8192).

The Service adopted a policy on July 1, 1994 (59 FR 34272), to identify to the maximum extent practicable at the time a species is listed, those activities that would or would not constitute a violation of section 9 of the Act. The intent of this policy is to increase public awareness of the effect of the listing on proposed and ongoing activities within a species' range. The Service believes that, based upon the best available information, the following actions will not result in a violation of section 9, provided these activities are carried out in accordance with existing regulations and permit requirements:

(1) Activities authorized, funded, or carried out by Federal agencies (e.g., grazing management, agricultural conversions, wetland and riparian habitat modification, flood and erosion control, mineral development, housing and commercial development, recreational trail development, road and dam construction, hazardous material containment and cleanup activities, prescribed burns, pest control activities, pipelines or utility lines crossing riparian/wet meadow habitats, logging, military maneuvers and training) when such activity is conducted in accordance with any incidental take statement prepared by the Service in accordance with section 7 of the Act;

(2) Activities such as grazing management, flood and erosion control, agricultural conversions, wetland and riparian habitat modification, mineral development, housing and commercial development, road and dam construction, recreational trail development, hazardous material containment and cleanup activities, prescribed burns, pest control activities, pipelines or utility lines crossing riparian/wet meadow habitats, logging, military maneuvers and training when such activity does not occur in habitats suitable for the survival and recovery of the Preble's meadow jumping mouse, does not alter downstream hydrology or riparian habitat supporting Preble's, and does not result in actual death or injury to the species by significantly modifying essential behavioral patterns;

(3) Within the hibernation period and outside denning areas, controlled burns and mowing, or other activities that temporarily alter the Preble's meadow jumping mouse food sources. The period when mowing and burning activities would not impact the Preble's meadow jumping mouse nourishment may vary at specific locations, but would usually fall between October 15 and April 15 of every year;

(4) Human recreational activities undertaken on foot or horseback at breeding, feeding, and hibernating sites that do not degrade Preble's meadow jumping mouse habitat (e.g., waterfowl hunting, bird watching, sightseeing, photography, camping, hiking); and,

(5) Application of pesticides in accordance with label instructions, in areas that do not drain into Preble's meadow jumping mouse habitats.

Activities that the Service believes could potentially result in a violation of section 9 include, but are not limited to:

(1) Unauthorized or unpermitted collecting, handling, harassing, or taking of the species;

(2) Activities that directly or indirectly result in the actual death or injury death of Preble's meadow jumping mice, or that modify the known habitat of the species, thereby significantly modifying essential behavioral patterns (e.g., plowing, mowing, or cutting; conversion of wet meadow or riparian habitats to residential, commercial, industrial, recreational areas, or cropland; overgrazing; road and trail construction; water development or impoundment; mineral extraction or processing; off-highway vehicle use; and, hazardous material cleanup or bioremediation); when such activities are not carried out pursuant to either a section 10(a)(1)(B) permit issued by the Service; a protective regulation issued under section 4(d) necessary and advisable for the conservation of the species, or in accordance with any reasonable and prudent measures given by the Service under section 7(b)(4)(C)(ii) of the Act.

(3) The application or discharge of agrichemicals, or other pollutants, and pesticides, onto plants, soil, ground water, or other surfaces in violation of label directions, or any use following Service notification that such use, application or discharge is likely to harm the species; would be evidence of unauthorized use, application or discharge.

Questions regarding whether specific activities, such as changes in land use, will constitute a violation of section 9 should be directed to the Colorado Field Office (see **ADDRESSES** section).

The prohibition against intentional and unintentional ''take'' of listed species applies to all landowners regardless of whether or not their lands are within designated critical habitat (see 16 U.S.C. 1538(a)(1), 1532(1a) and 50 CFR 17.3). Section 10(a)(1)(B) authorizes the Service to issue permits for the taking of listed species incidental to otherwise lawful activities such as agriculture, surface mining, and urban development. Take permits authorized under section 9 must be supported by a habitat conservation plan (HCP) under section 10 that identifies conservation measures that the permittee agrees to implement to conserve the species, usually on the permittee's lands. The Service would approve an HCP, and issue a section 10(a)(1)(B) permit only if the plan would minimize and mitigate the impacts of the taking and would not appreciably reduce the likelihood of the survival and recovery of that species in the wild.

National Environmental Policy Act

The Service has determined that Environmental Assessments and Environmental Impact Statements, as defined under the authority of the

National Environmental Policy Act of 1969, need not be prepared in connection with regulations adopted pursuant to Section 4(a) of the Act. A notice outlining the Service's reasons for this determination was published in the **Federal Register** on October 25, 1983 (48 FR 49244).

Required Determinations

The Service has examined this regulation under the Paperwork Reduction Act of 1995 and found it to contain no information collection requirements. This rulemaking was not subject to review by the Office of Management and Budget under Executive Order 12866.

References Cited

A complete list of all references cited is available upon request from the Colorado Field Office (see **ADDRESSES** above).

Author. The primary author of this document is Peter Plage of the Colorado Field Office (see **ADDRESSES** section).

List of Subjects in 50 CFR Part 17

Endangered and threatened species, Exports, Imports, Reporting and recordkeeping requirements, Transportation.

Regulation Promulgation

Accordingly, the Service amends part 17, subchapter B of chapter I, title 50 of the Code of Federal Regulations, as amended, as set forth below:

PART 17—[AMENDED]

1. The authority citation for part 17 continues to read as follows:

Authority: 16 U.S.C. 1361–1407; 16 U.S.C. 1531–1544; 16 U.S.C. 4201–4245; Pub. L. 99–625, 100 Stat. 3500, unless otherwise noted.

2. Section 17.11(h) is amended by adding the following, in alphabetical order under Mammals, to the List of Endangered and Threatened Wildlife to read as follows:

§ 17.11 Endangered and threatened wildlife.

* * * * *

(h) * * *

Species		Historic range	Vertebrate population where endangered or threatened	Status	When listed	Critical habitat	Special rules
Common name	Scientific name						
Mammals:							
*	*	*	*	*	*		*
Mouse, Preble's meadow jumping.	*Zapus hudsonius preblei.*	U.S.A. (CO, WY)	.....do	T	636	NA	NA
*	*	*	*	*	*		*

Dated: May 8, 1998.

John G. Rogers,

Director, Fish and Wildlife Service.

[FR Doc. 98–12828 Filed 5–12–98; 8:45 am]

BILLING CODE 4310–55–P

Proposed Rules

Federal Register
Vol. 63, No. 92
Wednesday, May 13, 1998

This section of the FEDERAL REGISTER contains notices to the public of the proposed issuance of rules and regulations. The purpose of these notices is to give interested persons an opportunity to participate in the rule making prior to the adoption of the final rules.

OFFICE OF PERSONNEL MANAGEMENT

5 CFR PART 351

RIN 3206–AH95

Reduction in Force Offers of Vacant Positions

AGENCY: Office of Personnel Management.

ACTION: Proposed rulemaking.

SUMMARY: The Office of Personnel Management is proposing retention regulations that clarify existing policy on reduction in force offers of vacant positions.

DATES: Written comments will be considered if received no later than July 13, 1998.

ADDRESSES: Send or deliver written comments to Mary Lou Lindholm, Associate Director for Employment Service, Office of Personnel Management, Room 6F08, 1900 E Street, NW; Washington, DC 20415.

FOR FURTHER INFORMATION CONTACT: Thomas A. Glennon, or Jacqueline R. Yeatman, 202–606–0960, FAX 202–606–2329.

SUPPLEMENTARY INFORMATION:

Assignment Rights-General

Reduction in force assignment rights are covered in part 351, subpart G, of title 5, Code of Federal Regulations. Section 351.701(a) provides that a competing employee in retention tenure Groups I and II with current performance ratings of at least ''Minimally Successful'' who has been released from a competitive level is entitled to an offer of assignment under the retention regulations if the employee has ''Bumping'' or ''Retreating'' rights to an available position in the same competitive area.

Section 351.701(a) provides that the assignment right is limited to positions lasting at least 3 months with the same work schedule, and in the same competitive area, as the position of the released employee. The assignment right is to another position which requires no reduction, or the least possible, reduction, in representative rate.

Section 351.701(b)(2) covering bumping rights, and § 351.701(c)(2) covering retreat rights, provide that the available position must be within three grades or grade-intervals (or equivalent) of the employee's present position. However, under § 351.702(c)(2), an employee who is eligible for veterans' preference under the retention regulations, and who has a service-connected disability of 30 percent or more, has a retreat right to positions up to five grades or grade-intervals (or equivalent) of the employee's present position.

Assignment Rights-Offer of Vacant Positions

Section 351.201(b) provides that an agency is not required to offer a vacant position during a reduction in force. However, if the agency chooses to fill a vacancy with an employee who has been released under authority of 5 CFR part 351 from a competitive level, then the agency must make the offer consistent with the provisions found in subpart G of that part.

Section 351.704(a)(1) provides that an agency may satisfy an employee's right to assignment under section 351.701 by offering the employee assignment to a vacant position under § 351.201(b) if the offered position has a representative rate equal to the employee's entitlement under § 351.701. (As another option, § 351.704(a)(1) also provides that an agency may satisfy an employee's right to assignment under the administrative assignment provisions of § 351.705.)

Section 351.704(a)(1) is now revised to clarify longstanding OPM policy that an agency may also offer an employee assignment to a vacant position in lieu of separation by reduction in force under 5 CFR part 351.

Section 351.704(a)(1) is also revised to clarify longstanding OPM policy that an offer of assignment to a vacant position must be consistent with § 351.201(b) and § 351.701, including the grade limits applicable to bump and retreat set forth in § 351.701(b)(2) and § 351.701(c)(2). This revision modifies the decision of the Merit Systems Protection Board in Monk v. Department of the Navy, 68 M.S.P.R. 560 (1995), in which the Board held that the usual grade limits applicable to bump and retreat rights do not apply to reduction in force offers of vacant positions. Agencies may still make offers of vacant positions below the applicable grade limits under other authority (e.g., as an offer of voluntary change to lower grade in lieu of reduction in force).

Regulatory Flexibility Act

I certify that this regulation will not have a significant economic impact on a substantial number of small entities because it affects only certain Federal employees.

List of Subjects in 5 CFR Part 351

Administrative practice and procedure, Government employees.

U.S. Office of Personnel Management

Janice R. Lachance,

Director.

Accordingly, OPM proposes to amend part 351 of title 5, Code of Federal Regulations, as follows:

PART 351—REDUCTION IN FORCE

1. The authority citation for part 351 continues to read as follows:

Authority: 5 U.S.C. 1302, 3502, 3503, Section 351.801 also issued under E.O. 12828, 58 FR 2965.

2. In § 351.704, paragraph (a)(1) is revised to read as follows:

§ 351.704 Rights and prohibitions.

(a)(1) An agency may satisfy an employee's right to assignment under § 351.701 by assignment to a vacant position under § 351.201(b), or by assignment under any applicable administrative assignment provisions of § 351.705, to a position having a representative rate equal to that the employee would be entitled under § 351.701. An agency may also offer an employee assignment under § 351.201(b) to a vacant position in lieu of separation by reduction in force under 5 CFR part 351. Any offer of assignment under § 351.201(b) to a vacant position must meet the requirements set forth under § 351.701.

* * * * *

[FR Doc. 98–12623 Filed 5–12–98; 8:45 am]

BILLING CODE 6325–01–P

FEDERAL HOUSING FINANCE BOARD

12 CFR Parts 922, 931, 932, 933, 934, and 941

[No. 98–11]

RIN 3069–AA55

Election of Federal Home Loan Bank Directors

AGENCY: Federal Housing Finance Board.

ACTION: Proposed rule.

SUMMARY: The Federal Housing Finance Board (Finance Board) is proposing to amend its regulations on the election of Federal Home Loan Bank (Bank) directors. The rule would devolve responsibility for determining the eligibility of elective directors and administering the Bank director election process from the Finance Board to the Banks. The proposed rule is part of the Finance Board's continuing effort to transfer management and governance responsibilities to the Banks and is consistent with the goals of the Regulatory Reinvention Initiative of the National Performance Review.

DATES: The Finance Board will accept comments on the proposed rule in writing on or before June 29, 1998.

ADDRESSES: Mail comments to Elaine L. Baker, Secretary to the Board, Federal Housing Finance Board, 1777 F Street, N.W., Washington, D.C. 20006. Comments will be available for public inspection at this address.

FOR FURTHER INFORMATION CONTACT: Patricia L. Sweeney, Program Analyst, Compliance Assistance Division, Office of Policy, 202/408–2872, or Roy S. Turner, Jr., Attorney-Advisor, Office of General Counsel, 202/408–2512, Federal Housing Finance Board, 1777 F Street, N.W., Washington, D.C. 20006.

SUPPLEMENTARY INFORMATION:

I. Statutory and Regulatory Background

Pursuant to section 7 of the Federal Home Loan Bank Act (Act), which sets forth the eligibility requirements and the procedures for electing and appointing Bank directors, and regulations promulgated thereunder, the Finance Board's predecessor, the former Federal Home Loan Bank Board (FHLBB), determined the eligibility of all Bank directors, administered the Bank director elections, and appointed public interest directors. *See* 12 U.S.C. 1427 (1989); 12 CFR part 522 (1989). After Congress abolished the FHLBB in 1989, *see* Financial Institutions Reform, Recovery, and Enforcement Act of 1989 (FIRREA), Pub.L. 101–73, sec. 401, 103 Stat. 183 (Aug. 9, 1989), the Finance Board adopted the FHLBB regulations on Bank directors, without change. *See* 54 FR 36757 (Sept. 5, 1989), *codified at* 12 CFR part 932. The Finance Board subsequently amended its regulations to implement the changes FIRREA made to the eligibility requirements for, and to apply the conflicts of interest limitations FIRREA imposed on, Bank directors. 55 FR 1393 (Jan. 16, 1990); 56 FR 55205 (Oct. 25, 1991); *see* FIRREA, secs. 707, 710(b)(4), 103 Stat. 417, 418, *codified at* 12 U.S.C. 1427.

Since the enactment of FIRREA the Finance Board has determined the eligibility of all Bank directors, has administered the election of Bank directors, and has appointed public interest directors. As part of the Finance Board's continuing effort to devolve management and governance responsibilities to the Banks, the Finance Board believes it appropriate to transfer the administration of the elections, including the responsibility to determine the eligibility of elective directors, to the Banks. The proposal would not affect the appointment of public interest directors, which remains within the sole discretion of the Finance Board.

The proposed rule would amend, redesignate, or eliminate various provisions of part 932, and would include conforming amendments to parts 931, 933, 934, and 941. The Finance Board also is proposing to revise the current conflicts of interest and financial disclosure requirements established by part 922 of its regulations for appointed members of the Board of Directors of the Finance Board. All of the proposed changes are consistent with the goals of the Regulatory Reinvention Initiative of the National Performance Review. *See* E.O. 12861, 58 FR 48255 (Sept. 11, 1993).

II. Analysis of the Proposed Rule

The proposal would include a separate definition section for the election regulations, the principal provisions of which are described below.

A. Definitions—§ 932.1

1. ''Bona Fide Resident''— § 932.1

Both the Act and current regulation use the term ''bona fide resident'' to identify individuals eligible to serve as a director of a Bank. *See* 12 U.S.C. 1427(a); 12 CFR 932.18(a)(2) (1997). Neither the Act nor the regulation, however, defines the term. The proposed rule would define ''bona fide resident'' of a Bank district. The definition would include alternative means of being considered a ''bona fide resident'' of a Bank district.

First, an individual would be a ''bona fide resident'' if he or she maintains a principal place of residence within the Bank's district. The concept of a principal place of residence generally requires both physical presence and intent to remain, or an intent to return after an absence. An individual's principal place of residence usually is the same as the permanent residence reported to the Internal Revenue Service.

There have been some instances in which an officer or director of a member located in one state maintains a principal residence in an adjacent state, which happens to be in another Bank district. In such cases, the individual would not be eligible to serve as Bank director under a ''principal residence'' test. By interpretation, and on a case-by-case basis, the Finance Board has allowed such individuals to serve as Bank directors, provided they own or lease a residence, other than their principal residence, in the district.

As a second means of being deemed a ''bona fide resident,'' the proposal would codify this interpretation. The rule would deem an individual to be a ''bona fide resident'' if he or she owns or leases in his or her name a residence within the Bank's district, and maintains a requisite employment nexus, *i.e.*, if an elective director, he or she also is a director or officer of a member located within the district or, if an appointive director, he or she is employed within the Bank district. Qualifying residences might include vacation homes, or other homes used seasonally or on a part-time basis, that the individual owns or leases in his or her name. For elective directors, a person is eligible to serve only as a representative of the state in which the principal place of business of his or her employer (the member) is located, although the residence, whether principal or otherwise, may be in any state within the district.

2. ''Docket Number''—§ 932.1

Various provisions of the current regulations require a Bank to identify its members by name, city or county and state. As a matter of practice, the Finance Board assigns a docket number to each new member, which is used by the Finance Board and the Banks to identify that member. The proposed rule would define ''docket number'' as the number assigned by the Finance Board and used by the Finance Board and the Banks to identify a particular member. The term is used in several provisions of the proposed regulation and is

intended to assist staff of the Banks in administering the elections by distinguishing between members that have the same or similar names.

3. ''Member''—§ 932.1

Section 2(4) of the Act defines ''member'' as an institution that has subscribed for stock in a Bank. 12 U.S.C. 1422(4). For purposes of the election of directors, section 7(b) of the Act defines the term ''member'' as ''a member of a Federal Home Loan Bank which was a member of such bank at the end of'' the calendar year preceding the election. 12 U.S.C. 1427(b). The proposed rule would define ''member'' as an institution admitted to membership and owning capital stock in a Bank, which tracks the general definition of ''member.'' To conform to the section 7 definition of ''member,'' the proposal would include textual references to the ''record date'' where appropriate.

4. ''Record Date''—§ 932.1

The proposed rule defines December 31 of the year preceding the election as the ''record date'' for the Bank director elections.

5. ''Voting State''—§ 932.1

The proposed rule would define a ''voting state'' to mean the District of Columbia, Puerto Rico, or state in the United States in which a member's principal place of business is located as of the record date. Puerto Rico would be designated as the voting state for members whose principal place of business is located in the Virgin Islands, which conforms to current practice. Hawaii would be designated as the voting state for members whose principal place of business is located in Guam, which conforms to current practice, as well as for members whose principal place of business is located in American Samoa and the Commonwealth of Northern Marina Islands, which is new.

B. Dates—§ 932.2

Section 932.14(f) of the current regulation provides that if a date prescribed in the regulations falls on Saturday, Sunday or holiday, the next business day shall be included in the time allowed. *See* 12 CFR 932.14(f)(1997). The proposed rule would amend this provision by substituting ''federal holiday'' for ''holiday'' and expanding it to include dates set by the Banks pursuant to the proposal, as well as those specified in the regulations.

C. Director Elections—§ 932.3

1. Responsibilities of the Banks

Under the existing regulation, the Finance Board is solely responsible for the conduct and administration of the director elections. Proposed § 932.3 would transfer this responsibility to the Banks and would require them to administer and conduct an annual election to fill those directorships, the terms of which have been designated by the Finance Board as commencing on January 1 of the following year. That would include existing directorships that have been designated as continuing, plus any newly designated seats. The disinterested members of the board of directors, or a committee of disinterested directors, would have the responsibility for administering the election, which would allow their oversight and approval of the process, and would not preclude the use of staff as well. The proposal would provide that the term of each elective directorship shall commence on January 1 of the year immediately following the election. Each Bank would have the discretion to determine the dates for the various stages of the election process, so long as the Bank completes the process in sufficient time to allow newly elected directors to assume their seats on January 1 of the year following the election.

2. Designation of Elective Directorships

Section 7(a) of the Act provides that the board of directors of each Bank shall have a minimum of fourteen members: eight elective directors and six appointive directors. *See* 12 U.S.C. 1427(a). Section 7(b) of the Act requires the Finance Board to designate the number of elective directorships representing the members of each state in a Bank district. *See id.* 1427(b). The Act also requires the Finance Board to allocate the elective directorship seats among the states within the Bank district based upon the ratio of the required Bank stock held by members in the state to the total required Bank stock in the district, ensuring that ''in the case of each state such number shall not be less than one and shall be not more than six.'' *See id.* 1427(c).

Section 932.3(b) of the proposed rule carries forward the requirements of sections 7(a), 7(b) and 7(c) of the Act, requiring the Finance Board annually to designate the number of elective directorships for each Bank district. The proposed rule would specify the methodology by which the Finance Board would make the required allocation of directors. The process would begin by allocating one elective directorship to each state within a Bank district. If the number of elective directorships so allocated is less than eight, the proposed rule § 932.3(b)(2) would require the Finance Board to allocate the remaining directorships by using the method of equal proportions, until the total number allocated for the district equals eight. The method of equal proportions is the formula used by Congress to apportion congressional seats among the fifty states. The Act does not prescribe details of the Finance Board's allocation, and the Finance Board is proposing to adopt this method because it believes that the method is a reasonable means of implementing congressional intent on how Bank director seats should be allocated.

The Act also includes a grandfather provision, which guarantees that each state is entitled to at least the number of elective directorships that it had on December 31, 1960. *See* 12 U.S.C. 1427(c). Section 932.3(b)(3) carries this requirement forward in the proposed rule, requiring the Finance Board to allocate any additional elective directorships necessary to comply with the grandfather provision.

Section 7(e) of the Act authorizes the Finance Board to add an elective seat to the board of the Bank of the district in which Puerto Rico is located if at the time the district has fewer than five states. *See* 12 U.S.C 1427(e). Section 932.9 of the current regulation allocates one additional elective directorship to the Bank of New York, representing the Commonwealth of Puerto Rico. Section 923.3(b)(4) of the proposal would implement this requirement.

The Act also provides the Finance Board with the discretionary authority to increase the number of elective directorships up to thirteen, and the number of appointive directorships up to three-fourths of the number of elective directorships, in any district with five or more states. *See* 12 U.S.C. 1427(a). The proposal would include this provision, and would provide that in creating any additional appointive directorships the Finance Board may round up to the nearest whole number.

Section 932.3(c) of the proposed rules would require the Finance Board to notify each Bank, by May 10 of each year, of the total number of elective directorships established for the Bank and the number of elective directorships representing the members in each state in the district. The proposal also would codify current practice of allowing incumbent directors to retain their seats for the remainder of their term in the event that the Finance Board were to reduce the number of seats allocated to a particular state as part of the annual

designation of seats. The proposal also would include a transition provision, making clear that these amendments do not affect the current terms of office of the elective directors, and precluding the Banks from altering the commencement or termination dates of those terms. Thus, the proposal would retain the current staggering of elective directorship terms at each Bank.

D. Capital Stock Report—§ 932.4

Section 932.12 of the existing regulation requires each Bank to submit to the Finance Board by April 15 a report detailing the number of shares of Bank stock each of its members was required to hold at the end of the preceding calendar year. *See* 12 CFR 932.12 (1997). Proposed § 932.4 would continue this requirement, but would require submission of the report by April 10. Each Bank's report must include the following information for its district: the number of members within each voting state and the number of shares of capital stock required to be held by each member as of the record date and the aggregate total number of shares of capital stock required to be held by all members in each voting state as of the record date. The number of shares of stock is to be the greater of either the advances-to capital stock requirement or the minimum capital stock requirement. If a member has elected to purchase its minimum capital stock holding in installments, the number of shares of capital stock the member would be deemed to own for these purposes would be the cumulative total of shares actually purchased as of the record date.

As is currently the practice, the Finance Board would rely upon information from the capital stock report to designate elective directorships among the states in each Bank district. Each Bank also must notify each of its members of its minimum capital holdings pursuant to § 933.22(b)(1) and must certify to the Finance Board that it has done so and that to the best of its knowledge, the information within the capital stock report is accurate and complete.

Proposed § 932.4 would permit a member to object to its required capital holdings pursuant to § 933.22(b)(1), provided it does so in writing to the Finance Board within 15 days after the date on which it receives that information. The Finance Board then must promptly resolve any differences about the data, after which the Finance Board's determination would be final.

E. Determination of Member Votes—§ 932.5

Section 7(b) of the Act provides that in electing directors, each member may cast a number of votes equal to the number of shares of capital stock in the Bank the member was required to hold as of the record date, which may not exceed the average number of shares required to be held by all of the members as of the record date. *See* 12 U.S.C. 1427. At present, the Finance Board determines the number of votes each member may cast. Under the proposal, the Banks would assume this responsibility.

There are a number of provisions in the current regulations terminating voting rights on the basis of events occurring after the record date, such as a merger, withdrawal from membership or receivership. *See* 12 CFR §§ 933.24–933.28 (1997). By keying the existence of voting rights exclusively to the number of shares held as of the record date, the proposal would allow the legal successor to any such member to exercise whatever voting rights the member could have exercised in the election. In years subsequent to such a transaction, the successor's right to vote, if any, would be determined by its own membership status.

F. Elective Director Nominations—§ 932.6

1. Election Announcement

Section 932.13 of the existing regulation requires the Finance Board to provide a written election announcement to the members by June 15 and to allow members until July 15 to submit nominating certificates. *See* 12 CFR 932.13(a), (b) (1997). Under proposed § 932.6, the Banks would provide to each member a written announcement of the upcoming annual director election, and would be required to do so within a reasonable time in advance of the election. The election announcement must include: (1) the number of elective directorships designated as representing the members in each voting state in the Bank district; (2) the name of each Bank director, the name and city or county and state of the member each elective director serves as an officer or director or the organization with which each appointive director is affiliated, if any, and the expiration date of each director's term of office, (3) an attachment indicating the name and city, county and state of every member in the member's voting state, and the number of votes each such member may cast in the election; and (4) a nominating certificate for the appropriate voting state. If there is no election in a state, the Bank need not provide the attachment and the nominating certificate.

2. Nominations

Consistent with section 7(b) of the Act, proposed § 932.6(b) authorizes any member eligible to vote in an election to nominate a qualified individual to run for election for any open elective directorship in its voting state. *See* U.S.C. 1427(b). In order to do so, a member must submit to its Bank, before a deadline to be designated by the Bank, a nominating certificate that has been duly adopted or certified by its governing body or by an individual with authority to act on behalf of its governing body. The certificate must include the name of the nominee and the name, location and docket number of the member at which the nominee serves as an officer or director. A member may submit only one nominating certificate for each open directorship. Unlike the current rule, members would submit nominating certificates exclusively to their Bank; the Finance Board would no longer receive or review the certificates.

To provide members with sufficient time to complete and submit nominating certificates, proposed § 932.6(b)(3) requires the Banks to set a deadline for submissions to the Bank, which must be at least 30 days after the date on which the Bank mails the notice of the election. The Bank may not consider nominating certificates received after the deadline. To facilitate compliance reviews by Finance Board examiners, proposed § 932.6(b)(3) requires a Bank to retain all nominating certificates it receives for at least two (2) years after the date of election.

3. Accepting Nominations

Proposed § 932.6(c) requires each Bank, upon receiving a nomination, to notify the nominee in writing. The Bank will notify the nominee once regardless of the number of nominations received by the nominee. To accept a nomination, the nominee must submit an executed Form E–1 (See Appendix A to the Preamble) to the Bank prior to a deadline established by the Bank, which must be at least 30 days after the date of the notice of the nomination. A nominee may decline the nomination by advising the Bank in writing or by failing to submit the Form E–1 before the deadline.

G. Eligibility Requirements for Elective Directors—§ 932.7

Proposed § 932.7 would require the Banks to verify that nominees meet statutory and regulatory eligibility

requirements for elective directors before placing their names on the ballots. *See* 12 U.S.C. 1427. Under the current rule, the Finance Board makes the determination regarding eligibility. *See* 12 CFR 932.14 (1997).

The Banks must determine that each elective director-nominee is a citizen of the United States and a bona fide resident of the Bank's district. In addition, the nominee must be an officer or director of a member that is located in the voting state to be represented by the elective directorship and was a member as of the record date. The member also must meet the minimum capital requirements of its appropriate federal or state regulator.

The proposed rule would require information concerning state regulatory requirements only if the member is not subject to supervision by a federal regulator. If a member is subject to regulation by both a state and federal regulator, *i.e.*, state-chartered financial institution insured by the Federal Deposit Insurance Corporation, the individual need only submit information concerning the federal regulator's capital requirements. The term ''appropriate federal regulator'' has the same meaning as the term ''appropriate Federal banking agency'' in section 2[3] of the Federal Deposit Insurance Act, and, for federally insured credit unions, means the National Credit Union Administration. *See* 12 U.S.C. 1813(q); 12 CFR 931.26 (1997). The proposed regulation would continue to define the term ''appropriate state regulator'' to mean any state officer, agency, supervisor or other entity that has regulatory authority over, or is empowered to institute enforcement action against, a member. *See* 12 CFR 933.1(f) (1997).

Under the proposed rule, the Banks would (as the Finance Board has done) verify a nominee's eligibility by relying on the information each nominee provides on Form E–1. The proposed rule does not provide for any review of an adverse decision on a particular nominee's eligibility. The Finance Board considered establishing some such mechanism, but has opted not to do so, principally due to the time constraints involved and the relatively straightforward nature of the eligibility requirements. Moreover, the procedures adopted for making such determinations will be subject to the scrutiny of the Finance Board's examiners. The Finance Board specifically requests comments on the need for such a provision.

To assist the Banks in their eligibility determinations, the proposed rule includes three provisions describing situations in which a nominee would not be eligible to be a director. Each of these provisions is based on a statutory prohibition. Specifically, a nominee is not eligible to become an elective director if he or she is currently an elective director, unless the current term of office would expire before the commencement of the new term of office. In addition, a nominee's prospective service must not be barred by the term limit provisions of the Act, and a nominee may not be an incumbent appointive director. The term limit provision makes ineligible any person who has been elected to, and served all or part of, each of three consecutive full terms of office as an elective director, if less than two years have passed since the expiration of the last term. *See* 12 U.S.C. 1427(d)(term limit provision). Any such individual would be eligible to run for an elective directorship that begins two years after the end of that director's third term.

H. Election Process—§ 932.8

1. Ballots

Similar to the current process conducted by the Finance Board, the proposed rule would require the Bank to prepare a ballot for each voting state with a directorship to be filled in the election, and to mail the ballot to all members located in that state that were members as of the record date. An institution that becomes a member after the record date is not eligible to vote in that year's election, and a Bank may not provide any such institution with a ballot or allow it to vote during that year. The ballot must include certain minimum information, including an alphabetical listing of the names of each nominee, the name, location and docket number of the member at which each nominee serves, the nominee's title or position with the member, and the number of elective directorships to be filled. The Bank must prepare and mail the ballot promptly after verifying the eligibility of the nominees, and must include on the ballot a statement that write-in candidates are not permitted and a confidentiality statement that the Bank will not disclose how the member voted, which is intended to maintain ballot secrecy.

The rule would allow a Bank to include other relevant information on the ballot, at its discretion, such as the number of votes that the respective member may cast. The proposed rule permits Banks to conduct a 30-day balloting period, at a minimum.

2. Lack of Nominees

In those instances where the number of nominations received for an open elective directorship in any state is less than or equal to the number of directorships to be filled in the elections, the proposed § 932.8(b) requires a Bank to declare elected any eligible nominee. The Bank also must notify the members in the affected voting state that the directorships have been filled without an election due to a lack of nominees. If there is no nominee for a particular seat, the Bank shall declare the seat vacant and the Bank's board of directors shall fill the vacancy by majority vote, in accordance with the provision regarding vacant Bank directorships. Any person chosen to fill a vacancy must meet all of the eligibility requirements for that seat, which means that it could not be filled by a director or officer of a member located in another state, or by a person barred by the term limits provisions from serving as an elective director.

3. Voting

The proposed rule provides that a member may cast a number of votes equal to the amount of stock required to be held as of the record date. The rule also would provide that a member may not pool its votes for a single nominee, when there are two or more open elective directorships to be filled; any nominee selected will receive only the number of votes that the member is entitled to cast. Proposed § 932.8(c) also would prohibit a member from splitting its votes among the nominees for a single open elective directorship.

Proposed § 932.8(c) further requires a member to vote for only one nominee for each available elective directorship. Each nominee shall receive all of the votes the member is entitled to cast. The member must execute the ballot by resolution of its governing body or by an individual with authority to act on behalf of its governing body, and deliver it to the Bank before the closing date established by the Bank. The closing date must be at least 30 days after the ballots are mailed to the members. A member may not change a ballot after it has been delivered to the Bank, and any ballots not cast in accordance with these requirements will be void.

4. Counting Ballots

Proposed § 936.8(d) provides that a Bank may not open any ballot until after the closing date and may not include any ballot delivered after the closing date. Promptly after the polls close, each Bank must tabulate the votes cast in accordance with the regulatory requirements and declare elected the nominee who received the highest number of votes. If more than one elective directorship is to be filled, the

Bank must declare elected the nominee who received the next highest number of votes and so on until all open elective directorships are filled. In the event of a tie for the last available seat, the proposed rule requires the board of directors of the Bank, by majority vote, to declare elected one of the nominees for whom the number of votes cast was tied. Proposed § 932.8(d)(3) requires the Bank to retain all ballots for at least two (2) years after the date of the election, and bars it from disclosing the way in which a particular member voted.

5. Report of Election

Promptly following the election, proposed § 932.8(e) requires each Bank to provide written notice of the election results to the Finance Board, all members in its district, and each nominee. The report of the election must include: (1) the name of the newly elected director, the name and location of the member at which he or she serves and his or her title or position at the member; (2) the voting state the newly elected director represents; (3) the expiration date of the new director's term of office; (4) the number of members voting in the election and the number of votes actually cast, each reported by voting state; and (5) the number of votes cast for each nominee.

I. Prohibition on Actions to Influence Director Elections—§ 932.9

1. Prohibition

Section 932.9 of the proposed rule revises and restates the coverage of the prohibition on actions to influence the election of Bank directors contained in § 931.15 of the current rule. *See* 12 CFR 931.15 (1997). Proposed § 932.5(a)(1) would prohibit any director, officer, attorney, employee, or agent of the Finance Board or of a Bank from directly or indirectly communicating, in any form, support for the nomination or election of a particular individual for an elective directorship, or from taking any other action to influence the votes for the directorship. Proposed § 932.9 would extend to members the prohibition on communications indicating that any official of the Finance Board or of a Bank supports a particular candidate, but members would not be subject to the ''take any other action'' element of the prohibition. In effect, the provision would allow members to express opinions about director nominees so long as they do not suggest that the Finance Board or the Bank endorses a particular candidate.

2. Exception for Incumbent Bank Directors

Proposed § 932.9(b) would provide an exception from the prohibition on actions to influence the election. The exception would permit an incumbent Bank director acting in his or her personal capacity to support the nomination or election of any individual, provided that the director does not purport to represent the views of the Bank, the Finance Board, or any director, officer, attorney, employee or agent of the Bank or of the Finance Board. The use of the word ''any'' is intended to allow a director to promote his or her own candidacy, as well as that of other persons. The reference to ''personal capacity'' is intended to preclude the use of a director's official title, position, or authority associated with the position of Bank director, such as through use of Bank stationery, to endorse a candidate.

J. Selection of Appointive Directors—§ 932.10

1. Selection

Consistent with section 7(a) of the Act, proposed § 932.10 would provide that the Finance Board has sole discretion to select all appointive directors. *See* 12 U.S.C. 1427(a). For ease of administration and to ensure uniform treatment and rigorous review, the Finance Board will continue to rely upon Form A–1 (See Appendix A to the Preamble), the Appointive Director Eligibility Certification Form, to elicit the information it requires to determine whether prospective and incumbent appointive directors meet all of the statutory eligibility requirements. In order to reduce the reporting burden, the Finance Board has revised Form A–1 and is proposing to eliminate Form A–2.

2. Term of Office

Proposed § 932.10 designates January 1 as the commencement date for appointive directors' terms of office.

K. Conflicts of Interest Policy for Bank Directors—§ 932.11

1. Adoption of Conflicts of Interest Policy

To prevent conflicts of interest that may affect a Bank director in the performance of his or her official duties, the proposed rule includes a conflicts of interest provision that would replace the financial disclosure requirements and the prohibitions on service, financial interests, financial relationships, and gifts in the current regulation. *See* 12 CFR 932.18(b)–(d), 932.21(b)–(c) (1997). The proposal would require the board of directors of each Bank to adopt a written conflicts of interest policy, and would specify its minimum contents. The Finance Board intends the proposed provisions, which are somewhat more general in nature and afford more latitude to the Banks, to more closely parallel the requirements of general corporate practices.

Under proposed § 932.11(a), the conflicts of interest policy each Bank adopts, at a minimum, must:

(1) Require the directors to administer the affairs of the Bank fairly and impartially and without discrimination in favor of or against any member or nonmember borrower, *See* 12 U.S.C. 1427(j);

(2) Prohibit the use of a director's official position for personal gain;

(3) Require directors to disclose actual or apparent conflicts of interest, and establish procedures for addressing such conflicts;

(4) Provide internal controls to ensure that reports are filed and the conflicts are disclosed and resolved in accordance with the conflicts of interest requirements; and

(5) Establish procedures to monitor compliance with the conflicts of interest policy.

2. Disclosure and Recusal

Proposed § 932.11(b) requires a director to inform promptly the board of directors of any and all situations where the director or any immediate family member has a financial interest in a matter before the board of directors. This disclosure also applies to any financial interest the director may have in any organization or any individual doing business with the Bank, excluding any interest relating to the member at which the director serves. The proposed rule also requires each director to refrain from participating in deliberations, determinations or voting concerning any matter, that directly or indirectly affects the financial or other personal interests of the director or a member of his or her immediate family, or that would result in a detriment to the Bank or unfair advantage to the Bank or its members. For example, this prohibition would preclude a director from serving as a consultant to his or her Bank. All directors also are required to provide any additional information required by the board or its designee to consider and resolve any conflicts of interest.

The proposed rule also would prohibit directors from disclosing or using any confidential information the director acquires in the course of official duties, to obtain a financial benefit for

themselves, their immediate family, or their member.

3. Gifts

Section 932.11(c) of the proposed regulation would prohibit a director or immediate family member from accepting any substantial gift that the recipient has reason to believe is given in order to influence a director's actions, or where acceptance of the gift could have the appearance of influencing the director's performance of his or her official duties. For purposes of this provision, § 932.11(e) defines the term ''substantial gift'' to mean gifts of more than token value; (ii) entertainment or hospitality the cost of which is in excess of what considered reasonable, customary, and accepted business practice; (iii) any other items or services for which a director pays less than market value.

4. Compensation

Section 931.11(d) of the proposed regulation would prohibit a director from accepting compensation for services performed for the Bank from any source other than the Bank for which the services are performed.

5. Definitions

Proposed § 932 defines terms that are used in the conflicts of interest section of the regulation.

Section 932.11(e)(1) of the proposed rule defines ''immediate family member'' to mean a Bank director's parent, sibling, spouse, child, or dependent or any other relative sharing the same residence as the director.

Section 932.11(e)(2) defines the term ''financial interest'' to mean a direct or indirect interest in any activity, transaction, property, or relationship that involves receiving or providing something of monetary value, and includes, but is not limited to: (i) Any contractual right to the payment of money, whether contingent or fixed; (ii) ownership or control of 10 percent or more of any class of equity security, or any security, including subordinated debt; (iii) employment in a policy making position; or (iv) service as an officer, director, partner, or as a trustee or in a similar fiduciary capacity.

L. Reporting Requirements for Bank Directors—§ 932.12

1. Annual Report

Under §§ 932.18(f) and 932.21(g) of the current rules, every appointive and elective director must annually submit to his or her Bank either an executed form A–1 (appointive directors) or E–1 (elective directors). The Finance Board believes that the current annual reporting requirements may be unnecessarily burdensome and duplicative when there have been no changes since the director last submitted such information. Therefore, under § 932.12(a) of the proposed rule, if there have been no changes since a director last submitted the requested information, a director need only annually submit a certification stating that no changes have occurred. The director must make this certification by signing section A of the appropriate parts of Form E–1, for elective directors, or A–1, for appointive directors. If changes have occurred, proposed § 932.12(a) would require the director to complete the appropriate parts of either Form E–1 or A–1. Under the proposed rule, both elective and appointive directors would submit their annual reports to their Bank, but the Banks would be required to forward a copy of the Form A–1 to the Finance Board.

2. Report of Noncompliance

Proposed § 932.12(b) carries forward the requirements of the existing regulation that appointive and elective directors who know or have reason to believe at any time they no longer meet the statutory or regulatory eligibility requirements, must report the facts causing the loss of eligibility in writing within 30 days of first discovering those facts. *See* 12 CFR 932.18(f); 12 CFR 932.21(g)(2)(1997). Under the current regulation, such reports are filed only with the Finance Board; the proposal would require all directors to notify the Bank, but appointive directors also would be required to forward a copy to the Finance Board.

M. Ineligible Bank Directors—§ 932.13

Consistent with section 7(f) of the Act, § 932.13 of the proposed rule provides that a directorship (whether elective or appointive) will immediately become vacant upon the determination by the Finance Board or the Bank (for elective directors) or by the Finance Board (for appointive directors) that the director no longer meets any of the statutory or regulatory eligibility requirements, or has failed to comply with the reporting requirements under proposed § 932.12. *See* 12 U.S.C. 1427(f). As is the case under the existing regulation, an elective director who has been determined to be ineligible or to have failed to comply with the reporting requirements may not continue to act as a director. *See* 12 U.S.C. 1427(f)(3); 12 CFR 932.21(f) (1997). Also, consistent with the existing regulation an appointive director who has been determined to be ineligible or who has failed to comply with the reporting requirements may continue to serve as a director until a successor assumes the appointive directorship or the term of office expires, whichever occurs first. *See* 12 U.S.C. 1427(f)(2); 12 CFR 932.18(e)(1). The Finance Board, in its sole discretion, would retain the authority to grant an appointive director a period of time, not longer than ninety (90) days, to come into compliance with the eligibility or reporting requirements.

N. Vacant Bank Directorships—§ 932.14

1. Vacant Elective Directorships

Proposed § 932.14 implements the provisions of section 7(f) of the Act that concern vacant elective directorships. *See* 12 U.S.C. 1427(f)(1), (3). Under the proposed rule, as soon as practicable after a vacancy occurs, a Bank must fill the unexpired term of office of a vacant elective directorship by a majority vote of the remaining directors, and may do so regardless of whether the remaining directors constitute a quorum of the board. A person filling a vacancy must satisfy all of the statutory and regulatory eligibility requirements for elective directors, which the Bank must verify before allowing the person to assume the office. Promptly after verifying the individual's eligibility, the Bank must provide a written notice to the Finance Board and each of its members that includes the name of the new elective director, the name and location of the member for which the new director serves, the new director's title or position with the member, the voting state the new director represents, and the expiration date of the new director's term of office.

2. Vacant Appointive Directorships

Proposed § 932.14(b) implements the provisions of section 7(f) of the Act that concern vacant appointive directorships. *See* 12 U.S.C. 1427(f)(1), (2). Under the proposed rule, as soon as practicable after a vacancy occurs, the Finance Board must fill the unexpired term of office of a vacant appointive directorship in the same manner it fills open appointive directorships. Promptly after filling a vacant appointive directorship, the Finance Board must provide a written notice to the appropriate Bank that includes the name of the new appointive director, the name and location of the organization with which the new director is affiliated, if any, the new director's title or position with such organization, and the expiration date of the new director's term of office. The Bank, in turn, must promptly provide this information to each of the members within its district.

O. Minimum Number of Elective Directorships—§ 932.15

Proposed § 932.15 redesignates the list of grandfathered directorships and revises it to identify only those states that were entitled to more than one elective directorship on December 31, 1960. The substance of the grandfather provision for the remaining states is preserved through the proposed designation provision, which would allocate a minimum of one seat to each state.

P. Technical Changes to Part 932

Additional changes to provisions of part 932 that concern Bank directors are intended to eliminate obsolete references and reorganize provisions that appear in the current regulation. Accordingly, the Finance Board is proposing to redesignate the following provisions of Part 932 without change: § 932.26, concerning the location of Bank board of directors and committee meetings, redesignated to § 932.16 of subpart B; § 932.27, concerning the compensation and expenses of Bank directors, to § 932.17 of subpart B; § 932.40, concerning selection by the Bank of officers and employees, to § 932.18 of subpart C; and § 932.41, concerning compensation of Bank officers and employees, to § 932.19 of subpart C. The Finance Board is proposing to eliminate provisions of part 932 that would be rendered obsolete by the proposed changes. *See* 12 CFR 932.23, 932.28–29, 932.50–51, 932.60–62.

Q. Part 922

The Finance Board has identified the financial and service prohibitions and reporting requirements applicable to the four Finance Board directors appointed by the President, by and with the advice of the Senate (appointed Finance Board directors) as unnecessarily burdensome or duplicative. *See* 12 U.S.C. 1422a(b)(1)(B); 12 CFR part 922. Accordingly, the Finance Board proposes to eliminate part 922 of its regulations. Repeal of part 922 is consistent with the goal of the Regulatory Reinvention Initiative of the National Performance Review to reduce the total number of regulations of executive agencies.

Section 2A(b)(1)(B) of the Act requires appointed Finance Board directors to be citizens of the United States. *See* 12 U.S.C. 1422a(b)(1)(B). Because an individual appointed Finance Board director must satisfy all statutory conditions, § 922.2, which essentially reiterates the statutory requirements is unnecessary.

Section 2A(b)(2)(C) imposes conflicts of interest limitations on appointed Finance Board directors, including a prohibition on serving as a director or officer of any Bank or any member of any Bank, or holding shares of, or any other financial interest in, any member of any Bank. *See* 12 U.S.C. 1422a(b)(2)(C). Under the Ethics in Government Act of 1978, as amended, 5 U.S.C. App. 101 *et seq.*, and the implementing regulations promulgated by the Office of Government Ethics (OGE), 5 CFR parts 2635 and 2636, appointed Finance Board directors are subject to conflicts of interest limitations that are more exacting than, and encompass the prohibitions imposed by, section 2A of the Act. OGE regulations also require appointed Finance Board directors to disclose as a part of the Senate confirmation process and annually thereafter in writing to the Finance Board's designated agency ethics official and OGE, detailed information regarding financial interests that may pose conflicts of interest. *See* 5 U.S.C. App. 101(c); 5 CFR 2634.201, 2634.202 (1997). Therefore, the conflicts of interest provisions contained in §§ 922.3 through 922.5, essentially duplicate existing reporting requirements, and thus are unnecessary.

R. Parts 931, 933, 934, and 941

The Finance Board is proposing to make conforming changes to parts 931, 933, 934, and 941 of its regulations. *See* 12 CFR parts 931, 933, 934, and 941. The Finance Board is proposing to eliminate definitions of terms that appear currently in part 932 but would no longer be used under the proposal. *See* id. §§ 931.13–40.

Section 932.3 of the current rule concerns Bank dividends which the Finance Board is proposing to redesignate without change to part 934 of the Finance Board's regulations, which concerns the operations of the Banks. *See id.* part 934.

Part 933 of the Finance Board's regulations concern membership in the Banks. *See id.* part 933. The proposed changes to part 932 would conflict with certain provisions of the membership rule that concern voting rights. Accordingly, the Finance Board is proposing to eliminate all references to voting rights that appear in § 933.18 and §§ 933.24 through 933.28.

III. Regulatory Flexibility Act

The proposed rule implements statutory requirements binding on all Banks, all Bank members, and all prospective and incumbent Bank directors. The Finance Board is not at liberty to make adjustments in those requirements to accommodate small entities. The Finance Board has not imposed any additional regulatory requirements that will have a disproportionate impact on small entities. In addition, in an effort to reduce the reporting burden on prospective and incumbent Bank directors, the Finance Board has streamlined Form E–1, the Elective Director Eligibility Certification Form, and Form A–1, the Appointive Director Eligibility Certification Form, eliminated Forms E–2 and A–2, and will allow individuals to certify that no changes have occurred since they last submitted required information rather than completing anew the entire form. Thus, in accordance with the provisions of the Regulatory Flexibility Act, the Finance Board hereby certifies that this proposed rule, if promulgated as a final rule, will not have a significant economic impact on a substantial number of small entities. 5 U.S.C. 605(b).

IV. Paperwork Reduction Act

The Finance Board has submitted to the Office of Management and Budget (OMB) an analysis of the collection of information contained in Forms E–1 and A–1 and the proposed rule, described more fully in part II of the *Supplementary Information*. The Finance Board will use the information collection to determine whether prospective and incumbent appointive directors satisfy the statutory and regulatory eligibility and reporting requirements. Only individuals meeting these requirements may serve as appointive Bank directors. *See* 12 U.S.C. 1427(a), (f)(2). The Banks and, where appropriate, the Finance Board, will use the information collection to determine whether prospective and incumbent elective directors satisfy the statutory and regulatory eligibility and reporting requirements. Only individuals meeting these requirements may serve as elective Bank directors. *See id.* 1427(a), (b), (f)(3). Responses are required to obtain or retain a benefit. *See id.* 1427. The Finance Board and Banks will maintain the confidentiality of information obtained from respondents pursuant to the collection of information as required by applicable statute, regulation, and agency policy. Books or records relating to this collection of information must be retained as provided in the regulation.

Likely respondents and/or recordkeepers will be the Banks, Bank members, and prospective and incumbent Bank directors. Potential respondents are not required to respond to the collection of information unless the regulation collecting the information

displays a currently valid control number assigned by the OMB. *See* 44 U.S.C. 3512(a).

The estimated annual reporting and recordkeeping hour burden is:

a. Number of respondents	3,442
b. Total annual responses	3,442
Percentage of these responses collected electronically	0
c. Total annual hours requested	1,172
d. Current OMB inventory	376
e. Difference	796

The estimated annual reporting and recordkeeping cost burden is:

a. Total annualized capital/startup costs	$180,000.00
b. Total annual costs (O&M)	24,000.00
c. Total annualized cost requested	0
d. Current OMB inventory	0
e. Difference	$204,000.00

Comments concerning the accuracy of the burden estimates and suggestions for reducing the burden may be submitted to the Finance Board in writing at the address listed above.

The Finance Board has submitted the collection of information to OMB for review in accordance with section 3507(d) of the Paperwork Reduction Act of 1995, *codified at* 44 U.S.C. 3507(d). Comments regarding the proposed collection of information may be submitted in writing to the Office of Information and Regulatory Affairs of the Office of Management and Budget, Attention: Desk Officer for Federal Housing Finance Board, Washington, D.C. 20503 by June 29, 1998.

List of Subjects

12 CFR Part 922

Conflict of interests.

12 CFR Part 931

Banks, banking, Federal home loan banks.

12 CFR Part 932

Banks, banking, Conflict of interests, Elections, Ethical conduct, Federal home loan banks, Financial disclosure, Reporting and recordkeeping requirements.

12 CFR Part 933

Credit, Federal home loan banks, Reporting and recordkeeping requirements.

12 CFR Part 934

Federal home loan banks, Securities, Surety bonds.

12 CFR Part 941

Federal home loan banks, Organization and functions (Government agencies).

Accordingly, the Federal Housing Finance Board hereby proposes to amend chapter IX, title 12, parts 922, 931, 932, 933, 934, and 941 of the Code of Federal Regulations as follows:

PART 922—[REMOVED]

1. Under the authority in 12 U.S.C. 1422a and 1422b, remove part 922.

PART 931—DEFINITIONS

1. The authority citation for part 931 continues to read as follows:

Authority: 12 U.S.C. 1422a and 1422b.

§§ 931.13 through 931.40 [Removed]

2. Remove §§ 931.13 through 931.40.

§§ 931.11 and 931.12 [Redesignated as §§ 931.5 and 931.6]

3. Redesignate §§ 931.11 and 931.12 as §§ 931.5 and 931.6, respectively.

PART 934—OPERATIONS OF THE BANKS

1. The authority citation for part 934 continues to read as follows:

Authority: 12 U.S.C. 1422a, 1422b, 1431(g), 1432(a), and 1442.

§ 932.3 [Redesignated as § 934.17]

2. Redesignate § 932.3 as § 934.17.

PART 932—DIRECTORS, OFFICERS, AND EMPLOYEES OF THE BANKS

1. Revise the heading of part 932 to read as set forth above.

2. Revise the authority citation for part 932 to read as follows:

Authority: 12 U.S.C. 1422a(a)(3), 1422b(a), 1426, and 1427; 42 U.S.C. 8101 *et seq.*

3. Revise the table of contents of part 932 to read as follows:

Subpart A—Definitions

Sec.
932.1 Definitions.
932.2 Dates.

Subpart B—Bank Directors

932.3 Director Elections.
932.4 Capital Stock Report.
932.5 Determinations of member votes.
932.6 Elective director nominations.
932.7 Eligibility requirements for elective directors.
932.8 Elections process.
932.9 Prohibition on actions to influence director elections.
932.10 Selection of appointive directors.
932.11 Conflicts of interest policy for Bank directors.
932.12 Reporting requirements for Bank directors.
932.13 Ineligible Bank directors.
932.14 Vacant Bank directorships.
932.15 Minimum number of elective directorships.
932.16 Site of board of directors and committee meetings.
932.17 Compensation and expenses of Bank directors.

Subpart C—Selection of Bank Officers and Employees.

932.18 Selection of Bank officer and employees.
932.19 Compensation of Bank officers and employees.

4. Designate §§ 932.1 and 932.2 as subpart A and add a subpart heading to read as follows:

Subpart A—Definitions

5. Revise § 932.1 to read as follows:

§ 932.1 Definitions.

For purposes of this part:

Act means the Federal Home Loan Act, as amended (12 U.S.C. 1421 *et seq.*).

Bank or *Banks* means a Federal Home Loan Bank or the Federal Home Loan Banks.

Bona fide resident of a Bank district means an individual who:

(1) Maintains a principal residence within the Bank district; or

(2) Owns or leases in his or her own name a residence within the Bank district and, if serving as an elective director, is an officer or director of a member located in a voting state within the Bank district; or

(3) If serving as an appointive director, is employed within a voting state within the Bank district.

Docket Number means the number assigned to each member by the Finance Board and used by the Finance Board and the Banks to identify a particular member.

Finance Board means the agency established as the Federal Housing Finance Board.

Member means an institution admitted to membership and owning capital stock in a Bank.

Record date means December 31 of the calendar year immediately preceding the election year.

Voting state means the District of Columbia, Puerto Rico, or the state of the United States in which a member's principal place of business, as determined in accordance with part 933 of this chapter, is located as of the record date. The voting state of a member with a principal place of business located in the U.S. Virgin Islands as of the record date shall be Puerto Rico, and the voting state of a member with a principal place of business located in American Samoa,

Guam, or the Commonwealth of the Northern Mariana Islands as of the record date shall be Hawaii.

6. Add § 932.2 to subpart A to read as follows:

§ 932.2 Dates.

If any date specified in this part, or specified by a Bank pursuant to this part, falls on a Saturday, Sunday, or federal holiday, the relevant time period shall be deemed to include the next business day.

7. Designate §§ 932.3 through 932.17 as subpart B and add a subpart heading to read as follows:

Subpart B—Bank Directors

8. Add § 932.3 to subpart B to read as follows:

§ 932.3 Director elections.

(a) *Responsibilities of the Banks.* Each Bank annually shall conduct an election the purpose of which is to fill all elective directorships designated by the Finance Board as commencing on January 1 of the calendar year immediately following the year of the election. Subject to the provisions of the Act and in accordance with the requirements of this part, the disinterested members of the board of directors of each Bank, or a committee of disinterested directors, shall administer and conduct the annual election of directors. The term of office of each elective directorship shall be two years and shall commence on January 1 of the calendar year immediately following the year in which the election is held. Each Bank shall complete the election in sufficient time to allow newly elected directors to assume their seats on January 1 of the year immediately following the election.

(b) *Designation of elective directorships.* The Finance Board annually shall establish the number of elective directorships for each Bank, which are to be allocated as follows:

(1) One elective directorship shall be allocated to each state within the Bank district;

(2) If the total number of elective directorships allocated pursuant to paragraph (b)(1) of this section is less than eight, the Finance Board shall allocate additional elective directorships among the states, using the method of equal proportions, until the total allocated for the Bank equals eight;

(3) If the number of elective directorships allocated to any state pursuant to paragraphs (b)(1) and (2) of this section is less than the number allocated to that state on December 31, 1960, as specified in § 932.15, the Finance Board shall allocate such additional elective directorships to that state until the total allocated equals the number allocated to the Bank on December 31, 1960;

(4) Pursuant to section 7(e) of the Act, the Federal Home Loan Bank of New York is hereby allocated one additional elective directorship, which is designated as representing the members in the Commonwealth of Puerto Rico;

(5) Pursuant to section 7(a) of the Act, in any Bank district that includes five or more states, the Finance Board may increase the number of elective directorships up to thirteen, and the number of appointive directorships up to three-fourths of the number of elective directorships. In determining the number of appointive directorships, the Finance Board may round up to the nearest whole number.

(c) *Notification.* On or before May 10 of each year, the Finance Board shall notify each Bank in writing of the total number of elective directorships established for the Bank and the number of elective directorships designated as representing the members in each voting state in the Bank district. If the Finance Board's annual designation of elective directorships for a particular state would result in a decrease in the number of seats allocated to that state for the following year, the decrease shall not require any incumbent director to surrender his or her directorship prior to the expiration of the full term of office.

(d) *Transition.* The term of office of each elective directorship existing on the effective date of this section shall continue to its scheduled expiration date, and the Banks may not thereafter alter the commencement or expiration date for any elective directorship in conducting the annual election of directors.

9. Add § 932.4 to subpart B to read as follows:

§ 932.4 Capital Stock Report.

(a) On or before April 10 of each year, each Bank shall submit to the Finance Board, for its use in designating the elective directorships, and to each member a capital stock report that indicates, as of the record date, the number of members in each voting state in the Bank's district, and the number of shares of capital stock required to be held by each member (identified by docket number), and the aggregate total number of shares of capital stock required to be held by all members in each voting state in the Bank's district. The Bank shall certify to the Finance Board that to the best of its knowledge the information provided in the capital stock report is accurate and complete, and that it has notified each member of its minimum capital holdings pursuant to § 933.22(b)(1) of this chapter. A member may object to its required capital holdings determined under § 933.22(b)(1) of this chapter by notifying the Finance Board and its Bank in writing within 15 days after the date on which the member receives that information. The Finance Board shall promptly resolve any differences, which determination by the Finance Board shall be final.

(b) A Bank shall determine the number of shares of capital stock each member is required to hold as of the record date in the following manner:

(1) The number of shares of capital stock shall be equal to the greater of the advances-to-capital stock requirement under § 935.15(a) of this chapter, or the minimum capital stock requirement under § 933.20(a) of this chapter.

(2) If a member has elected to purchase its minimum required capital stock in installments under § 933.20(b)(2) of this chapter, the number of shares of capital stock required to be held as of the record date shall be the cumulative total of shares of capital stock actually purchased as of the record date.

10. Add § 932.5 to subpart B to read as follows:

§ 932.5 Determination of member votes.

(a) *Authority.* The Bank shall determine, in accordance with this section, the number of votes each member of the Bank may cast in the election of directors.

(b) *Determination.* The number of votes a member may cast for any elective director nominee shall be the lesser of the number of shares of capital stock the member was required to hold as of the record date, as determined in accordance with § 932.4(b), or the average number of shares of capital stock required to be held by all of the members in its voting state as of the record date.

11. Add § 932.6 to subpart B read as follows:

§ 932.6 Elective director nominations.

(a) *Election announcement.* Within a reasonable time in advance of an election, a Bank shall provide to each member in its district a written notice of the election that includes:

(1) The number of elective directorships designated as representing the members in each voting state in the Bank district;

(2) The name of each incumbent Bank director, the name and location of the member at which each elective director

serves, and the name and location of the organization with which each appointive director is affiliated, if any, and the expiration date of each Bank director's term of office;

(3) An attachment indicating the name, location, and docket number of every member in the member's voting state, and the number of votes each such member may cast in the election, as determined in accordance with § 932.5(b); and

(4) A nominating certificate.

(b) *Nominations.* (1) Any member that is entitled to vote in the election may nominate an eligible individual to fill each available elective directorship for its voting state by submitting to its Bank, prior to a deadline to be established by the Bank, a nominating certificate duly adopted by the member's governing body or by an individual authorized to act on behalf of the member's governing body.

(2) The nominating certificate shall include the name of the nominee and the name, location, and docket number of the member at which the nominee serves as an officer or director.

(3) The Bank shall establish a deadline for submitting nominating certificates, which shall be no earlier than 30 calendar days after the date on which the Bank mails the notice required by paragraph (a) of this section, and the Bank shall not accept certificates received after that deadline. The Bank shall retain all nominating certificates for at least two years after the date of the election.

(c) *Accepting nominations.* A Bank shall notify in writing any person nominated for an elective directorship promptly upon receipt of the nominating certificate. A person may accept the nomination only by submitting an executed Form E–1 to the Bank prior to the deadline established by the Bank. (Form E–1 is available pursuant to § 900.51 of this chapter). A Bank shall allow each nominee at least 30 calendar days after the date of the notice of nomination within which to submit the executed form. A nominee may decline the nomination by so advising the Bank in writing, or by failing to submit the Form E–1 prior to the deadline. Each Bank shall retain all information received under this paragraph for at least two years after the date of the election.

12. Add § 932.7 to subpart B read as follows:

§ 932.7 Eligibility requirements for elective directors.

(a) *Eligibility verification.* A Bank shall verify that each nominee meets all of the eligibility requirements for elective directors set forth in the Act and this part before placing that nominee on the ballot prepared by the Bank under § 932.8(a).

(b) *Eligibility requirements.* Each elective director, and each nominee, shall be:

(1) A citizen of the United States;

(2) A bona fide resident of the Bank district; and

(3) An officer or director of a member that is located in the voting state to be represented by the elective directorship, was a member of the Bank as of the record date, and meets all minimum capital requirements established by its appropriate federal regulator or appropriate state regulator. For purposes of this paragraph (b)(3), the term *appropriate federal regulator* has the same meaning as the term ''appropriate Federal banking agency'' in section 2[3] of the Federal Deposit Insurance Act (12 U.S.C. 1813(q)), and, for federally insured credit unions, shall mean the National Credit Union Administration, and the term *appropriate state regulator* means any state officer, agency, supervisor, or other entity that has regulatory authority over, or is empowered to institute enforcement action against, a member.

(c) *Restrictions.* A nominee is not eligible if he or she:

(1) Is an incumbent elective director, unless:

(i) The incumbent director's term of office would expire before the new term of office would begin; and

(ii) The new term of office would not be barred by the term limit provision of section 7(d) of the Act.

(2) Is a former elective director whose service would be barred by the term limit provision of section 7(d) of the Act.

(3) Is an incumbent appointive director.

13. Revise § 932.8 to read as follows:

§ 932.8 Election process.

(a) *Ballots.* Promptly after verifying the eligibility of all nominees in accordance with § 932.7(a), a Bank shall prepare a ballot for each voting state for which an elective directorship is to be filled and shall mail the ballot to all members within that state that were members as of the record date. A ballot shall include at least the following provisions:

(1) An alphabetical listing of the names of each nominee for the member's voting state, the name, location, and docket number of the member at which each nominee serves, the nominee's title or position with the member, and the number of elective directorships to be filled by members in that voting state in the election;

(2) A statement that write-in candidates are not permitted; and

(3) A confidentiality statement prohibiting the Bank from disclosing how a member voted.

(b) *Lack of nominees.* If, for any voting state, the number of nominees is equal to or less than the number of elective directorships to be filled in the election, the Bank shall not prepare or distribute a ballot, and shall declare elected any eligible nominee, declare vacant any elective directorship that lacks an eligible nominee, and notify the members in the affected voting state in writing that the directorships have been filled without an election due to a lack of nominees. If necessary, as soon thereafter as practicable, the board of directors shall fill, by a majority vote, any elective directorship that has been declared vacant for a lack of a nominee, in accordance with § 932.14(a).

(c) *Voting.* For each directorship to be filled, a member may cast the number of votes determined by the Bank pursuant to § 932.5. A member may not split its votes among multiple nominees for a single directorship, nor, where there are multiple directorships to be filled for a voting state, may it cumulatively vote for a single nominee. To vote, a member shall:

(1) Mark on the ballot the name of not more than one of the nominees for each elective directorship to be filled in the member's voting state. Each nominee so selected shall receive all of the votes that the member is eligible to cast.

(2) Execute the ballot by resolution of the member's governing body, or by an appropriate writing signed by an individual authorized to act on behalf of the governing body.

(3) Deliver the executed ballot to the Bank on or before the closing date that has been established by the Bank, which shall be no earlier than 30 calendar days after the date the ballots are mailed in accordance with paragraph (b) of this section. A member may not change a ballot after it has been delivered to the Bank.

(4) Any ballots cast in violation of this subsection shall be void.

(d) *Counting ballots.* A Bank shall not open any ballot until after the closing date, and may not include in the election results any ballot received after the closing date. Promptly after the closing date, each Bank shall tabulate, by each voting state, the votes cast in accordance with paragraph (c) of this section, and shall declare elected the nominee receiving the highest number of votes.

(1) If more than one elective directorship is to be filled in a voting state, the Bank shall declare elected

each successive nominee receiving the next highest number of votes until all open elective directorships for that voting state are filled.

(2) In the event of a tie for the last available seat, the incumbent board of directors of the Bank shall, by a majority vote, declare elected one of the nominees for whom the number of votes cast was tied.

(3) The Bank shall retain all ballots it receives for at least two years after the date of the election, and shall not disclose how any member voted.

(e) *Report of election.* Promptly following the election, each Bank shall provide written notice to its members, to each nominee, and to the Finance Board of the following:

(1) The name of each director-elect, the name and location of the member at which he or she serves, and his or her title or position at the member;

(2) The voting state represented by each director-elect;

(3) The expiration date of the term of office of each director-elect;

(4) The number of members voting in the election and the total number of votes cast, both reported by states; and

(5) The number of votes cast for each nominee.

14. Revise § 932.9 to read as follows:

§ 932.9 Prohibition on actions to influence director elections.

(a) *Prohibition.* Except as provided in paragraph (b) of this section:

(1) No director, officer, attorney, employee, or agent of the Finance Board or of a Bank may:

(i) Communicate in any manner that a director, officer, attorney, employee, or agent of the Finance Board or of a Bank, directly or indirectly, supports the nomination or election of a particular individual for an elective directorship; or

(ii) Take any other action to influence votes for a directorship.

(2) No member may take any action prohibited by paragraph (a)(1)(i) of this section.

(b) *Exception for incumbent Bank directors.* A Bank director acting in his or her personal capacity may support the nomination or election of any individual for an elective directorship, provided that no Bank director shall purport to represent the views of the Bank, the Finance Board, any other director, or any officer, attorney, employee, or agent of the Bank or of the Finance Board concerning the nomination or election of a particular individual for an elective directorship.

15. Revise § 932.10 to read as follows:

§ 932.10 Selection of appointive directors.

(a) *Selection.* In accordance with the Act, the Finance Board, in its sole discretion, shall select all appointive directors.

(b) *Term of office.* The term of office of each appointive directorship shall commence on January 1.

16. Revise § 932.11 to read as follows:

§ 932.11 Conflict of interests policy for Bank directors.

(a) *Adoption of conflict of interests policy.* Each Bank shall adopt a written conflict of interests policy that shall apply to all Bank directors. At a minimum, the conflicts of interest policy of each Bank shall:

(1) Require the directors to administer the affairs of the Bank fairly and impartially and without discrimination in favor of or against any member or nonmember borrower;

(2) Prohibit the use of a director's official position for personal gain;

(3) Require directors to disclose actual or apparent conflict of interests and establish procedures for addressing such conflicts;

(4) Provide internal controls to ensure that reports are filed and that conflicts are disclosed and resolved in accordance with this section; and

(5) Establish procedures to monitor compliance with the conflict of interests policy.

(b) *Disclosure and recusal.* (1) A director shall promptly inform the board of directors whenever he or she, or any immediate family member, has any financial interest in any matter before the board. Directors also shall disclose any financial interest in any organizations or with any individuals doing business with the Bank, other than an interest relating to the member at which the director serves. All directors shall refrain from considering, or voting on, any issue before the board that could result in a conflict, self-dealing, or any other circumstances that would result in a detriment to the Bank or in a noncompetitive, favored, unfair advantage either to the Bank or its members.

(2) All directors promptly shall provide to the full board of directors, audit committee of the board of directors, or to such other committee as the board of directors may establish for this purpose, any information relating to conflicts or potential conflicts of interests.

(3) Directors shall not disclose or use confidential information received by them solely by reason of their position with the Bank to obtain a financial interest for themselves or their immediate family members or member institutions of which they are an officer or director.

(c) *Gifts.* Directors and their immediate family members shall not accept any substantial gift where the recipient has reason to believe that the gift is given in order to influence the director's actions as a member of the Bank's board of directors, or where acceptance of such gift gives the appearance of influencing the director's actions as a member of the board.

(d) *Compensation.* Directors shall not accept compensation for services performed for the Bank from any source other than the Bank for whom the services are performed.

(e) *Definitions.* For purposes of this section:

(1) *Immediate family member* means parent, sibling, spouse, child, or dependent, or any other relative sharing the same residence as the director.

(2) *Financial interest* means a direct or indirect financial interest in any activity, transaction, property, or relationship that involves receiving or providing something of monetary value, and includes, but is not limited to:

(i) Any contractual right to the payment of money, whether contingent or fixed;

(ii) Ownership or control of ten percent or more of any class of equity security, or any security, including subordinated debt;

(iii) Employment in a policy making position; or

(iv) Service as an officer, director, partner, or as a trustee or in a similar fiduciary capacity.

(3) *Substantial Gifts* includes:

(i) Gifts of more than token value;

(ii) Entertainment or hospitality, the cost of which is in excess of what is considered reasonable, customary, and accepted business practices; or

(iii) Any other items or services for which a director pays less than market value.

17. Revise § 932.12 to read as follows:

§ 932.12 Reporting requirements for Bank directors.

(a) *Annual reporting.* On or before March 1 of each year, each director shall submit to his or her Bank an executed Form E–1 (for elective directors) or an executed Form A–1 (for appointive directors), as appropriate. (Form A–1 is available pursuant to § 900.51 of this chapter). The Bank shall promptly forward a copy of each Form A–1 to the Finance Board.

(b) *Report of noncompliance.* If an elective or appointive director knows or has reason to believe that he or she no longer meets the eligibility requirements set forth in the Act or this part, the

director shall so inform the Bank in writing within 30 calendar days of first learning of the facts causing the loss of eligibility. An appointive director also shall inform the Finance Board at the same time, and in the same manner, that he or she informs the Bank.

18. Revise § 932.13 to read as follows:

§ 932.13 Ineligible Bank directors.

(a) *Elective directors.* Upon a determination by the Finance Board or a Bank that an elective director no longer satisfies the eligibility requirements set forth in the Act or this part, or has failed to comply with the reporting requirements of § 932.12, the elective directorship shall immediately become vacant. Any elective director that is determined to have failed to comply with the eligibility or reporting requirements shall not continue to act as a Bank director.

(b) *Appointive directors.* Except as provided herein, upon a determination by the Finance Board that an appointive director no longer satisfies the eligibility requirements set forth in the Act, or has failed to comply with the reporting requirements of § 932.12, the appointive directorship shall immediately become vacant. Notwithstanding the vacancy, an appointive director may continue to serve until a successor assumes the directorship or the term of office expires, whichever occurs first, and the Finance Board, in its sole discretion, may allow an appointive director up to 90 calendar days to comply with the eligibility or reporting requirements.

19. Revise § 932.14 to read as follows:

§ 932.14 Vacant Bank directorships.

(a) *Vacant elective directorships.* (1) As soon as practicable after a vacancy occurs, a Bank shall fill the unexpired term of office of a vacant elective directorship by a majority vote of the remaining Bank directors regardless of whether the remaining Bank directors constitute a quorum of the Bank's board of directors.

(2) An individual so selected to fill a vacant elective directorship shall satisfy all of the eligibility requirements for elective directors set forth in the Act and this part, and shall provide to the Bank an executed Form E–1. The Bank shall verify the individual's eligibility in accordance with § 932.7(a) before allowing the individual to assume the directorship, and shall retain the information it receives in accordance with § 932.6(c).

(3) Promptly after verifying the individual's eligibility under paragraph (a)(2) of this section, a Bank shall notify the Finance Board and each member located in the Bank's district in writing of the following:

(i) The name of the new elective director, the name and location of the member (identified by docket number) at which the new director serves, and the new director's title or position with the member;

(ii) The voting state that the new elective director represents; and

(iii) The expiration date of the new elective director's term of office.

(b) *Vacant appointive directorships.* (1) As soon as practicable after a vacancy occurs, the Finance Board shall fill the unexpired term of office of a vacant appointive directorship.

(2) Promptly after filling a vacant appointive directorship, the Finance Board shall notify the new appointive director's Bank in writing of the following:

(i) The name of the new appointive director, the name and location of the organization with which the new director is affiliated, if any, and the new director's title or position with such organization; and

(ii) The expiration date of the new appointive director's term of office.

(2) Promptly after receiving the notice required by paragraph (b)(2) of this section, a Bank shall provide each of its members with the information described in paragraphs (b)(2)(i) and (ii) of this section.

§§ 932.15 through 932.19 [Removed]

20. Remove §§ 932.15 through 932.19.

§ 932.20 [Redesignated as § 932.15]

21. Redesignate § 932.20 as § 932.15 and revise the second sentence and table to read as follows:

§ 932.15 Minimum number of elective directorships.

* * * The following list sets forth the states whose members held more than one (1) seat on December 31, 1960:

State	No. of elective directorships on Dec. 31, 1960
California	3
Colorado	2
Illinois	4
Indiana	5
Iowa	2
Kansas	3
Kentucky	2
Louisiana	2
Massachusetts	3
Michigan	3
Minnesota	2
Missouri	2
New Jersey	4
New York	4
Ohio	4
Oklahoma	2
Pennsylvania	6
Tennessee	2
Texas	3
Wisconsin	4

§§ 932.21 through 932.25 [Removed]

22. Remove §§ 932.21 through 932.25.

§ 932.26 [Redesignated as § 932.16]

23. Redesignate § 932.26 as § 932.16 of subpart B.

§ 932.27 [Redesignated as § 932.17]

24. Redesignate § 932.27 as § 932.17 of subpart B.

§§ 932.28 through 932.39 [Removed]

25. Remove §§ 932.28 through 932.39.

26. Designate §§ 932.18 and 932.19 as subpart C and add a subpart heading to read as follows:

Subpart C—Selection of Bank Officers and Employees

§ 932.40 [Redesignated as § 932.18]

27. Redesignate § 932.40 as § 932.18 of subpart C, remove paragraph (d), and revise the section heading and paragraph (a) introductory text to read as follows:

§ 932.18 Selection of Bank officers and employees.

(a) *Bank presidents.* The board of directors of each Bank may appoint a president, who shall be the chief executive officer of the Bank, subject to the following limitations:

* * * * *

§ 932.41 [Redesignated as § 932.19]

28. Redesignate § 932.41 as § 932.19 of subpart C and revise the section heading to read as follows:

§ 932.19 Compensation of Bank officers and employees.

* * * * *

§§ 932.42 through 932.62 [Removed]

29. Remove §§ 932.42 through 932.62.

PART 933—MEMBERS OF THE BANKS

1. The authority citation for part 933 continues to read as follows:

Authority: 12 U.S.C. 1422, 1422a, 1422b, 1423, 1424, 1426, 1430, 1442.

2. Amend § 933.18 by revising paragraph (e) to read as follows:

§ 933.18 Determination of appropriate Bank district for membership.

* * * * *

(e) *Effect of transfer.* A transfer of membership pursuant to this section shall be effective for all purposes, but shall not affect voting rights in the year of the transfer and shall not be subject to the provisions on termination of membership set forth in section 6 of the Act or §§ 933.27, 933.28, and 933.30, including the restriction on reacquiring Bank membership set forth in § 933.31.

* * * * *

§ 933.24 [Amended]

3. Amend § 933.24 by removing paragraph (b)(4).

§ 933.25 [Amended]

4. Amend § 933.25 by removing paragraph (f).

§ 933.26 [Amended]

5. Amend § 933.26 by removing paragraph (e).

§ 933.27 [Amended]

6. Amend § 933.27 by removing paragraph (g).

§ 933.28 [Amended]

7. Amend § 933.28 by removing paragraph (d).

PART 941—OPERATIONS OF THE OFFICE OF FINANCE

1. The authority citation for part 941 continues to read as follows:

Authority: 12 U.S.C. 1422b, 1431.

2. Amend § 941.7 by revising paragraph (f)(2) to read as follows:

§ 941.7 Office of Finance Board of Directors.

* * * * *

(f) * * *

(2) *Private Citizen member.* The Office of Finance shall pay compensation and expenses to the Private Citizen member of the OF board of directors in accordance with the requirements for payment of compensation and expenses to Bank directors set forth in § 932.17 of this chapter, except that, for these purposes:

(i) The Office of Finance policy on director compensation must be approved by the board of directors of the Finance Board;

(ii) Section 932.15(a)(3) and (c)(1)(ii) of this chapter shall not apply; and

(iii) The terms ''average compensation per director'' and ''ACPD,'' as used in § 932.15 of this chapter, shall be deemed to mean ''maximum compensation of the Private Citizen member''.

Note: The following Appendix will not appear in the Code of Federal Regulations Appendix A to Preamble—Director Eligibility Certification Forms A–1 and E–1

BILLING CODE 6725–01–U

Federal Home Loan Bank System

Appointive Director Eligibility Certification Form (A-1)

INSTRUCTIONS

If you need assistance in completing this form or have any questions, please contact (name, title, phone and fax numbers, e-mail address) at the Federal Housing Finance Board (Finance Board).

Please return this completed form and any attachments by the applicable deadline to (name and title or office), at the Finance Board.

Who Must File and When

Prospective FHLBank Appointive Directors

If the Finance Board is considering you for, or has selected you to fill, a Federal Home Loan Bank (FHLBank) appointive directorship and you want to accept the appointment, if offered, you must complete this form and return it to the Finance Board on or before the deadline it establishes. The time allowed includes the next business day if the date specified by the Finance Board occurs on a Saturday, Sunday, or federal holiday. Any individual who does not submit this form to the Finance Board by the deadline will be deemed to have declined the appointment.

Current FHLBank Appointive Directors

On or before March 1 of each year during your term of office as a FHLBank appointive director other than the calendar year in which you were appointed, you must complete this form and return it to the Finance Board to update, if necessary, the information previously provided concerning compliance with the eligibility requirements for appointive directors. If you do not submit this form by the March 1 deadline, the Finance Board may declare the appointive directorship you fill to be vacant. The time allowed includes the next business day if March 1 occurs on a Saturday, Sunday, or federal holiday.

Part I -- General Information

The Finance Board will use the information you provide in Part I to ensure that its records are as up-to-date and accurate as possible.

Section A -- Certification

If no changes have occurred since the last time you completed Part I, you may complete Part I by signing the certification.

Section B -- Questions

If you have never completed, or if changes have occurred since the last time you completed, Part I, you must provide answers to each of the questions.

1. Please place your initials on the line that applies to you. You may check only one line. For example, if you are currently serving as a FHLBank appointive director and are filing the required annual update, check the line marked "I am a FHLBank appointive director."

2. Please print or type your full name.

3. Please list the name of each organization with which you are currently employed whether you work full- or part-time or are paid for your work, your title or position at that organization, the telephone and fax numbers where you can be reached, your electronic mail address, if any, the organization's street address, and, if different, the organization's mailing address. You may attach additional sheets if necessary.

4. For each directorship you currently hold, please list the name of the organization and the city or county and state in which the organization is located. You may attach additional sheets if necessary.

5. For each full-time public office to which you have been appointed or elected, please list the public office, your title or position, and the term of office.

6. For each full-time position you hold with a political party, please list the name of the political party, your title or position, and the date you entered into the position.

7. Section 1427(a) of the Federal Home Loan Bank Act (Bank Act) imposes certain conflicts of interest limitations on FHLBank appointive directors. See 12 U.S.C. § 1427(a). In order for the Finance Board to ensure your compliance with the statutory limitations, please attach a copy of the most recent information you disclosed to your FHLBank under its conflicts of interest policy concerning your or your immediate family's financial or other personal interests.

Part II -- Eligibility Requirements

The Finance Board will use the information you provide in Part II to determine whether you meet, or continue to meet, the statutory eligibility requirements for FHLBank appointive directors. See 12 U.S.C. § 1427. Only individuals who satisfy these requirements may be appointed as, or continue to serve as, appointive directors.

Section A -- Certification

If no changes have occurred since the last time you completed Part II, you may complete Part II by signing the certification.

Section B -- Questions

If you have never completed, or if changes have occurred since the last time you completed, Part II, you must provide answers to each of the questions.

1. Section 1427(a) of the Bank Act requires each FHLBank appointive director to be a United States citizen. See 12 U.S.C. § 1427(a). Please place your initials in the appropriate column.

2. Section 1427(a) of the Bank Act requires each FHLBank appointive director to be a bona fide resident of a state within the FHLBank district served or to be served by the director. See 12 U.S.C. § 1427(a). Please place your initials on the appropriate line. You will be deemed a bona fide resident of a FHLBank district under two circumstances. First, you will be deemed a bona fide resident if you maintain a principal place of residence in a state within the FHLBank district. To claim a location as your principal place of residence generally requires both physical presence and intent to remain or to return after an absence. Your principal place of residence usually is the same as the permanent residence reported to the Internal Revenue Service. Please list that address. Second, you will be deemed a bona fide resident if you own or lease in your own name a residence in, and are employed in , a state within the FHLBank district. The second basis for a finding of bona fide residence requires "residence plus," that is, simple residence and an employment nexus, rather than residence with domiciliary intent. Please list the address of every other residence you either own or lease in your own name, including vacation homes or homes you use seasonally or on a part-time basis, and the name and location of your employer and any consumer or community organization of which you are a director, officer, employee, or member. The term "consumer or community organization" means an organization that currently is representing, and has represented for at least two years, consumer or community interests on banking services, credit needs, housing, or financial consumer protections. You may attach additional sheets if necessary.

3. Finance Board policy requires each community interest FHLBank appointive director to represent currently, and to have represented actively or been involved with for at least two years, consumer or community interests on banking services, credit needs, housing, or financial consumer protections. Please place your initials on the appropriate line. Please provide a description of your experience, including the length of time you have represented these interests. You may attach additional sheets if necessary.

4 and 5. Section 1427(a) of the Bank Act and Finance Board policy require each community interest FHLBank appointive director to be a director, officer, employee, or member of a consumer or community organization that currently is representing, and has represented for at least two years, consumer or community interests on banking services, credit needs, housing, or financial consumer protections, and that operates in a state within the district of the appropriate FHLBank. See 12 U.S.C. § 1427(a). For both questions 4 and 5, please place your initials on the appropriate line. In answering question 5, please provide a description of the consumer or community organization with which you are affiliated, including the length of time it has represented consumer or community interests on banking services, credit needs, housing, or financial consumer protections. You may attach additional sheets if necessary.

Federal Home Loan Bank System

Appointive Director Eligibility Certification Form

The reporting period is January 1, 19___ through December 31, 19___.

PART I
GENERAL INFORMATION

Section A -- Certification

I hereby certify that no changes have occurred since I last completed and submitted to the Finance Board Part I of the FHLBank Appointive Director Eligibility Certification Form.

_____ _____
Signature Date

Section B -- Questions

1. Check one of the following:

_____ I am a prospective FHLBank appointive director

_____ I am currently a FHLBank appointive director

2. Print or type your full name: _____

3. List your current employment:

_____ _____
Name of organization Your title or position

_____ _____ _____
Telephone number Fax number E-mail address

_____ _____ _____ _____
Street City or county State Zip code

_____ _____ _____ _____
Mailing address (if different) Street City or county State Zip code

PART II
ELIGIBILITY REQUIREMENTS

Section A -- Certification

I hereby certify that no changes have occurred since I last completed and submitted to the Finance Board Part II of the FHLBank Appointive Director Eligibility Certification Form.

_____ _____
Signature Date

Section B -- Questions

For each question, place your initials in the appropriate column.

	Yes	No	
1.	____	____	Are you a citizen of the United States?
2.	____	____	Are you a bona fide resident of a state within the FHLBank district?

Provide the address of your permanent residence:

Street	City or county	State	Zip code

Provide the address of every other residence you either own or lease in your own name:

Street	City or county	State	Zip code

Provide the location of your employer and any consumer or community organization of which you are a director, officer, employee, or member:

Name of organization	City or county	State	Your title or position

Yes **No**

3. ____ ____ Are you currently representing and have you actively represented or been involved with for at least two years, consumer or community interests on banking services, credit needs, housing, or financial consumer protections?

Describe your experience, including the length of time you have represented these interests.

Yes **No**

4. ____ ____ Are you a director, officer, employee, or member of a consumer or community organization that operates in a state within the FHLBank district?

5. ____ ____ Is the consumer or community organization with which you are affiliated currently representing, and has it represented for at least two years, consumer or community interests on banking services, credit needs, housing, or financial consumer protections?

Describe the consumer or community organization, including the length of time it has represented these interests:

I HEREBY CERTIFY that the information provided on this FHLBank Appointive Director Eligibility Certification Form and on any attachments hereto is true, correct, and complete to the best of my knowledge.

_____ _____
Signature Date

State of _____)
County of _____)

Signed and sworn to before me on this ____ day of _____.

_____
Signature of Notary Public

(Seal)

My commission expires: _____

Yes **No**

3. ____ ____ Are you currently representing and have you actively represented or been involved with for at least two years, consumer or community interests on banking services, credit needs, housing, or financial consumer protections?

Describe your experience, including the length of time you have represented these interests.

Yes **No**

4. ____ ____ Are you a director, officer, employee, or member of a consumer or community organization that operates in a state within the FHLBank district?

5. ____ ____ Is the consumer or community organization with which you are affiliated currently representing, and has it represented for at least two years, consumer or community interests on banking services, credit needs, housing, or financial consumer protections?

Describe the consumer or community organization, including the length of time it has represented these interests:

I HEREBY CERTIFY that the information provided on this FHLBank Appointive Director Eligibility Certification Form and on any attachments hereto is true, correct, and complete to the best of my knowledge.

_____ _____
Signature Date

State of _____)
County of _____)

Signed and sworn to before me on this ____ day of _____.

_____
Signature of Notary Public

(Seal)

My commission expires: _____

Federal Home Loan Bank System

Elective Director Eligibility Certification Form (E-1)

INSTRUCTIONS

If you need assistance in completing this form or have any questions, please contact (name, title, phone and fax numbers, e-mail address) at the Federal Home Loan Bank (FHLBank) of _____.

Please return this completed form and any attachments by the applicable deadline to (name and title), Federal Home Loan Bank of _____, (address).

Who Must File and When

FHLBank Elective Director Nominees

If you have been notified by your FHLBank that a member has nominated you to be a FHLBank elective director, and you want to accept the nomination, you must complete this form and return it to your FHLBank on or before the deadline established by the FHLBank. The time allowed includes the next business day if the date specified by the FHLBank occurs on a Saturday, Sunday, or federal holiday. Any nominee who does not submit this form to his or her FHLBank by the deadline will be deemed to have declined the nomination.

Current FHLBank Elective Directors

On or before March 1 of each year during your term of office as a FHLBank elective director, other than the calendar year in which you were elected, you must complete this form and return it to your FHLBank to update, if necessary, the information previously provided concerning continued compliance with the eligibility requirements for elective directors. If you do not submit this form by the March 1 deadline, the FHLBank may declare the elective directorship you fill to be vacant and you will no longer be eligible to serve as a FHLBank director. The time allowed includes the next business day if March 1 occurs on a Saturday, Sunday, or federal holiday.

Individuals Selected to Fill a Vacancy

If you have been selected by your FHLBank to fill the unexpired term of office of a vacant FHLBank elective directorship, you must complete this form and return it to your FHLBank on or before the deadline established by the FHLBank. The time allowed includes the next business day if the date specified by the FHLBank occurs on a Saturday, Sunday, or federal holiday.

Part I -- General Information

Your FHLBank will use the information you provide in Part I to ensure that its records are as up-to-date and accurate as possible.

Section A -- Certification

If no changes have occurred since the last time you completed Part I, you may complete Part I by signing the certification.

Section B -- Questions

If you have never completed, or if changes have occurred since the last time you completed, Part I, you must provide answers to each of the questions.

1. Please place your initials on the line that applies to you. You may check only one line. For example, if you are currently serving as a FHLBank elective director and are filing the required annual update, place your initials on the line marked "I am a FHLBank elective director."

2. Please print or type your full name.

3. Please list the name of each organization with which you are currently employed whether you work full- or part-time or are paid for your work, your title or position at that organization, the telephone and fax numbers where you can be reached, your electronic mail address, if any, the organization's street address, and, if different, the organization's mailing address. You may attach additional sheets if necessary.

4. For each directorship you currently hold, please list the name of the organization and the city or county and state in which the organization it is located. You may attach additional sheets if necessary.

Part II -- Eligibility Requirements

Your FHLBank will use the information you provide in Part II to determine whether you meet, or continue to meet, the statutory and regulatory eligibility requirements for FHLBank elective directors. See 12 U.S.C. § 1427; 12 C.F.R. § 932.7. Only individuals who satisfy these requirements may run for an elective directorship or serve as an elective director.

Section A -- Certification

If no changes have occurred since the last time you completed Part II, you may complete Part II by signing the certification.

Section B -- Questions

If you have never completed, or if changes have occurred since the last time you completed, Part II, you must provide answers to each of the questions.

1. Section 1427(a) of the Federal Home Loan Bank Act (Bank Act) and the Federal Housing Finance Board (Finance Board) regulation concerning FHLBank elective director eligibility require each elective director to be a United States citizen. See 12 U.S.C. § 1427(a); 12 C.F.R. § 932.7(b)(1). Please place your initials in the appropriate column.

2. Section 1427(a) of the Bank Act and the Finance Board regulation concerning FHLBank elective director eligibility require each elective director to be a bona fide resident of a state within the FHLBank district served or to be served by the director. See 12 U.S.C. § 1427(a); 12 C.F.R. § 932.7(b)(2). Please place your initials in the appropriate column. You will be deemed a bona fide resident of a FHLBank district under two circumstances. First, you will be deemed a bona fide resident if you maintain a principal place of residence in a state within the FHLBank district. To claim a location as your principal place of residence generally requires both physical presence and intent to remain or to return after an absence. Your

principal place of residence usually is the same as the permanent residence reported to the Internal Revenue Service. Please list that address. Second, you will be deemed a bona fide resident if you own or lease in your own name a residence in a state, and are a director or officer of a member within a voting state located in, within the FHLBank district. A member's "voting state" is the state where its principal place of business is located. See 12 C.F.R. § 932.1(f). The second basis for a finding of bona fide residence requires "residence plus," that is, simple residence and an employment nexus, rather than residence with domiciliary intent. Please list the address of every other residence you either own or lease in your own name, including vacation homes or homes you use seasonally or on a part-time basis, and the location of the principal place of business of each FHLBank member you serve as an officer or director. You may attach additional sheets if necessary.

3. Section 1427(b) of the Bank Act and the Finance Board regulation concerning FHLBank elective director eligibility require each elective director to be either an officer or a director of a member located in a state within the FHLBank district served or to be served by the director. See 12 U.S.C. § 1427(b); 12 C.F.R. § 932.7(b)(3). Please place your initials in the appropriate column. The member you serve as an officer or director will be deemed within the FHLBank district if the member's principal place of business, as determined by your FHLBank in accordance with the Finance Board's membership regulation, is located in a state that is part of the district. See 12 C.F.R. § 933.18.

4. Section 1427(b) of the Bank Act and the Finance Board regulation concerning FHLBank elective director eligibility requires every member an elective director serves as an officer or director to meet all minimum capital requirements of its appropriate federal regulator or, if applicable, appropriate state regulator. See 12 U.S.C. § 1427(b); 12 C.F.R. § 932.7(b)(3). Please place your initials in the appropriate column. For each FHLBank member you serve as an officer or a director that is subject to regulation by a federal regulator, other than credit unions or insurance companies, please provide the name of its appropriate federal regulator, its actual regulatory capital ratios as of the most recent quarter end, and the minimum regulatory capital requirements of the federal regulator. A member's appropriate federal regulator generally is its primary federal regulator. See 12 C.F.R. § 932.7(b)(3). For each credit union FHLBank member you serve as an officer or a director, please provide the name of its appropriate regulator, its actual regulatory reserves as of the most recent quarter end, the minimum regulatory reserve requirement of its regulator, and the National Credit Union Administration's regulatory reserve requirement if it was required to transfer funds as of the most recent quarter end. For each insurance company FHLBank member you serve as an officer or director, please provide the name of its appropriate regulator, the regulatory capital ratios contained in its most recent regulatory financial report, and the minimum statutory and regulatory requirements and the capital standards established by the National Association of Insurance Commissioners. For each FHLBank member you serve as an officer or a director that is not subject to regulation by a federal regulator, please provide the name and the minimum regulatory capital requirements of the member's appropriate state regulator. Generally, an appropriate state regulator is any state officer, agency, supervisor, or other entity that has regulatory authority over, or is empowered to institute enforcement action against it. See 12 C.F.R. § 932.7(b)(3). For instance, if you are an officer or director of a state-chartered financial institution insured by the Federal Deposit Insurance Corporation (FDIC), you should provide information concerning the FDIC's capital requirements even though the institution may be subject to regulation by a state. Similarly, if you are on officer or director of an institution subject only to state regulation, please provide information concerning the appropriate state regulatory capital requirements. You may attach additional sheets if necessary.

5. The Finance Board regulation concerning FHLBank elective director eligibility prohibits an incumbent elective director from running for an open elective directorship unless the director's term of office expires before the new term of office would begin. See 12 C.F.R. § 932.7(c)(1)(i). Please place your initials in the appropriate column.

6. Section 1427(d) of the Bank Act and the Finance Board regulation concerning FHLBank elective director eligibility prohibit an individual from running for an elective directorship if he or she has been

elected to, has served for all or part of each, and is currently serving in the third of, three consecutive terms of office as an elective director. See 12 U.S.C. § 1427(d); 12 C.F.R. § 932.7(c)(1)(ii). Please place your initials in the appropriate column.

7. The Finance Board regulation concerning FHLBank elective director eligibility prohibits an incumbent FHLBank appointive director from running for an open elective directorship.. See 12 C.F.R. § 932.7(c)(3). Please place your initials in the appropriate column.

Federal Home Loan Bank System

Elective Director Eligibility Certification Form

The reporting period is January 1, 19___ through December 31, 19___.

PART I
GENERAL INFORMATION

Section A -- Certification

I hereby certify that no changes have occurred since I last completed and submitted to my FHLBank Part I of the FHLBank Elective Director Eligibility Certification Form.

_____ _____
Signature Date

Section B -- Questions

1. Place your initials on the appropriate line:

_____ I am a FHLBank elective director nominee

_____ I am currently a FHLBank elective director

_____ I have been selected to fill a vacant FHLBank elective directorship

2. Print or type your full name:

_____

3. List your current employment:

_____ _____
Name of organization Your title or position

_____ _____ _____
Telephone number Fax number E-mail address

_____ _____ _____ _____
Street City or county State Zip code

Mailing address (if different) street	City or county	State	Zip code

Name of organization	Your title or position

Telephone number	Fax number	E-mail address

Street	City or county	State	Zip code
Mailing address (if different) street	City or county	State	Zip code

4. List all current directorships:

Name of Organization	Address (city or county and state)

PART II
ELIGIBILITY REQUIREMENTS

Section A -- Certification

I hereby certify that no changes have occurred since I last completed and submitted to my FHLBank Part II of the FHLBank Elective Director Eligibility Certification Form.

_____ _____
Signature Date

Section B -- Questions

For each question, place your initials in the appropriate column.

	Yes	No	
1.	____	____	Are you a citizen of the United States?

	Yes	No	
2.	____	____	Are you a bona fide resident of a state within the FHLBank district?

Provide the address of your permanent residence:

Street	City or county	State	Zip code

Provide the address of every other residences you either own or lease in your own name:

Street	City or county	State	Zip code

Provide the location of the principal place of business of each FHLBank member you serve as an officer or a director:

Name of member	City or county	State	Your title or position

_____	_____	_____	_____
Name of member	City or county	State	Your title or position

	Yes	No	
3.	____	____	Are you an officer or director of a member located in a state within the FHLBank district?
4.	____	____	Are you an officer or director of a member that meets all applicable minimum capital requirements of its appropriate federal or state regulator?

A. ***For each FHLBank member other than credit unions and insurance companies*** you serve as an officer or director, provide the following information as of the most recent quarter end:

Name of member's appropriate regulator: _____

Member's actual regulatory capital ratios as of _____ quarter/year		Minimum regulatory capital requirements
_____	% Total Risk-based Capital	_____
_____	% Tier 1 (Core) Risk-based Capital	_____
_____	% Leverage Capital (non-OTS regulated members only)	_____
_____	% Tangible Capital (OTS regulated members only)	_____

B. ***For each credit union FHLBank member*** you serve as an officer or director, provide the following information as of the most recent quarter end:

Name of member's appropriate regulator: _____

Member's actual regulatory reserves as of _____ quarter/year		Minimum regulatory capital requirements
_____	% Statutory Reserves* / Risk Assets	_____

* Statutory Reserves include the total of the Regular Reserve, the Allowance for Loan Losses Account, and the Allowance for Investment Losses Account.

Provide the following information if the member was required to transfer funds under the National Credit Union Administration's regulatory reserve requirements as of the date noted above:

$_____ Gross Income _____ % Transfer Percent Required

$_____ Actual Transfer Amount _____ Date of Transfer

C. ***For each insurance company FHLBank member*** you serve as an officer or director, provide the following information as of its most recent report:

Name of member's appropriate regulator: _____

The member's actual regulatory capital ratios contained in its most recent regulatory financial report filed with its appropriate regulator:

The minimum statutory and regulatory requirements and the capital standards established by the National Association of Insurance Commissioners:

	Yes	No	
5.	____	____	Are you currently serving as an elective FHLBank director?
	____	____	If yes, does the term of office of your directorship expire on or before the last day of the calendar year in which the election is being held?
6.	____	____	Are you currently serving in the third of three terms of office as an elective FHLBank director?
	Yes	**No**	
7.	____	____	Are you currently serving as an appointive FHLBank director?

I HEREBY CERTIFY that the information provided on this FHLBank Elective Director Eligibility Certification Form and on any attachments is true, correct, and complete to the best of my knowledge.

_____ _____
Signature Date

State of _____)
County of _____)

Signed and sworn to before me on this ____ day of _____.

_____
Signature of Notary Public

(Seal)

My commission expires: _____

By the Board of Directors of the Federal Housing Finance Board.

Dated: March 25, 1998.

Bruce A. Morrison,

Chairperson.

[FR Doc. 98–12651 Filed 5–12–98; 8:45 am]

BILLING CODE 6725–01–C

DEPARTMENT OF THE TREASURY

Fiscal Service

31 CFR Part 208

Management of Agency Disbursements

AGENCY: Financial Management Service, Fiscal Service, Treasury.

ACTION: Notice of public meetings.

SUMMARY: On September 16, 1997, the Department of the Treasury (''Treasury'') published a Notice of Proposed Rulemaking in which Treasury proposed making available to Federal payment recipients an account to access their Federal payments. The account, commonly referred to as the Electronic Transfer Account or ''ETA SM,'' will be offered through a Federally-insured financial institution and will be available at a reasonable cost and with the same consumer protections afforded other account holders at the same financial institution. Treasury is hosting two meetings, open to the public, to discuss the advantages and disadvantages of two approaches to offering this account. One meeting will be for the purpose of obtaining comments from representatives of community-based and consumer organizations; the other meeting will be for the purpose of obtaining comments from representatives of financial institutions.

DATES: May 21, 1998. 9:30 a.m. to 11:30 a.m. (community-based and consumer organization meeting); 2:00 p.m. to 4:00 p.m. (financial institution meeting).

ADDRESSES: Marriott Hotel at Metro Center, 775 12th Street, NW., Washington, DC.

FOR FURTHER INFORMATION CONTACT: Persons wishing to attend and observe either meeting are requested to contact Martha Thomas-Mitchell at (202) 874–6757 or Diana Shevlin at (202) 874–7032, or send an Internet e-mail to Martha.Thomas-Mitchell@fms.sprint.com or Diana.Shevlin@fms.sprint.com, by 12:00 noon Eastern time on May 19, 1998, to make arrangements for attendance. Seating will be available on a first come, first served basis.

SUPPLEMENTARY INFORMATION: On September 16, 1997, Treasury issued a Notice of Proposed Rulemaking (62 FR 48714) (''208 NPRM'') implementing the electronic payment requirement of the Debt Collection Improvement Act of 1996 (the ''Act''). The Act requires that, subject to the authority of the Secretary of the Treasury to grant waivers, all Federal payments (other than payments under the Internal Revenue Code of 1986) made after January 1, 1999, must be made by electronic funds transfer (''EFT''). The Act further requires that Treasury ensure that individuals who are required to have an account because of the EFT mandate have access to an account at a financial institution at a reasonable cost and with the same consumer protections afforded other account holders at the same financial institution. In the 208 NPRM, Treasury proposed that such an account would be provided by one or more financial institutions designated as Treasury's Financial Agents for the provision of these accounts.

In addition to reviewing comments received on the 208 NPRM and its own analysis of alternative approaches to offering the account, Treasury will hold two meetings, both of which will include a discussion of two alternative approaches to providing the ETA SM. One meeting will focus on comments from community-based and consumer organizations. The other meeting will focus on comments from financial institutions.

Treasury has invited certain commenters and other interested parties to take part in the meetings. These participants will comment on questions posed by the Treasury and take part in a discussion. Members of the public are invited to observe.

After these meetings, Treasury intends to publish a notice in the **Federal Register** describing proposed features of ETA SM. As indicated in the 208 NPRM, this notice will be published for public comment.

Possible Approaches

Treasury is currently considering two approaches to offering the ETA SM to recipients through financial institutions. The first approach would involve selecting a small number of financial institutions to Act as Treasury's Financial Agents in providing ETAs SM within certain geographic areas. Financial Agents would be selected on a competitive basis through an Invitation for Expressions of Interest. Terms and conditions for providing the accounts, including account attributes, would be stipulated contractually in financial agency agreements with the selected financial institutions. The account would be electronically accessed by debit cards issued by the Financial Agent. These Financial Agents would work to sign-up local financial institutions who would market and originate ETAs SM in their communities. The cost to the recipient to access funds would be determined by the market as a result of the competitive process.

Under the second approach, Treasury would publish standards for providing the ETA SM, including account attributes, and would allow any Federally-insured financial institution to provide the ETA SM in accordance with these standards. Treasury would monitor and make available to the public a list of financial institutions offering the ETA SM. Under this approach, a financial institution would have the option of offering recipients either electronic access to their accounts or over-the-counter transactions or both. Treasury would establish a price cap for fees imposed on recipients to access their funds.

Questions

Treasury is interested in responses to the following questions:

(1) Which approach will most likely provide recipients with convenient local access at a low cost?

(2) Which approach will make an ETA SM available to the largest number of recipients?

Dated: May 8, 1998.

Richard L. Gregg,

Commissioner.

[FR Doc. 98–12691 Filed 5–12–98; 8:45 am]

BILLING CODE 4810–35–M

ENVIRONMENTAL PROTECTION AGENCY

40 CFR Part 52

[NH31–1–7160b; FRL–6010–6]

Approval and Promulgation of Air Quality Implementation Plans; Reasonably Available Control Technology for Nitrogen Oxides for the State of New Hampshire

AGENCY: Environmental Protection Agency (EPA).

ACTION: Proposed rule.

SUMMARY: EPA is proposing to approve a State Implementation Plan (SIP) revision submitted by the State of New Hampshire. This revision establishes and requires Reasonably Available Control Technology (RACT) at three stationary sources of nitrogen oxides (NO_X). In the Final Rules Section of this **Federal Register**, EPA is approving the State's SIP revision as a direct final rule without prior proposal because the Agency views this amendment as a noncontroversial revision and anticipates no adverse comments. A detailed rationale for the approval is set forth in the direct final rule. If no relevant adverse comments are received in response to the direct final rule, no

further activity is contemplated in relation to this proposed rule. If EPA receives relevant adverse comments, the direct final rule will be withdrawn and all public comments received will be addressed in a subsequent final rule based on this proposed rule. EPA will not institute a second comment period on this proposal. Any parties interested in commenting on this proposal should do so at this time.

DATES: Comments must be received on or before June 12, 1998.

ADDRESSES: Comments may be mailed to Susan Studlien, Deputy Director, Office of Ecosystem Protection (mail code CAA), U.S. Environmental Protection Agency, Region I, JFK Federal Bldg., Boston, MA 02203. Copies of the State submittal and EPA's technical support document are available for public inspection during normal business hours, by appointment, at the Office of Ecosystem Protection, U.S. Environmental Protection Agency, Region I, One Congress Street, 11th floor, Boston, MA; and the Air Resources Division, New Hampshire Department of Environmental Services, 64 North Main Street, Caller Box 2033, Concord, NH 03302–2033.

FOR FURTHER INFORMATION CONTACT: Steven A. Rapp, Environmental Engineer, Air Quality Planning Unit (CAQ), U.S. EPA, Region I, JFK Federal Building, Boston, MA 02203–2211; (617) 565–2773; Rapp.Steve@EPAMAIL.EPA.GOV.

SUPPLEMENTARY INFORMATION: For additional information, see the direct final rule which is located in the Rules Section of this **Federal Register**.

Authority: 42 U.S.C. 7401 *et seq.*

Dated: April 21, 1998.

John P. DeVillars,

Regional Administrator, Region I.

[FR Doc. 98–12715 Filed 5–12–98; 8:45 am]

BILLING CODE 6560–50–P

ENVIRONMENTAL PROTECTION AGENCY

40 CFR Part 52

[OR66–7281a; FRL–6006–9]

Approval and Promulgation of State Implementation Plans: Oregon

AGENCY: Environmental Protection Agency (EPA).

ACTION: Proposed rule.

SUMMARY: The EPA proposes to approve Oregon Department of Environmental Quality's (ODEQ) new sections to Division 30 as submitted on June 1, 1995, and the revisions to Divisions 20, 21, 22, 25, and 30, as submitted on January 22, 1997, of their State Implementation Plan (SIP). In the Final Rules Section of this **Federal Register**, the EPA is approving the State's SIP revision as a direct final rule without prior proposal because the Agency views this as a noncontroversial revision amendment and anticipates no adverse comments. A detailed rationale for the approval is set forth in the direct final rule. If no adverse comments are received in response to this proposed rule, no further activity is contemplated in relation to this rule. If the EPA receives adverse comments, the direct final rule will be withdrawn and all public comments received will be addressed in a subsequent final rule based on this proposed rule. The EPA will not institute a second comment period on this action.

DATES: Comments on this proposed rule must be received in writing by June 12, 1998.

ADDRESSES: Written comments should be addressed to Montel Livingston, Environmental Protection Specialist (OAQ–107), Office of Air Quality, at the EPA Regional Office listed below. Copies of the documents relevant to this proposed rule are available for public inspection during normal business hours at the following locations. The interested persons wanting to examine these documents should make an appointment with the appropriate office at least 24 hours before the visiting day. EPA, Region 10, Office of Air Quality, 1200 6th Avenue, Seattle, WA 98101 and ODEQ, 811 S.W. Sixth Avenue, Portland, OR 97204.

FOR FURTHER INFORMATION CONTACT: Catherine Woo, Office of Air Quality, EPA, 1200 6th Avenue, Seattle, WA 98101, (206) 553–1814.

SUPPLEMENTARY INFORMATION: See the information provided in the Direct Final action which is located in the Rules Section of this **Federal Register**.

Dated: April 20, 1998.

Chuck Clarke,

Regional Administrator Region X.

[FR Doc. 98–12435 Filed 5–12–98; 8:45 am]

BILLING CODE 6560–50–P

ENVIRONMENTAL PROTECTION AGENCY

40 CFR Part 52

[Region II Docket No. NJ30–1–177, FRL–6013–3]

Approval and Promulgation of Implementation Plans; New Jersey; Motor Vehicle Inspection and Maintenance Program

AGENCY: Environmental Protection Agency (EPA).

ACTION: Proposed rule.

SUMMARY: The Environmental Protection Agency (EPA) is proposing approval of a State Implementation Plan (SIP) revision submitted by the State of New Jersey. This action is required because the revision changes one of the primary design considerations of the existing automobile inspection and maintenance (I/M) program. The intended effect of this action is to propose approving changes in the inspection frequency from annual to biennial and the addition of a gas cap inspection, which will result in a net increase in overall emissions reductions as previously approved by EPA.

DATES: Comments must be received on or before June 12, 1998.

ADDRESSES: All comments should be addressed to: Ronald J. Borsellino, Chief, Air Programs Branch, Environmental Protection Agency, Region II Office, 290 Broadway, New York, New York 10007–1866.

Copies of the State's submittal are available at the following addresses for inspection during normal business hours:

Environmental Protection Agency, Region II Office, Air Programs Branch, 290 Broadway, 25th Floor, New York, New York 10007–1866.

New Jersey Department of Environmental Protection, Office of Air Quality Management, Bureau of Air Quality Planning, 401 East State Street, CN418, Trenton, New Jersey 08625.

FOR FURTHER INFORMATION CONTACT: Richard Graciano, Air Programs Branch, Environmental Protection Agency, Region II Office, 290 Broadway, 25th Floor, New York, New York 10007–1866, (212) 637–4249

SUPPLEMENTARY INFORMATION:

Background

On February 26, 1998 New Jersey submitted a revision to its State Implementation Plan (SIP) changing the inspection frequency, from annual to biennial, of its existing automobile

inspection and maintenance (I/M) program, through the addition of a regulation found at N.J.A.C. 13:20–43.7. Prior to this proposal, neither the New Jersey rules nor statutes adequately addressed the testing frequency for the transitional phase of the program, during which New Jersey is converting its basic I/M program to the enhanced I/M program. New Jersey has had a basic I/M program in place since 1974. This program, in its current form, was subject to its most recent amendment on January 21, 1985, which was approved by EPA and incorporated into the SIP on September 17, 1992. 57 FR 42893. EPA conditionally approved New Jersey's enhanced I/M program on May 14, 1997. 62 FR 26405. On January 30, 1998, the State submitted performance standard modeling to EPA, fulfilling the remaining condition required by EPA in its approval notice.

Under provisions of sections 182, 184, and 187 of the Clean Air Act (Act), New Jersey is required to implement an enhanced I/M program throughout the entire State. In its July 10, 1995 and March 27, 1996 SIP submittals, the State indicated that the enhanced I/M program would require biennial inspections, and suggested that early implementation of biennial testing may be necessary to facilitate system upgrades.

In the February 26, 1998 request for a SIP revision, New Jersey indicated that during the transition period between the existing program and the new enhanced program, the State will require vehicles to be inspected biennially, rather than annually, to accommodate the decreased availability of centralized inspection lanes while they are being retrofitted for enhanced testing. The February 26, 1998 SIP revision states that, ''[t]he transition period will begin on the start date of the contract for the implementation of the enhanced I/M program and will end when the enhanced I/M program becomes mandatory.'' Pursuant to section 193 of the Act, such a change could not be approved if it results in increased emissions of volatile organic compounds (VOCs) and/or carbon monoxide (CO). In order to offset the increased VOC emissions, New Jersey is proposing early implementation of the test that checks the functional operation of vehicle gas caps. The gas cap checks will be implemented during the transition period from the existing program to the enhanced program rather than at the start of the enhanced program. New Jersey expects that this strategy will offset the increase in VOCs resulting from the conversion to biennial testing and has submitted modeling results that support this. New Jersey estimates that the resulting VOC emissions increase from changing the program frequency to biennial will be about 0.026 grams per mile. The VOC emissions reduction associated the functional gas cap test are estimated to be about 0.033 grams per mile, resulting in a net benefit of 0.007 grams per mile.

New Jersey also estimates that CO emissions will increase about 0.365 grams per mile as a result of the change in inspection frequency. In its revision package, the State notes that the carbon monoxide benefits gained through vehicle fleet turnover from January 1, 1996 through January 1, 1998 are about 0.745 grams per mile. However, EPA points out that this emission reduction is not a function of the SIP *per se*. EPA acknowledges that the most efficient means to achieve significant carbon monoxide reduction and ultimate attainment is through the speedy implementation of the State's enhanced I/M program. Specifically, EPA expects that the State's enhanced I/M implementation will result in excess carbon monoxide benefits beyond the required performance standard. These are approximately 0.526 grams per mile.

These air quality benefits cannot be achieved without accommodating the practical obstacles associated with retrofitting centralized test only stations, which include transitional biennial testing.

Since the State is currently in the process of awarding construction and/or operation contracts for its approved enhanced program, New Jersey has requested that EPA proceed with an expedited decision process for this revision to the existing program. Therefore, approval of this revision is being proposed under a procedure called parallel processing, whereby EPA proposes rulemaking action concurrently with the State's procedures for amending its regulations. If the State's proposed revision is substantially changed in areas other than those identified in this document, EPA will evaluate those changes and may publish another notice of proposed rulemaking. If no substantial changes are made other than those areas specified in this document, EPA will publish a final rulemaking on the revisions. Final rulemaking action by EPA will occur only after the SIP revision has been adopted by New Jersey and submitted formally to EPA for incorporation into the SIP. In addition, any action by the State resulting in undue delay in the contract award or selection process may result in a reproposal altering the approvability of the SIP.

Conclusion

EPA believes New Jersey has provided an adequate rationale for early conversion of the existing program from annual to biennial testing. Furthermore, EPA supports the calculations submitted by the State indicating that the emissions shortfalls resulting from this change will be sufficiently offset by the strategies proposed and by the benefits of enhanced I/M implementation. Since the State is reducing the testing frequency of its current program to facilitate the implementation of the enhanced I/M program, EPA's approval of this testing frequency conversion under the terms of this SIP revision only applies after the State awards the necessary construction contracts for its enhanced I/M program.

Nothing in this action should be construed as permitting or allowing or establishing a precedent for any future request for revision to any state implementation plan. Each request for revision to the state implementation plan shall be considered separately in light of specific technical, economic, and environmental factors and in relation to relevant statutory and regulatory requirements.

Administrative Requirements

Executive Order 12866

The Office of Management and Budget (OMB) has exempted this regulatory action from review under Executive Order 12866.

Regulatory Flexibility Act

Under the Regulatory Flexibility Act, 5 U.S.C. 600 *et seq.*, EPA must prepare a regulatory flexibility analysis assessing the impact of any proposed or final rule on small entities. 5 U.S.C. 603 and 604. Alternatively, EPA may certify that the rule will not have a significant impact on a substantial number of small entities. Small entities include small businesses, small not-for-profit enterprises, and government entities with jurisdiction over populations of less than 50,000.

SIP approvals under section 110 and subchapter I, part D of the Clean Air Act do not create any new requirements but simply approve requirements that the State is already imposing. Therefore, because the federal SIP approval does not impose any new requirements, I certify that it does not have a significant impact on any small entities affected. Moreover, due to the nature of the Federal-State relationship under the CAA, preparation of a flexibility analysis would constitute federal inquiry into the economic reasonableness of state action. The

Clean Air Act forbids EPA to base its actions concerning SIPs on such grounds. *Union Electric Co.* versus *U.S. EPA*, 427 U.S. 246, 255–66 (1976); 42 U.S.C. 7410(a)(2).

Unfunded Mandates

Under section 202 of the Unfunded Mandates Reform Act of 1995 (''Unfunded Mandates Act''), signed into law on March 22, 1995, EPA must prepare a budgetary impact statement to accompany any proposed or final rule that includes a federal mandate that may result in estimated costs to State, local, or tribal governments in the aggregate; or to private sector, of $100 million or more. Under section 205, EPA must select the most cost-effective and least burdensome alternative that achieves the objectives of the rule and is consistent with statutory requirements. Section 203 requires EPA to establish a plan for informing and advising any small governments that may be significantly or uniquely impacted by the rule.

EPA has determined that the approval action proposed does not include a federal mandate that may result in estimated costs of $100 million or more to either State, local, or tribal governments in the aggregate, or to the private sector. This federal action approves pre-existing requirements under State or local law, and imposes no new federal requirements. Accordingly, no additional costs to State, local, or tribal governments, or to the private sector, result from this action.

The Regional Administrator's decision to approve or disapprove the SIP revision will be based on whether it meets the requirements of section 110(a)(2)(A)–(K) of the Clean Air Act, as amended, and EPA regulations in 40 CFR Part 51.

The Congressional Review Act

The Congressional Review Act, 5 U.S.C. 801 *et seq.*, as added by the Small Business Regulatory Enforcement Fairness Act of 1996, generally provides that before a rule may take effect, the agency promulgating the rule must submit a rule report, which includes a copy of the rule, to each House of the Congress and to the Comptroller General of the United States. EPA will submit a report containing this rule and other required information to the U.S. Senate, the U.S. House of Representatives, and the Comptroller General of the United States prior to publication of the rule in the **Federal Register**. This rule is not a ''major rule'' as defined by 5 U.S.C. 804(2).

List of Subjects in 40 CFR Part 52

Environmental protection, Air pollution control, Carbon monoxide, Hydrocarbons, Intergovernmental relations, Ozone, Volatile organic compounds.

Authority: 42 U.S.C. 7401–7671q.

Dated: April 30, 1998.

William J. Muszynski,

Deputy Regional Administrator.

[FR Doc. 98–12720 Filed 5–12–98; 8:45 am]

BILLING CODE 6560–50–U

ENVIRONMENTAL PROTECTION AGENCY

40 CFR Part 52

[MD067–3025b; FRL–6012–6]

Approval and Promulgation of Air Quality Implementation Plans; Maryland; Definition of the Term ''Major Stationary Source of VOC''

AGENCY: Environmental Protection Agency (EPA).

ACTION: Proposed rule.

SUMMARY: EPA proposes to approve the State Implementation Plan (SIP) revision submitted by the State of Maryland. This revision pertain to amendments to Maryland's definition of the term major stationary source of volatile organic compounds (VOC). In the Final Rules section of this **Federal Register**, EPA is approving the State's SIP revision as a direct final rule without prior proposal because the Agency views this as a noncontroversial SIP revision and anticipates no adverse comments. A detailed rationale for the approval is set forth in the direct final rule. If no adverse comments are received in response to this proposed rule, no further activity is contemplated in relation to this rule. If EPA receives adverse comments, the direct final rule will be withdrawn and all public comments received will be addressed in a subsequent final rule based on this proposed rule. EPA will not institute a second comment period on this action. Any parties interested in commenting on this action should do so at this time.

DATES: Comments must be received in writing by June 12, 1998.

ADDRESSES: Comments may be mailed to David L. Arnold, Chief, Ozone and Mobile Sources Section, Mailcode 3AP21, U.S. Environmental Protection Agency, Region III, 841 Chestnut Building, Philadelphia, Pennsylvania 19107. Copies of the documents relevant to this action are available for public inspection during normal business hours at the Air Protection Division, U.S. Environmental Protection Agency, Region III, 841 Chestnut Building, Philadelphia, Pennsylvania 19107 and the Maryland Department of the Environment, 2500 Broening Highway, Baltimore, Maryland, 21224.

FOR FURTHER INFORMATION CONTACT: Maria A. Pino, (215) 566–2181, at the EPA Region III address above, or via e-mail at pino.maria@epamail.epa.gov. While information may be requested via e-mail, any comments must be submitted in writing to the EPA Region III address above.

SUPPLEMENTARY INFORMATION: See the information provided in the Direct Final action of the same title, pertaining to revisions to Maryland's definition of the term ''major stationary source of VOC,'' which is located in the Rules and Regulations Section of this **Federal Register**.

Authority: 42 U.S.C. 7401 et seq.

Dated: April 24, 1998.

Thomas Voltaggio,

Acting Regional Administrator, Region III.

[FR Doc. 98–12717 Filed 5–12–98; 8:45 am]

BILLING CODE 6560–50–P

ENVIRONMENTAL PROTECTION AGENCY

40 CFR Part 63

[FRL–6012–2]

Approval of Section 112(l) Authority for Hazardous Air Pollutants; Perchloroethylene Air Emission Standards for Dry Cleaning Facilities; State of California; South Coast Air Quality Management District

AGENCY: Environmental Protection Agency (EPA).

ACTION: Proposed rule.

SUMMARY: Pursuant to section 112(l) of the Clean Air Act (CAA) and through the California Air Resources Board, South Coast Air Quality Management District (SCAQMD) requested approval to implement and enforce its ''Rule 1421: Control of Perchloroethylene Emissions from Dry Cleaning Systems'' (Rule 1421) in place of the ''National Perchloroethylene Air Emission Standards for Dry Cleaning Facilities'' (dry cleaning NESHAP) for area sources under SCAQMD's jurisdiction. In the Rules section of this **Federal Register**, EPA is granting SCAQMD the authority to implement and enforce Rule 1421 in place of the dry cleaning NESHAP for area sources under SCAQMD's jurisdiction as a direct final rule without prior proposal because the Agency views this as a noncontroversial action

and anticipates no adverse comments. A detailed rationale for this approval is set forth in the direct final rule. If no relevant adverse comments are received in response to this document, no further activity is contemplated in relation to this proposed rule. If EPA receives relevant adverse comments, the direct final rule will not take effect and all public comments received will be addressed in a subsequent final rule based on this proposed rule. The EPA will not institute a second comment period on this proposal. Any parties interested in commenting on this proposal should do so at this time.

DATES: Comments on this proposed rule must be received in writing by June 12, 1998.

ADDRESSES: Written comments on this action should be addressed to: Andrew Steckel, Rulemaking Office (AIR–4), Air Division, U.S. Environmental Protection Agency, Region IX, 75 Hawthorne Street, San Francisco, CA 94105–3901.

Copies of the submitted request are available for public inspection at EPA's Region IX office during normal business hours.

FOR FURTHER INFORMATION CONTACT: Mae Wang, Rulemaking Office (AIR–4), Air Division, U.S. Environmental Protection Agency, Region IX, 75 Hawthorne Street, San Francisco, CA 94105–3901, Telephone: (415) 744–1200.

SUPPLEMENTARY INFORMATION: This document concerns SCAQMD Rule 1421, Control of Perchloroethylene Emissions from Dry Cleaning Systems, revised on June 13, 1997. For further information, please see the information provided in the direct final action which is located in the Rules section of this **Federal Register**.

Authority: This action is issued under the authority of Section 112 of the Clean Air Act, as amended, 42 U.S.C., Section 7412.

Dated: April 10, 1998.

Felicia Marcus,

Regional Administrator, Region IX.

[FR Doc. 98–12429 Filed 5–12–98; 8:45 am]

BILLING CODE 6560–50–P

ENVIRONMENTAL PROTECTION AGENCY

40 CFR Part 131

[FRL–OW–6013–4]

RIN–2040–AC65

Water Quality Standards for Alabama

AGENCY: Environmental Protection Agency.

ACTION: Proposed Rule; Re-opening of public comment period.

SUMMARY: EPA is re-opening the public comment period on the proposed water quality standards that would be applicable to certain waters of the United States in the State of Alabama.

DATES: EPA will now accept public comments on this proposed rulemaking until June 3, 1998. Comments postmarked after this date may not be considered.

ADDRESSES: An original plus 2 copies, and if possible an electronic version of comments either in WordPerfect or ASCII format, should be addressed to Fritz Wagener, Water Quality Standards Coordinator, U.S. EPA Region 4, Water Management Division, Atlanta Federal Center, 61 Forsyth Street S.W., Atlanta, Georgia, 30303–3104. The administrative record for this proposed rule is available for public inspection at U.S. EPA Region 4, Water Management Division, 15th Floor, Atlanta Federal Center, 61 Forsyth Street S.W., Atlanta, Georgia, 30303–3104, between 8:00 a.m. to 4:30 p.m. Copies of all or portions of the record will be made available for a charge of 20 cents per page.

FOR FURTHER INFORMATION CONTACT: Fritz Wagener, Water Quality Standards Coordinator, U.S. EPA Region 4, Water Management Division, Atlanta Federal Center, 61 Forsyth Street S.W., Atlanta, Georgia, 30303–3104 (telephone: 404–562–9267).

SUPPLEMENTARY INFORMATION: This proposed rule appeared in the **Federal Register** on March 5, 1998 (63 FR 10799) and provided for a public comment period of 60 days which closed on May 4, 1998. EPA has received requests from several interested parties for additional time to comment. These parties cited difficulty in obtaining and reviewing certain documents referenced in the administrative record within the comment period provided by EPA.

Dated: May 7, 1998.

Robert Perciasepe,

Assistant Administrator for Water.

[FR Doc. 98–12690 Filed 5–12–98; 8:45 am]

BILLING CODE 6560–50–P

DEPARTMENT OF HEALTH AND HUMAN SERVICES

Health Care Financing Administration

42 CFR Parts 405, 412, and 413

[HCFA–1003–CN]

RIN 0938–AI22

Medicare Program; Changes to the Hospital Inpatient Prospective Payment Systems and Fiscal Year 1999 Rates; Corrections

AGENCY: Health Care Financing Administration (HCFA), HHS.

ACTION: Proposed rule; correction.

SUMMARY: In the May 8, 1998 issue of the **Federal Register** (63 FR 25575), we published a proposed rule to revise the Medicare hospital inpatient prospective payment systems for operating costs and capital-related costs to implement necessary changes arising from our continuing experience with the system. This document corrects technical errors made in that document.

FOR FURTHER INFORMATION CONTACT:

Nancy Edwards, (410) 786–4531, Operating Prospective Payment, DRG, and Wage Index Issues.

Tzvi Hefter, (410) 786–4487, Capital Prospective Payment, Excluded Hospitals, and Graduate Medical Education Issues.

SUPPLEMENTARY INFORMATION: In the May 8, 1998 proposed rule, we addressed caps on the target amounts for cost reporting periods beginning in FY 1999 for hospitals excluded from the hospital inpatient prospective payment systems. The caps that we published inadvertently reflect updates to the amounts published in the August 29, 1997 final rule with comment period (62 FR 46019), rather than updates to the corrected amounts published in the March 6, 1998 correction notice for the final rule with comment period (63 FR 11148). This document corrects that error. Also incorrect amounts were listed in Tables 1A, 1C, 1D, 1E, and 1F. We inadvertently published the amounts from the August 29, 1997 final rule with comment period. Therefore, we are making the following corrections to the proposed rule:

1. On page 25601, end of the third column, the table is replaced with the following:

(1) Psychiatric hospitals and units: $10,797

(2) Rehabilitation hospitals and units: $19,582

(3) Long-term care hospitals: $38,630

2. On pages 25620 through 26521, Tables 1A, 1C, 1D, 1E, and 1F are corrected to read as follows:

TABLE 1A.—NATIONAL ADJUSTED OPERATING STANDARDIZED AMOUNTS, LABOR/NONLABOR

Large urban areas		Other areas	
Labor-related	Nonlabor-related	Labor-related	Nonlabor-related
2,791.45	1,134.64	2,747.26	1,116.68

TABLE 1C.—ADJUSTED OPERATING STANDARDIZED AMOUNTS FOR PUERTO RICO, LABOR/NONLABOR

	Large urban areas		Other areas	
	Labor	Nonlabor	Labor	Nonlabor
National	2,767.78	1,125.02	2,767.78	1,125.02
Puerto Rico	1,331.29	535.88	1,310.21	527.40

TABLE 1D.—CAPITAL STANDARD FEDERAL PAYMENT RATE

	Rate
National	377.25
Puerto Rico	180.73

TABLE 1E.—NATIONAL ADJUSTED OPERATING STANDARDIZED AMOUNTS FOR "TEMPORARY RELIEF" HOSPITALS, LABOR/NONLABOR

Large urban areas		Other areas	
Labor-related	Nonlabor-related	Labor-related	Nonlabor-related
2,799.77	1,138.02	2,755.44	1,120.01

TABLE 1F.—ADJUSTED OPERATING STANDARDIZED AMOUNTS FOR "TEMPORARY RELIEF" HOSPITALS IN PUERTO RICO, LABOR/NONLABOR

	Large urban areas		Other areas	
	Labor	Nonlabor	Labor	Nonlabor
National	2,776.03	1,128.37	2,776.03	1,128.37
Puerto Rico	1,335.26	537.48	1,314.11	528.97

(Catalog of Federal Domestic Assistance Program No. 93.778, Medical Assistance Program; No. 93.773 Medicare—Hospital Insurance; and No. 93.774, Medicare—Supplementary Medical Insurance)

Dated: May 8, 1998.

Neil J. Stillman,

Deputy Assistant Secretary for Information Resource Management.

[FR Doc. 98–12805 Filed 5–8–98; 4:26 pm]

BILLING CODE 4120–01–P

DEPARTMENT OF TRANSPORTATION

Coast Guard

46 CFR Parts 1 and 10

[USCG–1998–3824]

RIN 2115–AF58

Maritime Course Approval Procedures

AGENCY: Coast Guard, DOT.

ACTION: Notice of proposed rulemaking.

SUMMARY: The Coast Guard proposes to revise the regulations which govern Maritime Course Approval Procedures, by streamlining the process by which courses are submitted to and reviewed by the Coast Guard. We also propose to add a mechanism to allow us to suspend or revoke approvals for courses. Although the regulations govern training schools with approved courses, only a methodology for course approval is provided. Revising the regulations to include a mechanism for withdrawal of approval will motivate schools to maintain a uniformly high standard, improve compliance with course approval regulations, and ultimately promote public safety.

DATES: Comments must reach the Docket Management Facility on or before July 13, 1998.

ADDRESSES: You may mail comments to the Docket Management Facility, (USCG–1998–3824), U.S. Department of Transportation, room PL–401, 400 Seventh Street SW., Washington, DC 20590–0001, or deliver them to room PL–401, located on the Plaza Level of the Nassif Building at the same address between 10 a.m. and 5 p.m., Monday through Friday, except Federal holidays. The telephone number is 202–366–9329.

The Docket Management Facility maintains the public docket for this rulemaking. Comments will become part of this docket and will be available for inspection or copying at room PL–401, located on the Plaza Level of the Nassif Building at the same address between 10 a.m. and 5 p.m., Monday through Friday, except Federal holidays. You may also access this docket on the Internet at http://dms.dot.gov.

FOR FURTHER INFORMATION CONTACT: For questions about the docket, contact Ms. Paulette Twine, Chief, Documentary Services Division, Department of

Transportation, telephone 202–366–9329. For questions about this notice, contact Gerald Miante, Project Manager, National Maritime Center (NMC), 703–235–0018.

SUPPLEMENTARY INFORMATION:

Request for Comments

The Coast Guard encourages you to submit written data, views, or arguments. If you submit comments, you should include your name and address, identify this notice (USCG–1998–3824) and the specific section or question in this document to which your comments apply, and give the reason for each comment. Please submit one copy of all comments and attachments in an unbound format, no larger than 8½ by 11 inches, suitable for copying and electronic filing to the DOT Docket Management Facility at the address under **ADDRESSES.** If you want us to acknowledge receiving your comments, please enclose a stamped, self-addressed postcard or envelope.

The Coast Guard will consider all comments received during the comment period.

The Coast Guard plans no public meeting. You may request a public meeting by submitting a request to the address under **ADDRESSES**. The request should include the reasons why a meeting would be beneficial. If the Coast Guard determines that a public meeting should be held, it will hold the meeting at a time and place announced by a later notice in the **Federal Register.**

Background and Purpose

Regulations for merchant mariner course approvals have been in place for several years and are found in 46 CFR part 10. Courses were first approved for education mandated by regulation such as radar observer, fire-fighting, and first aid. Courses were then approved for formal training instead of required sea service for both renewal and raise in grade of license or an endorsement, and to substitute for a Coast Guard examination.

With the publication of a Focus Group Study, *Licensing 2000 and Beyond* in 1993, the Coast Guard began approving courses to substitute for certain modules of examination, especially for lower level licenses. Now, with the implementation of the 1995 Amendments to the International Convention on Standards of Training, Certification and Watchkeeping for Seafarers, 1978 (STCW) of the International Maritime Organization (IMO), requirements for basic entry-level education, structured shipboard training programs, and specific assessment protocols, the course approval burden has increased considerably.

Presently, the Coast Guard has approved in excess of 500 courses presented by over 200 schools and the number is growing weekly. As part of a Quality Standard System (QSS), Coast Guard Regional Examination Centers (RECs) are charged with oversight of these widespread training institutions.

The majority of schools consistently operate according to the regulations governing course approvals. There are times, however, when audits of a particular school show evidence of infractions ranging from incomplete recordkeeping to major deficiencies dealing with examination tampering, operating outside the conditions of the course approval, and outright misrepresentation of course material. Some primary reasons for suspending or revoking a course approval would include (but are not limited to):

- Failure to comply with the provisions of the course approval.
- Failure to comply with the provisions of parts 10, 12, 13 or 15 of Title 46, Code of Federal Regulations (46 CFR) especially Part 10, Subpart C.
- Scheduling and teaching an approved course at a location other than the site required in the application for approval and authorized in the approval letter unless prior site approval is requested of and granted by the Officer in Charge, Marine Inspection (OCMI) of the Regional Exam Center in whose area of responsibility the ''remote site'' is located.
- Not adhering to the approved length of the course; cutting short instructional time on a daily or weekly basis. Substituting ''homework'' or ''preparation time,'' either on computer-based questions or artificially drawn-out plotting exercises for quality classroom instructional contact hours.
- Using unqualified instructors, substandard facilities or otherwise presenting the course in a manner that is not sufficient for or conducive to achieving the learning objectives of the course.
- Not giving a final (end-of-course) exam equal in scope and difficulty to the Coast Guard exam for that particular license or endorsement. Also, for not giving a final exam or a ''re-take'' exam which is totally different than any homework, classroom ''practice exercise'' or exam previously viewed by the student.
- Issuing certificates of course completion to students who have not demonstrated competency or who have not otherwise met the course requirements.
- Advertising, holding a course, or issuing certificates of course completion to students as having passed a course of instruction for which the school does not hold a valid Coast Guard approval.
- Assisting a student in passing the final (end-of-course) exam by either directly or indirectly providing any assistance including, but not limited to, supplying answers, hinting at the correct answer, grading and returning the exam for completion and indicating that certain answers or choices are incorrect prior to grading.
- Giving a student a final (end-of-course) exam orally. The authority to give an oral examination rests with the OCMI per 46 CFR 10.205.
- Allowing a student to enroll or join the course after the beginning of course instruction.

In order to prevent these infractions, and ensure the integrity of Coast Guard approved courses, it is necessary to establish suspension, revocation, and appeal provisions in our regulations.

Discussion of Proposed Rule

1. The Coast Guard proposes to amend section 10.302(a) to require training organizations seeking course approval to submit course packages to the Commanding Officer, National Maritime Center, (NMC) directly rather than via the OCMI.

Amended paragraph (a) would also reflect that the title of the Director, National Maritime Center has been changed to the Commanding Officer, National Maritime Center.

At present, course packages are submitted to the OCMI who then conducts a preliminary review of the course, including an inspection of the proposed teaching facility and a review of instructor qualifications. Upon completion of this preliminary review, the course package is then forwarded to the NMC with the OCMI's recommendation for approval or disapproval. The NMC then conducts its review of the course and either issues or denies approval. Under the proposed rule, courses will be submitted directly to the NMC, who will then direct the OCMI to conduct an inspection of the teaching facility and evaluation of the proposed instructors. This will allow the OCMI and NMC to conduct their reviews concurrently thereby reducing the time between initial submission of the course by the training organization and approval of the course by the NMC.

Paragraph (a) would be amended to indicate that the Coast Guard now approves training that satisfies regulatory requirements or that substitutes for a Coast Guard

examination or a portion of a sea service requirement.

2. The Coast Guard proposes to amend section 10.302, paragraphs (c) and (d), to add, in each paragraph, that approvals expire when a school closes or when a school no longer offers the course.

3. The Coast Guard also proposes to add three paragraphs to section 10.302. New paragraph (e) would enumerate the conditions that allow the NMC or OCMI to suspend a course approval. Approval may be suspended if the Coast Guard determines that a specific course does not comply with 46 CFR Parts 10, 12, 13 or 15 or the requirements specified in the course approval, if the course substantially deviates from the course framework that was initially submitted for approval, or if the course is presented in a manner that is not sufficient for, or conducive to, achieving learning objectives. If such a determination is made, the cognizant OCMI may suspend the approval, may direct the surrender of the certificate of approval and/or direct the holder to cease claiming the course is Coast Guard approved. In the event of suspension, the cognizant OCMI will notify the approval holder in writing of the impending suspension, and give them an opportunity to correct the reasons for suspension. If the approval holder fails to correct the reasons for suspension, the course will be suspended and the matter referred to the Commanding Officer, NMC. Upon such suspension, the Commanding Officer, National Maritime Center will notify the approval holder that the course fails to meet applicable requirements and will explain how those deficiencies can be corrected. The NMC may grant the approval holder up to 60 days in which to correct the deficiencies.

New paragraph (f) would identify conditions that allow the Commanding Officer, National Maritime Center to revoke an approval. Approval(s) may be revoked for failure to correct deficiencies identified by the Commanding Officer, National Maritime Center. The Coast Guard may also revoke any or all course approvals held by an approval holder if there has been a determination that the approval holder has a demonstrated history of failure to comply with applicable requirements of their course approvals. In such instances, the approval holder has shown a clear disregard for the terms of their approval such that it is reasonable to infer that they are not adhering to their approval in any of their courses. This revocation would ensure the integrity of Coast Guard approved training by revoking all approvals if that approval holder's conduct is such that there is reasonable cause to suspect that all training offered by that approval holder is not being conducted in compliance with the Code of Federal Regulations or the requirements of their course approvals. Course approvals can also be revoked if there is a demonstrated history of substantial deviations from course curricula or, presenting courses in a manner that is not sufficient for, or conducive to, achieving learning objectives.

New paragraph (g) would outline the appeal procedure for any of the above actions. Persons directly affected by a suspension or revocation of an approval may appeal to the Commandant via the Commanding Officer, National Maritime Center as provided for by 46 CFR Part 1.03–15.

Regarding appeals, 46 CFR 1.03–15(h)(3) and 1.03–45 would be amended to reflect that the title of the Director, National Maritime Center has been changed to Commanding Officer, National Maritime Center, and would add language about appeals regarding suspension or revocation of course approvals.

4. In addition, the Coast Guard proposes to amend section 10.303(e) to require training organizations to submit change requests to approved courses to the Commanding Officer, National Maritime Center (NMC–4B) directly rather than via the OCMI.

Regulatory Evaluation

This proposed rule is not a significant regulatory action under section 3(f) of Executive Order 12866 and does not require an assessment of potential costs and benefits under section 6(a)(3) of that Order. It has not been reviewed by the Office of Management and Budget under that Order. It is not significant under the regulatory policies and procedures of the Department of Transportation (DOT) (44 FR 11040; February 26, 1979). The Coast Guard expects the economic impact of this proposed rule to be so minimal that a full Regulatory Evaluation under paragraph 10e of the regulatory policies and procedures of DOT is unnecessary.

Course approval suspensions, revocations, or expirations do not impose specific requirements on any course holder that would cause an economic effect. Rather, this rule establishes a standard enforcement method for the rare number of course approval holders who do not comply with applicable statutes, regulations, and the terms of course approval.

Small Entities

Under the Regulatory Flexibility Act (5 U.S.C. 601 *et seq.*), the Coast Guard considers whether this proposed rule, if adopted, would have a significant economic impact on a substantial number of small entities. ''Small entities'' include small businesses, not-for-profit organizations that are independently owned and operated and are not dominant in their fields, and governmental jurisdictions with populations of less than 50,000.

The small entities affected by this rule are privately owned and operated schools with one to several employees, community colleges, and maritime labor union owned and operated schools. Suspension or revocation of an approval for a course or courses depends on the nature and severity of the infraction with the resultant loss of revenue for the specific period.

However, we realize that most schools operate within the confines of course approval regulations, guidelines and letters. This notice of proposed rulemaking would provide a standard mechanism, in regulation, for the rare instances when a school might deviate from those course approval regulations, guidelines and letters. Also, this rule would provide an opportunity for the approval holder to correct any deficiencies prior to revocation.

Therefore, the Coast Guard certifies under 5 U.S.C. 605(b) that this proposed rule, if adopted, will not have a significant economic impact on a substantial number of small entities. If, however, you think that your business or organization qualifies as a small entity and that this proposed rule will have a significant economic impact on your business or organization, please submit a comment (see **ADDRESSES**) explaining why you think it qualifies and in what way and to what degree this proposed rule will economically affect it.

Assistance for Small Entities

In accordance with section 213(a) of the Small Business Regulatory Enforcement Fairness Act of 1996 (Pub. L. 104–121), the Coast Guard wants to assist small entities in understanding this proposed rule so that they can better evaluate its effects on them and participate in the rulemaking process. We will mail copies of the notice of proposed rulemaking to all schools teaching approved courses to facilitate small businesses' ability to respond with comments. If your small business or organization is affected by this rule and you have questions concerning its provisions or options for compliance

please contact Gerald Miante, 703–235–0018.

Collection of Information

This proposed rule contains no new collection-of-information requirements under the Paperwork Reduction Act (44 U.S.C. 3501 *et seq.*). Collection of information control number OMB 2115–0111 is assigned to this section.

Federalism

The Coast Guard has analyzed this proposed rule under the principles and criteria contained in Executive Order 12612 and has determined that this proposed rule does not have sufficient federalism implications to warrant the preparation of a Federalism Assessment.

Environment

The Coast Guard considered the environmental impact of this proposed rule and concluded that under paragraph 2.B.2.e.(34)(a) of Commandant Instruction M16475.1B, this proposed rule is categorically excluded from further environmental documentation. A ''Categorical Exclusion Determination'' is available in the docket for inspection or copying where indicated under **ADDRESSES**.

List of Subjects

46 CFR Part 1

Administrative practice and procedure, Organization and functions (Government agencies), Reporting and recordkeeping requirements.

46 CFR Part 10

Reporting and recordkeeping requirements, Schools, Seamen.

For the reasons discussed in the preamble, the Coast Guard proposes to amend 46 CFR parts 1 and 10 as follows:

PART 1—ORGANIZATION, GENERAL COURSE AND METHODS GOVERNING MARINE SAFETY FUNCTIONS

1. The authority citation for part 1 continues to read as follows:

Authority: 5 U.S.C. 552; 14 U.S.C. 633; 46 U.S.C. 7701; 49 CFR 1.45, 1.46; § 1.01–35 also issued under the authority of 44 U.S.C. 3507.

2. In § 1.03–15, revise paragraph (h)(3) to read as follows:

§ 1.03–15 General.

* * * * *

(h) * * *

(3) Commanding Officer, National Maritime Center, for appeals involving vessel documentation issues and suspension or revocation of course approvals.

* * * * *

3. Revise § 1.03–45 to read as follows:

§ 1.03–45 Appeals from decisions or actions involving documentation of vessels and suspension or revocation of course approvals.

Any person directly affected by a decision or action of an officer or employee of the Coast Guard acting on or in regard to the documentation of a vessel under part 67 or suspension or revocation of course approvals under part 10 of this chapter, may make a formal appeal of that decision or action to the Commandant (G–MO) via the Commanding Officer, National Maritime Center, in accordance with procedures contained in §§ 1.03–15 through 1.03–25 of this subpart.

PART 10—LICENSING OF MARITIME PERSONNEL

4. The authority citation for part 10 continues to read as follows:

Authority: 31 U.S.C. 9701; 46 U.S.C. 2101, 2103, 2110; 46 U.S.C. Chapter 71; 46 U.S.C. 7502, 7505, 7701; 49 CFR 1.45, 1.46; Sec. 10.107 also issued under the authority of 44 U.S.C. 3507.

5. In § 10.302, in paragraphs (c) and (d), immediately preceding the words ''or on the date of'', add the words ''when the school closes, when the school no longer offers the course,''; revise paragraph (a) introductory text; and add paragraphs (e), (f), and (g) to read as follows:

§ 10.302 Course approval.

(a) The Coast Guard approves courses satisfying regulatory requirements and those that substitute for a Coast Guard examination or a portion of a sea service requirement. The owner or operator of a training school desiring to have a course approved by the Coast Guard shall submit a written request to the Commanding Officer, National Maritime Center, NMC–4B, 4200 Wilson Boulevard, Suite 510, Arlington, VA 22203–1804, that contains:

* * * * *

(e) *Suspension of approval.* If the Coast Guard determines that a specific course does not comply with the provisions of 46 CFR parts 10, 12, 13 or 15, or the requirements specified in the course approval; or substantially deviates from the course curriculum package as submitted for approval; or if the course is being presented in a manner that is insufficient to achieve learning objectives; the cognizant OCMI may suspend the approval, may require the holder to surrender the certificate of approval, if any, and may direct the holder to cease claiming the course is Coast Guard approved. The cognizant OCMI will notify the approval holder in writing of its intention to suspend the approval and the reasons for suspension. If the approval holder fails to correct the reasons for suspension, the course will be suspended and the matter referred to the Commanding Officer, National Maritime Center. The Commanding Officer, National Maritime Center, will notify the approval holder that the specific course fails to meet applicable requirements, and explain how those deficiencies can be corrected. The Commanding Officer, National Maritime Center may grant the approval holder up to 60 days in which to correct the deficiencies.

(f) *Revocation of approval.* (1) The Commanding Officer, National Maritime Center may revoke approval for any course when the approval holder fails to correct the deficiency(ies) of a suspended course approval within a time period allowed under paragraph (e) of this section.

(2) The Commanding Officer, National Maritime Center may revoke approval of any or all courses by an approval holder upon a determination that the approval holder has demonstrated a pattern or history of:

(i) Failing to comply with the applicable regulations or the requirements of course approvals;

(ii) Substantial deviations from their approved course curricula; or

(iii) Presenting courses in a manner that is insufficient to achieve learning objectives.

(g) *Appeals of suspension and revocation of approval.* Anyone directly affected by a decision to suspend or revoke an approval may appeal the decision to the Commandant via the Commanding Officer, National Maritime Center, as provided in § 1.03–45 of this chapter.

6. In § 10.303, revise paragraph (e) to read as follows:

§ 10.303 General standards.

* * * * *

(e) Not change its approved curriculum unless approved, in writing, after the request for change has been submitted in writing to the Commanding Officer, National Maritime Center (NMC–4B).

* * * * *

Dated: April 13, 1998.

Joseph J. Angelo,

Acting Assistant Commandant for Marine Safety and Environmental Protection.

[FR Doc. 98–12659 Filed 5–12–98; 8:45 am]

BILLING CODE 4910–15–M

DEPARTMENT OF COMMERCE

National Oceanic and Atmospheric Administration

50 CFR Part 600

[I.D. 030398C]

Magnuson Act Provisions; Essential Fish Habitat

AGENCY: National Marine Fisheries Service (NMFS), National Oceanic and Atmospheric Administration (NOAA), Commerce.

ACTION: Proposed recommendations for Essential Fish Habitat for Pacific coast salmon, groundfish, and coastal pelagics; reopening of comment period.

SUMMARY: NMFS requests public comments on proposed recommendations for Essential Fish Habitat (EFH) to the Pacific Fishery Management Council (Council) for its Fishery Management Plans (FMPs) for salmon, groundfish, and coastal pelagics. To provide greater opportunity for public comment, the comment period on proposed EFH recommendations for these FMPs is reopened until May 22, 1998.

DATES: Comments will be accepted until May 22, 1998.

ADDRESSES: Send comments or requests for copies of the proposed EFH recommendations for the salmon and groundfish FMPs to Northwest Region, Sustainable Fisheries Division, NMFS, 7600 Sand Point Way NE, Seattle, WA 98115. Send comments or requests for a copy of the proposed EFH recommendations for the coastal pelagics FMP to Southwest Region, Sustainable Fisheries Division, NMFS, 501 West Ocean Blvd., Suite 4200, Long Beach, CA 90802.

FOR FURTHER INFORMATION CONTACT: Joe Scordino, NMFS Northwest Region, 206–526–6143, on salmon EFH; Yvonne deReynier, NMFS Northwest Region, 206–526–6120, on groundfish EFH; and Mark Helvey, NMFS Southwest Region, 707–575–7585, on coastal pelagics EFH.

SUPPLEMENTARY INFORMATION: Councils are required to amend their FMPs by October 11, 1998, by describing and identifying EFH for each managed fishery by the Magnuson-Stevens Fishery Conservation and Management Act (Magnuson-Stevens Act; 16 U.S.C. 1801 *et seq*.). NMFS promulgated an interim final rule on December 19, 1997 (62 FR 66531–66559), providing guidelines to assist the Councils in describing and identifying EFH in FMPs (including adverse impacts on EFH) and in consideration of actions to ensure the conservation and enhancement of EFH. The Magnuson-Stevens Act also requires NMFS to provide each Council with recommendations and information regarding EFH for each fishery under that Council's authority.

NMFS announced the availability of its proposed EFH recommendations for the Pacific Council's FMPs for salmon, groundfish, and coastal pelagics and a series of public meetings to receive public comments on March 9, 1998 (63 FR 11402 - 11403). For copies of the proposed EFH recommendations, see **ADDRESSES**. Public comments are requested by May 22, 1998.

Authority: 16 U.S.C. 1801 *et seq*.

Dated: May 8, 1998.

James P. Burgess,

Director, Office of Habitat Conservation, National Marine Fisheries Service.

[FR Doc. 98–12701 Filed 5–12–98; 8:45 am]

BILLING CODE 3510–22–F

Notices

Federal Register
Vol. 63, No. 92
Wednesday, May 13, 1998

This section of the FEDERAL REGISTER contains documents other than rules or proposed rules that are applicable to the public. Notices of hearings and investigations, committee meetings, agency decisions and rulings, delegations of authority, filing of petitions and applications and agency statements of organization and functions are examples of documents appearing in this section.

AFRICAN DEVELOPMENT FOUNDATION

Sunshine Act Meeting; Board of Directors Meeting

PLACE: ADF Headquarters.

DATE: Monday, 18 May 5:00–7:00 p.m. and Tuesday, 19 May 9:00–11:00 a.m.

STATUS: Open.

Agenda

Monday, 18 May 1998

5:00–7:00 p.m. Meeting

Tuesday, 19 May 1998

9:00 a.m. Chairman's Report; President's Report; Trade and Investment Initiative

11:00 a.m. Adjournment

If you have any questions or comments, please direct them to Paul Magid, General Counsel, who can be reached at (202) 673–3916.

William R. Ford,

President.

[FR Doc. 98–12792 Filed 5–8–98; 4:15 pm]

BILLING CODE 6116–01–M

DEPARTMENT OF AGRICULTURE

Forest Service

DEPARTMENT OF THE INTERIOR

National Park Service

Joint Secretarial Order; Pisgah National Forest, North Carolina and Blue Ridge Parkway; Joint Order Transferring Administrative Jurisdiction of National Forest System Lands

By virtue of the authority vested in the Secretary of Agriculture and in the Secretary of the Interior by the Act of June 8, 1940, which amended the Act of June 30, 1936 (16 U.S.C. 460a–1), it is ordered as follows:

The National Forest System lands described as portions of Tract V–1, Parcels 1 and 2 in Section 2–S and Parcel 1 in Section 2–T of the Blue Ridge Parkway, which are part of the Pisgah National Forest located in Henderson, Buncombe, Haywood and Transylvania Counties, North Carolina, are hereby transferred from the jurisdiction of the Secretary of Agriculture to the jurisdiction of the Secretary of the Interior subject to outstanding rights or interests of record. Pursuant to the Act of June 8, 1940, which amended the act of June 30, 1936, the National Forest lands transferred to the Department of the Interior shall be administered as part of the Blue Ridge Parkway.

A description of the lands to be transferred and a map are available for public inspection at the Office of the Chief, Forest Service, U.S. Department of Agriculture, Auditors Building, 201 14th Street, S.W., at Independence Avenue, S.W., Washington, D.C. 20250.

Daniel R. Glickman,

Secretary of Agriculture.

Bruce Babbitt,

Secretary of the Interior.

[FR Doc. 98–12697 Filed 5–12–98; 8:45 am]

BILLING CODE 4310–70–P

DEPARTMENT OF AGRICULTURE

Forest Service

Committee of Scientists Meeting

AGENCY: Forest Service, USDA.

ACTION: Notice of meeting.

SUMMARY: A meeting of the Committee of Scientists is scheduled for May 27–29 in Boulder, Colorado. The purpose of the meeting is for the committee to continue to draft its report and recommendations for the Secretary of Agriculture and the Chief of the Forest Service. The meeting is open to the public.

DATES: A meeting is scheduled for May 27–29 in Boulder, Colorado.

ADDRESSES: The meeting will be held at the Holiday Inn, 800 28th Street, Boulder, Colorado. The meeting will begin at 9 a.m. and end at 5 p.m. on all 3 days.

Written comments on improving land and resource management planning may be sent to the Committee of Scientists, P.O. Box 2140, Corvallis, OR 97339 or the Committee may be accessed via the Internet at www.cof.orst.edu./org/scicomm/.

FOR FURTHER INFORMATION CONTACT: Bob Cunningham, Designated Federal Official to the Committee of Scientists, Telephone: 202–205–2494.

SUPPLEMENTARY INFORMATION: The Committee of Scientists was chartered to provide scientific and technical advice to the Secretary of Agriculture and the Chief of the Forest Service on improvements that can be made to the National Forest System land and resource management planning process (62 FR 43691; August 15, 1997).

Dated: May 6, 1998.

Robert C. Joslin,

Deputy Chief, National Forest System.

[FR Doc. 98–12626 Filed 5–12–98; 8:45 am]

BILLING CODE 3410–11–M

DEPARTMENT OF COMMERCE

National Oceanic and Atmospheric Administration

[Docket No. 980427105–8105–01]

RIN 0648–ZA41

Sea Grant Industry Fellows Program

AGENCY: Office of Oceanic and Atmospheric Research, National Oceanic and Atmospheric Administration, Commerce.

ACTION: Notice of request for proposals.

SUMMARY: This notice announces that proposals may be submitted for a Fellowship program sponsored by the National Sea Grant Office (NSGO) to strengthen ties between academia and industry and to fulfill its broad educational responsibilities. With required matching funds from private industrial sponsors, Sea Grant expects to support up to four new Industrial fellows in 1998. Each fellow will be a graduate student selected through national competition, and will be known as a Company Name/Sea Grant Industrial Fellow. Proposals must be submitted by academic institutions who have identified a graduate fellow and an industrial sponsor who will provide matching funds.

DATES: Proposals must be submitted by June 12, 1998 to the nearest state Sea Grant College Program.

ADDRESSES: Applications should be requested from the nearest Sea Grant college program. The addresses of the Sea Grant college program directors can be found on Sea Grant's home page (*http://www.mdsq.umd.edu/NSGO/index.html*). The addresses may also be obtained by contacting the Program Manager at the National Sea Grant Office (see below).

FOR FURTHER INFORMATION CONTACT: Dr. Vijay G. Panchang, Program Manager, National Sea Grant Office/NOAA, 1315 East-West Highway, Silver Spring, MD 20910. Tel. (301) 713–2435 ext. 142; e-mail: *Vijay.Panchang@noaa.gov*.

SUPPLEMENTARY INFORMATION:

A. Program Authority

Authority: 33 U.S.C. 1127(a).

B. Catalog of Federal Domestic Assistance

CFDA No. 11.417—Sea Grant Support.

C. Introduction

Today's global economy is putting unprecedented demands on the US industrial community for innovation and new technology. Two critical components of success in that endeavor are well-trained human resources and high rates of technology commercialization. This situation presents challenges to industry and universities to develop new paradigms that will create more efficient utilization of available human, fiscal, and technical resources and closer collaboration between universities and industry. Successful methods of transferring technology from academia to industry include hiring graduates trained in particular technologies and developing opportunities for collaboration between industrial and academic scientists and engineers. To strengthen ties between academia and industry, Sea Grant developed the Industrial Fellows Program in 1995. With required matching funds from private industrial sponsors, Sea Grant expects to support up to four new Industrial fellows in 1998. Each fellow will be a graduate student selected through national competition, and will be known as a Company Name/Sea Grant Industrial Fellow.

D. Fellowship Program Goals

To enhance the education and training provided to top graduate students in US colleges and universities; to provide real-world experience of industrial issues to graduate students to accelerate their career development; to increase interactions between the nation's top scientists and engineers and their industrial counterparts; to accelerate the exchange of information and technologies between universities and industry; to provide a mechanism for industry to influence Sea Grant research priorities and solve problems of importance to industry; and to forge long-term relationships between Sea Grant colleges and industrial firms.

E. Program Description

The Sea Grant Industrial Fellows Program provides, in cooperation with specific companies, support for highly-qualified graduate students who are pursuing research on topics of interest to a particular industry/company. In a true partnership, the student, the faculty adviser, the Sea Grant college or institute, and the industry representative work together on a project from beginning to end. Research facilities and the cost of the activity are shared. University faculty are the major source for identifying potential industrial collaborators and suitable research topics. However, other sources can be used to identify potential industrial partners including the Sea Grant Marine Advisory Services, university industrial relations offices, and the Sea Grant Review Panel. Sea Grant directors are encouraged to use a variety of sources in building successful partnerships with industry.

F. Proposal Features

Interested members of US institutions of higher education may submit a proposal through the nearest Sea Grant program for a grant to support up to 50 percent of the total budget. The fellowship can be for a maximum of three years, though funding will be in annual increments. No more than $30,000 of federal funds may be requested per year. Indirect costs on federal funds are limited to 10 percent of total modified direct costs. The proposal must include a written matching commitment, equal to the federal request, from the industrial partner to support the budget for the period of the award. Allocation of matching funds must be specified in the budget. Use of the industrial matching funds for student stipend support will be looked on favorably.

The budget should include adequate travel funds for the student and the faculty advisor to meet at least twice per year during the fellowship period, preferably at the site of the industrial partner. Funds should also be allocated for one trip per year to NOAA offices in Silver Spring, Maryland, for a meeting of all fellows, advisors, and industrial partners.

Proposal Form and Content

Proposals are limited to 10 pages of text (8.5 inches by 11 inches, 10 point type) exclusive of budgets, vitae, letters of commitment, company description, and required forms. Proposals should contain the following:

1. The problem and its importance: What is the problem being addressed and what is its scientific and economic importance to the advancement of technology, to the cooperating industrial partner, and to the region or nation?
2. The research proposed: What are the goals, objectives, and anticipated approach of the proposed research? While a detailed work plan is not expected, the proposal should present evidence that there has been thoughtful consideration of the approach to the problem under study. What capabilities does the industrial partner possess that will benefit the research program?
3. Benefits: Upon successful completion of the project, what are the anticipated benefits to the student, the industrial partner, the university and its faculty, the sponsoring Sea Grant program, and the nation?
4. References/Bibliography.
5. Budget for each year and a cumulative budget.
6. Letter of commitment from the industrial partner.
7. Vitae of the student, the faculty advisor, and the company-appointed research mentor (limited to two pages per person).
8. A brief (one-page) description of the industrial firm.

Participant Interest

Interested graduate students or faculty advisors should contact the nearest Sea Grant program director for further details regarding proposal submission. Proposals must be submitted to the nearest Sea Grant program director by June 12, 1998. The addresses of the directors can be found on Sea Grant's home page (*http://www.mdsg.umd.edu/NSGO/index.html*). The addresses of the directors may also be obtained from Dr. Vijay Panchang, Program Manager, National Sea Grant Office/NOAA, 1315 East-West Highway, Silver Spring, MD 20910; Tel. 301–713–2435, ext. 142.

Sea Grant Program—Proposal Submission

The Sea Grant program directors must ensure that the original and two copies of all proposals, all required NOAA forms (Sea Grant Project Summary and Budget forms), OMB forms (SF424, SF424a, SF424b), form CD–511, mail reviews, and a cover letter are received at the NSGO on or before July 13, 1998.

Proposals should be mailed to: Dr. Vijay Panchang, Program Manager, National Sea Grant Office/NOAA, 1315 East-West Highway, Silver Spring, MD 20910. Tel. (301) 713–2435, ext. 142. Fellows receive funds directly from the National Sea Grant Colleges as part of a project awarded to the submitting Sea Grant program.

Proposal Evaluation

1. The sponsoring Sea Grant program is responsible for conducting the mail peer review of the proposed project for significance and importance of the problem being addressed; scientific and technical merit; and benefit to the discipline, field, and nation. Proposals may be revised on the basis of reviewer comments. All proposals must be accompanied by copies of the peer reviews and a letter from the Sea Grant director describing what, if any, changes have been made to the proposal as a result of the review process.

2. Proposals will be reviewed at the National Sea Grant Office by a panel composed of individuals from academia, industry, and the federal government with particular expertise in industry/academic interactions. The panel will be asked to assess each proposal, taking into account all mail peer review ratings, based on the following criteria:

a. The importance of the problem and the benefits expected to the industrial partner and the nation due to the advancement of technology (40%).

b. The benefit accruing to the student from his or her participation as a Sea Grant Industrial Fellow (20%).

c. The level of commitment of the industrial partner to the project, particularly student stipend support (20%).

d. The potential for the establishment of a long-term relationship between the Sea Grant program and the industrial firm (20%).

Selection Procedures

All proposals will be evaluated and ranked by the peer review panelists, who will make individual recommendations to the selecting officer, the Director of the National Sea Grant College program.

G. Timetable

June 12, 1998—Proposals due in the nearest Sea Grant College Program office.

July 13, 1998—Proposals due in the National Sea Grant September 1, 1998 (approximate)—Funds awarded to selected recipients; fellowship begins.

Other Requirements

(1) *Federal Policies and Procedures*—Recipients and subrecipients are subject to all Federal laws and Federal and DoC policies, regulations, and procedures applicable to Federal financial assistance awards.

(2) *Past Performance*—Unsatisfactory performance under prior Federal awards may result in an application not being considered for funding.

(3) *Preaward Activities*—If applicants incur any costs prior to an award being made, they do so solely at their own risk of not being reimbursed by the Government. Notwithstanding any verbal or written assurance that may have been received, there is no obligation on the part of DoC to cover preaward costs.

(4) *No Obligation for Future Funding*—If an application is selected for funding, DoC has no obligation to provide any additional future funding in connection with that award. Renewal of an award to increase funding or extend the period of performance is at the total discretion of DoC.

(5) *Delinquent Federal Debts*—No award of Federal funds shall be made to an applicant who has an outstanding delinquent Federal debt until either:

i. The delinquent account is paid in full,

ii. A negotiated repayment schedule is established and at least one payment is received, or

iii. Other arrangements satisfactory to DoC are made.

(6) *Name Check Review*—All non-profit and for-profit applicants are subject to a name check review process. Name checks are intended to reveal if any key individuals associated with the applicant have been convicted of or are presently facing criminal charges such as fraud, theft, perjury, or other matters which significantly reflect on the applicant's management honesty or financial integrity.

(7) *Primary Applicant Certifications*—All primary applicants must submit a completed Form CD–511, ''Certifications Regarding Debarment, Suspension and Other Responsibility Matters; Drug-Free Workplace Requirements and Lobbying,'' and the following explanations are hereby provided:

i. *Nonprocurement Debarment and Suspension.* Prospective participants (as defined at 15 CFR part 26, section 105) are subject to 15 CFR part 26, ''Nonprocurement Debarment and Suspension'' and the related section of the certification form prescribed above applies;

ii. *Drug-Free Workplace.* Grantees (as defined at 15 CFR part 26, section 605) are subject to 15 CFR part 26, subpart F, ''Governmentwide Requirements for Drug-Free Workplace (Grants)'' and the related section of the certification form prescribed above applies;

iii. *Anti-Lobbying.* Persons (as defined at 15 CFR part 28, section 105) are subject to the lobbying provisions of 31 U.S.C. 1352, ''Limitation on use of appropriated funds to influence certain Federal contracting and financial transactions,'' and the lobbying section of the certification form prescribed above applies to applications/bids for grants, cooperative agreements, and contracts for more than $100,000, and loans and loan guarantees for more than $150,000, or the single family maximum mortgage limit for affected programs, whichever is greater; and

iv. *Anti-Lobbying Disclosures.* Any applicant that has paid or will pay for lobbying using any funds must submit an SF–LLL, ''disclosure of Lobbying Activities,'' as required under 15 CFR part 28, appendix B.

(8) *Lower Tier Certifications*—Recipients shall require applicants/bidders for subgrants, contracts, subcontracts, or other lower tier covered transactions at any tier under the award to submit, if applicable, a completed Form CD–512, ''Certifications Regarding Debarment, Suspension, Ineligibility and Voluntary Exclusion-Lower Tier Covered Transactions and Lobbying'' and disclosure form, SF–LLL,''Disclosure of Lobbying Activities.'' Form CD–512 is intended for the use of recipients and should not be transmitted to DoC. SF–LLL submitted by any tier recipient or subrecipient should be submitted to DoC in accordance with the instructions contained in the award document.

(9) *False Statements.* A false statement on an application is grounds for denial or termination of funds and grounds for possible punishment by a fine or imprisonment as provided in 18 U.S.C. 1001.

(10) *Intergovernmental Review*—Applications under this program are not subject to Executive Order 12372, ''Intergovernmental Review of Federal Programs.''

Classification

Prior notice and an opportunity for public comments are not required by the Administrative Procedure Act or any other law for this notice concerning grants, benefits, and contracts. Therefore, a regulatory flexibility analysis is not required for purposes of the Regulatory Flexibility Act. This action has been determined to be not significant for purposes of E.O. 12866.

This notice contains collection of information requirements subject to the Paperwork Reduction Act. The Project Summary Form has been approved by the Office of Management and Budget under control number 0648–0019, with an average response estimated to take 20 minutes; the Sea Grant Budget Form has been approved under Control Number 0648–0034, with an average response estimated to take 15 minutes. These estimates include the time for reviewing instructions, searching existing data sources, gathering and maintaining the data needed, and completing and reviewing the collection of information. Send comments on these estimates or any other aspect of these collections to National Sea Grant Office/NOAA, 1315 East-West Highway, Silver Spring, MD 20910 and to the Office of Information and Regulatory Affairs, Office of Management and Budget, Washington, DC 20503 (Attention: NOAA Desk Officer). Notwithstanding any other provision of the law, no person is required to respond to, nor shall any person be subject to a penalty for failure to comply with, a collection of information subject to the requirements of the Paperwork Reduction Act, unless that collection of information displays a currently valid OMB Control Number.

Dated: May 8, 1998.

Elbert W. Friday, Jr.,

Assistant Administrator, Office of Oceanic and Atmospheric Research, National Oceanic and Atmospheric Administration.

[FR Doc. 98–12750 Filed 5–12–98; 8:45 am]

BILLING CODE 3510–12–M

DEPARTMENT OF COMMERCE

National Oceanic and Atmospheric Administration

[I.D. 050698A]

Marine Mammals; File No. 782–1455 and File No. 738–1454

AGENCY: National Marine Fisheries Service (NMFS), National Oceanic and Atmospheric Administration (NOAA), Commerce.

ACTION: Receipt of applications.

SUMMARY: Notice is hereby given that the Douglas P. DeMaster, Ph.D., National Marine Mammal Laboratory, National Marine Fisheries Service, NOAA, 7600 Sand Point Way, NE, BIN C15700, Bldg. 1, Seattle, WA 98115–0070, has applied in due form for a permit to take Northern fur seals (*Callorhinus ursinus*), Steller sea lions (*Eumetopias jubatus*), and California sea lions (*Zalophus californianus*) for purposes of scientific research. In addition, Carole Conway, Genomic Variation Laboratory, Department of Animal Science, Meyer Hall, University of California, Davis, CA 95616–3322, has applied in due form for a permit to import blue whale (*Balaenoptera musculus*) skin samples from Canada for purposes of scientific research.

DATES: Written or telefaxed comments must be received on or before June 12, 1998.

ADDRESSES: The application and related documents are available for review upon written request or by appointment: See **SUPPLEMENTARY INFORMATION.**

Written comments or requests for a public hearing on this application should be mailed to the Chief, Permits and Documentation Division, F/PR1, Office of Protected Resources, NMFS, 1315 East-West Highway, Room 13705, Silver Spring, MD 20910. Those individuals requesting a hearing should set forth the specific reasons why a hearing on this particular request would be appropriate.

Comments may also be submitted by facsimile at (301) 713–0376, provided the facsimile is confirmed by hard copy submitted by mail and postmarked no later than the closing date of the comment period. Please note that comments will not be accepted by e-mail or by other electronic media.

FOR FURTHER INFORMATION CONTACT: Ruth Johnson or Sara Shapiro, 301/713–2289.

SUPPLEMENTARY INFORMATION: The subject permits are requested under the authority of the Marine Mammal Protection Act of 1972, as amended (MMPA; 16 U.S.C. 1361 *et seq.*), the Regulations Governing the Taking and Importing of Marine Mammals (50 CFR part 216), the Endangered Species Act of 1973, as amended (ESA; 16 U.S.C. 1531 *et seq.*), the regulations governing the taking, importing, and exporting of endangered fish and wildlife (50 CFR 222.23), and the Fur Seal Act of 1966, as amended (16 U.S.C. 1151 *et seq.*).

Dr. DeMaster (File No. 782–1455) seeks authorization to: monitor the status of the northern fur seal population (*Callorhinus ursinus*); evaluate the condition of pups from each cohort (health or strength of year-class); monitor the diet of fur seals in the Bering Sea during the summer; document the movement patterns and foraging behavior of various age and sex classes of fur seals; and incidentally disturb Steller sea lions (*Eumetopias jubatus*) and California sea lions (*Zalophus californianus*) while conducting the above-listed activities.

Carole Conway (File No. 738–1454) requests a permit to import blue whale (*Balaenoptera musculus*) skin samples from Canada over a 5-year period. The samples are necessary for a global study of the genetic structure of populations which will provide critical information for conservation management of this species.

In compliance with the National Environmental Policy Act of 1969 (42 U.S.C. 4321 *et seq.*), an initial determination has been made that the activity proposed is categorically excluded from the requirement to prepare an environmental assessment or environmental impact statement.

Concurrent with the publication of this notice in the **Federal Register**, NMFS is forwarding copies of this application to the Marine Mammal Commission and its Committee of Scientific Advisors.

The application and related documents submitted by Dr. DeMaster may be reviewed in the following locations:

Permits and Documentation Division, Office of Protected Resources, NMFS, 1315 East-West Highway, Room 13130, Silver Spring, MD 20910 (301/713–2289);

Regional Administrator, Northwest Region, National Marine Fisheries Service, NOAA, 7600 sand Point Way, NE, BIN C15700, Bldg. 1, Seattle, WA 98115–0070;

Regional Administrator, Southwest Region, National Marine Fisheries Service, NOAA, 501 West Ocean Blvd., Suite 4200, Long Beach, CA 90802–4213; and

Regional Administrator, Alaska Region, National Marine Fisheries Service, NOAA, P.O. Box 21668, Juneau, AK 99802–1668.

The application and related documents submitted by Ms. Conway may be reviewed in the following locations:

Permits and Documentation Division, Office of Protected Resources, NMFS, 1315 East-West Highway, Room 13130, Silver Spring, MD 20910 (301/713–2289); and

Regional Administrator, Southwest Region, National Marine Fisheries Service, NOAA, 501 West Ocean Blvd., Suite 4200, Long Beach, CA 90802–4213.

Dated: May 7, 1998.

Ann D. Terbush,

Chief, Permits and Documentation Division, Office of Protected Resources, National Marine Fisheries Service.

[FR Doc. 98–12699 Filed 5-12-98; 8:45 am]

BILLING CODE 3510–22–F

COMMODITY FUTURES TRADING COMMISSION

Chicago Board of Trade Futures Contracts in Corn and Soybeans; Order To Designate Contract Markets and Amendment Order of November 7, 1997, as Applied to Such Contracts

AGENCY: Commodity Futures Trading Commission.

ACTION: Final order to Chicago Board of Trade.

SUMMARY: The Commodity Futures Trading Commission (Commission), by letter dated December 19, 1996, commenced a proceeding under section 5a(a)(10) of the Act by issuing to the Board of Trade of the City of Chicago (CBT) a notification that the delivery specifications of its corn and soybean futures contracts no longer accomplish the statutory objectives of ''permit[ting] the delivery of any commodity * * * at such point or points and at such quality and locational price differentials as will tend to prevent or diminish price manipulation, market congestion, or the abnormal movement of such commodity in interstate commerce.'' 61 FR 67998 (December 26, 1996). The Commission, on November 7, 1997, issued an Order under section 5a(a)(10) of the Act to change and to supplement the delivery specifications of the CBT corn and soybean futures contracts. 62 FR 60831 (November 13, 1998). By letter dated November 17, 1997, the CBT notified the Commission that it would submit for Commission review an alternative to the contract terms ordered by the Commission and thereafter submitted draft applications for contract market designation for corn and soybeans, beginning with contract months in the year 2000.

The Commission on May 7, 1998, ordered that the applications for contract market designation in corn and in soybeans submitted by the CBT on December 19, 1997, and supplemented on March 20, 1998, be granted and amended its Order of November 7, 1997, as applied to the newly approved contracts to the extent stated. Under this Order, the Commission permits the CBT: (i) to add the southern Illinois River as delivery locations for soybeans and to delete the Toledo, Ohio switching district as a delivery location for soybeans; (ii) to modify the premiums for delivery of soybeans and corn at non-par locations from a percentage of the freight tariff to a specified fixed cents per bushel schedule of premiums; (iii) to modify the contingency plan to include a conforming fixed cents-per-bushel schedule of locational adjustments; and (iv) to add a minimum net worth eligibility requirement for issuers of shipping certificates of $5 million. Nothing in the Commission's Order vacates the designation of the current corn and soybean futures contracts, vacates the applicability of the November 7, 1997 Order to those contracts, or amends the terms of the November 7, 1997 Order as applied to those contracts.

The Commission has determined that publication of this Order is in the public interest, will provide the public with notice of its action, and is consistent with the purposes of the Commodity Exchange Act.

DATES: This Order became effective on May 7, 1998.

ADDRESSES: Commodity Futures Trading Commission, Three Lafayette Centre, 1155 21st Street, NW., Washington, DC 20581.

FOR FURTHER INFORMATION CONTACT: Steven Manaster, Director, or Paul M. Architzel, Chief Counsel, Division of Economic Analysis, Commodity Futures Trading Commission, Three Lafayette Centre, 1155 21st Street, NW., Washington, D.C. 20581, (202) 418–5260, or electronically, Mr. Architzel at [PArchitzel@cftc.gov].

SUPPLEMENTARY INFORMATION: Section 5a(a)(10) of the Act provides that, as a condition of contract market designation, boards of trade are required to:

> permit the delivery of any commodity, on contracts of sale thereof for future delivery, of such grade or grades, at such point or points and at such quality and locational price differentials as will tend to prevent or diminish price manipulation, market congestion, or the abnormal movement of such commodity in interstate commerce * * *.

The Commission, on November 7, 1997, issued an Order under section 5a(a)(10) of the Act to change and to supplement the delivery specifications of the CBT corn and soybean futures contracts. 62 FR 60831 (November 13, 1998). By letter dated November 17, 1997, the CBT notified the Commission that it would submit for Commission review an alternative to the contract terms ordered by the Commission and thereafter submitted draft applications for contract market designation for corn and soybeans, beginning with contract months in the year 2000. The Commission, on December 1, 1997, published in the **Federal Register** notice of the CBT's draft proposal. 62 FR 63529. Subsequently, on December 19, 1997, the CBT submitted its proposal, and on March 20, 1998, the CBT amended its proposal. The Commission on May 7, 1998, designated the CBT as contract markets in corn and soybeans and amended the November 7, 1997 Order as applied to the newly approved contracts to the extent stated. The text of the Order is set forth below.

In the Matter of the Section 5a(a)(10) Notification to the Board of Trade of the City of Chicago Dated December 19, 1996, Regarding Delivery Point Specifications of the Corn and Soybean Futures Contracts.

Dated: May 7, 1998.

The Commodity Futures Trading Commission (CFTC or Commission) hereby orders that the applications for contract market designation in corn and in soybeans submitted by the Board of Trade of the City of Chicago (CBT) on December 19, 1997 and supplemented on March 20, 1998, be granted and hereby amends its Order under section 5a(a)(10), dated November 7, 1997, to permit the applications for designation to be granted. Under this Order, the Commission takes the following actions:

(1) Grants under section 5 of the Commodity Exchange Act (Act) the CBT's application for designation as a contract market in soybeans and approves under section 5a(a)(12) of the Act all of the proposed rules of the contract market contained in Attachment 1 to this Order;

(2) Grants under section 5 of the Act the CBT's application for designation as a contract market in corn and approves under section 5a(a)(12) of the Act all of the proposed rules of the contract market contained in Attachment 2 to this Order;

(3) Amends its Order of November 7, 1997, making all changes necessary to effect the above actions, as follows:

(i) permits the CBT to add the southern Illinois River as delivery locations for soybeans and to delete the Toledo, Ohio switching district as a delivery location for soybeans;

(ii) permits the CBT to modify the premiums for delivery of soybeans and corn at non-par locations from a percentage of the freight tariff to a fixed cents per bushel schedule of premiums;

(iii) permits the CBT to modify the contingency plan in the Order of November 7, 1997, to include a conforming fixed cents-per-bushel schedule of locational adjustments; and

(iv) permits the CBT to add a minimum net worth eligibility requirement for issuers of shipping certificates of $5 million;

Nothing in this Order precludes the CBT from listing for trading the soybean and corn contracts designated under this Order for contract months prior to the January 2000 soybean futures

contract month and the March 2000 corn futures contract month, the initial contract months for which the Order of November 7, 1997, became effective.

Nothing in this Order vacates the designation of the current corn and soybean futures contracts, vacates the applicability of the November 7, 1997 Order to those contracts, or amends the terms of the November 7, 1997 Order as applied to those contracts. Both or either of the currently designated contracts and the contracts designated by this Order may be traded.

Nothing in this Order mandates that Toledo, Ohio, cease operation as a delivery location in any commodity, either for futures contracts traded on the CBT, for futures contracts for which any other board of trade which might choose to seek contract market designation, or for any of Toledo's substantial cash market operations.

The Commission, as discussed below, bases these actions on its findings that available deliverable supplies of corn and soybeans under the CBT's present revisions are not so inadequate under section 5a(a)(10) as to require that the Commission mandate additional delivery points. However, the adequacy of corn and soybean supplies cannot be accurately and fully ascertained until after there is a history of deliveries occurring under the terms of the revised contracts. If in operation the revised contract terms result in inadequate deliverable supplies of corn or soybeans, the Commission will reconsider the need to require additional delivery points for the revised contracts. To that end, the Commission directs the CBT to report on the experience with deliveries and expiration performance in the revised corn and soybean futures contracts on an annual basis for a five-year period after contract expirations begin under the revised contracts.

The revised CBT proposed locational price differentials for the corn and soybean futures contracts fall within the range of commonly observed or expected commercial price differences, as required by section 5a(a)(10) of the Act and Commission policy. However, in light of the great variability in where the differential for each river segment falls within the range of commonly observed cash price differences, the Commission directs the CBT as part of the above reports on delivery and expiration performance also to report on the extent to which particular locational price differentials may discourage or encourage deliveries to be made from that location. This report should relate rates of delivery by river segment to the applicable differentials, focussing with particularity on September deliveries from all locations and on deliveries from the Peoria-Pekin and Havana-Grafton river segments year-round.

The Commission's conclusions are supported by factual analyses made by the CFTC staff and by written comments submitted to the Commission by commercial users of the corn and soybean futures contracts and by other interested persons both prior to and in response to the Commission's issuance of the Order of November 7, 1997, and in response to the Commission's request for comment in the **Federal Register** on the CBT's recent proposal. The Commission, in reaching its conclusions in this Order, considered the record before it, which includes a substantial amount of documentary evidence, a record number of written comments submitted in response to four requests for comment, and the transcriptions of statements presented by the CBT and interested members of the public during two open meetings of the Commission to consider these issues.

The Commission has reached its conclusions based upon the legal standards of the Commodity Exchange Act. Section 5a(a)(10) of the Act requires that exchanges establish such delivery points as will tend to prevent or diminish price manipulation, market congestion and the abnormal movement of commodities in interstate commerce. In carrying out the requirements of section 5a(a)(10), the Commission is not free to direct exchanges to add particular delivery locations if the Commission finds that the contract meets the statutorily-required level of deliverable supplies. Thus, the Commission's approval of the delivery locations selected by the CBT for its revised corn and soybean futures contracts is not based upon a finding that Toledo, Ohio, is in any way an inappropriate delivery point for these or any other futures contracts. To the contrary, Toledo currently is an active cash market for corn, soybeans and wheat, with over 120 million bushels of these commodities being received at that location in 1997. The available data indicate that Toledo will continue to be an active cash market center for these commodities in the future.[1] As the Commission in its Order of November 7, 1997, Toledo has proven to be an effective futures delivery point for corn and soybeans. 62 FR 60854. Accordingly, nothing precludes the CBT, it if chooses, from continuing to list for trading the soybean futures contract provided under the Order of November 7, 1997, which includes Toledo as a delivery point, or precludes any other exchange from seeking designation for a contract with Toledo as a delivery point.

The Commission's action in designating contract markets for corn and soybeans under the terms which the CBT has recently proposed does not vacate or negate the existing designated contracts which are the subject of the Order of November 7, 1997. That Order remains in effect as to the current contracts and, as modified herein, applies to the revised contracts. Until the designation for such contracts are vacated, the CBT may trade both the current and the revised contracts simultaneously, if it so chooses.[2] Moreover, the CBT may begin trading the revised contracts for contract months with expirations prior to year 2000.

I. The Section 5a(a)(10) Proceeding

The Commission, by letter dated December 19, 1996, commenced a proceeding under section 5a(a)(10) of the Act by issuing to the CBT a notification that the delivery specifications of its corn and soybean futures contracts no longer accomplish the statutory objectives of ''permit[ting] the delivery of any commodity * * * at such points or point and at such quality and locational price differentials as will tend to prevent or diminish price manipulation, market congestion, or the abnormal movement of such commodity in interstate commerce.'' Letter of December 19, 1996, to Patrick Arbor from the Commission, 61 FR 67998 (December 26, 1996) (section 5a(a)(10) notification). The section 5a(a)(10) notification detailed long-term trends in the storage, transportation and processing of corn and soybeans, related those trends to changes in cash market conditions at the CBT delivery locations, and analyzed the lack of consistency between the cash market for these commodities and the delivery provisions of the contracts. *Id.* at 68000–68004.

The closure of three of the six existing Chicago warehouses regular for delivery

[1] In this regard, Toledo continues to perform a vital role in futures markets due to its position as the primary delivery point for the CBT wheat futures contract. In this respect, Toledo is located within one of the few primary production areas for soft red winter wheat and has provided the bulk of the deliverable supply for that futures contract for many years.

[2] Of course, if the CBT elected simultaneously to list the current and revised futures contracts for trading and intends to list options on those futures contracts, it must submit for prior Commission approval applications for designation as a contract market in options on either the revised or current futures contracts to assure that the CBT is properly authorized to trade options on both futures contracts.

under the futures contracts during the year prior to the section 5a(a)(10) notification underscored the need to address without delay the fundamental problems with the contract's delivery specifications. However, the CBT membership defeated contract modifications recommended by its board of directors in October 1996.[3] After an additional Chicago delivery warehouse stopped accepting soybeans and corn in late October 1996, the Commission formally commenced this proceeding under section 5a(a)(10) of the Act on December 19, 1996, by finding that the CBT corn and soybean futures contracts no longer met the requirements of that section of the Act.

Subsequently, on April 16, 1997, the CBT submitted its response to the section 5a(a)(10) notification in the form of proposed exchange rule amendments (1997 proposal). Those proposed rule amendments would have replaced the existing delivery system involving delivery of warehouse receipts representing stocks of grain stored at terminal elevators in Chicago, Toledo, and St. Louis with delivery of shipping certificates.[4] Such shipping certificate would have provided for corn or soybeans to be loaded into a barge at one of the shipping stations located along a 153-mile segment of the Illinois River from Chicago (including Burns Harbor, Indiana) to Pekin, Illinois and additionally to be delivered in Chicago by rail or vessel. Delivery at all eligible locations would have been at par. The CBT's 1997 proposal would have eliminated the current delivery points on its corn and soybean futures contracts at Toledo, Ohio and St. Louis, Missouri and would have restricted firms eligible to issue shipping certificates to those meeting a minimum net worth requirement of $40 million, in addition to a number of other requirements.

The Commission previously had published the substance of the CBT's 1997 proposed amendments in the **Federal Register** for a 15-day comment period (62 FR 12156 (March 14, 1997), later extended until June 16, 1997 (62 FR 1997). The Commission received almost 700 comments, the largest number of comments ever received by the Commission on any issue before it. On June 12 1997, the Commission held a public meeting at the CBT's request to accept oral and written statements by the CBT and interested members of the public. 62 F.R. 29107 (May 29, 1997). The participants represented a cross-section of views, both favoring and opposing the CBT proposal.[5]

On September 15, 1997, the Commission issued a proposed order, publishing its text in the **Federal Register** with a request for public comment.[6] 62 FR 49474 (September 22, 1997). The comment period on the proposed order expired on October 22, 1997. Over 230 commenters submitted comments to the Commission on the proposed order.[7] In addition, the Commission held a public hearing on October 15, 1997, at which the CBT was afforded the opportunity mandated under section 5a(a)(10) of the Act to appear before the Commission and to be heard. In addition to its oral presentations, the CBT submitted written statements and documentary evidence.[8] The CBT also filed exceptions to the proposed order as provided under the Act.

On November 7, 1997, the Commission issued a final Order (Order) to the CBT under section 5a(a)(10) of the Act. 62 FR 60831 (November 13, 1997). The Commission's Order found that the CBT's 1997 proposal failed to meet the requirements of sections 5a(a)(10), 5a(a)(12), 8a(7), and 15 of the Act because of (1) an inadequate amount of deliverable supplies of soybeans; (2) the failure to include required locational differentials; (3) the failure to provide an adequate contingency plan for alternative deliveries if river transportation were obstructed; and (4) the unnecessary limitation on eligibility for issuing corn and soybean shipping certificates imposed by the CBT's proposed $40 million minimum net worth requirement.

Based on these findings, the Commission Order changed and supplemented the delivery locations for CBT's soybean futures contract by retaining the Toledo, Ohio switching district and the St. Louis/East St. Louis/Alton areas as delivery locations, with Toledo priced at par and the St. Louis/East St. Louis/Alton area priced at a premium over contract price of 150 percent of the difference between the Waterways Freight Bureau Tariff No. 7 rate applicable to that location and the rate applicable to Chicago, Illinois. The Commission also required that both corn and soybeans from shipping locations on the northern Illinois River be deliverable at a premium over contract price of 150 percent of the difference between the Waterways Freight Bureau Tariff No. 7 rate applicable to that location and the rate applicable to Chicago, Illinois, with Chicago at contract price. For both the CBT corn and soybean futures contracts, the Commission ordered that the contingency plan for alternative delivery procedures when traffic on the northern Illinois River is obstructed be changed and supplemented and that the $40 million minimum net worth eligibility requirement for issuers of shipping certificates be eliminated.

The Commission's Order explicitly permitted the CBT to seek appropriate modifications to it, stating that the Commission had not ''precluded the CBT from submitting for Commission review and approval under sections 5a(a)(10) and 5a(a)(12) of the Act any alternative proposed delivery specifications for its corn or soybean futures contracts.'' 62 FR 60833. To the contrary, the Order provided that the CBT

> will continue to be free to propose revisions of the new terms to the Commission for its consideration under sections 5a(a)(10) and 5a(a)(12) or to submit a petition to the Commission to reconsider or to amend this Order. If the CBT believes that an alternative to the new terms and to its original proposal would better serve its business interests and would also meet the statutory requirements, the CBT should submit such a proposed rule revision or petition.

Id. at 60834.

By letter dated November 17, 1997, the CBT notified the Commission that it

[3] The CBT task force spent a year developing proposed changes to the contract's specifications. Those recommendations were modified by the CBT's board of directors, and the modified proposal was then defeated by a vote of the CBT membership on October 17, 1996.

[4] A shipping certificate is a negotiable instrument that represents a commitment by the issuer to deliver (e.g., load into a barge) corn or soybeans to the certificate holder pursuant to terms specified by the CBT whenever the holder pursuant to terms specified by the CBT whenever the holder decides to surrender the certificate to the issuer.

[5] A transcript of the meeting has been entered into the Commission's comment file. Participants included a United States Senator, a United States Representative and a state government representative from the state of Ohio; a United States Representative and a state government representative from the state of Michigan; representatives of six commercial users of the contracts; representatives of three producer associations; and six persons representing the CBT.

[6] Subsequently, the Commission also published for public comment notice that it was proposing to disapprove application of the terms proposed by the CBT to the January 1999 soybean futures contract and the March 1999 corn futures contract. 62 FR 5108 (September 30, 1997). The CBT purportedly listed those futures contracts for trading after issuance of the September 15, 1997, proposed order. The comment period on that notice also ended October 22, 1997.

[7] Comments were received by the Commission offering a wide range of opinion. Many took issue with the philosophy underlying the section 5a(a)(10) statutory authority which permits the Commission to order an exchange to change or to supplement contract terms that violate that provision of the Act. Others took issue with the Commission for not proposing additional remedial changes, particularly for the corn contract.

[8] A transcript of the hearing and all attendant written statements and documents have been included in the public comment file of this proceeding.

would submit for Commission review an alternative to the contract terms ordered by the Commission and thereafter submitted draft applications for contract market designation for corn and soybeans, beginning with contract months in the year 2000. The Commission, on December 1, 1997, published in the **Federal Register** notice of the CBT's draft proposal of revised contract terms. 62 FR 63529. The Commission requested comment on five specific issues: (1) whether the deliverable supplies under the CBT draft proposal would meet the requirements of section 5a(a)(10) of the Act; (2) whether the CBT draft proposal's locational price differentials would reflect cash market practice; (3) whether the CBT draft proposal's load-out provision would conform to commercial practice; (4) whether the CBT draft proposal's reimbursement scheme under the contingency plan would reflect commercial practices; and (5) whether the CBT draft proposal's minimum net worth requirements would unduly limit eligibility of firms to become issuers of shipping certificates. 62 FR 63532.[9]

The Commission received twenty-seven comment letters in response to this notice, thirteen of which supported the CBT alternatives. Of the ten comments opposing the CBT alternative, nine questioned the CBT's proposed elimination of Toledo as a delivery point. Three commenters opposed the draft proposal's locational price differentials as not reflective of cash price differentials, and three opposed as too high the net worth requirement for issuers of shipping certificates.[10]

By submission dated March 20, 1998, the CBT amended its applications for designation and provided additional information (1998 proposal). The March 20, 1998 submission modified the draft proposal for the soybean contract by changing the segmentation of delivery zones within the delivery area as proposed, modifying the schedule of locational price differentials applicable to those zones and making the equivalent schedule of locational price adjustments applicable under the contingency delivery plan; modifying the performance requirement for deliverers in the Alton-St. Louis area; and reducing the proposed eligibility requirement for issuers of shipping certificates from a proposed requirement to register for delivery of a minimum of 30 barges to a $5 million minimum net worth requirement.

The Commission has reviewed the CBT's 1998 proposal to determine whether it meets the requirements of the Commission's Order and of the Act and regulations thereunder.[11] The CBT's 1998 proposal differs from the Commission's Order with respect to: (1) the delivery locations for the soybean contract; (2) the locational price differentials for both the soybean and corn futures contract; and (3) for both contracts, the minimum net worth eligibility requirement for issuers of shipping certificates. These differences from the provisions of the Commission's Order are analyzed below.

II. Deliverable Supply

A. The Commission's Order

In determining whether the CBT's first proposal met the requirements of section5a(a)(10) of the Act, the Commission initially assessed whether the available deliverable supplies of the commodity at the delivery points specified by the CBT for all delivery months on the contract would be sufficiently large and available to market participants so that futures deliveries, or the credible threat thereof, could assure an appropriate convergence of cash and futures prices and thereby tend to prevent or to diminish price manipulation, market congestion, and the abnormal movement of the commodity in interstate commerce. 62 FR 60838. The Commission determined the appropriate standard for measuring the adequacy of deliverable supplies under the 1997 proposal by examining the relationship between the level of deliverable stocks for corn and soybeans and the presence of a price premium for the expiring futures month over the next futures month (a price inverse).[12]

Based on an analysis of these relationships, the Commission used as a measure of an inadequate level of deliverable supplies under section 5a(a)(10) deliverable supplies below the level of 2,400 contracts for soybeans and below the level of 3,000 contracts for corn. However, the Commission also noted that a higher level of deliverable supplies historically may, in fact, be necessary to protect against price manipulation. As the Commission explained in its Order, to avoid a repetition of the July 1989 soybean futures contract expiration, when both the Commission and the CBT acted on their belief that a sizable long position posed a significant threat of manipulation, deliverable supplies of at least 4,000 contracts would be necessary. 62 FR 60839. The Commission considered both of these measures, as well as other relevant information, in its analysis of the adequacy of deliverable supply.

Applying these measures of adequacy of deliverable supply to the 1997 proposal,[13] the Commission found that the proposed delivery provisions of the soybean contract ''clearly fail to meet the statutory requirement for adequate levels of deliverable supplies throughout the summer months of July, August, and September * * *.'' 62 FR 60850. As to the CBT proposal for corn, the Commission found that ''gross deliverable supplies throughout the year appear to be adequate except for September'' [14] and that, in light of the other changes and supplements which the Commission was making to the proposal and absent actual trading experience to the contrary, it did not find that additional delivery points for corn were required.

Having found that section 5a(a)(10) of the Act required that delivery points for soybeans be added to those proposed by the CBT in order to increase available deliverable supplies, the Commission supplemented the 1997 by proposal by

[9] By letter to the CBT, dated January 9, 1998, the Commission's Division of Economic Analysis terminated fast-track review of the designation applications. In light of the outstanding Order under section 5a(a)(10), the Commission ruled that these applications are ineligible for fast-track treatment.

[10] An additional four comment letters neither favored nor opposed the specific CBT proposal, but rather addressed other issues.

[11] Section 5(6) conditions designation of a board of trade as a contract market, among other requirements, on the ''governing board * * * making effective the orders issued pursuant to the provisions of section 5a of this Act * * *.'' Accordingly, the Commission has reviewed the proposed applications for designation to determine whether they violate any specific criterion set forth in, or term of, the Order. Where they violate a provision of the Order, the Commission has determined whether amendment of the Order to remove conflicts between the two would be appropriate. In addition, the Commission has reviewed the applications for contract market designation under all of the statutory and regulatory requirements generally applicable to contract market designation.

[12] The Commission explained in the order that: The presence of such a premium is an indication of tight deliverable supplies, potentially creating a price distortion. In situations where limited supplies lead to such a price inverse, futures contracts are significantly vulnerable to price manipulation, market congestion, and the abnormal movement of the commodity in interstate commerce under the terms of section 5a(a)(10), particularly when traders hold large positions. 62 FR 60838.

[13] The Commission's Order at 60839–60850 explains in detail the methodology by which the Commission determined the potentially available gross deliverable supplies of corn and soybeans under the 1997 proposal and the necessary reductions from those gross supplies.

[14] The Commission found that deliverable supplies of corn in September may be further supplemented by new crop production and that, as a transition month, the September contract month would be somewhat less likely to be subject to manipulation than other months. 62 FR 60850.

retaining the existing contract's delivery points. With the addition of the retained delivery locations and other changes and supplements,

potentially available gross deliverable supplies of soybeans are at or above the 2,400-contract level in both July and August during each of the past 11 years and in September during all but one of the 11 years. Indeed, the gross deliverable supplies are also at or above the 4,000-contract level for 25 of the 33 months examined. 62 FR 60854.

The Commission's decision to order that delivery locations be added to the 1997 soybean proposal to increase deliverable supplies was based solely upon its finding that available deliverable supplies would not otherwise meet the levels required by section 5a(a)(10) of the Act. Moreover, the Commission's determination of how to remedy the shortfall in deliverable supplies was narrowly focused. Thus, the Commission did not consider the merits of other possible, but untried delivery locations as a means of increasing deliverable supplies. Instead, the Commission deferred to the CBT's expressed preferences for delivery locations on the contract. Accordingly, the Commission ''accept[ed] the delivery points in the proposal itself as a starting point.'' 62 FR 60854. The Commission next considered delivery points which previously had been chosen and used by the CBT. The Commission found that the existing delivery points of St. Louis and Toledo, ''having been chosen by the CBT as appropriate delivery points for its soybean contract and having been used as delivery points for the contract for a number of years * * *, are feasible, workable and acceptable.'' *Id.* Finally, the Commission noted that, ''the CBT continues to be free to indicate by proposed rule or petition that its business preference for delivery locations is otherwise, and the Commission would consider such a new proposal * * *.'' *Id.* at n. 39.

B. Adequacy of the 1998 Proposal's Delivery Points.

The 1998 proposal for the CBT's soybean futures contract would omit Toledo as a delivery point and would add the southern Illinois River from Pekin south to river's mouth at Grafton as a delivery point.[15] The CBT supports its proposal on the grounds that the delivery area ''represent[s] the major markets along the Illinois Waterway, including Burns Harbor, IN and in St. Louis, Missouri.'' (CBT December 17, 1997, submission at 16.) The CBT proposal contains a total of 46 potential shipping stations with a cumulative daily barge loading capability of 145 barges—about 1,627 contracts (8,134,000 bushels) of soybeans—located within the proposed delivery areas for the soybean futures contract. (CBT January 23, 1998, submission, Table 1.) The CBT maintains that based on the analysis used by the Commission in its Order, available deliverable supply levels under its 1998 proposal ''meet the statutory requirements and benchmarks'' of the Order for the critical summer months of July, August and September. (CBT December 17, 1997, submission at 16.)

The following chart details gross deliverable soybean supplies attributable to firms eligible to issue shipping certificates available from the 1998 proposed delivery areas for the critical contract months of July, August and September.

BILLING CODE 6351–01–M

[15] The CBT's proposed delivery locations for corn are the same as in the Commission's Order.

Soybeans -- Gross Deliverable Supplies for July, August and September Under the 1998 CBT Proposal, Eligible Firms

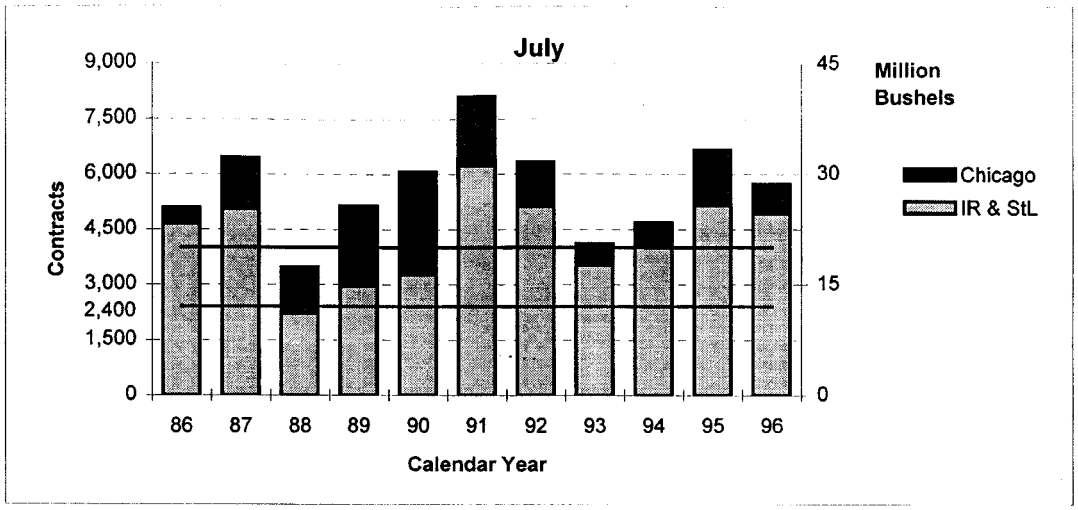

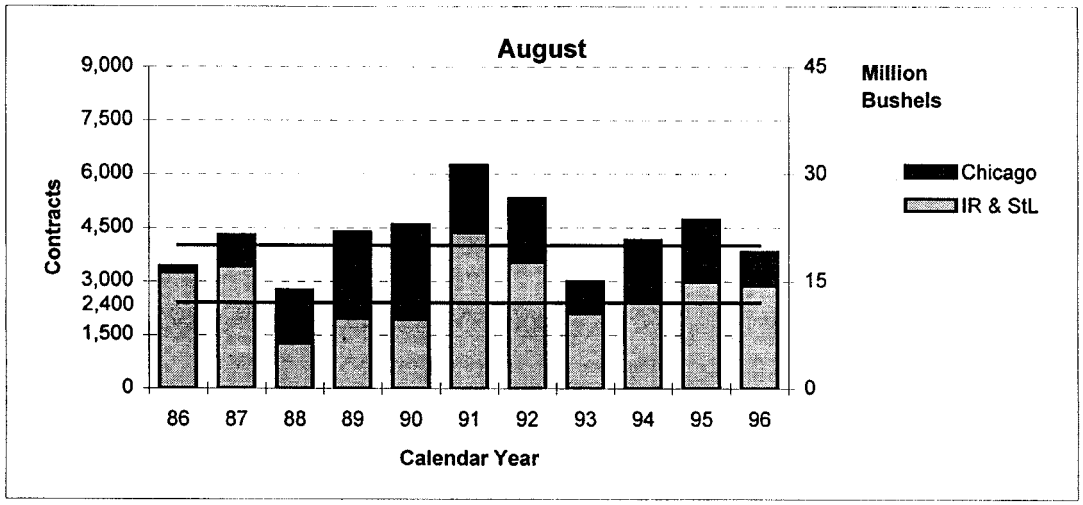

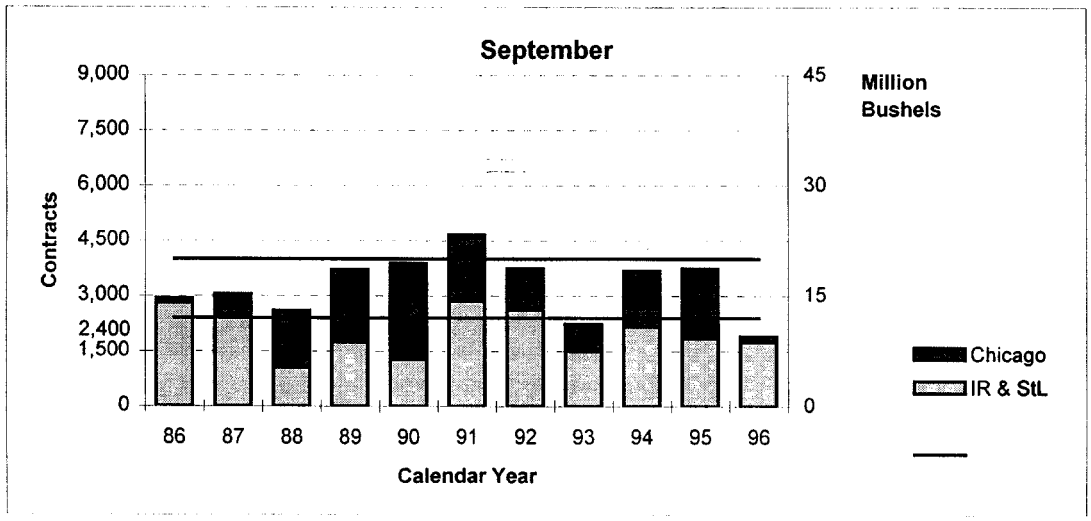

BILLING CODE 6351–01–C

Such estimated gross deliverable supplies for eligible firms exceeded the Commission's benchmark levels of 2,400 contracts in each of the past eleven years during July and August.[16] They reached or exceeded the 4,000 contract benchmark level in ten of eleven years during July and in seven of eleven years during August.[17]

The estimated gross deliverable soybean supplies for September meet the level of 2,400 contracts in nine of the eleven years. However, they meet the 4,00 contract level in only one of eleven years. As noted in the Order, deliverable supply concerns for September may be mitigated by the availability of new crop production in that month and the imminent harvest of even greater supplies in October. In particular, as shown in Table 1, estimated September soybean production in areas immediately adjacent to the proposed delivery area ranged from 1,636 contracts in 1996 to 14,623 contracts in 1994. These amounts are greater for soybeans than under the Commission's Order (compare 62 FR 60847) because the 1998 proposal expanded delivery locations along the Illinois River, a major production area. It reasonably can be expected that some portion of this September soybean production would potentially be deliverable on the September futures contract within normal commercial marketing channels. As a result, it is likely that the level of gross deliverable supplies available in September would be somewhat higher than the above estimates.

TABLE 1.—ESTIMATED SOYBEAN PRODUCTION LOCATED NEAR PROPOSED DELIVERY POINTS AS OF SEPTEMBER 30

[In 5,000 bushel contract units]

Crop year	Soybeans
1986	5,608
1987	10,622
1988	8,527
1989	8,606
1990	3,416
1991	12,972
1992	5,721
1993	2,263
1994	14,623
1995	7,258
1996	1,636

*The production as of September 30 of each year was estimated by multiplying U.S. Department of Agriculture harvesting progress estimates for the Illinois and Indiana crop reporting districts adjacent to the proposed delivery points by U.S.D.A. production data for counties located within about 25 miles of the proposed delivery points.

The potentially available gross deliverable supplies must be reduced, however, by the following factors identified in the Order and which remain applicable here: (1) Continuing reliance, impart, on Chicago as a source of deliverable supplies; (2) a three-business-day barge queuing and priority load-out requirement; and (3) prior commercial commitments of available supplies.[18]

a. Reliance on Chicago

To the extent that potentially available gross deliverable supplies of soybeans have reached or exceeded the 2,400 and 4,000 contract levels, they have frequently depended on Chicago supplies to do so. During July, deliverable supplies from locations other than Chicago reached or exceeded the 2,400 level in ten, and reached or exceeded the 4,000 level in six, of the eleven years analyzed. During August, deliverable supplies from locations other than Chicago reached or exceed the 2,400 contract level in seven, and the 4,000 contract level in one, of the years analyzed. For September, deliverable supplies from locations other than Chicago reached or exceeded the 2,400 contract level in four of the eleven years and never reached the 4,000 contract level during this period.

The 1998 proposal's reliance on Chicago deliverable supplies to meet the Commission's benchmark levels may result in future shortfalls. As the Commission's Order stated:

> Cash market activity in Chicago is likely to continue its historical decline. While the estimation procedure for gross deliverable supplies used in this analysis tried to correct for the precipitous decline of the cash market in Chicago by using 100 percent of the current capacity as a constraint on past supplies, that method certainly overstates the actual deliverable supplies that may originate form Chicago in the future. Chicago elevators fro many years have held stocks well below their maximum capacity levels, particularly in the critical summer months. * * * Chicago supplies will most likely be reduced significantly in the future and would not be available insignificant quantities under the CBT proposal.

62 FR 60850.

b. The Three-Day Barge Queuing and Priority Load-Out Requirements

The 1998 proposal retains the provisions of the 1997 proposal requiring a shipping certificate issuer to begin loading onto the certificate holder's barges within three business days after receiving instructions and the holder's barges are at the delivery facility ready to load. As the commenters to the 1997 proposal made clear, requiring the shipping certificate issuer to give preference to shipping certificate holders over customers and proprietary business for eight hours of load-out capacity per day is contrary to cash market practice. The Order questioned the merits of the CBT's justification of this provision, which merely assumes that issuers would be willing and able to meet this requirement and accommodate their cash business simply by extending their

[16] The gross deliverable supply estimates were derived using the same procedures as were used to calculate the estimates for the Commission's final order. Specifically, for the Illinois River and St. Louis, supplies for each contract month were estimated by summing barge shipments for that month and all subsequent months of the crop year (ending with September), with adjustments being made to exclude new crop shipments during September. For Chicago, the estimates were calculated as the sum of stocks available at the beginning of the contract month plus receipts during the month, with adjustments being made to reflect the recent sharp decline in storage capacity at Chicago. The gross deliverable supply estimates for eligible firms were further adjusted to reflect only barge shipments from the Illinois River and St. Louis by the eight firms believed to be capable of meeting the CBT's proposed $5 minimum net worth requirement.

The term ''gross deliverable supplies'' reflects the fact that these are estimates of the maximum level of deliverable supplies likely to be available for the futures contracts before any adjustment is made for other factors that are likely to reduce deliverable supplies. These factors, discussed in more detail below, include the 1998 proposal's continued reliance on Chicago as a source of deliverable supplies, the proposed three-day barge queuing and priority load-out requirements, and prior commercial commitments of available supplies. A detailed description of the estimation procedure is presented in the Commission's Order.

[17] The Commission also estimated gross deliverable supplies for all firms, including those which are not expected to be able to meet the CBT's proposed minimum net worth eligibility requirement of $5 million, These estimates reflect total shipments from the Illinois River and St. Louis, and were analyzed because it is likely that at least part of the soybeans shipped by the smaller, ineligible firms readily could be diverted to eligible delivery facilities for futures delivery purposes at economic prices and, thus, should be regarded as part of the contract's deliverable supply. The all-firms estimates have not been included in this Order because they result in levels which are only marginally greater than those for eligible-firms and exhibit essentially the same results as do the eligible-firm estimates when measured against the Commission's benchmark standards. However, in a few years particularly during the month of September, the addition of minor amounts of deliverable supplies from ineligible firms results in estimates which exceed a benchmark level which did not otherwise do so. Specifically, the all-firms estimates exceeded the 2,400 threshold when eligible firm estimates did not in September 1993 and the 4,000 threshold in September 1990, 1994 and 1995.

[18] Other factors affecting deliverable supplies identified in the Commission's Order included locational price differentials and foreseeable disruptions in barge shipping on the Illinois River. However, as discussed below, the 1998 proposal satisfactorily addresses these factors.

hours of operation. The Commission finds here, as it did in its prior Order, that:

> While the effect of the proposed loading requirements on the willingness of issuers to issue shipping certificates for futures delivery is difficult to measure in advance, it represents a significant departure from cash market practice and most likely would reduce the amount of gross deliverable supplies.

62 FR 60850.

c. Prior Commercial Commitments of Stocks for Shipment

An additional factor which would reduce the above estimates of gross deliverable supplies is prior commitment of stocks for shipment. As the Order reasoned, ''determining deliverable supplies on the basis of shipment information does not make necessary deductions for that amount of the shipments which would be unavailable for futures delivery because they were otherwise committed and because no substitution was possible at an equivalent market price.'' 62 FR 60850. When such committed stocks are removed from total shipments, ''it is likely that the actual available deliverable supplies for the futures contracts would be significantly less than indicated by the above gross estimates.''

d. Conclusion

In summary, under the 1998 proposal gross deliverable supplies for soybeans during the months of July and August reach or exceed the 2,400 contract benchmark in every year, and the 4,000 contract benchmark in most years. Although the estimates for gross deliverable supplies during September failed to reach the 2,400 contract benchmark level in two of the past eleven years and failed to reach the 4,000 contract level in all years but one, those estimates may be supplemented by new crop production in September. Overall, the number of contract months for which estimated gross deliverable supplies of soybeans under the 1998 proposal would have reached or exceeded benchmark levels compares favorably with the number of contract months reaching or exceeding the benchmark levels under the Commission's Order for soybeans (and for corn). On this basis, the Commission does not find soybean deliverable supplies to be so inadequate as to require delivery points additional to, or different from, those proposed by the CBT.

However, in light of the reductions from gross deliverable supplies that may result from prior commercial commitments and the contract's three-business-day load requirement, the extent to which available deliverable supplies actually would meet or exceed the Commission's deliverable supply standards is uncertain. Equally uncertain is whether future available deliverable supplies would meet or exceed the Commission's deliverable supply standards. This will depend in part upon the degree to which Chicago remains a viable source of deliverable supplies of soybeans or upon growth in the other delivery areas sufficient to compensate for declining activity in Chicago. Because only actual trading experience will reveal whether the level of available deliverable supplies meets the requirements of section 5a(a)(10) of the Act, the Commission directs the CBT to report on the actual delivery and contract expiration experience on an annual basis for the first five years after contract expirations begin under the revised soybean contract.[19] These reports will allow the Commission to revisit the issue of adequacy of available deliverable supplies in the future if actual experience with the contract suggests that such supplies are not adequate.

III. Differentials

A. The Commission's Order

The Commission's Order found that, in light of the significant locational price differences in the cash market among the proposed delivery locations, section 5a(a)(10) required setting differentials for the delivery locations on the corn and soybean futures contracts. Specifically, the Order found that:

> the cash market on the northern Illinois River clearly reflects a unidirectional flow of corn and soybeans and exhibits significant locational price differences at the proposed delivery points which have a stable relationship with one another. The failure of the CBT proposal to provide for locational price differentials reflecting the cash market not only would reduce available deliverable supplies on the contracts, but would result in price distortions and susceptibility to price manipulation, market congestion, and the abnormal movement of corn and soybeans.

62 FR 60851.

The Commission's Order found that cash market differences in the value of corn and soybeans for various delivery points on the northern Illinois River are based primarily upon the cost of barge freight to the Gulf of Mexico. Based on Commission policy requiring that locational price differentials on futures contracts be set within the range of commonly observed or expected commercial price differences, the Order found that 150 percent of the Waterways Freight Bureau Tariff No. 7 rate ''provides an appropriate basis for the differential.''[20] The percentage of tariff specified by the Order (150%) was based on analysis of barge freight rates for Illinois River shipments for the period 1990 through 1996. The Order found that 150% of tariff ''is well within the range of commonly observed freight rates and closely approximates the average percent of tariff quoted by barge companies for Illinois River shipments,'' particularly during the critical summer months. 62 FR 60856.

The Order also changes and supplemented the differential provided under a proposed contingency plan to take effect during times when river traffic is obstructed to make it consistent with the differentials in effect at other times. The Commission's Order found that obstructions of river traffic caused by adverse weather conditions or announced lock repair and maintenance were commonplace and that ''it is not an appropriate use of exchange emergency authority to address such foreseeable disruptions to the operation of contract terms.'' 62 FR 60853. Accordingly, the Commission found further that, because ''prolonged obstruction of transportation on the river would increase the susceptibility of the futures contract to manipulation by issuers,'' section 5a(a)(10) required a ''contingency plan'' rule for the proposed contract. *Id*.

The Order found that the contingency plan proposed by the CBT fell short of achieving the statutory objectives in a number of ways, including its computation of the reimbursement in transportation costs for deliveries at

[19] This is consistent with the Commission's direction to the CBT in the Order to report on the delivery experience in corn. That requirement was grounded in the Commission's finding that deliverable supplies of corn under the CBT's 1997 proposal were not so inadequate to require additional delivery points under section 5a(a)(10). Inasmuch as the 1997 and 1998 proposals for delivery points for corn are the same, that finding and the Commission's direction to file annual reports for five years has not been modified by this order.

[20] Chicago and Toledo were ordered to be valued at par.

Percent of tariff is a common means of quoting freight prices and is used extensively in cash market trading. The Waterways Freight Bureau Tariff No. 7 specifies the cost per ton of shipping commodities via barge to New Orleans from specified river segments (barge tariff zones) on the Illinois, Mississippi and Ohio Rivers. This tariff schedule was issued by the Interstate Commerce Commission in 1976 as part of its regulatory program for barge freight rates. Although this tariff schedule no longer serves a regulatory purpose, the barge industry routinely quotes barge freight rates as a percentage of the tariff schedule.

alternative locations when the contingency plan was in effect based upon 100 percent of the Waterways Freight Bureau Tariff No. 7 barge freight rate schedule. This rate would have been different from the rate found by the Commission to be appropriate at all other times. The Commission found that, ''the application of different differentials to the contracts, depending upon whether deliveries were subject to the contingency rule or to normal delivery procedures, could also contribute to price manipulation, market congestion, or the abnormal movement of commodities in interstate commerce.'' 62 FR 60852.

B. Adequacy of the 1998 Proposal's Differentials

The 1998 proposal differs from the Order in the amount of the locational price differentials specified for the corn and soybean futures contracts. The CBT proposes to substitute the following locational differentials for those ordered by the Commission:

TABLE 2.—THE PROPOSED LOCATIONAL PRICE DIFFERENTIALS FOR THE SOYBEAN AND CORN FUTURES CONTRACTS IN CENTS PER BUSHEL

Location	Soybean differential	Corn differential
Chicago	par	par.
Lockport to Seneca	+2 cents	+2 cents.
Ottawa to Chillicothe	+2.5 cents	+2.5 cents.
Peoria to Pekin	+3 cents	+3 cents.
Havana to Grafton	+3.5 cents	Not applicable.
St. Louis/East St. Louis/Alton	+6 cents	Not applicable.

In support of its proposal, the CBT states that, ''Statistics using barge freight rate differentials and F.O.B. shipping station minus F.O.B. Chicago differentials during the period from 1990–1996 show that the proposed locational differentials are also within the range of commonly observed commercial barge and price differences.'' (CBT January 23, 1998, submission at 2.)

To determine whether the CBT's proposed differentials fall within the range of commonly observed or expected commercial price differences, the Commission analyzed the frequency of opportunities for economic delivery from each delivery location at the specified differential. Deliveries from a location would most likely be made when the relative difference in the cost of barge freight between Chicago and the delivery point to New Orleans is equal to or less than the differential specified in the futures contract for that location. The Commission estimated the cost of barge freight using data on weekly offers for freight for the period of January 1990 through October 1997.

Significantly, during the critical summer months of July and August (but not September),[21] the 1998 proposed differentials for most delivery locations clearly fall at or above the mid-point of estimated cash price differences. Accordingly, the 1998 proposed differentials based on the estimated cost of freight would result in relatively frequent opportunities for economic delivery—generally exceeding 50 percent of the observations—during July and August for most locations. The opportunities for economic delivery at some locations would be less frequent, however, at times of the year other than during the summer months, but overall deliverable supplies are greater at those times. For the period January 1990 through October 1997, the relative estimated frequency with which economic delivery likely would be feasible from the majority of locations generally exceeded 30 percent.[22] Accordingly, the CBT's proposed differentials reasonably can be expected to fall within the range of commonly observed or expected commercial price differences and thus tend to prevent or diminish price manipulation, market congestion, or the abnormal movement of the commodities in interstate commerce.

However, the delivery locations of Peoria-Pekin for corn and soybeans, and Havana-Grafton for soybeans, appear to fall at the low end of the range of estimated barge freight differences. In light of the variation among river segments in the estimated frequency of opportunities for economic deliveries from the various locations, the Commission directs the CBT to report annually for a period of five years on the extent to which particular locational price differentials may discourage or encourage deliveries to be made from that location. This report should compare rates of delivery by river segment to the applicable differentials, focusing with particularlity on September deliveries from all locations and on deliveries from the Peoria-Pekin and Havana-Grafton river segments year-round. Such reporting will allow the Commission to revisit the issue of adequacy of locational differentials if actual experience with the contracts suggests that the differentials are not adequate.

C. Contingency Plan Differentials

The 1998 proposal's contingency plan differs from the Commission's Order in the method of calculating the appropriate reimbursement for the change in transportation cots for deliveries at alternative locations when the contingency plan is in effect. The Order specified that the contingency plan reimbursement be calculated by reference to the same differentials between delivery locations required under the Order to be applicable under normal (non-contingency) conditions. The 1998 proposal modifies the reimbursement calculation and changes the amount of the contingency plan differentials to conform them to the proposed cents per bushel differentials generally applicable under the 1998 proposal to the contracts. This change is

[21] This result is due to the substantial increases in barge freight rates that are commonly observed beginning in September caused by the increasing demand for shipping as the harvest season begins. The Commission considers the lower frequency with which the future contract's differentials will be at or above cash price freight differentials to be of less regulatory concern in September than at other times of the year. The seasonal movement of abundant supplies for shipment in commercial channels from all delivery locations reduces the likelihood that the proposed differentials would lead to the prohibited effects under section 5a(a)(10).

[22] As noted above, the barge industry routinely quotes freight rates as a percentage of the tariff schedule. As a consequence of this pricing convention, the relative cost of shipping among various river locations at any one time is stable. However, barge freight rates (quoted as a percent of the tariff schedule) fluctuate over time in response to increases or decreases in supply and demand for barge shipping. The proposed CBT differentials which are specified in cents-per-bushel at half-cent intervals do not translate precisely to a uniform percentage of tariff. Accordingly, as barge freight rates rise and fall in relation to the futures contracts' fixed locational differentials, the frequency with which deliveries would be made would vary somewhat from one location to another.

consistent with the Commission's Order in that the relative value of locational differentials during normal conditions is maintained during times when the contingency plan is in effect.

IV. Minimum Net Worth Requirement

A. The Commission's Order

The Commission's Order also eliminated a proposed $40 million net worth requirement for eligibility of shipping certificate issuers. Section 15 of the Act requires the Commission, when considering exchange rule proposals or amendments, to consider the public interest to be protected by the antitrust laws and to endeavor to take the lease anticompetitive means of achieving the objectives of the Act.[23] Accordingly, as the Commission stated in the Order, ''the CBT proposal's possible anticompetitive effects must be evaluated against its potential effectiveness in achieving the policies and purposes of the Act.'' 62 FR 60853.

The Order found that the $40 million minimum net worth requirement would limit issuance of shipping certificates to four of seven grain firms with shipping stations in the delivery area, result in an extremely high level of concentration, increase the Herfindahl-Hirschman Index (HHI) to 3,300 (an increase of 530 points over the current delivery system), and act as a barrier to new entrants. 62 FR 60853. Although protecting the financial integrity of the delivery process is a reasonable objective, the Order concluded that the CBT failed to provide a reasonable justification for the $40 million minimum net worth requirement in light of the 1997 proposal's other proposed financial integrity measures.[24] 62 FR 60857. Accordingly, the Commission eliminated the $40 million minimum net worth eligibility requirement, finding that it would have resulted in a high level of concentration and imposed a substantial and impermissible bar to entry to otherwise eligible firms without a demonstrated regulatory need for the requirement. 62 FR 60857.

B. The 1998 Net Worth Proposal

The 1998 proposal would restore a net worth eligibility requirement for shipping certificate issuers in the amount of $5 million. As under the 1997 proposal, this requirement is in addition to the other financial guarantees and conditions relating to working capital, letters of credit and a variable net worth requirement related to the value of outstanding shipping certificates. The CBT supports the requirement on the grounds that:

> The Exchange is responsible for ensuring the financial integrity of the delivery process through the specification of minimum financial requirements. Currently, the Exchange requires that firms approved as regular for delivery in the agricultural markets have a minimum net worth equal to $5,000 per contract of regular capacity. Firms which are regular for delivery on the grain contracts must also meet minimum working capital and performance bonding requirements based on their federally licensed storage capacity.
>
> In order to ensure the financial, operation, and administrative integrity of the shipping certificate delivery process, all market participants must view all certificates as equally fungible and be indifferent between issuers. Certificates issued by low net worth firms have several distinct disadvantages, particularly, a higher risk of default and lower operational efficiencies due to fewer shipping station locations, and therefore, potentially higher costs to the taker in assembling the minimum number of certificates necessary to load a barge. Furthermore, the cumulative contribution of low net worth firms does not substantially increase deliverable supply.

CBT March 20, 1998, submission at 4.

Section 15 of the Act requires that the Commission evaluate the 1998 proposal's anticompetitive effects against its effectiveness in achieving the policies and purposes of the Act. The effect of the proposed $5 million net worth requirement would be to limit issuance of shipping certificates to firms able to meet the requirement. However, the $5 million net worth requirement constitutes a far lower barrier to entry than did the 1997 proposal's $40 million requirement, which as the Order found, would have limited participation to ''four large grain firms.'' In contrast, for the corn futures contract, under a $5 million net worth requirement, five of the seven firms operating barge-loading facilities on the northern Illinois River potentially qualify for eligibility as shipping certificate issuers. For the soybean futures contract, eight of the eleven barge-loading firms operating on the Illinois River and at St. Louis would meet this eligibility requirement.[25] The proposed $5 million net worth requirement would constitute a lower barrier to entry. It also would have a more modest effect on reducing deliverable supplies for the futures contracts. United States Army Corps of Engineers' data for the 1995–96 crop year indicates that eligible firms shipped about 95 percent of all corn and soybeans from the proposed delivery areas.

Balanced against its anticompetitive effect, the $5 million net worth requirement may serve the regulatory purpose of increasing the efficiency of the contract's delivery mechanism.[26] Delivery takers are expected to attempt to reduce their costs by assembling the requisite number of shipping certificates from a single delivery facility to fill a barge. (A barge with a 55,000 bushel capacity will require assembly of 11-5,000 bushel certificates for delivery.) However, the smallest firms may not qualify to issue sufficient certificates for economically efficient consolidation and assembly.[27] Moreover, the $5 million net worth requirement may significantly reduce the CBT's administrative burden related to monitoring the financial status of eligible shipping certificate issuers on an on-going basis. Small, less financially secure firms likely would require more careful monitoring than financially stronger firms.

For the above reasons, the Commission finds that the anti-competitive effect of the $5 million proposed net worth eligibility requirement is not so great as to outweigh the regulatory purpose identified by the CBT and that its approval by the Commission is not contrary to section 15 of the Act.

Accordingly, for the reasons discussed above, the Commission grants the CBT applications for designation for futures contracts in corn and soybeans submitted on December 17, 1997, as supplemented on March 19, 1998, and amends its Order of November 9, 1997, as applicable to such contracts so as to be consistent with this action.

It is further ordered that this grant of designation shall be subject to CBT's

---

[23] *British American Commodity Options Corp.* v. *Bagley,* [1975–1977 Transfer Binder] Comm. Fut. L. Rep. (CCH) ¶ 20,245 at 21,334 (S.D.N.Y. 1976), *aff'd in part and rev'd in part on other grounds,* 552 F. 2d. 282 (2d. Cir. 1977), *cert. denied,* 434 U.S. 938 (1977).

[24] These additional financial integrity provisions included the requirement that issuers of certificates obtain an irrevocable letter of credit in an amount equal to the value of their delivery commitments, maintain a minimum of two million dollars in working capital and be limited to issuing certificates of a value no greater than 25 percent of the issuer's net worth.

[25] As a result of this lower barrier to entry as well as the other changes, the resulting HHI declined from 3,300 under the 1997 soybean proposal to 2,918 under the 1998 proposal and for the corn proposals from 3,300 to 2,762.

[26] Protecting the integrity of the delivery process is a fundamental objective of the Act. *See, e.g.,* Sections 5a(a), 5a(a)(3), 5a(a)(4), 5a(a)(5), 5a(a)(7), and 5a(a)(10) of the Act. In particular, section 5a(a)(7) of the Act specifically recognizes that contract markets may impose reasonable requirements ''as to location, accessibility and suitability for warehousing and delivery purposes. * * *''

[27] The issuer must limit the value of its outstanding certificates to one-quarter of its net worth.

compliance with all sections of the Act applicable to the CBT as a contract market under the Act.

Dated: May 7, 1998.

By the Commission.

Jean A. Webb,

Secretary of the Commission.

The Commission has determined that publication of the Order will provide notice to interested members of the public of its action, is consistent with the Commodity Exchange Act and is in the public interest.

Issued in Washington, DC, this 7th day of May 1998, by the Commodity Futures Trading Commission.

Jean A. Webb,

Secretary of the Commission.

[FR Doc. 98–12664 Filed 5–12–98; 8:45 am]

BILLING CODE 6351–01–M

CONSUMER PRODUCT SAFETY COMMISSION

Sunshine Act Meeting

AGENCY: U.S. Consumer Product Safety Commission, Washington, DC 20207.

"FEDERAL REGISTER" CITATION OF PREVIOUS ANNOUNCEMENT: [Vol. 63, No. 74/Friday, April 17, 1998/19245].

PREVIOUSLY ANNOUNCED TIME AND DATE OF MEETING: 10:00 a.m., Thursday, May 21, 1998.

CHANGES IN MEETING: The time has changed from 10:00 a.m. to 2:00 p.m. for the Commission Agenda and Priorities public hearing.

For a recorded message containing the latest agenda information, call (301) 504–0709.

CONTACT PERSON FOR ADDITIONAL INFORMATION: Sadye E. Dunn, Office of the Secretary, 4330 East West Highway, Bethesda, MD 20207 (301) 504–0800.

Dated: May 8, 1998.

Todd A. Stevenson,

Deputy Secretary.

[FR Doc. 98–12794 Filed 5–8–98; 4:33 pm]

BILLING CODE 6355–01–M

DEPARTMENT OF DEFENSE

Office of the Secretary

Defense Intelligence Agency, Joint Military Intelligence College: Notice of Closed Meeting

SUMMARY: Pursuant to the provisions of Subsection (d) of Section 10 of Public Law 92–463, as amended by Section 5 of Public Law 94–409, notice is hereby given that a closed meeting of the DIA Joint Military Intelligence College Board of Visitors has been scheduled as follows:

DATES: Monday, 8 June 1998, 0800 to 1800; and Tuesday, 9 June 1998, 0800 to 1200.

ADDRESSES: Joint Military Intelligence College, Washington, DC 20340–5100.

FOR FURTHER INFORMATION CONTACT: Mr. A. Denis Clift, President, DIA Joint Military Intelligence College, Washington, DC 20340–5100 (202/231–3344).

SUPPLEMENTARY INFORMATION: The entire meeting is devoted to the discussion of classified information as defined in Section 552b(c)(1), Title 5 of the U.S. Code and therefore will be closed. The Board will discuss several current critical intelligence issues and advise the Director, DIA, as to the successful accomplishment of the mission assigned to the Joint Military Intelligence College.

Dated: May 6, 1998.

L.M. Bynum,

Alternate OSD Federal Register Liaison Officer, Department of Defense.

[FR Doc. 98–12684 Filed 5–12–98; 8:45 am]

BILLING CODE 5000–04–M

DEPARTMENT OF DEFENSE

Office of the Secretary

Defense Intelligence Agency, Science and Technology Advisory Board Closed Panel Meeting

AGENCY: Department of Defense, Defense Intelligence Agency.

ACTION: Notice.

SUMMARY: Pursuant to the provisions of Subsection (d) of Section 10 of Public Law 92–463, as amended by Section 5 of Public Law 94–409, notice is hereby given that a closed meeting of the DIA Science and Technology Advisory Board has been scheduled as follows.

DATES: 20 and 21 May 1998 (800am to 1600pm).

ADDRESSES: The Defense Intelligence Agency, Bolling AFB, Washington, DC 20340–5100.

FOR FURTHER INFORMATION CONTACT: Maj Michael W. Lamb, USAF, Executive Secretary, DIA Science and Technology Advisory Board, Washington, DC 20340–1328 (202) 231–4930.

SUPPLEMENTARY INFORMATION: The entire meeting is devoted to the discussion of classified information as defined in Section 552b(c)(I), Title 5 of the U.S. Code and therefore will be closed to the public. The Board will receive briefings on and discuss several current critical intelligence issues and advise the Director, DIA, on related scientific and technical matters.

Dated: May 6, 1998.

L.M. Bynum,

Alternate OSD Federal Register Liaison Officer, Department of Defense.

[FR Doc. 98–12685 Filed 5–12–98; 8:45 am]

BILLING CODE 5000–04–M

DEPARTMENT OF DEFENSE

Office of the Secretary

Defense Intelligence Agency, Science and Technology Advisory Board Closed Panel Meeting

AGENCY: Department of Defense, Defense Intelligence Agency.

ACTION: Notice.

SUMMARY: Pursuant to the provisions of Subsection (d) of Section 10 of Public Law 92–463, as amended by Section 5 of Public Law 94–409, notice is hereby given that a closed meeting of the DIA Science and Technology Advisory Board has been scheduled as follows:

DATES: 28 May 1998 (800am to 1600pm).

ADDRESS; The Defense Intelligence Agency, Bolling AFB, Washington, DC 20340–5100.

FOR FURTHER INFORMATION CONTACT: Maj. Michael W. Lamb, USAF, Executive Secretary, DIA Science and Technology Advisory Board, Washington, D.C. 20340–1328 (202) 231–4930.

SUPPLEMENTARY INFORMATION: The entire meeting is devoted to the discussion of classified information as defined in Section 552b(c)(1), Title 5 of the U.S. Code and therefore will be closed to the public. The Board will receive briefings on and discuss several current critical intelligence issues and advise the Director, DIA, on related scientific and technical matters.

Dated: May 6, 1998.

L.M. Bynum,

Alternate OSD Federal Register Liaison Officer, Department of Defense.

[FR 98–12686 Filed 5–12–98; 8:45 am]

BILLING CODE 5000–04–M

DEPARTMENT OF DEFENSE

Office of the Secretary; Defense Policy Board Advisory Committee

AGENCY: Department of Defense.

ACTION: Notice of Advisory Committee Meeting.

SUMMARY: The Defense Policy Board Advisory Committee will meet in closed session from 8 am until 6, pm, 19 June 1998 in the Pentagon, Washington, DC.

The mission of the Defense Policy Board is to provide the Secretary of Defense, Deputy Secretary of Defense and the Under Secretary of Defense for Policy with independent, informed advice and opinion concerning major matters of defense policy. At this meeting the Board will hold classified discussions on national security matters.

In accordance with Section 10(d) of the Federal Advisory Committee Act, Public Law 92–463, as amended [5 U.S.C. App. II, (1982)], it has been determined that this Defense Policy Board meeting concerns matters listed in 5 U.S.C. 552b(c)(1)(1982), and that accordingly this meeting will be closed to the public.

Dated: May 6, 1998.

L.M. Bynum,

Alternate OSD Federal Register Liaison Officer, Department of Defense.

[FR Doc. 98–12688 Filed 5–12–98; 8:45 am]

BILLING CODE 5000–04–M

DEPARTMENT OF DEFENSE

Office of the Secretary, Department of Defense Wage Committee; Notice of Closed Meetings

Pursuant to the provisions of section 10 of Public Law 92–463, the Federal Advisory Committee Act, notice is hereby given that closed meetings of the Department of Defense Wage Committee will be held on June 2, 1998; June 9, 1998; June 16, 1998; June 23, 1998; and June 30, 1998, at 10:00 a.m. in Room A105, The Nash Building, 1400 Key Boulevard, Rosslyn, Virginia.

Under the provisions of section 10(d) of Public Law 92–463, the Department of Defense has determined that the meetings meet the criteria to close meetings to the public because the matters to be considered are related to internal rules and practices of the Department of Defense and the detailed wage data to be considered were obtained from officials of private establishments with a guarantee that the data will be held in confidence.

However, members of the public who may wish to do so are invited to submit material in writing to the chairman concerning matters believed to be deserving of the Committee's attention.

Additional information concerning the meetings may be obtained by writing to the Chairman, Department of Defense Wage Committee, 4000 Defense Pentagon, Washington, DC 20301–4000.

Dated: May 6, 1998.

L.M. Bynum,

Alternate OSD Federal Register Liaison Officer, Department of Defense.

[FR Doc. 98–12687 Filed 5–12–98; 8:45 am]

BILLING CODE 5000–04–M

DEPARTMENT OF EDUCATION

Submission for OMB Review; Comment Request

AGENCY: Department of Education.

ACTION: Submission for OMB review; comment request.

SUMMARY: The Acting Deputy Chief Information Officer, Office of the Chief Information Officer, invites comments on the submission for OMB review as required by the Paperwork Reduction Act of 1995.

DATES: Interested persons are invited to submit comments on or before June 12, 1998.

ADDRESSES: Written comments should be addressed to the Office of Information and Regulatory Affairs, Attention: Danny Werfel, Desk Officer, Department of Education, Office of Management and Budget, 725 17th Street, NW., Room 10235, New Executive Office Building, Washington, DC 20503. Requests for copies of the proposed information collection requests should be addressed to Patrick J. Sherrill, Department of Education, 600 Independence Avenue, S.W., Room 5624, Regional Office Building 3, Washington, DC 20202–4651.

FOR FURTHER INFORMATION CONTACT: Patrick J. Sherrill (202) 708–8196. Individuals who use a telecommunications device for the deaf (TDD) may call the Federal Information Relay Service (FIRS) at 1–800–877–8339 between 8 a.m. and 8 p.m., Eastern time, Monday through Friday.

SUPPLEMENTARY INFORMATION: Section 3506 of the Paperwork Reduction Act of 1995 (44 U.S.C. Chapter 35) requires that the Office of Management and Budget (OMB) provide interested Federal agencies and the public an early opportunity to comment on information collection requests. OMB may amend or waive the requirement for public consultation to the extent that public participation in the approval process would defeat the purpose of the information collection, violate State or Federal law, or substantially interfere with any agency's ability to perform its statutory obligations. The Acting Deputy Chief Information Officer, Office of the Chief Information Officer, publishes this notice containing proposed information collection requests prior to submission of these requests to OMB. Each proposed information collection, grouped by office, contains the following: (1) Type of review requested, e.g., new, revision, extension, existing or reinstatement; (2) Title; (3) Summary of the collection; (4) Description of the need for, and proposed use of, the information; (5) Respondents and frequency of collection; and (6) Reporting and/or Recordkeeping burden. OMB invites public comment at the address specified above. Copies of the requests are available from Patrick J. Sherrill at the address specified above.

Dated: May 7, 1998.

Hazel Fiers,

Acting Deputy Chief Information Officer, Office of the Chief Information Officer.

Office of Educational Research and Improvement

Type of Review: Revision.

Title: Application for Grants Under the Eisenhower Federal Activities Program.

Frequency: Annually.

Affected Public: Businesses or other for-profits; Not-for-profit institutions; State, local or Tribal Gov't, SEAs or LEAs.

Reporting Burden and Recordkeeping:
Responses: 1,000.
Burden Hours: 40,000.

Abstract: Eisenhower Federal Activities is a discretionary grants program that supports activities of national significance that will contribute to the development and implementation of high-quality professional development in the core academic subjects.

This information collection is being submitted under the Streamlined Clearance Process for Discretionary Grant Information Collections (OMB Control No. 1890–0001). Therefore, this 30-day public comment period notice will be the only public comment notice published for this information collection.

[FR Doc. 98–12641 Filed 5–12–98; 8:45 am]

BILLING CODE 4000–01–P

DEPARTMENT OF ENERGY

Notice of Solicitation for the Development of Centers of Automotive Technology Excellence Under the Graduate Automotive Technology Education (GATE) Program, Financial Assistance Solicitation No. DE–SC02–98EE50519

AGENCY: Chicago Operations Office, DOE.

ACTION: Notice of availability of a financial assistance solicitation for cooperative agreement proposals.

SUMMARY: The Department of Energy (DOE) Office of Advanced Automotive Technologies (OATT) announces its interest in receiving applications from colleges and universities with accredited graduate engineering programs in the United States to develop Centers of Automotive Technology Excellence under the Graduate Automotive Technology Education (GATE) Program. The Centers are intended to provide multi-disciplinary engineering training for graduate students in specific areas of advanced automotive technology. The goal of the GATE Program is to overcome technology barriers preventing the development and production of cost-effective high-efficiency vehicles for the U.S. market.

DATES AND ADDRESSES: The complete solicitation document will be available on the Internet on or about May 18, 1998 by accessing the DOE Chicago Internet Home Page at http://www.ch.doe.gov/business/ACQ.html under the heading ''Current Acquisition Activities'' Solicitation No. DE–SC02–98EE50519. Applications are due no later than 3:00 p.m. Central Daylight Time (CDT), on July 17, 1998. Any amendments to the solicitation will continue to be posted on the Internet. Please note that users are not alerted when the solicitation is issued or when amendments are posted. Prospective offeror(s) are therefore advised to check the above Internet address on a daily basis. Awards are anticipated by August 30, 1998.

SUPPLEMENTARY INFORMATION: Completed applications referencing Solicitation No. DE–SC02–98EE50519 must be submitted to the U.S. Department of Energy, Chicago Operations Office, Attn: Dennis L. Wilson, Bldg. 201, Rm. 3F–08, 9800 South Cass Avenue, Argonne, IL 60439–4899. As a result of this solicitation, DOE may award five (5) cooperative agreements, one for each desired technology area. The period of performance is expected to be September 1, 1998 to August 30, 2000. Available funding, irrespective of the number of offerors selected, is $500,000.00 in FY 1998, and follow-on funding of approximately $500,000.00 for FY 1999. Colleges and universities that respond to this solicitation must already have significant experience with one or more of the desired technologies and have access to laboratory facilities and equipment to support their proposed programs.

FOR FURTHER INFORMATION CONTACT: Dennis L. Wilson, Acquisition and Assistance Group, Chicago Operations Office, 9800 South Cass Avenue, Argonne, Illinois 60439; Telephone No. (630) 252–2413; Fax No. (630) 252–5045, or by e-mail at dennis.wilson@ch.doe.gov

Issued in Chicago, Illinois on April 30, 1998.

James Bieschke,

Director of Operations Division, Acquisition and Assistance Group.

[FR Doc. 98–12680 Filed 5–12–98; 8:45 am]

BILLING CODE 6450–01–P

DEPARTMENT OF ENERGY

Environmental Management Site-Specific Advisory Board, Department of Energy, Los Alamos National Laboratory

AGENCY: Department of Energy.

ACTION: Notice of open meeting.

SUMMARY: Pursuant to the provisions of the Federal Advisory Committee Act (Pub. L. 92–463, 86 Stat. 770) notice is hereby given of the following Advisory Committee meeting: Environmental Management Site-Specific Advisory Board (EM SSAB), Los Alamos National Laboratory.

DATES: Thursday, May 28, 1998: 6 p.m.–9 p.m., 6:30 p.m. to 7 p.m. (public comment session).

ADDRESSES: Taos Convention Center, Taos, New Mexico.

FOR FURTHER INFORMATION CONTACT: Ms. Ann DuBois, Northern New Mexico Citizens' Advisory Board, Los Alamos National Laboratory, 528 35th Street, Los Alamos, New Mexico 87544, (505) 665–5048.

SUPPLEMENTARY INFORMATION: *Purpose of the Board:* The purpose of the Advisory Board is to make recommendations to DOE and its regulators in the areas of environmental restoration, waste management, and related activities.

Tentative Agenda:

6:00 p.m. Call to Order by DOE
6:00 p.m. Welcome by Chair, Roll Call, Approval of Agenda and Minutes from March 21, 1998 and April 28, 1998 Meetings
6:30 p.m. Public Comments
7:00 p.m. Break
7:15 p.m. Board Business—Formation of Committees, Charter, Budget Status, Workshop Announcements
8:30 p.m. Review of Outstanding Environmental Restoration/Waste Management Recommendations
9:00 p.m. Adjourn

Public Participation: The meeting is open to the public. Written statements may be filed with the Committee either before or after the meeting. Individuals who wish to make oral statements pertaining to agenda items should contact Ms. Ann DuBois, at (505) 665–5048. A sign-up sheet will also be available at the door of the meeting room for members of the public to indicate their desire to address the Board. Requests must be received 5 days prior to the meeting and reasonable provision will be made to include the presentation in the agenda. The Designated Federal Official is empowered to conduct the meeting in a fashion that will facilitate the orderly conduct of business.

Minutes: The minutes of this meeting will be available for public review and copying at the Freedom of Information Public Reading Room, 1E–190, Forrestal Building, 1000 Independence Avenue, SW, Washington, DC 20585 between 9 a.m. and 4 p.m., Monday–Friday, except Federal holidays. Minutes will also be available by writing to Mr. Mat Johansen, Deputy Designated Federal Officer, Department of Energy, Los Alamos Area Office, 528 35th Street, Los Alamos, NM 87185–5400.

Issued at Washington, DC on May 7, 1998.

Rachel Samuel,

Deputy Advisory Committee Management Officer.

[FR Doc. 98–12679 Filed 5–12–98; 8:45 am]

BILLING CODE 6450–01–P

DEPARTMENT OF ENERGY

Office of Energy Efficiency and Renewable Energy

Notice of Solicitation for Research and Development for Fuel Cells, Direct Injection Engines, and Fuels: Energy Efficiency and Renewable Energy Technology for Transportation and Buildings

AGENCY: Chicago Operations Office, DOE.

ACTION: Notice of solicitation availability.

SUMMARY: The U. S. Department of Energy (DOE) Office of Energy Efficiency and Renewable Energy announces its interest in receiving financial assistance applications for research and development (R&D) on automotive fuel cells, direct injection engines, and fuels in support of the Government/automotive industry Partnership for a New Generation of Vehicles (PNGV). The Partnership is

developing light-duty vehicles that achieve up to 3 times the fuel economy of comparable conventional vehicles, meet emissions standards, and offer the same level of performance and cost as today's vehicles. Direct injection engines and fuel cells have been selected for their potential for attaining the goal of 80-mpg fuel economy in a six-passenger sedan. In support of the DOE Office of Energy Efficiency and Renewable Energy fuel cell cross-cutting technologies, the Office of Building Technologies also plans to acquire research and development (R&D) of fuel cell technologies for building applications.

DATES AND ADDRESSES: The complete solicitation document will be available on or about July 1, 1998 on the DOE Chicago Internet Home Page at http://www.ch.doe.gov/business/ACQ.htm under the heading ''Current Acquisition Activities,'' Solicitation No. DE–SC02–98EE50526 with applications due August 17, 1998. Any amendments to this solicitation will be posted on the Internet. Please note that users will not be alerted when the solicitation is issued on the Internet or when amendments are posted on the Internet. Prospective applicants are therefore advised to check the above Internet address on a daily basis. The cooperative agreements are expected to be awarded on or about March 1, 1999.

FOR FURTHER INFORMATION CONTACT: John O'Keefe, at (630) 252–2125, U.S. Department of Energy, 9800 South Cass Avenue, Argonne, IL 60439–4899; by fax at (630) 252–5045; or by e-mail at john.o'keefe@ch.doe.gov.

SUPPLEMENTARY INFORMATION: Topic 1 includes research on proton-exchange-membrane (PEM) fuel cells for transportation and buildings. Proposals for light-duty transportation applications are sought in three areas and building applications in another area: (1) Fuel cell system integration issues, including delivery of complete sub-scale fuel cell power systems; one to DOE for experiments to validate fuel cell system models, another for use at the contractor(s) laboratory facilities to develop engineering solutions for operation at extreme conditions while ensuring water balance and demonstrating freeze-thaw capability. DOE also seeks to update existing cost analyses incorporating the principles of design for manufacturability. (2) Fuel cell component R&D, including development of CO tolerant anodes, higher activity cathodes, manufacturing technologies, air compressor/expanders, controls and sensors, coolants, stack sealants, gaskets, and adhesives for stack durability. (3) Fuel processing R&D, including CO clean-up and design for manufacturability of preferential oxidation system(s), start-up and transient response, durability, and innovative ideas for reducing size, weight, and cost of the fuel processing system. (4) The Fuel Cell for Buildings Program seeks advanced components for PEM fuel cell cogeneration systems which are simple in construction with no heavily loaded mechanical subsystems that limit life and reliability; operate at a pressure of 1.5 atm or below; have heat rejection temperatures in excess of 100°C to provide access to a broad range of applications for cogeneration systems and reduce the cost of heat rejection when operating in a power only mode; and are highly reliable during long-term operation on natural gas reformate from low-cost fuel processors. PEM fuel cell technologies based on Nafion™ or similar materials as an electrolyte are unlikely to meet these system requirements. In an activity which cross-cuts with the needs of the transportation fuel cell program, the Fuel Cell for Buildings Program seeks to acquire research and development of advanced high temperature membrane(s) with performance equal to or better than that of Nafion™.

Topic 2 includes research in three areas: (1) Compression-ignition direct injection engines (CIDI), (2) spark-ignition direct injection engines (SIDI), and (3) innovative concepts. The primary technical barrier facing automotive DI engines is the development of combustion and emission control technology able to reliably meet stringent emission regulations. (1) The focus of the CIDI engine research is on NO_X and particulate matter (PM) emissions control technology for light-duty vehicle applications. Emission control component development includes research on advanced after-treatment technologies that will enable PNGV-candidate CIDI engines (operating on low-sulfur diesel fuel) and SIDI engines (operating on reformulated gasoline) to meet NO_X and PM emissions targets (0.2 g/mi NO_X and 0.01 g/mi PM) as well as other requirements (e.g., cost and efficiency). Examples of components being sought are advanced fuel injection systems (high-pressure, rate shaping) and exhaust gas recirculation in combination with after-treatment approaches such as lean NO_X catalysts, non-thermal plasma, and regenerative particulate traps. (2) The focus of the SIDI efforts will be the development of durable fuel injectors and associated equipment for light-duty vehicles. After treatment devices and associated sensors for SIDI engines are needed as well. (3) In addition, proposals are sought for innovative, high-risk research into novel means of reducing emissions or improving the efficiency of SIDI, CIDI or conventional gasoline-fueled, spark-ignition engines. New, forward thinking devices and systems that make significant improvements in engine performance and are practical to implement are sought.

Topic 3 includes research on fuels and lubricants. Proposals are sought in four areas: (1) Optimized CIDI fuels, including research on advanced fuel formulations, fuel characterization test development, and lubricity additive performance mechanisms. Advanced CIDI fuel formulations including but not limited to oxygenate additives and cetane enhancers which facilitate meeting future passenger car emission standards are being sought. Recommendations for fuel characterization test methods may include, among others, means for determining compatibility with CIDI after-treatment systems, storage stability, thermal stability, fuel system and engine deposit forming potential, compatibility with engine and fuel system materials, blending compatibility with petroleum fuels, combustion particulate forming potential, cold start, and low-temperature operation. Determination of CIDI fuel lubricity additive performance will include evaluation of additive mechanisms such as surface adsorption at the temperature and pressure of operation. (2) CIDI engine lubrication research, including advanced lubricant formulations to help meet vehicle fuel economy and exhaust emission targets, demonstrated through lubricant bench test characterization methods. (3) Research to identify, characterize, and test fuels specifically optimized for automotive fuel cells. The work may include an analysis and/or formulation of fuels that offer advantages for on-board reforming processes (e.g., less coking, ease of operation at extreme ambient conditions, greater hydrogen yield, and emissions reductions) and a determination of the cost of producing these fuels and the impact of these fuels on the fueling infrastructure and oil imports. Offerors should assess candidate fuels using current automotive-type partial oxidation reformers as the fuel processing baseline. (4) Research on innovative natural gas compressors to reduce the size, noise, and cost of the compressor island, significantly lower energy

consumption for compression, and reduce maintenance requirements. Innovative concepts for gas storage, gas dispensing, operating strategies for the storage capacity, and providing the small amount of highest-pressure gas needed to complete vehicle fueling are desired. Research is also sought in the area of truly conformable tank technology (i.e., storage devices that are integral to the vehicle), either with or without storage density enhancement techniques. The objective is to develop storage vessels in non-cylindrical shapes that are conducive to incorporation into automobiles and light trucks.

A major DOE program objective is to increase the involvement of the automotive industry supplier base in key engine-related R&D programs.

The Department of Energy anticipates that approximately twenty-five cooperative agreements will result from this solicitation. Under Topic 1 there will be approximately twelve awards, with periods of performance ranging from eighteen to thirty months and total estimated DOE funding of $10,000,000.00 to $30,000,000.00. Under Topic 2 there will be approximately five awards, with periods of performance of thirty months and total estimated DOE funding of $40,000,000.00. Under Topic 3 there will be approximately eight awards with periods of performance of thirty-six months and total estimated DOE funding of $10,000,000.00. Cost sharing requirements will vary from zero to fifty percent, depending on the topic area, and will be specified in the solicitation. Awards are subject to the availability of funds and the solicitation will not obligate DOE to make any award(s). Any non-profit or for-profit organization, university or other institution of higher education, or non-federal agency or entity is eligible to apply. Federal laboratory participation shall be minimal and will be subject to DOE approval. The solicitation will provide further guidance in this area. Awards resulting from this solicitation will be subject to the requirements of the Energy Policy Act of 1992 which in general requires that the awardee be a United States-owned company (including certain non-profits) or that the foreign country in which the parent company is located meets certain conditions of reciprocity in the treatment of investments, access to research and development programs, and protection of intellectual property. All responsible sources, as indicated above, may submit an application which shall be considered by the government.

Issued in Chicago, Illinois on May 4, 1998.

J. D. Greenwood,

Acquisition and Assistance Group Manager.

[FR Doc. 98–12677 Filed 5–12–98; 8:45 am]

BILLING CODE 6450–01–P

DEPARTMENT OF ENERGY

Federal Energy Regulatory Commission

[Docket No. CP98–114–001]

K N Interstate Gas Transmission Company; Notice of Amendment to Application

May 7, 1998.

Take notice that on May 1, 1998, K N Interstate Gas Transmission Company (Applicant), P.O. Box 281304, Lakewood, Colorado 80228, filed a request in Docket No. CP98–114–001 to amend its application filed December 4, 1997, in Docket No. CP98–114–000. Applicant had filed in Docket No. CP98–114–000 pursuant to Sections 157.205 and 157.212 of the Commission's Regulations under the Natural Gas Act for authorization to construct and operate thirteen new delivery taps, under blanket certificate issued in Docket No. CP83–140–000, *et al.*[1] Applicant's application to amend its request for authorization is on file with the Commission and open for public inspection.

Applicant proposed in Docket No. CP98–114–000 to construct thirteen new delivery taps located in Adams, Antelope, Buffalo, Custer, Pierce, and Sherman Counties, Nebraska and Kearny County, Kansas.[2] Pursuant to Rule 215 of the Commission's Rules of Practice and Procedure, Applicant proposes to amend its application pending in Docket No. CP98–114–000 to delete from its request ten delivery tap facilities. Applicant has been advised that certain of the retail customers who initially requested service at the proposed taps described in Docket No. CP98–114–000 as Tap Nos. 1 through 6, 9 through 11, and 13 no longer desire natural gas service at the locations specified in that application.

Any person desiring to be heard or to make any protest with reference to said application should on or before May 14, 1998, file with the Federal Energy Regulatory Commission, Washington, D.C. 20426, a petition to intervene or a protest in accordance with the requirements of the Commission's Rules of Practice and Procedure (18 CFR 385.214 or 385.211) and the Regulations under the Natural Gas Act (18 CFR 157.10). All protests filed with the Commission will be considered by it in determining the appropriate action to be taken but will not serve to make the protestants parties to the proceeding. Any person wishing to become a party to a proceeding or to participate as a party in any hearing therein must file a petition to intervene in accordance with the Commission's Rules.

Take further notice that, pursuant to the authority contained in and subject to the jurisdiction conferred upon the Federal Energy Regulatory Commission by Sections 7 and 15 of the Natural Gas Act and the Commission's Rules of Practice and Procedure, a hearing will be held without further notice before the Commission or its designee on this application if no petition to intervene is filed within the time required herein, if the Commission on its own review of the matter finds that a grant of the certificate is required by the public convenience and necessity. If a petition for leave is timely filed, or if the Commission on its own motion believes that a formal hearing is require, further notice of such hearing will be duly given.

Under the procedure provided for, unless otherwise advised, it will be unnecessary for Applicant to appear or be represented at the hearing.

Linwood A. Watson, Jr.,

Acting Secretary.

[FR Doc. 98–12663 Filed 5–12–98; 8:45 am]

BILLING CODE 6717–01–M

[1] *See*, 22 FERC ¶ 62,330 (1983).

[2] On January 26, 1998, the Kansas Corporation Commission filed a timely protest in Docket No. CP98–114–000. Since the protest was neither withdrawn nor resolved within the 30-day resolution period the prior notice request converted to a Section 7 proceeding.

DEPARTMENT OF ENERGY

Federal Energy Regulatory Commission

[Docket No. CP–403–000]

NorAm Gas Transmission Company; Notice of Application for Abandonment

May 7, 1998.

Take notice that on April 29, 1998, NorAm Gas Transmission Company (NGT), 1111 Louisiana Street, Houston Texas 77210–4455 filed in Docket No. CP98–403–000, an application pursuant to Section 7(b) of the Natural Gas Act and Part 157 of the Commission's Regulations for an order permitting and approving the abandonment of certain pipeline facilities in Panola County, Texas, all as more fully set forth in the request which is on file with the Commission and open to public inspection.

Specifically, NGT proposes to abandon Line ST–17, composed of approximately 374 feet of 8-inch pipe, in the W.C. Gray Survey A–245 in Panola County, Texas. NGT says this line was constructed in 1982 and certificated in Docket No. CP91–400, to receive gas supply from the discharge side of the Champlin Compressor Station and deliver it through an interconnection with Texas Gas Transmission Corporation. NGT indicates that as a result of changes in its business, this interconnection is no longer needed and has not been utilized for an extensive period.

NGT plans to abandon Line ST–17, in its entirety, along with an 8-inch dual meter run, 6-inch dual regulatory, and above ground appurtenant equipment. NGT relates that it will reclaim a 63 foot segment of ST–17 starting at the yard piping in the Champlin Compressor Station yard and abandon in place the remaining 311 feet of pipe. NGT says the 63 feet of pipe will be junked and the cost to reclaim this pipe is estimated to be $2,370.

Any person desiring to be heard or to make any protest with reference to said application should on or before May 28, 1998, file with the Federal Energy Regulatory Commission, 888 First Street, N.E., Washington, D.C. 20426, a motion to intervene or a protest in accordance with the requirements of the Commission's Rules of Practice and Procedure (18 CFR 385.211 and 385.214) and the regulations under the Natural Gas Act (18 CFR 157.10). All protests filed with the Commission will be considered by it in determining the appropriate action to be taken but will not serve to make the protestants parties to the proceeding. Any person wishing to become a party in any proceeding herein must file a motion to intervene in accordance with the Commission's rules.

Take further notice that, pursuant to the authority contained in and subject to the jurisdiction conferred upon the Commission by Sections 7 and 15 of the Natural Gas Act and the Commission's Rules of Practice and Procedure, a hearing will be held without further notice before the Commission or its designee on this application if no motion to intervene is filed within the time required herein, if the Commission on its own review of the matter finds that permission and approval for the proposed abandonment are required by the public convenience and necessity. If a motion for leave to intervene is timely filed, or if the Commission on its own motion believes that formal hearing is required, further notice of such hearing will be duly given.

Under the procedure herein provided for, unless otherwise advised, it will be unnecessary for NGT to appear or to be represented at the hearing.

Linwood A. Watson, Jr.,

Acting Secretary.

[FR Doc. 98–12635 Filed 5–12–98; 8:45 am]

BILLING CODE 6717–01–M

DEPARTMENT OF ENERGY

Federal Energy Regulatory Commission

[Project No. 9985–024]

Rivers Electric Company, Inc.; Notice of Availability of Draft Environmental Assessment

May 7, 1998.

An environmental assessment (EA) is available for public review. The EA is for an application to amend the license for the Mill Pond Hydroelectric Project. The application is to increase the operating level of the project impoundment 2 feet that would result in more efficient operation of the project. The EA finds that approval of the amendment would not constitute a major federal action significantly affecting the quality of the human environment. The project is located on Catskill Creek, near Leeds, New York.

Copies of the EA are available for review in the Public Reference Branch of the Commission's offices at 888 First Street, N.E., Washington, D.C. 20426.

Comments should be filed within 30 days from the date of this notice and should be addressed to David P. Boergers, Acting Secretary, Federal Energy Regulatory Commission, 888 First Street, N.E., Washington, D.C. 2426. Please affix Project No. 9985–024 to all comments. For further information, please contact John K. Novak, Environmental Assessment Coordinator, at (202) 219–2828.

Linwood A. Watson, Jr.,

Acting Secretary.

[FR Doc. 98–12636 Filed 5–12–98; 8:45 am]

BILLING CODE 6717–01–M

DEPARTMENT OF ENERGY

Federal Energy Regulatory Commission

Notice of Amendment of License To Enlarge Project Boundary

May 7, 1998.

Take notice that the following hydroelectric application has been filed with the Commission and is available for public inspection:

a. *Type of Application:* Amendment of License to Enlarge Project Boundary.

b. *Project No.:* 2743–034.

c. *Dated filed:* April 27, 1998.

d. *Applicant:* Alaska Energy Authority.

e. *Name of Project:* Terror Lake.

f. *Location:* The project is located approximately 25 miles southwest of the City of Kodiak, Alaska on the Terror and Kizhuyak rivers and their tributaries.

g. *Filed pursuant to:* Federal Power Act, 16 U.S.C., § 791(a)–825(r).

h. *Applicant Contact:* Mr. Stan Sieczkowski, Operations Manager, Alaska Energy Authority, 480 West Tudor Road, Anchorage, Alaska 99503, Phone: (907) 269–3000.

i. *FERC Contact:* Mohamad Fayyad, (202) 219–2665.

j. *Comment Date:* June 19, 1998

k. *Description of Amendment:* The licensee proposes to revise its erosion control system, which would consist of a dike structure armored with gabions and Reno mattresses, along the westerly side of the Kizhuyak River in the vicinity of the powerhouse. The construction of this dike requires modifying the project boundary to include an additional 20 acres. The purpose of the dike is to provide protection of project's facilities from erosion and flooding by the Kizhuyak River. The licensee proposes to complete the work in 1998.

1. This notice also consists of the following standard paragraphs; B, C1, and D2.

B. Comments, Protests, or Motions to Intervene—Anyone may submit comments, a protest, or a motion to intervene in accordance with the requirements of Rules of Practice and Procedure, 18 CFR 385.210, .211, .214. In determining the appropriate action to take, the Commission will consider all protests or other comments filed, but only those who file a motion to intervene in accordance with the Commission's Rules may become a party to the proceeding. Any comments, protests, or motions to intervene must be received on or before the specified comment date for the particular application.

C1. Filing and Service of Responsive Documents—Any filings must bear in all capital letters the title ''COMMENTS'', ''RECOMMENDATIONS FOR TERMS AND CONDITIONS'', ''PROTEST'', OR ''MOTION TO INTERVENE'', as applicable, and the Project Number of the particular application to which the filing refers. Any of the above-named documents must be filed by providing the original and the number of copies provided by the Commission's regulations to: The Secretary, Federal Energy Regulatory Commission,

888 First Street, N.E., Washington, D.C. 20426. A copy of any motion to intervene must also be served upon each representative of the Applicant specified in the particular application.

D2. Agency Comments—Federal, state, and local agencies are invited to file comments on the described application. A copy of the application may be obtained by agencies directly from the Applicant. If an agency does not file comments within the time specified for filing comments, it will be presumed to have no comments. One copy of an agency's comments must also be sent to the Applicant's representatives.

Linwood A. Watson, Jr.,

Acting Secretary.

[FR Doc. 98–12634 Filed 5–12–98; 8:45 am]

BILLING CODE 6717–01–M

ENVIRONMENTAL PROTECTION AGENCY

[OPP–50840; FRL–5789–2]

Receipt of a Notification to Conduct Small-Scale Field Testing of a Genetically Engineered Microbial Pesticide

AGENCY: Environmental Protection Agency (EPA).

ACTION: Notice.

SUMMARY: This notice announces receipt from DuPont Agricultural Products of a notification (352-NMP-A) of intent to conduct small-scale field testing involving baculoviruses, which have been genetically engineered to express synthetic genes which encode for an insect-specific toxin. The tests will be small-scale and will not involve more than a cumulative total of 10 acres per pest per year. Any food or feed crops shall be destroyed or consumed only by experimental animals. The Agency has determined that the notification may be of regional and national significance. Therefore, in accordance with 40 CFR 172.11(a), the Agency is soliciting public comments on this notification. Q02

DATES: Written comments must be received on or before June 12, 1998.

ADDRESSES: By mail, submit written comments to: Public Information and Records Integrity Branch, Information Resources and Services Division (7502C), Office of Pesticide Programs, Environmental Protection Agency, 401 M St., SW., Washington, DC 20460. In person, deliver comments to: Rm. 1119, CM #2, 1921 Jefferson Davis Highway, Arlington, VA.

Comments and data may also be submitted electronically to: opp-docket@epamail.epa.gov. Follow the instructions under Unit II. of this document. No Confidential Business Information (CBI) should be submitted through e-mail.

Information submitted as a comment concerning this document may be claimed confidential by marking any part or all of that information as CBI. Information so marked will not be disclosed except in accordance with procedures set forth in 40 CFR part 2. A copy of the comment that does not contain CBI must be submitted for inclusion in the public record. Information not marked confidential will be included in the public docket by EPA without prior notice. The public docket is available for public inspection in Rm. 1119 at the Virginia address given above, from 8:30 a.m. to 4 p.m., Monday through Friday, excluding legal holidays.

FOR FURTHER INFORMATION CONTACT: William R. Schneider, PM 90, Biopesticides and Pollution Prevention Division (7511W), Office of Pesticide Programs, Environmental Protection Agency, 401 M St., SW., Washington, DC 20460. Office location, telephone number, and e-mail address: 5th floor CS1 2800 Crystal Drive, Arlington, VA, (703) 308–8683, e-mail: schneider.william@epamail.epa.gov.

SUPPLEMENTARY INFORMATION: Notice of receipt of this notification does not imply a decision by the Agency on this notification.

EPA received a notification from DuPont Agricultural Products of Delaware (352-NMP-A). The proposed small-scale field trials involve the introduction of genetically engineered isolates of nuclear polyhedrosis baculoviruses, which have been genetically engineered to express a synthetic gene which encodes for an insect-specific toxin. The purpose of the proposed testing will be to assess and compare the efficacy of formulated and unformulated genetically engineered constructs, formulated and unformulated wild type nuclear polyhedrosis baculoviruses, and various controls against agriculture pest insects. These tests are similar to testing previously approved by EPA in 1996 (notification 352-NMP-4) and 1997 (notification 352-NMP-5). Following review of DuPont's notification and any comments received in response to this notice, EPA may approve the tests, ask for additional data, require additional modifications to the test protocols, or require an Experimental Use Permit application to be submitted. In accordance with 40 CFR 172.50, under no circumstances shall the proposed tests proceed until the submitter has received notice from EPA of its approval of such tests.

II. Public Record and Electronic Submissions

The official record for this document, as well as the public version, has been established for this document under docket control number ''OPP–50840'' (including comments and data submitted electronically as described below). A public version of this record, including printed, paper versions of electronic comments, which does not include any information claimed as CBI, is available for inspection from 8:30 a.m. to 4 p.m., Monday through Friday, excluding legal holidays. The official record is located at the Virginia address in ''ADDRESSES'' at the beginning of this document.

Electronic comments can be sent directly to EPA at:

opp-docket@epamail.epa.gov

Electronic comments must be submitted as an ASCII file avoiding the use of special characters and any form of encryption. Comment and data will also be accepted on disks in Wordperfect 5.1/6.1 or ASCII file format. All comments and data in electronic form must be identified by the docket control number ''OPP–508040.'' Electronic comments on this proposed rule may be filed online at many Federal Depository Libraries.

Dated: April 29, 1998.

Kathleen F. Knox,

Acting Director, Biopesticides and Pollution Prevention Division, Office of Pesticide Programs.

[FR Doc. 98–12721 Filed 5–12–98; 8:45 am]

BILLING CODE 6560–50–F

ENVIRONMENTAL PROTECTION AGENCY

[OPP–00535; FRL–5786–8]

Changes to Registration Priority System Involving Organophosphate (OP) Alternatives and Reduced Risk Candidates

AGENCY: Environmental Protection Agency (EPA).

ACTION: Notice of availability.

SUMMARY: EPA is soliciting comments on a draft, updated policy for the prioritization and expedited review of applications for significant OP alternative new active ingredients and new use registration applications for

conventional pesticides handled by the Registration Division (RD). This proposed policy would also change how reduce-risk candidates will be treated in the priority system. The proposal is available as a draft Pesticide Registration (PR) Notice entitled ''Changes to Registration Priority System Involving Organophosphate (OP) Alternatives and Reduced Risk Candidates,'' which is available upon request as indicated under Unit IV.

DATES: Written comments, identified by the docket number [OPP–00535], must be received on or before June 12, 1998.

ADDRESSES: Submit written comments identified by the docket control number OPP–00535 by mail to: Public Information and Records Integrity Branch, Information Resources and Services Division (7502C), Office of Pesticide Programs, Environmental Protection Agency, 401 M St. SW, Washington, DC 20460. In person, bring comments directly to the OPP Docket Office, which is located in Room 119 of Crystal Mall #2, 1921 Jefferson Davis Highway, Arlington, VA.

Comments may also be submitted electronically by sending electronic mail (e-mail) to: opp-docket@epamail.epa.gov. Follow the instructions under Unit IV of this document. No Confidential Business Information (CBI) should be submitted through e-mail.

Information submitted as a comment concerning this document may be claimed confidential by marking any part or all of that information as CBI. Information so marked will not be disclosed except in accordance with procedures set forth in 40 CFR part 2. A copy of the comment that does not contain CBI must be submitted for inclusion in the public record. Information not marked confidential will be included in the public docket by EPA without prior notice.

FOR FURTHER INFORMATION CONTACT: By mail: Peter Caulkins, Environmental Protection Agency (7505C), 401 M St., SW., Washington, DC 20460. Office location and telephone number: Crystal Mall #2, 1921 Jefferson Davis Highway, Arlington, VA, 22202, (703) 305–5447, fax: (703) 305–6920, e-mail: caulkins.peter@epamail.epa.gov.

SUPPLEMENTARY INFORMATION: This **Federal Register** notice announces the availability of the draft Pesticide Registration (PR) Notice and solicits comments on the proposed guidance.

Electronic Availability:

Internet

Electronic copies of this document and the draft PR Notice also are available from the EPA Home page at the **Federal Register** - Environmental Documents entry for this document under ''Laws and Regulations'' (http://www.epa.gov/fedrgstr/).

Fax-on-Demand

Using a faxphone call (202) 401–0527 and select item 6111 for a copy of this document and the PR Notice.

I. Purpose

The purpose of the proposed PR Notice is to update EPA's policy for the prioritization and expedited review of applications for significant OP alternative new active ingredients and new uses for conventional, primarily agricultural pesticides. This notice also changes how reduce-risk candidates will be treated in the priority system.

II. Background

The Office of Pesticide Programs' (OPP) Reduced-Risk Committee has screened five active ingredients (AIs) that are potentially significant alternatives for OPs. These five AIs have all passed the reduced-risk screen and have been placed into expedited review. Given how important it will be to have as many OP alternatives in the market as possible, OPP will use the reduced-risk screening mechanism to identify significant OP alternatives. If the Reduced-Risk Committee determines that a pending registration action is a potentially significant OP alternative, it could recommend that action for expedited review even if it does not qualify for reduced-risk status.

III. Policy Change

The proposed PR notice would amend the EPA's current priority scheme by making OP alternatives that pass the reduced-risk screen would be the second highest priority (#2) behind methyl bromide alternatives (#1). Also, any submission that is determined to be a significant OP alternative, which is not granted reduced-risk status, but is recommended by the Reduced-Risk Committee for expedited review, would become an Agency priority as well. Furthermore, any submission that passes the reduced-risk screen would become an Agency priority. An Agency priority does not count against a company's limit of five priorities.

IV. Public Record and Electronic Submissions

A record has been established for this action under docket number ''OPP–00535'' (including comments and data submitted electronically as described above). A public version of this record, including printed, paper versions of electronic comments, which does not include any information claimed as CBI, is available for inspection from 8:30 a.m. to 4 p.m., Monday through Friday, excluding legal holidays. The public record is located in Rm. 119 of the Public Information and Records Integrity Branch, Information Resources and Services Division, Office of Pesticide Programs, Environmental Protection Agency, Crystal Mall #2, 1921 Jefferson Davis Highway, Arlington, VA.

The official record for this action, as well as the public version, as described above will be kept in paper form. Accordingly, EPA will transfer all comments received electronically into printed, paper form as they are received and will place the paper copies in the official record which will also include all comments submitted in writing. The official record is the paper record maintained at the address in ADDRESSES at the beginning of this document.

V. Schedule for Finalizing the PR Notice

EPA plans to issue and make effective the final PR Notice as soon as possible. We anticipate that the guidance will be made final and effective within the next 3 months.

List of Subjects

Environmental protection, Agricultural pesticides.

Dated: April 22, 1998.

James Jones,

Director, Registration Division, Office of Pesticide Programs.

[FR Doc. 98–12580 Filed 5–12–98; 8:45 am]

BILLING CODE 6560–50–F

ENVIRONMENTAL PROTECTION AGENCY

[OPP–181063; FRL 5789–9]

Carbofuran; Receipt of Application for Emergency Exemption, Solicitation of Public Comment

AGENCY: Environmental Protection Agency (EPA).

ACTION: Notice.

SUMMARY: EPA has received a specific exemption request from the Mississippi Department of Agriculture, (hereafter referred to as the ''Applicant'') to use the pesticide flowable Carbofuran (Furadan 4F Insecticide/Nematicide) (EPA Reg. No. 279–2876) to treat up to 1 million acres of cotton in Mississippi, to control cotton aphids. The Applicant proposes the use of a chemical which has been the subject of a Special Review within EPA's Office of Pesticide Programs. The granular formulation of carbofuran was the subject of a Special

Review between the years of 1986–1991, which resulted in a negotiated settlement whereby most of the registered uses of granular carbofuran were phased out. While the flowable formulation of carbofuran is not the subject of a Special Review, EPA believes that the proposed use of flowable carbofuran on cotton could pose a risk similar to the risk assessed by EPA under the Special Review of granular carbofuran. Additionally, in 1997 EPA denied requests made under provisions of section 18 for this use of flowable carbofuran. Therefore, in accordance with 40 CFR 166.24, EPA is soliciting public comment before making the decision whether or not to grant the exemption.

DATES: Comments must be received on or before May 28, 1998.

ADDRESSES: Three copies of written comments, bearing the identification notation ''OPP–181063,'' should be submitted by mail to: Public Information and Records Integrity Branch, Information Resources and Services Division (7502C), Office of Pesticide Programs, Environmental Protection Agency, 401 M St., SW., Washington, DC 20460. In person, bring comments to: Rm. 119, Crystal Mall #2, 1921 Jefferson Davis Highway, Arlington, VA.

Comments and data may also be submitted electronically by sending electronic mail (e-mail) to: opp-docket@epamail.epa.gov. Follow the instruction under ''SUPPLEMENTARY INFORMATION.'' No Confidential Business Information (CBI) should be submitted through e-mail.

Information submitted in any comment concerning this notice may be claimed confidential by marking any part or all of that information as CBI. Information so marked will not be disclosed except in accordance with procedures set forth in 40 CFR part 2. A copy of the comment that does not contain CBI must be submitted for inclusion in the public record. Information not marked confidential may be included in the public record by EPA without prior notice.

The public docket is available for public inspection in Rm. 119, CM#2, 1921 Jefferson Davis Highway, Arlington, VA, from 8:30 a.m. to 4 p.m., Monday through Friday, excluding legal holidays.

FOR FURTHER INFORMATION CONTACT: By mail: David Deegan, Registration Division (7505C), Office of Pesticide Programs, Environmental Protection Agency, 401 M St., SW., Washington, DC 20460. Office location, telephone number and e-mail: CM#2, 1921 Jefferson Davis Highway, Arlington, VA, (703) 308–9358; e-mail: deegan.dave@epamail.epa.gov.

SUPPLEMENTARY INFORMATION: Pursuant to section 18 of the Federal Insecticide, Fungicide, and Rodenticide Act (FIFRA) (7 U.S.C. 136p), the Administrator may, at her discretion, exempt a state agency from any registration provision of FIFRA if she determines that emergency conditions exist which require such exemption. The Applicants have requested the Administrator to issue a specific exemption for the use of carbofuran on cotton to control aphids. Information in accordance with 40 CFR part 166 was submitted as part of this request.

As part of this request, the Applicant asserts that the state of Mississippi is likely to experience non-routine infestations of aphids during the 1998 cotton growing season. The applicant further claims that, without a specific exemption of FIFRA for the use of flowable carbofuran on cotton to control cotton aphids, cotton growers in the state will suffer significant economic losses. The applicant details a use program designed to minimize risks to pesticide handlers and applicators, non-target organisms (both Federally-listed endangered species, and non-listed species), and to reduce the possibility of drift and runoff.

The Applicant proposes to make no more than two applications of flowable carbofuran on cotton at the rate of 0.25 lb. active ingredient (a.i.) [(8 fluid oz.)] in a minimum of 2 gallons of finished spray per acre by air, or 10 gallons of finished spray per acre by ground application. The total maximum proposed use during the 1998 growing season June 1, 1998 until September 30, 1998 would be 0.5 lb. a.i. (16 fluid oz.) per acre. The applicant proposes that the maximum acreage which could be treated under the requested exemption would be 1 million acres. If all acres were treated at the maximum proposed rates, then 500,000 lbs. a.i. (125,000 gallons Furadan 4F Insecticide/Nematicide) would be used in Mississippi.

This notice does not constitute a decision by EPA on the application itself. The regulations governing section 18 require publication of a notice of receipt of an application for a specific exemption proposing use of a chemical (i.e., an active ingredient) which has been the subject of a Special Review within EPA's Office of Pesticide Programs, and the proposed use could pose a risk similar to the risk assessed by EPA under the previous Special Review. Such notice provides for opportunity for public comment on the application.

The official record for this notice, as well as the public version, has been established for this notice under docket number [OPP–181063](including comments and data submitted electronically as described below). A public version of this record, including printed, paper versions of electronic comments, which does not include any information claimed as CBI is available for inspection from 8:30 a.m. to 4 p.m., Monday through Friday, excluding legal holidays. The official record is the paper record maintained at the address in ''ADDRESSES'' at the beginning of this document.

Electronic comments can be sent directly to EPA at:

opp-docket@epamail.epa.gov

Electronic comments must be submitted as an ASCII file avoiding the use of special characters and any form of encryption. Comments and data will also be accepted on disks in WordPerfect in 5.1/6.1 or ASCII file format. All comments and data in electronic form must be identified by the docket number [OPP–181063]. Electronic comments on this notice may be filed online at many Federal Depository Libraries.

The Agency, accordingly, will review and consider all comments received during the comment period in determining whether to issue the emergency exemption requested by the Mississippi Department of Agriculture.

List of Subjects

Environmental protection, Pesticides and pests, Emergency exemptions.

Dated: May 5, 1998.

James Jones,

Director, Registration Division, Office of Pesticide Programs.

[FR Doc. 98–12722 Filed 5–12–98; 8:45 am]

BILLING CODE 6560–50–F

FEDERAL COMMUNICATIONS COMMISSION

Notice of Public Information Collection(s) Submitted to OMB for Review and Approval

May 7, 1998.

SUMMARY: The Federal Communications Commission, as part of its continuing effort to reduce paperwork burden invites the general public and other Federal agencies to take this opportunity to comment on the following information collection(s), as required by the Paperwork Reduction Act of 1995, Public Law 104–13. An agency may not conduct or sponsor a

collection of information unless it displays a currently valid control number. No person shall be subject to any penalty for failing to comply with a collection of information subject to the Paperwork Reduction Act (PRA) that does not display a valid control number. Comments are requested concerning (a) whether the proposed collection of information is necessary for the proper performance of the functions of the Commission, including whether the information shall have practical utility; (b) the accuracy of the Commission's burden estimate; (c) ways to enhance the quality, utility, and clarity of the information collected; and (d) ways to minimize the burden of the collection of information on the respondents, including the use of automated collection techniques or other forms of information technology.

DATES: Written comments should be submitted on or before June 12, 1998. If you anticipate that you will be submitting comments, but find it difficult to do so within the period of time allowed by this notice, you should advise the contact listed below as soon as possible.

ADDRESSES: Direct all comments to Les Smith, Federal Communications Commission, Room 234, 1919 M St., NW., Washington, DC 20554 or via internet to lesmith@fcc.gov.

FOR FURTHER INFORMATION CONTACT: For additional information or copies of the information collection(s), contact Les Smith at 202–418–0217 or via internet at lesmith@fcc.gov.

SUPPLEMENTARY INFORMATION:

OMB Control No.: 3060–0211.

Title: Section 73. 1493 Political File.

Form No.: N/A.

Type of Review: Extension of a currently approved collection.

Respondents: Business or other for-profit.

Number of Respondents: 15,817.

Estimated Time Per Response: 0.25 hours per request (each station is estimated to have 25 political broadcasts per year).

Frequency of Response: On occasion.

Cost to Respondents: N/A.

Total Annual Burden: 98,856 hours.

Needs and Uses: Section 73.1943 requires licensees of broadcast stations to keep and permit public inspection of a complete record (political file) of all requests for broadcast time made by or on behalf of candidates for public office, together with an appropriate notation showing the disposition made by the licensee of such request. The data are used by the public to assess money expended and time allocated to a political candidate and to ensure that equal access was afforded to other qualified candidates.

OMB Control No.: 3060–0454.

Title: CC Docket No. 90–337, Regulation of International Accounting Rates.

Form No.: N/A.

Type of Review: Extension of a currently approved collection.

Respondents: Business or other for-profit.

Number of Respondents: 12.

Estimated Time Per Response: 1 hour.

Frequency of Response: On occasion.

Cost to Respondents: $5,850. Carriers are expected to contract for 5% of the burden hours to outside law firms to prepare submissions to the FCC, especially in their first submission. It is estimated that Respondents would pay the law firm approximately $150 per hour to file the data as the collection of the data will be handled in-house. This figure is based on a small survey of local firms in the D.C. area and is considered a conservative estimate.

Total Annual Burden: 780 hours.

Needs and Uses: The FCC requests this collection of information as a method to monitor the international accounting rates to insure that the public interest is being served and also to enforce Commission policies. By requiring a U.S. carrier to make an equivalency showing and to file other documents for end users interconnected international private lines, the FCC will be able to preclude one-way bypass and safeguard its international settlements policy. The data collected is required by Section 43.51 (d) of the FCC's rules.

OMB Control No.: 3060–0502.

Title: Section 73. 1942 Candidate Rates.

Form No.: N/A.

Type of Review: Extension of a currently approved collection.

Respondents: Business or other for-profit.

Number of Respondents: 11,518.

Estimated Time Per Response: 0.5 hours per disclosure (each station is estimated to make 25 disclosures of the lowest unit charge to candidates annually).

Frequency of Response: On occasion.

Cost to Respondents: N/A.

Total Annual Burden: 650,767 hours.

Needs and Uses: Section 315(b) of the Communications Act directs broadcast stations to charge political candidates the ''lowest unit charge of the station'' for the same class and amount of time for the same period, during the 45 day preceding a primary or runoff election and the 60 days preceding a general or special election.

Section 73.1942 requires broadcast licensees to disclose any station practices offered to commercial advertisers that enhance the value of advertising spots and different classes of time (immediately preemptible, preemptible with notice, fixed, fire sale, and make good). Section 73.1942 also requires licensees to calculate the lowest unit charge. Furthermore, stations are required to review their advertising records throughout the election period to determine whether compliance with this section requires that candidates receive rebates or credits. The disclosure would assure candidates that they are receiving the same lowest unit charge as other advertisers.

OMB Control No.: 3060–0788.

Title: DTV Showings/Interference Agreements

Form No.: FCC 301/FCC 340

Type of Review: Extension of a currently approved collection.

Respondents: Business or other for-profit; Not-for-profit institutions.

Number of Respondents: 20.

Estimated Time Per Response: 55 hours (5 hours per applicant; 50 hours for advisory committee).

Frequency of Response: On occasion; Third Party Disclosure.

Cost to Respondents: Undetermined.

Total Annual Burden: 100 hours.

Needs and Uses: Section V-D of the FCC 301/340 Forms begins with a ''Certification Checklist.'' This checklist contains a series of questions by which applicants may certify compliance with key processing requirements. The first certification requires conformance with the DTV Table of Allotments. In the Sixth Report and Order in MM Docket No. 87–268, the Commission allowed flexibility for DTV facilities to be constructed at locations within five kilometers of the reference allotment sites without consideration of additional interference to analog or DTV service, provided the DTV service does not exceed the allotment reference height above average terrain or effective radiated power. In order for the Commission to process applications that can not certify affirmatively, the rules adopted in the Sixth Report and Order require applicants to submit a technical showing to establish that their proposed facilities will not result in additional interference to TV broadcast and DTV operations.

Additionally, in the Sixth Report and Order, the Commission permitted broadcasters to agree to proposed DTV facilities that do not conform to the initial allotment parameters, even though they might be affected by potential new interference. The Commission also recognized that industry frequency coordination

could help to facilitate the implementation of the DTV service, and it encouraged the broadcast industry to continue their voluntary coordination efforts through a process open to all affected parties. In this regard, the Commission will consider granting applications on the basis of interference agreements, including agreements obtained through the coordination process, if it finds that such grants will serve the public interest. These agreements must be signed by all parties to the agreement. In addition, the Commission needs the following information to enable such public interest determination: a list of parties predicted to receive additional interference from the proposed facility, a showing as to why a grant based on the agreements would serve the public interest, and technical studies depicting the additional interference. Applicants who use a voluntary coordination process should provide the name, address and telephone number of the person who coordinated studies and a description of how the coordination process was open to all interested parties.

The technical showings and interference agreements will be used by FCC staff to determine if the public interest would be served by the grant of the application and to ensure that the proposed facilities will not result in additional interference.

Federal Communications Commission.

Magalie Roman Salas,

Secretary.

[FR Doc. 98–12666 Filed 5–12–98; 8:45 am]

BILLING CODE 6712–01–F

FEDERAL COMMUNICATIONS COMMISSION

[FCC 98–61]

Order to Show Cause and Notice of Opportunity for Hearing

AGENCY: Federal Communications Commission.

ACTION: Notice.

SUMMARY: The Federal Communications Commission will hold a hearing to determine whether to issue a Cease and Desist Order, and whether a forfeiture will be imposed for the unlicensed operation of a radio station in violation of the Communications Act in docket case CI 98–45.

DATES: Prehearing on May 18, 1998, 9:00 am; Hearing on June 16, 1998; 10:00 am.

ADDRESSES: All pleadings and papers must be mailed to Office of the Secretary, 1919 M Street, N.W., Room 222, Washington, D.C. 20554, Hearings held at Offices of the Commission.

FOR FURTHER INFORMATION CONTACT: Norman Goldstein and James Shook, Mass Media Bureau, (202) 418–1430, e-mail ngoldste@fcc.gov and jshook@fcc.gov

SUPPLEMENTARY INFORMATION:

Released: April 6, 1998

The Commission has under consideration information concerning the transmission of radio signals without a license by Lewis B. Arnold (''Arnold''). For the reasons that follow, we order Arnold to show cause, pursuant to Section 312(c) of the Communications Act of 1934, as amended (the ''Act''), 47 U.S.C. 312(c), why we should not issue a cease and desist order which prohibits further unauthorized transmissions on his part. Also, pursuant to Section 1.80(g) of the Commission's Rules (the ''rules''), 47 CFR 1.80(g), this order constitutes a notice of opportunity for hearing to determine whether, in addition to or as an alternative to the issuance of a cease and desist order, a forfeiture should be imposed for violations of the Act and the rules.

2. Background. On June 26, 1997, Dennis Anderson, the Seattle, Washington, District Director of the Commission's Compliance and Information Bureau (''CIB''), received information from Eric Carpenter (''Carpenter''), General Manager of AM/FM broadcast stations KCVL/KCRK in Colville, Washington, concerning an unauthorized radio station operating on 95.3 MHz in Chewelah, Washington. Carpenter alleged that the unauthorized station caused economic harm and interference to the reception of his station on 92.1 MHz. On July 7, 1997, the CIB Seattle Field Office received additional information from Carpenter to the effect that the Chewelah station was owned by Arnold. On July 9, 1997, a warning letter was sent to Arnold regarding the unlicensed radio station on 95.3 MHz. In pertinent part, the warning letter stated:

> Under Section 301 of the Communications Act of 1934, as amended, and the Commission's Rules and Regulations, radio transmitting apparatus, (other than certain low powered devices operated in accordance with Part 15 of the Commission's Rules and Regulations), may be operated only upon issuance by this Commission of a station license covering such apparatus. Unlicensed operation may subject the operator to serious penalties provided for in the Communications Act. Because unlicensed operation creates a definite danger of interference to important radio communications services and may subject the operator to the penalties provided for in the Communications Act, the importance of complying strictly with the legal requirements mentioned above is emphasized.

The letter also requested that Arnold submit a written explanation concerning the circumstances leading to the unauthorized operation of transmitting equipment and what corrective action had been or would be taken to prevent any future recurrence. Commission records reveal no response from Arnold to this letter.

Thereafter, on August 20, 1997, Agents Donald Roberson (''Roberson'') and Michael Rothe (''Rothe'') proceeded to the Chewelah area and detected a radio signal on 95.3 using radio direction-finding techniques. Further monitoring led Roberson and Rothe to conclude that the signal originated from a vertical dipole antenna mounted on a pole attached to a building located at N 103 4th Street East, Chewelah. Field strength measurements indicated signal levels, when extrapolated to 3 meters, of 1,261,500 ''V/m and 60,700 ''V/m. Part 15 of the rules allows unlicensed operation of a low power radio transmitter in the FM broadcast band provided the signal level is below 250 ''V/m at a distance of 3 meters. 47 CFR 15.239. Thus, the field strength measurements taken exceeded those allowed by Part 15 of the rules.

Again, on August 22, 1997, Roberson and Rothe located through radio direction-finding techniques an unlicensed radio station operating on 95.3 MHz at N 103 4th Street East, Chewelah. At approximately 12:05 p.m., Roberson and Rothe, accompanied by Chewelah Police Officer Mark Burrows, entered the property at N 103 4th Street East and requested to inspect the station. Arnold invited the agents into his station and gave them permission to inspect the radio transmission equipment.

5. Roberson and Rothe observed various pieces of audio gear and an FM stereo transmitter, an amplifier rated at one Watt output, and a vertical dipole antenna.[1] Arnold then acknowledged the following: (1) There is no license for the facilities; (2) he was fully responsible for the unlicensed station; (3) he was operating unlicensed to see if there was community support for his operation; (4) he had put the radio equipment together from a kit; (5) he has a web page for the radio station on the Internet; and (6) he had received the FCC warning letter.[2] By warning letter hand-delivered by Roberson and Rothe,

[1] Arnold requested that his signal be checked without the amplifier on. A field strength measurement revealed that with the amplifier off he was still exceeding Part 15 limits.

[2] Arnold also admitted that he holds an Amateur Extra Class operator license, call sign KJ7VR. On February 28, 2005, such license is due to expire. Should Arnold be found in violation of the Commission's Rules and the Communications Act based on the evidence before the Commission, any questions raised about Arnold's qualifications to remain a Commission licensee will be addressed in a separate proceeding.

Arnold again was advised that operation of the radio station violated federal law, and he was ordered to cease operations. Arnold shut the station off at 1:02 pm, as the agents were leaving. Subsequently, by letter dated August 25, 1997, Carpenter alleged that Arnold had resumed broadcasting on 95.3 MHz. On September 9, 1997, Carpenter telephoned District Director Anderson in the CIB Seattle Field Office, reiterating his complaint that Arnold's unlicensed transmissions were continuing. On March 21, 1998, at 10:00 am, Roberson confirmed that Arnold's transmissions were in fact continuing and that the signal levels far exceeded Part 15 limits.

6. **Discussion.** Section 301 of the Act, 47 U.S.C. § 301, provides in pertinent part: It is the purpose of this Act, among other things, to maintain the control of the United States over all the channels of radio transmission. * * * No person shall use or operate any apparatus for the transmission of energy or communications or signals by radio (a) from one place in any State * * * to another place in the same State * * * except under and in accordance with this Act and with a license in that behalf granted under the provisions of this Act.

Anyone transmitting radio transmissions in the United States must have authority from the Commission to do so. *See* 47 U.S.C. § 301; *U.S. v. Medina,* 718 F. Supp. 928 (S.D. Fla. 1989); U.S. v. Weiner, 701 F.Supp. 15 (D.Mass. 1988), *aff'd,* 887 F.2d 259 (1st Cir. 1989); *Stephen Paul Dunifer, 11 FCC Rcd 718, 720–21, ¶¶ 7–9 (1995) (regarding Commission's licensing requirement); and Order to Show Cause and Notice of Apparent Liability,* 50 FR 20603, published May 17, 1985 (Alan H. Weiner). As the facts recited above reflect, it appears that Arnold has violated and may currently be violating Section 301 of the Act.

Ordering Clauses

7. Accordingly, *It Is Ordered* that, pursuant to Section 312(c) of the Act, Lewis B. Arnold Is Directed To Show Cause why he should not be ordered to Cease And Desist from violating Section 301 of the Act, at a hearing to be held at a time and location specified in a subsequent Order, upon the following issues:

1. To determine whether Lewis B. Arnold has transmitted radio energy without appropriate authorization in violation of Section 301 of the Act.

2. To determine whether, based on the evidence adduced pursuant to the preceding issue, Lewis B. Arnold should be ordered to cease and desist from violating Section 301 of the Act.

8. *It Is further ordered* that, pursuant to Section 312(d) of the Communications Act of 1934, as amended, both the burden of proceeding with the introduction of evidence and the burden of proof shall be upon the Compliance and Information Bureau with respect to issues 1 and 2.

9. *It Is further ordered* that this Order to Show Cause shall constitute a Bill of Particulars with respect to all foregoing issues.

10. *It Is further ordered* that, to avail himself of the opportunity to be heard, Lewis B. Arnold, pursuant to Sections 1.91(c) of the Commission's Rules, in person or by attorney, Shall File in triplicate with the Commission within twenty (20) days of the mailing of this Order, a written appearance stating that he will appear at the hearing and present evidence on the matters specified in this Order.

11. *It Is further ordered* that, without regard as to whether the hearing record warrants an order that Lewis B. Arnold cease and desist from violating the Act or the rules, it shall be determined, pursuant to Section 503(b) of the Communications Act of 1934, as amended, whether an Order For Forfeiture in an amount not to exceed $11,000[3] shall be issued against Lewis B. Arnold for the alleged violations of Section 301 of the Act.

12. *It is further ordered* that in connection with the possible forfeiture liability noted above, this document constitutes a notice of opportunity for hearing pursuant to Section 503(b) of the Communications Act of 1934, as amended, and Section 1.80 of the Commission's Rules.

13. *It is further ordered* that a copy of each document filed in this proceeding subsequent to the date of adoption of this Order Shall Be Served on the counsel of record appearing on behalf of the Chief, Compliance and Information Bureau. Parties may inquire as to the identity of such counsel by calling the Compliance and Information Bureau at (202) 418–1100, TTY (202) 418–2544. Such service Shall Be Addressed to the named counsel of record, Compliance and Information Bureau, Federal Communications Commission, 1919 M Street, N.W., Washington, D.C. 20554.

14. *It is further ordered* that the Office of Public Affairs, Reference Operations Division of the Commission send a copy of this Order by Certified Mail—Return Receipt Requested to: Lewis B. Arnold, N 103 4th Street East, 2741 Flowery Trail Road, Chewelah, Washington 99109.

Also forward to: Lewis B. Arnold, The Independent, P.O. Box 5, Chewelah, Washington 99109.

Federal Communications Commission.

Magalie Roman Salas,

Secretary.

[FR Doc. 98–12811 Filed 5–12–98; 8:45 am]

BILLING CODE 6712–01–P

[3] This figure reflects the maximum appropriate forfeiture amount in light of the specific facts at issue. See 47 U.S.C. § 503(b)(2)(C); 47 CFR 1.80(b)(3), (b)(4), (b)(5); *see also In re the Commission's Forfeiture Policy Statement and Amendment of Section 1.80 of the Rules to Incorporate the Forfeiture Guidelines,* 12 FCC Rcd 17087 (1997)(petitions for reconsideration pending).

FEDERAL COMMUNICATIONS COMMISSION

[FCC 98–62]

Order To Show Cause and Notice of Opportunity for Hearing

AGENCY: Federal Communications Commission.

ACTION: Notice.

SUMMARY: The Federal Communications Commission will hold a hearing to determine whether to issue a Cease and Desist Order, and whether a forfeiture will be imposed for the unlicensed operation of a radio station in violation of the Communications Act in docket case CI 98–46.

DATES: Prehearing on May 20, 1998, 9:00 am; Hearing on June 30, 1998, 10:00 am.

ADDRESSES: All pleadings and papers must be mailed to Office of the Secretary, 1919 M Street, N.W., Room 222, Washington, D.C. 20554; Hearings held at Offices of the Commission.

FOR FURTHER INFORMATION CONTACT: Norman Goldstein and James Shook, Mass Media Bureau, (202) 418–1430, e-mail ngoldste@fcc.gov and jshook@fcc.gov

SUPPLEMENTARY INFORMATION:

Released: April 6, 1998

1. The Commission has under consideration information concerning Keith Perry's transmission of radio signals without a license. For the reasons that follow, we order Keith Perry to show cause, pursuant to Section 312(c) of the Communications Act of 1934, as amended (the ''Act''), 47 U.S.C. § 312(c), why we should not issue a cease and desist order which prohibits further unauthorized transmissions on his part. Also, pursuant to Section 1.80(g) of the Commission's Rules (the ''rules''), 47 C.F.R. § 1.80(g), this order constitutes a notice of opportunity for hearing to determine whether, in addition to or as an alternative to the issuance of a cease and desist order, a forfeiture should be

imposed for violations of the Act and the rules.

2. *Background.* On March 24, 1997, the Compliance and Information Bureau's (CIB) Dallas Field Office received a complaint from the Texas Association of Broadcasters concerning an unauthorized radio station operating on 88.5 MHz, northwest of Austin, Texas. On June 6, 1997, Loyd P. Perry (''Agent Perry''), the Houston, Texas, resident agent of the CIB and CIB Dallas Field Office Director James D. Wells (''Agent Wells'') were on duty in the Austin, Texas, area in a mobile automatic direction finding (MADF) vehicle. Agents Perry and Wells detected a radio signal on the frequency 88.5 MHz in the area of north Austin. Further monitoring led Agents Perry and Wells to determine that the signal originated from a vertical beam antenna mounted on a tower on the rear of the residence located at 607 Osage Drive, Leander, Texas, over fifteen miles from the location Agents Perry and Wells first detected the signal. Because the radio station utilized an external antenna over fifty feet in height and the signal could be received over fifteen miles away, Agents Perry and Wells concluded that the radio transmitting equipment exceeded the lower power limits set forth in Part 15 of the rules, 47 CFR § 15.239(b).

3. At approximately 12:47 p.m., Agents Perry and Wells approached the residence identified above. Leander Police Officer Tim Meaner was on hand to assist if necessary. Keith Perry identified himself as owner of the residence. Mr. Keith Perry admitted the operation of radio transmitting equipment at the residence, but refused entry into the residence. After a lengthy conversation, Keith Perry directed Agents Loyd Perry and Wells to a window at the east side of the residence where the agents were allowed to view the transmitting equipment.

4. Agents Perry and Wells observed a satellite dish mounted on the exterior of the house and audio cables from an unknown source, feeding into a small transmitter. Keith Perry stated that the cables provided audio from a satellite source received by the satellite dish on the residence. The transmitter, in turn, fed into another small transmitter, with cables leading to the vertical beam antenna located on a tower approximately sixty feet high, mounted at the rear of the residence. Agent Perry conducted radio frequency power measurements at the output of the transmitter, using an in-line wattmeter. Forward power was measured at 30 watts, reflected power at 2½ watts. Agents Perry and Wells concluded that the use of that amount of power and the use of an external antenna exceeded the limits set forth in part 15 of the rules, 47 CFR 15.239(b).

5. Keith Perry stated that he began operating the station in February 1997. He voluntarily disconnected the power to the transmitter during the inspection. Upon their return to the MADF vehicle, Agents Perry and Wells confirmed that the signal earlier detected was no longer present on the unit's receiving equipment.

6. On June 25, 1997, Agent Perry sent a letter under his signature by certified mail to Keith Perry.[1] In pertinent part, the letter stated:

> Radio transmitting equipment (other than certain low powered devices operated in accordance with Part 15 of the Rules) may be operated only upon issuance by this Commission of a station license covering such equipment. Unlicensed operation is a violation of Section 301 of the Act, 47 U.S.C. § 301, and may subject the operator to substantial monetary fines, in rem forfeiture action, and criminal sanctions including imprisonment. See 47 U.S.C. §§ 401, 501, 503, 510. Because unlicensed operation creates a danger of interference to important radio communications services and may subject the operator to severe penalties, we emphasize the importance of complying strictly with these legal requirements. Operation of radio transmitting equipment without proper authority granted by the Commission should cease immediately. (emphasis in the original).

7. The letter informed Keith Perry that he need not reply but, if desired, he could submit relevant information to the Commission's Houston Field Office. On July 24, 1997, Keith Perry submitted a written response to the warning letter. Keith Perry argued that: the FCC has no power to regulate FM broadcast stations operating with transmitter power of less than 100 watts; Agents Perry and Wells trespassed on his property and illegally parked their vehicle in front of his home; the FCC has no authority to inspect unlicensed stations; Agent Perry had no authority to operate the transmitter while conducting his tests; the agents slandered Keith Perry to the Leander Police Department; and insufficient postage was placed on the warning letter.

8. On August 29, 1997, Agent Perry was on duty in Austin, Texas, in a MADF vehicle. Agent Perry detected a radio signal on the frequency 95.9 MHz in the area of north Austin. Further monitoring led Agent Perry to conclude that the signal originated from a vertical beam antenna mounted on a tower on the rear of the residence located at 607 Osage Drive, Leander, Texas. No contact was made with Keith Perry at that time. On March 20, 1997, using direction finding techniques, Agent Perry confirmed that Keith Perry was continuing to operate.

9. Discussion. Section 301 of the Act, 47 U.S.C. § 301, provides in pertinent part:

> It is the purpose of this Act, among other things, to maintain the control of the United States over all the channels of radio transmission. * * * No person shall use or operate any apparatus for the transmission of energy or communications or signals by radio (a) from one place in any State * * * to another place in the same State * * * except under and in accordance with this Act and with a license in that behalf granted under the provisions of this Act.

Anyone transmitting radio transmissions in the United States must have authority from the Commission to do so. *See U.S. v. Medina,* 718 F. Supp. 928 (S.D. Fla. 1989); *U.S. v. Weiner,* 701 F.Supp. 15 (D.Mass. 1988), *aff'd,* 887 F.2d 259 (1st Cir. 1989); *Stephen Paul Dunifer,* 11 FCC Rcd 718, 720–21, ¶¶ 7–9 (1995) (regarding Commission's licensing requirement); and *Order to Show Cause and Notice of Apparent Liability,* 50 FR 20603, published May 17, 1985 (Alan H. Weiner). As the facts recited above reflect, it appears that Keith Perry has violated and may currently be violating Section 301 of the Act.

Ordering Clauses

10. Accordingly, *It is ordered* that, pursuant to Section 312(c) of the Act, Keith Perry Is Directed To Show Cause why he should not be ordered to Cease And Desist from violating Section 301 of the Act, at a hearing to be held at a time and location specified in a subsequent Order, upon the following issues:

1. To determine whether Keith Perry has transmitted radio energy without appropriate authorization in violation of Section 301 of the Act.

2. To determine whether, based on the evidence adduced pursuant to the preceding issue, Keith Perry should be ordered to cease and desist from violating Section 301 of the Act.

11. *It Is further ordered* that, pursuant to Section 312(d) of the Act, both the burden of proceeding with the introduction of evidence and the burden of proof shall be upon the Compliance and Information Bureau with respect to issues 1 and 2.

12. *It is further ordered* that this Order to Show Cause shall constitute a Bill of Particulars with respect to all foregoing issues.

[1] The June 25, 1997, letter mistakenly asserted that Keith Perry had transmitted on 87.9 MHz. By letter dated September 26, 1997, Agent Perry corrected the frequency referenced to reflect transmission on 88.5 MHz.

13. *It is further ordered* that, to avail himself of the opportunity to be heard, Keith Perry, pursuant to Section 1.91(c) of the rules, in person or by attorney, Shall File in triplicate with the Commission within twenty (20) days of the mailing of this Order, a written appearance stating that he will appear at the hearing and present evidence on the matters specified in this Order.

14. *It is further ordered* that, without regard as to whether the hearing record warrants an order that Keith Perry cease and desist from violating the Act or the rules, it shall be determined, pursuant to Section 503(b) of the Act, whether an Order For Forfeiture in an amount not to exceed $11,000[2] shall be issued against Keith Perry for the alleged violations of Section 301 of the Act.

15. *It is further ordered* that in connection with the possible forfeiture liability noted above, this document constitutes a notice of opportunity for hearing pursuant to Section 503(b) of the Act and Section 1.80 of the rules.

16. *It is further ordered* that a copy of each document filed in this proceeding subsequent to the date of adoption of this Order Shall Be Served on the counsel of record appearing on behalf of the Chief, Compliance and Information Bureau. Parties may inquire as to the identity of such counsel by calling the Compliance and Information Bureau at (202) 418–1100, TTY (202) 418–2544. Such service Shall Be Addressed to the named counsel of record, Compliance and Information Bureau, Federal Communications Commission, 1919 M Street, N.W., Washington, D.C. 20554.

17. It Is Further Ordered that the Office of Public Affairs, Reference Operations Division of the Commission send a copy of this Order by Certified Mail—Return Receipt Requested to:

Keith Perry, 607 Osage Drive, Leander, Texas 78641.

Federal Communications Commission.

Magalie Roman Salas,

Secretary.

[FR Doc. 98–12813 Filed 5–12–98; 8:45 am]

BILLING CODE 6712–01–P

[2] This figure reflects the maximum appropriate forfeiture amount in light of the specific facts at issue. *See* 47 U.S.C. § 503(b)(2)(C); 47 CFR §§ 1.80(b)(3), (b)(4), (b)(5); *see also In re the Commission's Forfeiture Policy Statement and Amendment of Section 1.80 of the Rules to Incorporate the Forfeiture Guidelines,* 12 FCC Rcd 17087 (1997)(petitions for reconsideration pending).

FEDERAL COMMUNICATIONS COMMISSION

[FCC 98–60]

Order To Show Cause and Notice of Opportunity for Hearing

AGENCY: Federal Communications Commission.

ACTION: Notice.

SUMMARY: The Federal Communications Commission will hold a hearing to determine whether to issue a Cease and Desist Order, and whether a forfeiture will be imposed for the unlicensed operation of a radio station in violation of the Communications Act in docket case CI 98–44.

DATES: Prehearing on May 19, 1998, 9:00 am; Hearing on June 23, 1998, 10:00 am.

ADDRESSES: All pleadings and papers must be mailed to Office of the Secretary, 1919 M Street, N.W., Room 222, Washington, D.C. 20554; Hearings held at Office of the Commission.

FOR FURTHER INFORMATION CONTACT: Norman Goldstein and James Shook, Mass Media Bureau, (202) 418–1430, e-mail ngoldste@fcc.gov and jshook@fcc.gov

SUPPLEMENTARY INFORMATION:

Released: April 6, 1998.

1. The Commission has under consideration information concerning the transmission of radio signals without a license by Joseph Frank Ptak (''Ptak''). For the reasons that follow, we order Ptak to show cause, pursuant to Section 312(c) of the Communications Act of 1934, as amended (the ''Act''), 47 U.S.C. 312(c), why we should not issue a cease and desist order which prohibits further unauthorized transmissions on his part. Also, pursuant to Section 1.80(g) of the Commission's Rules (the ''rules''), 47 CFR 1.80(g), this order constitutes a notice of opportunity for hearing to determine whether, in addition to or as an alternative to the issuance of a cease and desist order, a forfeiture should be imposed for violations of the Act and rules.

2. *Background.* On April 9, 1997, Loyd P. Perry (''Perry''), one of the Houston, Texas, resident agents of the Commission's Compliance and Information Bureau (''CIB''), received information from the San Marcos (Texas) Police Department concerning an unauthorized radio station operating on 105.9 MHz. Perry and CIB Dallas Director James D. Wells (''Wells'') proceeded to the San Marcos area in mobile automatic direction finder (''MADF'') unit FC–660. About 10 miles south of San Marcos, Perry and Wells detected a radio signal on 105.9 MHz, which increased in strength as they approached San Marcos. Further monitoring led Perry and Wells to conclude that the signal originated from a vertical dipole antenna mounted on a tower situated on the grounds of a residence located at 505 Patricia Drive, San Marcos. Further, considering the height above ground of the antenna and the distance from the antenna to the location where they first detected the signal, Perry and Wells concluded that the signal strength exceeded 250 μV/m at 3 meters, the limit for unlicensed operation as set forth in Section 15.239(b) of the rules, 47 CFR 15.239(b).

3. At approximately 3:18 p.m., Perry and Wells heard a signal identified as ''KIND'' on 105.9 MHz. At approximately 3:29 p.m., Perry and Wells, accompanied by San Marcos Police Officer Royce Smith, entered upon the property at 505 Patricia Drive and asked to speak with the owner. Ptak identified himself as such. Perry then requested permission to inspect the radio transmission equipment to which Ptak granted his request.

4. In a bedroom of the residence, Perry and Wells observed a transmitter with a cable exiting a window. The cable, in turn, was connected to a vertical dipole antenna mounted on a 25 to 30 foot tower adjacent to the rear of the residence. An unconnected wattmeter was located next to the transmitter. Ptak then acknowledged the following: (1) There is no license for the facilities; (2) the transmitter output was 30 watts; (3) operation had begun on March 26, 1997, and had continued 24 hours per day since March 26; and (4) the station was operated by the Hayes County Guardian newspaper and staffed with volunteers. Perry, thereupon, orally advised Ptak that operation of the radio station violated federal law, and he ordered Ptak to cease operations. Ptak refused. Thereafter, at 4:00 p.m. on April 9, Perry and Wells again identified the source of a signal on 105.9 MHz as the facilities observed at 505 Patricia Drive.

5. On April 17, 1997, Perry sent a letter under his signature by certified mail to Ptak. In pertinent part, the letter stated:

> Operation of radio transmitting equipment, other than certain low powered devices operated in accordance with Part 15 of the Rules, may be operated only upon issuance by this Commission of a station license. Unlicensed operation is a violation of Section 301 of the Act, 47 U.S.C. 301, and may subject the operator to substantial monetary fines, *in rem* forfeiture action, and criminal sanctions including imprisonment. See 47 U.S.C. 401, 501, 503, 510. Because

unlicensed operation creates a danger of interference to important radio communications services and may subject the operator to severe penalties, we emphasize the importance of complying strictly with the legal requirements mentioned above. Operation of radio transmitting equipment without proper authority granted by the Commission should *cease immediately*. (emphasis in the original).

The letter also informed Ptak that he need not reply but, if desired, he could submit relevant information to Perry. Commission records reveal no response from Ptak.

6. By a letter dated May 12, 1997 and transmitted via facsimile on May 13, 1997, a further complaint from the San Marcos Police Department concerning Ptak's unlicensed operation was received by Perry. Among other things, the complaint reflected that unauthorized transmissions by Ptak were continuing. Perry's investigations indicated that the unauthorized transmissions by Ptak were still ongoing. On March 20, 1998, using direction finding techniques, Perry confirmed that Ptak was continuing to operate.

7. *Discussion*. Section 301 of the Act, 47 U.S.C. 301, provides in pertinent part:

It is the purpose of this Act, among other things, to maintain the control of the United States over all the channels of radio transmission. * * * No person shall use or operate any apparatus for the transmission of energy or communications or signals by radio (a) from one place in any State * * * to another place in the same State * * * except under and in accordance with this Act and with a license in that behalf granted under the provisions of this Act.

Anyone transmitting radio transmissions in the United States must have authority from the Commission to do so. *See U.S.* v. *Medina,* 718 F. Supp. 928 (S.D. Fla. 1989); *U.S.* v. *Weiner,* 701 F.Supp. 15 (D.Mass. 1988), *aff'd,* 887 F.2d 259 (1st Cir. 1989); *Stephen Paul Dunifer,* 11 FCC Rcd 718, 720–21, ¶¶ 7–9 (1995) (regarding Commission's licensing requirement); and *Order to Show Cause and Notice of Apparent Liability,* 50 FR 20603, published May 17, 1985 (Alan H. Weiner). As the facts recited above reflect, it appears that Ptak has violated and may currently be violating Section 301 of the Act.

Ordering Clauses

8. Accordingly, It Is Ordered that, pursuant to Section 312(c) of the Act, Joseph Frank Ptak Is Directed To Show Cause why he should not be ordered to Cease And Desist from violating Section 301 of the Act, at a hearing to be held at a time and location specified in a subsequent Order, upon the following issues:

1. To determine whether Joseph Frank Ptak has transmitted radio energy without appropriate authorization in violation of Section 301 of the Act.

2. To determine whether, based on the evidence adduced pursuant to the preceding issue, Joseph Frank Ptak should be ordered to cease and desist from violating Section 301 of the Act.

9. *It is further ordered* that, pursuant to Section 312(d) of the Communications Act of 1934, as amended, both the burden of proceeding with the introduction of evidence and the burden of proof shall be upon the Compliance and Information Bureau with respect to issues 1 and 2.

10. *It is further ordered* that this Order to Show Cause shall constitute a Bill of Particulars with respect to all foregoing issues.

11. *It is further ordered* that, to avail himself of the opportunity to be heard, Joseph Frank Ptak, pursuant to Section 1.91(c) of the rules, in person or by attorney, Shall File in triplicate with the Commission within twenty (20) days of the mailing of this Order, a written appearance stating that he will appear at the hearing and present evidence on the matters specified in this Order.

12. *It is further ordered* that, without regard as to whether the hearing record warrants an order that Joseph Frank Ptak cease and desist from violating the Act or the rules, it shall be determined, pursuant to Section 503(b) of the Act, whether an Order For Forfeiture in an amount not to exceed $11,000 [1] shall be issued against Joseph Frank Ptak for the alleged violations of Section 301 of the Act.

13. *It is further ordered* that in connection with the possible forfeiture liability noted above, this document constitutes a notice of opportunity for hearing pursuant to Section 503(b) of the Act and Section 1.80 of the rules.

14. *It is further ordered* that a copy of each document filed in this proceeding subsequent to the date of adoption of this *Order shall be served* on the counsel of record appearing on behalf of the Chief, Compliance and Information Bureau. Parties may inquire as to the identity of such counsel by calling the Compliance and Information Bureau at (202) 418–1100, TTY (202) 418–2544. Such service *Shall be addressed* to the named counsel of record, Compliance and Information Bureau, Federal Communications Commission, 1919 M Street, N.W., Washington, D.C. 20554.

15. *It is further ordered* that the Office of Public Affairs, Reference Operations Division of the Commission send a copy of this Order by Certified Mail—Return Receipt Requested to: Joseph Frank Ptak, 505 Patricia Drive, San Marcos, Texas 78666.

Federal Communications Commission.

Magalie Roman Salas,

Secretary.

[FR Doc. 98–12815 Filed 5–12–98; 8:45 am]

BILLING CODE 6712–01–P

[1] This figure reflects the maximum appropriate forfeiture amount in light of the specific facts at issue. *See* 47 U.S.C. 503(b)(2)(C); 47 CFR 1.80(b)(3), (b)(4), (b)(5); *see also In re the Commission's Forfeiture Policy Statement and Amendment of Section 1.80 of the Rules to Incorporate the Forfeiture Guidelines,* 12 FCC Rcd 17087 (1997)(petitions for reconsideration pending).

FEDERAL COMMUNICATIONS COMMISSION

[FCC 98–63]

Order To Show Cause and Notice of Opportunity for Hearing

AGENCY: Federal Communications Commission.

ACTION: Notice.

SUMMARY: The Federal Communications Commission will hold a hearing to determine whether to issue a Cease and Desist Order, and whether a forfeiture will be imposed for the unlicensed operation of a radio station in violation of the Communications Act in docket case CI 98–47.

DATES: Prehearing on May 19, 1998, 9:00 am; Hearing on June 23, 1998, 10:00 am.

ADDRESSES: All pleadings and papers must be mailed to Office of the Secretary, 1919 M Street, N.W., Room 222, Washington, D.C. 20554; Hearings held at Offices of the Commission.

FOR FURTHER INFORMATION CONTACT: Norman Goldstein and James Shook, Mass Media Bureau, (202) 418–1430, e-mail ngoldste@fcc.gov and jshook@fcc.gov

SUPPLEMENTARY INFORMATION:

Released: April 6, 1998

1. The Commission has under consideration information concerning the transmission of radio signals without a license by Mark A. Rabenold (''Rabenold''). For the reasons that follow, we order Rabenold to show cause, pursuant to Section 312(c) of the Communications Act of 1934, as amended (the ''Act''), 47 U.S.C. 312(c), why we should not issue a cease and desist order which prohibits further unauthorized transmissions on his part. Also, pursuant to Section 1.80(g) of the Commission's Rules (the ''rules''), 47 CFR 1.80(g), this order constitutes a notice of opportunity for hearing to

determine whether, in addition to or as an alternative to the issuance of a cease and desist order, a forfeiture should be imposed for violations of the Act and the rules.

2. *Background.* On August 21, 1997, Michael P. Rothe (''Rothe'') and Donald C. Roberson (''Roberson''), employees of the Commission's Compliance and Information Bureau (''CIB'') stationed in the Seattle Field Office observed an unauthorized FM broadcast station operating on 105.1 MHz in the Oroville, Washington, area. Using directional finding techniques, they determined that the signals came from an antenna at the back of the building at 1214 Main Street, Oroville. Rothe and Roberson measured the strength of the signal from two locations. At a distance of 103 meters from the antenna, the signal strength was measured at 6.5 mV/m, while, from a slightly different angle and at a distance of 99.3 meters, the signal strength was measured at 5.8 mV/m. Rothe and Roberson calculated that these values are the equivalent of 223,900 ''V/m at 3 meters and 180,400 ''V/m at 3 meters, respectively, both of which exceed the limit for unlicensed operation in the FM band of 250 ''V/m at 3 meters prescribed by Section 15.239 of the rules, 47 C.F.R. § 15.239. Further investigation by Rothe and Roberson appeared to indicate that the operator was Rabenold.

3. That same day, Rothe and Roberson located Rabenold. Rabenold informed them that he would let them inspect the station if they filled out a questionnaire he had prepared. After Rothe and Roberson refused to complete the questionnaire, Rabenold stated he would not let them inspect the station. Rothe and Roberson then handed Rabenold a letter, which advised Rabenold that no license had been issued by the Commission to him for broadcast operations on 105.1 MHz. The letter also stated that:

> [O]peration of radio transmitting equipment without a valid radio station authorization and/or refusal to allow inspection of your radio station constitutes violation of the Federal laws cited above and could subject the owner, operator or anyone aiding and abetting this illegal operation to an administrative penalty of monetary forfeiture under Section 503(b) of the Act, 47 U.S.C. 503(b) * * * UNLICENSED OPERATION OF THIS RADIO STATION MUST BE DISCONTINUED IMMEDIATELY. (emphasis in original).

The letter also solicited Rabenold's comments on the matter and advised him that he could request an interview with the Commission to discuss the matter.

By certified letter dated September 25, 1997, Dennis J. Anderson (''Anderson''), District Director of the Seattle Field Office, informed Rabenold that Commission agents had determined that he was operating illegally on 105.1 MHz in that the field strength of the signal transmitted by Rabenold exceeded the maximum authorized for operation without a license by Section 15.239(b) of the rules. 47 CFR 15.239(b). Anderson's letter advised Rabenold immediately to cease operating the unlicensed FM radio broadcast station and that operation of a radio transmitter without proper authorization could subject Rabenold to a forfeiture as well as criminal penalties. Anderson's letter requested a reply describing the steps that had been taken to ensure that illegal broadcasts did not recur. Commission records indicate that Rabenold appears to have signed the return receipt but that he did not submit a response. On March 12, 1998, Roberson confirmed that Rabenold's unauthorized transmissions are continuing.

5. *Discussion.* Section 301 of the Act, 47 U.S.C. 301, provides in pertinent part:

> It is the purpose of this Act, among other things, to maintain the control of the United States over all the channels of radio transmission. * * * No person shall use or operate any apparatus for the transmission of energy or communications or signals by radio (a) from one place in any State * * * to another place in the same State * * * except under and in accordance with this Act and with a license in that behalf granted under the provisions of this Act.

Anyone transmitting radio transmissions in the United States must have authority from the Commission to do so. *See U.S.* v. *Medina,* 718 F. Supp. 928 (S.D. Fla. 1989); *U.S. v.* Weiner, 701 F.Supp. 15 (D.Mass. 1988), *aff'd,* 887 F.2d 259 (1st Cir. 1989); *Stephen Paul Dunifer,* 11 FCC Rcd 718, 720–21, ¶¶ 7–9 (1995) (regarding Commission's licensing requirement); and *Order to Show Cause and Notice of Apparent Liability,* 50 FR 20603, published May 17, 1985 (Alan H. Weiner). As the facts recited above reflect, it appears that Rabenold has violated and may currently be violating Section 301 of the Act.

Ordering Clauses

6. Accordingly, *it is ordered* that, pursuant to Section 312(c) of the Act, Mark A. Rabenold Is Directed To Show Cause why he should not be ordered to Cease And Desist from violating Section 301 of the Act, at a hearing to be held at a time and location specified in a subsequent Order, upon the following issues:

1. To determine whether Mark A. Rabenold has transmitted radio energy without appropriate authorization in violation of Section 301 of the Act.

2. To determine whether, based on the evidence adduced pursuant to the preceding issue, Mark A. Rabenold should be ordered to cease and desist from violating Section 301 of the Act.

7. *It is further ordered* that, pursuant to Section 312(d) of the Act, both the burden of proceeding with the introduction of evidence and the burden of proof shall be upon the Compliance and Information Bureau with respect to issues 1 and 2.

8. *It is further ordered* that this Order to Show Cause shall constitute a Bill of Particulars with respect to all foregoing issues.

9. *It is further ordered* that, to avail himself of the opportunity to be heard, Mark A. Rabenold, pursuant to Sections 1.91(c) of the rules, in person or by attorney, Shall File in triplicate with the Commission within twenty (20) days of the mailing of this Order, a written appearance stating that he will appear at the hearing and present evidence on the matters specified in this Order.

10. *It is further ordered* that, without regard as to whether the hearing record warrants an order that Mark A. Rabenold cease and desist from violating the Act or the rules, it shall be determined, pursuant to Section 503(b) of the Act, whether an Order For Forfeiture in an amount not to exceed $11,000 [1] shall be issued against Mark A. Rabenold for the alleged violations of Section 301 of the Act.

11. *It is further ordered* that in connection with the possible forfeiture liability noted above, this document constitutes a notice of opportunity for hearing pursuant to Section 503(b) of the Act and Section 1.80 of the rules.

12. *It is further ordered* that a copy of each document filed in this proceeding subsequent to the date of adoption of this Order Shall Be Served on the counsel of record appearing on behalf of the Chief, Compliance and Information Bureau. Parties may inquire as to the identity of such counsel by calling the Compliance and Information Bureau at (202) 418–1100, TTY (202) 418–2544. Such service Shall Be Addressed to the named counsel of record, Compliance and Information Bureau, Federal

[1] This figure reflects the maximum appropriate forfeiture amount in light of the specific facts at issue. See 47 U.S.C. 503(b)(2)(C); 47 CFR 1.80(b)(3), (b)(4), (b)(5); *see also In re the Commission's Forfeiture Policy Statement and Amendment of Section 1.80 of the Rules to Incorporate the Forfeiture Guidelines,* 12 FCC Rcd 17087 (1997)(petitions for reconsideration pending).

Communications Commission, 1919 M Street, N.W., Washington, D.C. 20554.

13. *It is further ordered* that the Office of Public Affairs, Reference Operations Division of the Commission send a copy of this Order by Certified Mail—Return Receipt Requested to: Mark A. Rabenold, 960 Swanson Mill Road, Tonasket, Washington 98855.

Federal Communications Commission.

Magalie Roman Salas,

Secretary.

[FR Doc. 98–12812 Filed 5–12–98; 8:45 am]

BILLING CODE 6712–01–P

FEDERAL COMMUNICATIONS COMMISSION

[FCC 98–64]

Order To Show Cause and Notice of Opportunity for Hearing

AGENCY: Federal Communications Commission.

ACTION: Notice.

SUMMARY: The Federal Communications Commission will hold a hearing to determine whether to issue a Cease and Desist Order, and whether a forfeiture will be imposed for the unlicensed operation of a radio station in violation of the Communications Act in docket case CI 98–48.

DATES: Prehearing on May 21, 1998, 9:00 am; Hearing on June 23, 1998, 10:00 am.

ADDRESSES: All pleadings and papers must be mailed to Office of the Secretary, 1919 M Street, N.W., Room 222, Washington, D.C. 20554, Hearings held at Offices of the Commission.

FOR FURTHER INFORMATION CONTACT: Norman Goldstein and James Shook, Mass Media Bureau, (202) 418–1430, e-mail ngoldste@fcc.gov and jshook@fcc.gov

SUPPLEMENTARY INFORMATION:

Released: April 6, 1998.

1. The Commission has under consideration information concerning the transmission of radio signals without a license by Jerry Szoka (''Szoka''). For the reasons that follow, we order Szoka to show cause, pursuant to Section 312(c) of the Communications Act of 1934, as amended (the ''Act''), 47 U.S.C. 312(c), why we should not issue a cease and desist order which prohibits further unauthorized transmissions on his part. Also, pursuant to Section 1.80(g) of the Commission's Rules (the ''rules''), 47 CFR 1.80(g), this order constitutes a notice of opportunity for hearing to determine whether, in addition to or as an alternative to the issuance of a cease and desist order, a forfeiture should be imposed for violations of the Act and the rules.

2. Background. On November 4, 1996, James A. Bridgewater (''Bridgewater''), the Detroit Field Office Director of the Commission's Compliance and Information Bureau, received information from Mark Krieger, Chairman of the Society of Broadcast Engineers, concerning an unauthorized radio station operating as ''The Grid,'' on 96.9 MHz. On February 20, 1997, Bridgewater sent a letter under his signature by certified mail to ''The Grid.'' In pertinent part, the letter stated:

> Unlicensed operation is a violation of Section 301 of the Act, 47 U.S.C. 301, and may subject the operator to substantial monetary fines, in rem forfeiture action, and criminal sanctions including imprisonment. See 47 U.S.C. 401, 501, 503, 510. Because unlicensed operation creates a danger of interference to important radio communications services and may subject the operator to severe penalties, we emphasize the importance of complying strictly with the legal requirements mentioned above. Operation of radio transmitting equipment without proper authority granted by the Commission should *cease immediately*. (Emphasis in the original).

The letter also informed ''The Grid'' that a response was required within 15 days of receipt of the letter. On March 31, 1997, the Commission received an unsigned reply dated March 26, 1997, from Szoka, in which he acknowledged receipt of Bridgewater's letter and stated that he would take necessary actions to meet FCC requirements. He also urged the Commission to ignore the unlicensed operation because the station is top quality, provides a much needed community service without commercials, and is not interfering with other stations.

3. On June 11, 1997, Bridgewater sent Szoka a second warning letter regarding the unlicensed operation on 96.9 MHz. That letter also required a reply within 15 days of receipt. Commission records reveal no response from Szoka.

4. Between June 18, 1997, and September 9, 1997, the Commission received four additional complaints regarding the unlicensed broadcast operation at 96.9 MHz. Each complaint indicated that unauthorized transmissions were continuing.

5. On September 11, 1997, FCC Agents Patrick G. Patterson (''Patterson'') and Paul S. Mako (''Mako'') drove to Cleveland, Ohio, in a Commission mobile direction finding vehicle. At approximately 5:10 p.m., Patterson and Mako positively identified the location of the transmitted signal as emanating from 1281 West 9th Street, Cleveland, Ohio. This address is the location of ''The Grid,'' a commercial night club. Patterson and Mako observed that the transmitting antenna was located at the top of the 4 1/2 story building on the north side and approximately half way between the front and back of the building. Patterson and Mako also determined that the coaxial cable connected to the antenna entered the building housing the establishment known as ''The Grid.'' The agents took a field strength measurement of the signal identified as ''The Grid.'' The measurement was made approximately 171 meters (561 feet) from the transmitting antenna and recorded a value of 35.55 millivolts/meter (33,550 microvolts/meter). This measurement far exceeds the limit set out in Section 15.239(b) of the rules, 47 CFR 15.239(b), which allows unlicensed operation of a low power radio transmitter in the FM broadcast band provided the signal level is below 250 μV/m at a distance of 3 meters. The 96.9 FM signal was also monitored via the direction finding vehicle's normal AM/FM radio by Patterson and Mako while exiting the Cleveland area and heading west on I–90. The signal could be heard for approximately 18.6 miles. On Friday, March 19, 1998, at 4:57 pm, FCC Agent Patterson confirmed that the station was still operating.

6. Discussion. Section 301 of the Act, 47 U.S.C. 301, provides in pertinent part: It is the purpose of this Act, among other things, to maintain the control of the United States over all the channels of radio transmission. * * * No person shall use or operate any apparatus for the transmission of energy or communications or signals by radio (a) from one place in any State * * * to another place in the same State * * * except under and in accordance with this Act and with a license in that behalf granted under the provisions of this Act.

Anyone transmitting radio transmissions in the United States must have authority from the Commission to do so. *See U.S.* v. *Medina,* 718 F. Supp. 928 (S.D. Fla. 1989); *U.S.* v. *Weiner,* 701 F.Supp. 15 (D.Mass. 1988), *aff'd,* 887 F.2d 259 (1st Cir. 1989); *Stephen Paul Dunifer,* 11 FCC Rcd 718, 720–21, ¶¶ 7–9 (1995) (regarding Commission's licensing requirement); and *Order to Show Cause and Notice of Apparent Liability,* 50 FR 20603, published May 17, 1985 (Alan H. Weiner). As the facts recited above reflect, it appears that Szoka has violated and may currently be violating Section 301 of the Act.

Ordering Clauses

7. Accordingly, It Is Ordered that, pursuant to Section 312(c) of the Act,

Jerry Szoka Is Directed To Show Cause why he should not be ordered to Cease And Desist from violating Section 301 of the Act, at a hearing to be held at a time and location specified in a subsequent Order, upon the following issues:

a. To determine whether Jerry Szoka has transmitted radio energy without appropriate authorization in violation of Section 301 of the Act.

b. To determine whether, based on the evidence adduced pursuant to the preceding issue, Jerry Szoka should be ordered to cease and desist from violating Section 301 of the Act.

8. *It Is Further Ordered* that, pursuant to Section 312(d) of the Act, both the burden of proceeding with the introduction of evidence and the burden of proof shall be upon the Compliance and Information Bureau with respect to issues a and b.

9. *It Is Further Ordered* that this Order to Show Cause shall constitute a Bill of Particulars with respect to all foregoing issues.

10. *It Is Further Ordered* that, to avail himself of the opportunity to be heard, Jerry Szoka, pursuant to Sections 1.91(c) of the rules, in person or by attorney, Shall File in triplicate with the Commission within twenty (20) days of the mailing of this Order, a written appearance stating that he will appear at the hearing and present evidence on the matters specified in this Order.

11. *It Is Further Ordered* that, without regard as to whether the hearing record warrants an order that Jerry Szoka cease and desist from violating the Act or the rules, it shall be determined, pursuant to Section 503(b) of the Act, whether an Order For Forfeiture in an amount not to exceed $11,000 [1] shall be issued against Jerry Szoka for the alleged violations of Section 301 of the Act.

12. *It Is Further Ordered* that in connection with the possible forfeiture liability noted above, this document constitutes a notice of opportunity for hearing pursuant to Section 503(b) of the Act and Section 1.80 of the rules.

13. *It Is Further Ordered* that a copy of each document filed in this proceeding subsequent to the date of adoption of this Order Shall Be Served on the counsel of record appearing on behalf of the Chief, Compliance and Information Bureau. Parties may inquire as to the identity of such counsel by calling the Compliance and Information Bureau at (202) 418–1100, TTY (202) 418–2544. Such service Shall Be Addressed to the named counsel of record, Compliance and Information Bureau, Federal Communications Commission, 1919 M Street, N.W., Washington, D.C. 20554.

14. *It Is Further Ordered* that the Office of Public Affairs, Reference Operations Division of the Commission send a copy of this Order by Certified Mail—Return Receipt Requested to: Jerry Szoka, The Grid, 1281 West 9th Street, Cleveland, Ohio 44113.

Federal Communications Commission.

William F. Caton,

Deputy Secretary.

[FR Doc. 98–12814 Filed 5–12–98; 8:45 am]

BILLING CODE 6712–01–P

[1] This figure reflects the maximum appropriate forfeiture amount in light of the specific facts at issue. *See* 47 U.S.C. 503(b)(2)(C); 47 CFR §§ 1.80(b)(3), (b)(4), (b)(5); *see also In re the Commission's Forfeiture Policy Statement and Amendment of Section 1.80 of the Rules to Incorporate the Forfeiture Guidelines,* 12 FCC Rcd 17087 (1997)(petitions for reconsideration pending).

FEDERAL COMMUNICATIONS COMMISSION

Public Information Collections Approved by Office of Management and Budget

May 6, 1998.

The Federal Communications Commission (FCC) has received Office of Management and Budget (OMB) approval for the following public information collections pursuant to the Paperwork Reduction Act of 1995, Public Law 104–13. An agency may not conduct or sponsor and a person is not required to respond to a collection of information unless it displays a currently valid control number. For further information contact Shoko B. Hair, Federal Communications Commission, (202) 418–1379.

Federal Communications Commission.

OMB Control No.: 3060–0330.

Expiration Date: 04/30/2001.

Title: Part 62 - Applications to Hold Interlocking Directorates.

Form No.: N/A.

Respondents: Business or other for-profit.

*Estimated Annual Burden:*10 respondents; 2 hour per response (avg.); 20 total annual burden hours for all collections.

Estimated Annual Reporting and Recordkeeping Cost Burden: $0.

Frequency of Response: On occasion.

Description: Persons seeking to hold interlocking positions with more than one carrier subject to the Communications Act of 1934, as amended, where any carrier sought to be interlocked has been found by the Commission to have market power and is defined as a dominant carrier or where any carrier has not yet been found to be non-dominant, except for cellular licensees in different geographic markets must file an application pursuant to 47 CFR Part 62. The collection of information is authorized by 47 U.S.C. Section 212. Congress mandated information collection under 47 U.S.C. Section 212 to be conducted by the Federal Communications Commission to monitor the effect of interlocking directorates on the telecommunications industry and to ensure they will not have any anticompetitive impact. Part 62 of the Commission's Rules and Regulations implements the statute. The information is used by Commission staff to deter anticompetitive practices. Obligation to respond: Mandatory.

OMB Control No.: 3060–0807.

Expiration Date: 04/30/2001.

Title: 47 CFR Section 51.803 and Supplementation Procedures for Petitions to Section 252(e)(5) of the Communications Act of 1934, as amended.

Form No.: N/A.

Respondents: Business or other for-profit.

Estimated Annual Burden: 52 respondents; 39.23 hour per response (avg.); 2040 total annual burden hours for all collections.

Estimated Annual Reporting and Recordkeeping Cost Burden: $0.

Frequency of Response: On occasion.

Description: Any interested party seeking preemption of a state commission's jurisdiction based on the state commission's failure to act shall notify the Commission as follows: (1) file with the Secretary of the Commission a detailed petition, supported by an affidavit, that states with specificity the basis for any claim that it has failed to act; and (2) serve the state commission and other parties to the proceeding on the same day that the party serves the petition on the Commission. Within 15 days of the filing of the petition, the state commission and parties to the proceeding may file a response to the petition. See 47 U.S.C. Section 252 and CFR Section 51.803. In a Public Notice (DA 97–2256), the Commission set out procedures for filing petitions for preemption pursuant to section 252(e)(5) of the Communications Act of 1934, as amended. Section 252(e)(5) provides that ''[i]f a State commission fails to act to carry out its responsibility under this section in any proceeding or other matter under this section, then the Commission shall issue an order preempting the State commission's jurisdiction of that proceeding or matter within 90 days after being notified (or taking notice) of such failure, and shall

assume the responsibility of the State commission under this section with respect to the proceeding or matter and act for the State commission.'' a. Filing of Petitions for Preemption. Each party seeking preemption should caption its preemption petition, ''Petition of [Petitioner's Name] pursuant to Section 252(e)(5) of the Communications Act (the Act).'' In addition, on the date of the petition's filing, the petitioner should serve a copy of the petition by hand delivery on the Common Carrier Bureau, and send a copy to the Commission's contractor for public service records duplication. Section 51.803(a)(2) of the Commission's rules requires each party seeking preemption pursuant to section 252(e)(5) to ''ensure that the state commission and the other parties to the proceeding or matter for which preemption is sought are served with the petition ... on the same date that the petitioning party serves the petition on the Commission.'' Therefore, each section 252(e)(5) petitioner should state in its certificate of service the steps it is taking to comply with this requirement (e.g., hand delivery or overnight mail). Petitions seeking preemption must be supported by affidavit and state with specificity the basis for the petition and any information that supports the claim that the state has failed to act. See 47 CFR 51.803. Each petitioner should append to its petition the full text of any State commission decision regarding the proceeding or other matter giving rise to the petition as well as the relevant portions of any transcripts, letters, or other documents on which the petitioner relies. Each petitioner should also provide a chronology of that proceeding or matter that lists, along with any other relevant dates, the date the petitioner requested interconnection, services, or network elements pursuant to section 251 of the Act, the dates of any requests for mediation or arbitration pursuant to section 252(a)(2) or (b)(1), and the dates of any arbitration decisions in connection with the proceeding or matter. (No. of respondents: 50; hours per response: 40 hours; annual burden: 2000 hours). b. Submission of Written Comments by Interested Third Parties. Interested third parties may file comments on a preemption petition in accordance with a public notice to be issued by the Commission. Commenters should provide identical material to that required of petitioners to the extent the relevant documents or information is not already included in the record in the proceeding. (No. of respondents: 2; hours per response: 20 hours; annual burden: 40 hours). All of the requirements are used to ensure that petitioners have complied with their obligations under the Communications Act of 1934, as amended. Obligation to respond: Required to obtain benefit.

OMB Control No.: 3060–0830.

Expiration Date: 10/31/98.

Title: Year 2000 Data Request (CCB).

Form No.: N/A.

Respondents: Business or other for-profit.

Estimated Annual Burden: 41 respondents; 30.04 hour per response (avg.); 1232 total annual burden hours for all collections.

Estimated Annual Reporting and Recordkeeping Cost Burden: $0.

Frequency of Response: One time.

Description: Many computer software programs used throughout the world were not designed to take into account the date change that will occur when we enter the year 2000. Computer and technology experts are uncertain as to the likely total effect of this so-called ''Millennium Bug.'' All sectors of the global economy rely on telecommunications networks. Failure to avert significant network failures could be calamitous. It is critical that the telecommunications industry take comprehensive and effective action to address the Year 2000 (Y2K) problem. Government and industry must work together to ensure that whatever disruptions occur do not lead to outages and failures throughout the nation's networks. Certain telecommunications carriers and major equipment manufacturers have been asked to provide information as requested in letters mailed to them regarding steps that have been taken to prevent Y2K computer system failures when the year 2000 arrives and to share information with other companies, and post their responses to the questions on their World Wide Website. Authority: 47 U.S.C. sections 151, 218, 403. The information collected will be used to better inform the FCC as to the magnitude of the threat posed by the year 2000 problem, and to determine if the FCC must act if it appears that the remedial measures taken by industry are not sufficient to avert significant network outages. The public must be assured that the telecommunications industry is taking sufficient steps to meet the challenges presented by the Millennium Bug. Obligation to respond: Mandatory.

OMB Control No.: 3060–0810.

Expiration Date: 05/31/2001.

Title: Procedures for Designation of Eligible Telecommunications Carriers Pursuant to Section 214(e)(6) of the Communications Act of 1934, as amended.

Form No.: N/A.

Respondents: Business or other for-profit.

Estimated Annual Burden: 35 respondents; 47.14 hour per response (avg.); 1650 total annual burden hours for all collections.

Estimated Annual Reporting and Recordkeeping Cost Burden: $0.

Frequency of Response: On occasion.

Description: The Communications Act of 1934, as amended (the Act), mandates that, after the date the Commission's rules implementing section 254 of the Act, only eligible telecommunications carriers may receive universal service support. The Commission's rules implementing section 254 of the Act take effect on January 1, 1998. Under the Act, state commissions must designate telecommunications carriers as eligible. On December 1, 1997 Public Law 105–125 added subsection (e)(6) to section 214(e) of the Act. New section 214(e)(6) states that a telecommunications carriers that is not subject to the jurisdiction of a state may request that the Commission determine whether it is eligible. Specifically, section 214(e)(6) states that ''[i]n the case of a common carrier ... that is not subject to the jurisdiction of a State commission, the Commission shall upon request designate such a common carrier that meets the requirements of paragraph (1) as an eligible telecommunications carrier for a service area designated by the Commission ... .'' The Commission must evaluate whether such telecommunications carriers, almost all of which are expected to be companies owned by Native American tribes, meet the eligibility criteria set forth in the Act. The Commission must obtain sufficient information to verify compliance with section 214(e)(6) so that final action may be taken to avoid hardship on these carriers who will otherwise lose the support that they are currently receiving. a. Petition for Designation as Eligible Telecommunications Carriers Pursuant to Section 214(e)(6). Carriers seeking designation from the Commission pursuant to section 214(e)(6) must demonstrate that they fulfill the requirements of section 214(e)(1). Carriers seeking designation from the Commission early in 1998 are instructed to provide a petition. b. Submission of Written Comments by Interested Third Parties. Oppositions or comments on petitions are due 10 days after a Public Notice announcing receipt of a petition is released. Reply comments are due 7 days after comments are due. The Commission will use the information

collected to determine whether the telecommunications carriers providing the data are eligible to receive universal service support. Obligation to comply: Required to obtain benefit.

OMB Control No.: 3060–0828.

Expiration Date: 10/31/98.

Title: State Forward-Looking Cost Studies for Federal Universal Service Support (Public Notice).

Form No.: N/A.

Respondents: Business or other for-profit.

Estimated Annual Burden: 47 respondents; 19 hour per response (avg.); 893 total annual burden hours for all collections.

Estimated Annual Reporting and Recordkeeping Cost Burden: $0.

Frequency of Response: On occasion.

Description: Pursuant to Congress's directive in section 254 of the Telecommunications Act of 1996 (1996 Act) that the Commission establish support mechanisms to ensure the delivery of affordable telecommunications service to all Americans, the Commission determined in the Order released May 8, 1997 that universal service support for rural, insular, and high cost areas (collectively referred to as high cost areas) should be based on forward-looking economic costs. The Commission stated that it will select a forward-looking economic cost mechanism for non-rural carriers by August 1998 that will replace current support mechanisms for non-rural carriers on January 1, 1999. In the Universal Service Order, the Commission concluded that states could submit forward-looking economic cost studies as the basis for calculating federal universal service high cost support for non-rural carriers in lieu of using the federal mechanism for determining federal universal service high cost support for non-rural carriers. The Commission adopted specific criteria to guide the states as they conduct those studies. The Commission stated that it will review each study submitted by a state, along with applicable comments. If the Commission finds that a state cost study meets the specified criteria, the Commission will approve the study for use in calculating federal support for non-rural eligible telecommunications carriers in rural, insular, and high cost areas in that state in accordance with the Universal Service Order. If a state cost study fails to meet the criteria adopted in the Universal Service Order, or if a state does not submit a study, the Commission will determine non-rural carriers' forward-looking economic cost of providing universal service in that state according to the Commission's forward-looking cost methodology. In a Public Notice, we set forth the information we need to evaluate whether a state's cost study complies with the criteria set forth in the Universal Service Order. To enable the Commission to make its determination in a timely fashion, we also set forth the manner in which this information should be presented. This collection, developed with the assistance of the Joint Board, is to be used by all states submitting cost studies, and should simplify and standardize the submission and review of state cost studies for the Commission, the states, and other interested parties. The Commission will use the information collected to evaluate whether state cost studies meet the criteria established in the Universal Service Order. Obligation to respond: Voluntary.

OMB Control No.: 3060–0253.

Expiration Date: 04/30/2001.

Title: Part 68 - Connection of Telephone Equipment to the Telephone Network (Sections 68.106, 68.108, 68.110).

Form No.: N/A.

Respondents: Business or other for-profit.

Estimated Annual Burden: 57,540 respondents; .056 hour per response (avg.); 3270 total annual burden hours for all collections.

Estimated Annual Reporting and Recordkeeping Cost Burden: $0.

Frequency of Response: On occasion.

Description: Title II of the Communications Act of 1934, as amended, 47 U.S.C. Section 201 et al provides the statutory authority for the Commission to promulgate the rules and regulations contained in Part 68 of FCC Rules, 47 CFR 68. Part 68 of FCC's rules and regulations establishes nationwide technical standards for telephone and data equipment designed for connection to the network. Part 68 also sets forth the terms and conditions for connection and for the registration of customer provided terminal equipment. The purpose of part 68 is to protect the network from certain types of harm and interference to other subscribers. Information submitted is used by the Common Carrier Bureau staff and FCC Laboratory for evaluation of equipment to determine whether such equipment meets the criteria set forth in part 68 of the Commission's Rules. This is necessary in order to prevent improperly designed equipment from causing harm to the nation's telephone network. Part 68 also contains third party disclosures requirements and notifications which are designed to ensure that the appropriate parties are notified when devices and equipment are connected to the network. Section 68.106 requires customers connecting terminal equipment or protective circuitry to the telephone network to provide, upon request, the particular line(s) to which such connection is made, the FCC registration number and ringer equivalence numbers necessary to the telephone company. The customer may be subject to other requirements depending on the components of the system being connected to the network. For example, customers who intend to connect premises wiring other than ''fully protected'' premises wiring to the telephone network are required to give notice to the telephone company in accordance with section 68.215(e). (No. of respondents: 50,000; hours per response: .05 hours; total annual burden: 2500 hours). Section 68.108 requires telephone companies to notify customers of possible discontinuance of service when customer's equipment is malfunctioning and to inform them of their right to file a complaint. (No. of respondents: 7500; hours per response .10 hours; total annual burden: 750 hours). Section 68.110 requires telephone companies to provide technical information concerning interface parameters not specified in Part 68 and to notify customers of changes in telephone company facilities, equipment, operations or procedures where such changes can be reasonably expected to render any customer's terminal equipment incompatible with the telephone company's communication facilities. (No. of respondents: 40; hours per response: .05 hours; total annual burden: 20 hours). The purpose of the program is to prevent harm to the telephone network when customer-provided telephone equipment is connected to telephone network company lines and assure that customers will not overload the telephone lines with excessive equipment which could degrade service to the customer and to others. Obligation to comply: Required.

OMB Control No.: 3060–0806.

*Expiration Date:*08/31/98.

Title: Universal Service, Schools and Libraries Universal Service.

Form No.: FCC Forms 470 and 471.

Respondents: Business or other for-profit.

Estimated Annual Burden: 60,000 respondents; 6 hour per response (avg.); 360,000 total annual burden hours for all collections.

Estimated Annual Reporting and Recordkeeping Cost Burden: $0.

Frequency of Response: On occasion.

Description: On May 8, 1997, the Commission adopted rules in CC Docket 96–45 providing discounts on all

telecommunications services, Internet access, and internal connections for all eligible schools and libraries. The following forms are used to implement these requirements and obligations: a. FCC Form 470 - Description of Services Requested and Certification. Schools and libraries ordering telecommunications services, Internet access, and internal connections under the universal service discount program must submit a description of the services desired to the Administrator. Schools and libraries may use the same description they use to meet the requirement that they generally face to solicit competitive bids. The Administrator will then post a description of the services sought on a website for all potential competing service providers to see and respond to as if they were requests for proposals (RFPs). 47 CFR 54.504(b)92), 47 CFR 54.504(b)(3). Pursuant to section 254(h) of the 1996 Act, schools and libraries must certify under oath that: (1) the school or library is an eligible entity under section 254(h)(4); (2) the services requested will be used solely for educational purposes; (3) the services will not be sold, resold, or transferred in consideration for money or any other thing of value; and (4) if the services are being purchased as part of an aggregated purchase with other entities, the identities of all co-purchasers and the portion of the services being purchased by the school or library. 47 CFR 54.504(b)(2). For schools ordering telecommunications services at the individual school level (i.e., primarily non-public schools), the person ordering such services should certify to the Administrator the percentage of students eligible in that school for the national school lunch program (or other comparable indicator of economic disadvantage ultimately selected by the Commission). This requirement arises in the context of determining which schools are eligible for the greater discounts being offered to economically disadvantage schools. For schools ordering telecommunications services at the school district level, the person ordering such services for the school district should certify to the Administrator the number of students in each of its schools eligible for the national school lunch program (or other comparable indicator of economic disadvantage). Schools and libraries must also certify that they have developed a technology plan that has been approved by an independent entity or the Administrator. The technology plan should demonstrate that they will be able to deploy any necessary hardware, software, and wiring, and to undertake any necessary teacher training required to use the services ordered pursuant to the section 254(h) discount effectively. 47 CFR 54.504(b)(2). (No. of respondents: 50,000; hours per response: 6 hours; total annual burden; 300,000). b. FCC Form 471 - Services Ordered and Certification. Schools and libraries that have ordered telecommunications services, Internet access, and internal connections under the universal service discount program must file FCC form 471 with the Administrator. This form requires schools and libraries to indicate whether funds are being requested for an existing contract, a master contract or whether it wishes to terminate service. Form 471 requires schools and libraries to list all services that have been ordered and the corresponding discount to which it is entitled. The school or library must also estimate its funding needs for the current funding year and for the following funding year. 47 CFR 54.504(b)(2). (No. of respondents: 60,000; hours per response: 6 hours; total annual burden: 360,000). All schools and libraries planning to order services eligible for universal service discounts must file FCC forms 470 and 471. The purpose of this information is to help determine which schools are eligible for the greater discounts. Schools and libraries must certify to the Administrator that they have developed an approved technology plan via Form 470. Copies of the forms may be obtained via e-mail from: <www.neca.org>. Obligation to respond: Required to obtain benefits.

OMB Control No.: 3060–0804.

Expiration Date: 08/31/98.

1Title: Universal Service - Health Care Providers Universal Service Program.

Form No.: FCC Forms 465, 466, 467, and 468.

Respondents: Business or other for-profit.

Estimated Annual Burden: 18,400 respondents; 6.6 hour per response (avg.); 121,500 total annual burden hours for all collections.

Estimated Annual Reporting and Recordkeeping Cost Burden: $0.

Frequency of Response: On occasion.

Description: FCC Form 465 - Description of Services Requested and Certification. All health care providers requesting services eligible for universal service support must file a Description of Services and Certification form with the Administrator. Filing this form is the first step a health care providers must take to participate in the universal service program. The Administrator will then post a description of the services sought on a website for all potential competing service providers to see and respond to as if they were requests for proposals (RFPs). (No. of respondents: 12,000; hours per response: 2.5; total annual burden: 30,000). FCC Form 466 - Services Ordered and Certification. All health care providers ordering services that are eligible for universal service support must file a Services Ordered and Certification Form with the Administrator. 47 CFR 54.603(b)(4). Form 466, Services Ordered and Certification will be used to ensure health care providers have selected the most cost-effective method of providing the requested services as set forth in 47 CFR 54.603(b)(4). FCC Form 466 is also the means by which an applicant informs the Administrator that it has entered a contract with a telecommunications service provider for services that are supported under the universal services support program. The administrator must receive this form before it can commit universal service funds to support the services for which the applicant has contracted. (No. of respondents: 15,000; hours per response: 1.5 hours; total annual burden: 22,500 hours). FCC Form 467, Receipt of Service Confirmation. All health care providers that are receiving supported telecommunications service must file this form with the Administrator. The data in the report will be used to ensure that health care providers are receiving the services they have contracted for with telecommunications service providers so that universal service support may be appropriate to the telecommunications service provider pursuant to 47 CFR 54.611. (No. of respondents: 12,000; hours per response: 1.5 hours; total annual burden: 18,000 hours). FCC Form 468, Telecommunications Service Providers Support. All health care providers ordering services eligible for universal service support must file this form. The data in the report will be used to ensure that health care providers have calculated the amount of universal service support as set forth in 47 CFR 54.609(b). Telecommunications carriers must complete Form 468 by indicating the rural and urban rates for the service they have provided and the amount of the discount for which they must be reimbursed, and return it to the health care provider. The health care provider must attach it to Form 466 and file both forms with the administrator. (No. of respondents: 3400; hours per response: 1.5 hours; total annual burden: 51,000 hours (assuming 10 submissions per respondent)). These forms are used to administer the health care providers universal service program. The

information is used primarily to determine eligibility. Copies of the forms may be obtained via e-mail from: <www.neca.org>. Obligation to respond: Required to obtain benefit. Public reporting burden for the collections of information is as noted above. Send comments regarding the burden estimate or any other aspect of the collections of information, including suggestions for reducing the burden to Performance Evaluation and Records Management, Washington, D.C. 20554.

Federal Communications Commission.

Magalie Roman Salas,

Secretary.

[FR Doc. 98–12665 Filed 5–12–98; 8:45 am]

BILLING CODE 6712–01–F

FEDERAL COMMUNICATIONS COMMISSION

[Report No. 2275]

Petitions for Reconsideration and Clarification of Action in Rulemaking Proceeding

May 7, 1998.

Petitions for reconsideration and clarification have been filed in the Commission's rulemaking proceedings listed in this Public Notice and published pursuant to 47 CFR 1.429(e). The full text of these documents are available for viewing and copying in Room 239, 1919 M Street, N.W., Washington, D.C. or may be purchased from the Commission's copy contractor, ITS, Inc., (202) 857–3800. Oppositions to these petitions must be filed May 28, 1998 See § 1.4(b)(1) of the Commission's rule (47 CFR 1.4(b)(1)). Replies to an opposition must be filed within 10 days after the time for filing oppositions has expired.

Subject: Advanced Television Systems and Their Impact Upon Existing Television Broadcast Service (MM Docket No. 87-268, FCC 98-23).

Number of Petitions Filed: 10.

Federal Communications Commission.

Magalie Roman Salas,

Secretary.

[FR Doc. 98–12669 Filed 5–12–98; 8:45 am]

BILLING CODE 6712–01–M

FEDERAL DEPOSIT INSURANCE CORPORATION

Affordable Housing Advisory Board Meeting

AGENCY: Federal Deposit Insurance Corporation (FDIC).

ACTION: Notice of meeting.

SUMMARY: In accordance with the Federal Advisory Committee Act, 5 U.S.C. App., established by the Resolution Trust Corporation Completion Act, Pub. L. 103–204, section 14(b), 107, Stat. 2369, 2393–2395 (1993), announcement is hereby published of the first meeting of the Affordable Housing Advisory Board (AHAB) for 1998. Due to administrative scheduling, this meeting notice will be published less than fifteen days prior to the meeting. The meeting is open to the public.

DATES: The Federal Deposit Insurance Corporation, Affordable Housing Advisory Board will hold its first meeting of 1998 on Wednesday, May 27, 1998 in Washington, D.C., from 2:00 pm to 4:00 pm.

ADDRESSES: The meeting will be held at the following location: Federal Deposit Insurance Corporation, Board Room 6010, 550 17th Street, Northwest, Washington, D.C. 20429.

FOR FURTHER INFORMATION CONTACT: Danita M.C. Walker, Committee Management Officer, Federal Deposit Insurance Corporation, 1776 F Street, NW, Room 3064, Washington, D.C. 20429, (202) 898–6711.

SUPPLEMENTARY INFORMATION: The Board consists of the Secretary of Housing and Urban Development (HUD) or delegated; the Chairperson of the Board of Directors of the FDIC, or delegates; the Chairperson of the Oversight Board, or delegate; four persons appointed by the General Deputy Assistant Secretary of HUD who represents the interests of individuals and organizations involved in using the affordable housing programs, and two former membersof the Resolution Trust Corporations Regional Advisory Boards. The AHAB's original charter was issued March 9, 1994 and re-chartered on February 26, 1996, and January 15, 1998.

Agendas: An agenda will be available at the meeting. At this session, the Board will (1) Report on the status of the FDIC Affordable Housing Program Sales and Monitoring, (2) Discuss the status of Board recommendations of the roles that regulators can play in facilitating affordable housing, (3) Discuss status of transitioning the Affordable Housing Program to the FDIC Dallas office and, (4) Discuss other policies and programs related to the provision of affordable housing. The AHAB will develop recommendations at the conclusion of the Board meeting.

The AHAB's chairperson or its Delegated Federal Officer may authorize a member or members of the public to address the AHAB during the public forum portion of the session.

Statements: Interested person may submit, in writing, data, information or views on the issues pending before the Affordable Housing Advisory Board prior to or at the meeting. Seating for the public is available on a first-come first-served basis.

Dated: May 8, 1998.

Danita M.C. Walker,

Committee Management Officer, Federal Deposit Insurance Corporation.

[FR Doc. 98–12675 Filed 5–12–98; 8:45 am]

BILLING CODE 6714–01–M

FEDERAL RESERVE SYSTEM

Change in Bank Control Notices; Acquisitions of Shares of Banks or Bank Holding Companies

The notificants listed below have applied under the Change in Bank Control Act (12 U.S.C. 1817(j)) and § 225.41 of the Board's Regulation Y (12 CFR 225.41) to acquire a bank or bank holding company. The factors that are considered in acting on the notices are set forth in paragraph 7 of the Act (12 U.S.C. 1817(j)(7)).

The notices are available for immediate inspection at the Federal Reserve Bank indicated. The notices also will be available for inspection at the offices of the Board of Governors. Interested persons may express their views in writing to the Reserve Bank indicated for that notice or to the offices of the Board of Governors. Comments must be received not later than May 27, 1998.

A. Federal Reserve Bank of Atlanta (Lois Berthaume, Vice President) 104 Marietta Street, N.W., Atlanta, Georgia 30303-2713:

1. CM/FS Reeves Investments, L.P., West Point, Georgia (Charles M. Reeves and Frances S. Reeves, general partners); to retain voting shares of Valley National Corporation, Lanett, Alabama, and thereby indirectly retain voting shares of Valley National Bank of Lanett, Lanett, Alabama.

Board of Governors of the Federal Reserve System, May 7, 1998.

Jennifer J. Johnson,

Deputy Secretary of the Board.

[FR Doc. 98–12620 Filed 5–12–98; 8:45 am]

BILLING CODE 6210–01–F

FEDERAL RESERVE SYSTEM

Formations of, Acquisitions by, and Mergers of Bank Holding Companies

The companies listed in this notice have applied to the Board for approval, pursuant to the Bank Holding Company

Act of 1956 (12 U.S.C. 1841 *et seq.*) (BHC Act), Regulation Y (12 CFR Part 225), and all other applicable statutes and regulations to become a bank holding company and/or to acquire the assets or the ownership of, control of, or the power to vote shares of a bank or bank holding company and all of the banks and nonbanking companies owned by the bank holding company, including the companies listed below.

The applications listed below, as well as other related filings required by the Board, are available for immediate inspection at the Federal Reserve Bank indicated. The application also will be available for inspection at the offices of the Board of Governors. Interested persons may express their views in writing on the standards enumerated in the BHC Act (12 U.S.C. 1842(c)). If the proposal also involves the acquisition of a nonbanking company, the review also includes whether the acquisition of the nonbanking company complies with the standards in section 4 of the BHC Act. Unless otherwise noted, nonbanking activities will be conducted throughout the United States.

Unless otherwise noted, comments regarding each of these applications must be received at the Reserve Bank indicated or the offices of the Board of Governors not later than June 8, 1998.

A. Federal Reserve Bank of St. Louis (Randall C. Sumner, Vice President) 411 Locust Street, St. Louis, Missouri 63102-2034:

1. Farmers Bancshares, Inc., Hardinsburg, Kentucky; to acquire up to 30 percent of the voting shares of Leitchfield Deposit Bancshares, Inc., Leitchfield, Kentucky, and thereby indirectly acquire Leitchfield Deposit Bank & Trust Company, Leitchfield, Kentucky.

B. Federal Reserve Bank of Kansas City (D. Michael Manies, Assistant Vice President) 925 Grand Avenue, Kansas City, Missouri 64198-0001:

1. Farmers Bancshares, Lincoln, Kansas; to merge with Beverly Bankshares, Inc., Beverly, Kansas, and thereby indirectly acquire Beverly State Bank, Beverly, Kansas.

Board of Governors of the Federal Reserve System, May 7, 1998.

Jennifer J. Johnson,

Deputy Secretary of the Board.

[FR Doc. 98–12621 Filed 5–12–98; 8:45 am]

BILLING CODE 6210–01–F

FEDERAL RESERVE SYSTEM

Formations of, Acquisitions by, and Mergers of Bank Holding Companies

The companies listed in this notice have applied to the Board for approval, pursuant to the Bank Holding Company Act of 1956 (12 U.S.C. 1841 *et seq.*) (BHC Act), Regulation Y (12 CFR Part 225), and all other applicable statutes and regulations to become a bank holding company and/or to acquire the assets or the ownership of, control of, or the power to vote shares of a bank or bank holding company and all of the banks and nonbanking companies owned by the bank holding company, including the companies listed below.

The applications listed below, as well as other related filings required by the Board, are available for immediate inspection at the Federal Reserve Bank indicated. The application also will be available for inspection at the offices of the Board of Governors. Interested persons may express their views in writing on the standards enumerated in the BHC Act (12 U.S.C. 1842(c)). If the proposal also involves the acquisition of a nonbanking company, the review also includes whether the acquisition of the nonbanking company complies with the standards in section 4 of the BHC Act. Unless otherwise noted, nonbanking activities will be conducted throughout the United States.

Unless otherwise noted, comments regarding each of these applications must be received at the Reserve Bank indicated or the offices of the Board of Governors not later than June 8, 1998.

A. Federal Reserve Bank of Richmond (A. Linwood Gill III, Assistant Vice President) 701 East Byrd Street, Richmond, Virginia 23261-4528:

1. Union Bankshares Corporation, Bowling Green, Virginia; to merge with Rappahannock Bankshares, Inc., Washington, Virginia, and thereby indirectly acquire The Rappahannock National Bank of Washington, Washington, Virginia.

B. Federal Reserve Bank of Atlanta (Lois Berthaume, Vice President) 104 Marietta Street, N.W., Atlanta, Georgia 30303-2713:

1. First TeleBanc Corporation, Sanford, Florida; to become a bank holding company by acquiring 100 percent of the voting shares of Boca Raton First National Bank, Boca Raton, Florida.

2. Regions Financial Corporation, Birmingham, Alabama; to merge with Villages Bankshares, Inc., Tampa, Florida, and thereby indirectly acquire The Village Bank of Florida, Tampa, Florida.

3. Regions Financial Corporation, Birmingham, Alabama; to merge with First Community Banking Services (formerly Fayette County Bancshares), Peachtree City, Georgia, and thereby indirectly acquire First Community Bank (formerly Fayette County Bank), Peachtree City, Georgia

4. Regions Financial Corporation, Birmingham, Alabama; to acquire 100 percent of the voting shares of Etowah Bank, Canton, Georgia.

Board of Governors of the Federal Reserve System, May 8, 1998.

Jennifer J. Johnson,

Deputy Secretary of the Board.

[FR Doc. 98–12657 Filed 5-12-98; 8:45 am]

BILLING CODE 6210-01-F

FEDERAL TRADE COMMISSION

Agency Information Collection Activities; Proposed Collection; Comment Request; Extension

AGENCY: Federal Trade Commission.

ACTION: Notice.

SUMMARY: The FTC is soliciting public comments on proposed extensions of Paperwork Reduction Act clearances for information collection requirements for a regulation that the Commission issues and enforces and for a study to assess the effectiveness of Commission divestiture orders in merger cases. These Office of Management and Budget (OMB) clearances expire on July 31, 1998. The FTC proposes that OMB extend its approval for the regulation an additional three years from clearance expiration and that approval for the divestiture order study be extended through December 31, 1999. The proposed information collection requirements described below will be submitted to OMB for review, as required by the Paperwork Reduction Act.

DATES: Comments must be submitted on or before July 13, 1998.

ADDRESSES: Send written comments to Gary M. Greenfield, Office of the General Counsel, Federal Trade Commission, Washington, D.C. 20580, (202) 326–2753. All comments should be identified as responding to this notice.

FOR FURTHER INFORMATION CONTACT: Requests for additional information or copies of the proposed information requirements should be addressed to Gary M. Greenfield, Attorney, Office of the General Counsel, 202–326–2753.

SUPPLEMENTARY INFORMATION: The purpose of this Notice is to solicit comments from members of the public

and affected agencies concerning the proposed collections of information to: (1) Evaluate whether the proposed collection of information is necessary for the proper performance of the functions of the agency, including whether the information will have practical utility; (2) Evaluate the accuracy of the agency's estimate of the burden of the proposed collection of information, including the validity of the methodology and assumptions used; (3) Enhance the quality, utility, and clarity of the information to be collected; and (4) Minimize the burden of the collection of information on those who are to respond, including through the use of appropriate automated, electronic, mechanical, or other technological collection techniques or other forms of information technology, e.g., permitting electronic submission of responses. The FTC will submit the proposed information collection requirements to OMB for review, as required by the Paperwork Reduction Act of 1995 (44 U.S.C. Chapter 35, as amended).

The relevant information collection requirements are as follows:

1. The Telemarketing Sales Rule, 16 CFR Part 310 (OMB Control Number 3084–0097)

Description of the collection of information and proposed use: The Telemarketing Sales Rule implements the Telemarketing and Consumer Fraud and Abuse Prevention Act, 15 U.S.C. 6101–6108 (''Telemarketing Act'' or ''the Act''). The Act seeks to prevent deceptive or abusive telemarketing practices. The Act mandates certain disclosures by telemarketers, and directs the Commission to consider recordkeeping requirements in its promulgation of a telemarketing rule to address such practices. As required by the Act, the Telemarketing Rule mandates certain disclosures regarding telephone sales and requires telemarketers to retain certain records regarding advertising, sales, and employees. The disclosures provide consumers with information necessary to make informed purchasing decisions. The records are available for inspection by the Commission and other law enforcement personnel to determine compliance with the Rule.

Estimate of information collection annual hourly burden: 9,053,000 hours. The estimated recordkeeping burden hours are 50,000. The estimated combined burden hours related to the required disclosures under the Rule are 9,003,000, for an estimated total of 9,053,000 burden hours.

Recordkeeping: At the time the Commission issued the Rule, it estimated that during the initial and subsequent years after the Rule took effect, only 100 entities a year would find it necessary to revise their practices to conform with the Rule and that it would take each such entity approximately 100 hours to assemble information or develop a compliant recordkeeping system, for a total of 10,000 burden hours a year. The Commission received no comments of any kind in connection with this estimate when it was issued and this estimate continues to be appropriate. There is no reason to believe that the number of new entrants into the telemarketing field who find it necessary to create a different recordkeeping system as a result of the Rule's recordkeeping requirements has increased. Of the estimated 39,900 industry members who have already assembled or maintained the required records and recordkeeping system, staff estimates that each member requires only one hour a year to comply with the Rule's recordkeeping requirements (39,900 hours). Therefore, the total yearly burden hours associated with the Rule's recordkeeping requirements is 49,900. The Commission requests this figure be rounded to 50,000 hours.

Disclosure: In connection with issuing the Rule and obtaining MOB clearance, staff previously estimated that the 39,900 (rounded to 40,000) industry members make approximately 9 billion calls per year, or 225,000 calls per year per company. The Telemarketing Sale Rule provides that if an industry member chooses to solicit inbound calls from consumers by advertising media other than direct mail or by using direct mail solicitations that make certain required disclosures, that member is exempted from complying with other disclosures required by the Rule. Because the burden of complying with written disclosures is less than the burden of complying with the Rule's oral disclosure requirements, staff estimated that at least 9,000 firms will choose to adopt marketing methods that exempt them from the oral disclosure requirements.

In connection with issuing the Rule, staff estimated that it takes 7 seconds for telemarketers to disclose the required outbound call information described above. Staff also estimated that at least 60% of calls result in ''hang-ups'' before the seller or telemarketer can make all the required disclosures. Staff estimated that ''hang-up'' calls last for only 2 seconds. Accordingly, staff estimates that the total disclosure burden associated with these initial disclosure requirements is approximately 250 hours per firm (90,000 non-hang up calls (40% of 225,000) × 7 seconds per call + 135,000 hang-up calls (60% of 225,000) × 2 seconds per call). Thus, the total burden for the 31,000 firms choosing marketing methods that require these oral disclosures is 7.75 million hours. When the Commission initially published this estimate, it received no comments and staff believes such estimates remain appropriate.

The Rule also requires additional disclosures before the customer pays for goods or services. Specifically, the sellers or telemarketers must disclose the total costs to purchase, receive, or use the offered goods or services; all material restrictions; and all material terms and conditions of the seller's refund, cancellation, exchange, or repurchase policies if a representation about the policy is a part of the sales offer. If a prize promotion is involved, the telemarketer must also disclose information about the non-purchase entry method for the prize promotion. Staff estimates that approximately 10 seconds is necessary to make these required disclosures. However, these disclosures need only be made where a call results in an actual sale or before the consumer pays. Staff estimates that sales occur in approximately 6 percent of telemarketing calls. Accordingly, the estimated burden for the disclosures is 37.5 hours per firm (13,500 calls—6% of 225,000—resulting in a sale × 10 seconds) or 1.163 million hours for the 31,000 firms choosing marketing methods that require oral disclosures. When the Commission initially published this estimate, it received no comments and staff believes such estimates remain appropriate.

Alternatively, the disclosures required before the customer pays for goods or services may be in writing. Usually, this would occur during a solicitation or mass mailing. Staff estimates that approximately 9,000 firms will choose to comply with this optional written disclosure requirement. Those firms are likely to be the same firms that would choose to advertise through written materials, and the burden of adding the disclosures required by the Rule is probably minimal. However, staff has no reliable data from which to conclude that there is no separately identifiable burden associated with this provision. Therefore, staff estimates that a typical firm will spend approximately 10 hours per year engaged in activities ensuring compliance with this provision of the Rule, for an estimated burden of 90,000 hours. When the Commission initially published this estimate, it received no

comments and staff believes such estimates remain appropriate.

Estimate of information collection and cost burden: $34,411,000.

(a) *Total capital and start up costs:* Staff estimates that the capital and start up costs associated with the Telemarketing Sales Rule's information collection requirements are *de minimis*. The Rule's recordkeeping requirements do not mandate that records be kept in any particular form. While the recordkeeping requirements necessitate that the affected entity have some storage device, virtually every entity is likely to already possess the means to store the required records. Most entities keep the type of records required by the Rule in the ordinary course of business. Even assuming that an entity found it necessary to purchase a storage device, which could be as inexpensive as a cardboard box, when the cost of the device is annualized over its useful life, the annual expenditure is likely to be very small.

The Rule's disclosure requirements require no capital expenditures.

(b) *Total operation/maintenance/purchase of services costs:* The Rule's recordkeeping requirements necessitate that companies maintain records. Accordingly, affected entities have to expend some capital on office supplies such as file folders, computer diskettes, or paper in order to comply with the Rule's recordkeeping requirements. Although staff believes that most affected entities would maintain the required records in the ordinary course of business, staff estimates that the approximately 40,000 industry members affected by the Rule spend an annual amount of $50 each on office supplies as a result of the Rule's recordkeeping requirements, for a total recordkeeping cost burden of $2,000,000.

In connection with the Rule's disclosure requirements, telemarketing firms may incur additional costs for telephone service, assuming that the firms spend more time on the telephone with customers as a result of the required disclosures. As indicated above, staff believes that the hour burdens relating to the required disclosures amount to 9,003,000 hours. Assuming all calls to customers are long distance and a commercial calling rate of 6 cents per minute ($3.60 an hour), affected entities as a whole may incur up to $32,410,800 in telecommunications costs as a result of the Rule's disclosure requirements.

As indicated previously, staff estimates that approximately 9,000 entities will choose to comply with the Rule through written disclosures. However, staff estimated that those companies incur no additional capital expenses as a result of the Rule's requirements because they are likely to provide written information to prospective customers in the ordinary course of business and adding the required disclosures to that written information does not require any supplemental expenditures. Thus, the total estimated cost burdens associated with the Rule's information collection is $34,411,000 (rounded to nearest thousand).

2. Study of the Effectiveness of Commission Divestiture Orders in Merger Cases (OMB Control Number 3084–0115)

Description of the collection of information and proposed use: The Commission is directed to prevent ''unfair methods of competition'' under Section 5 of the Federal Trade Commission Act (''FTC Act''), 15 U.S.C. 45, and is authorized to enforce the Clayton Act's proscriptions against anticompetitive mergers. 15 U.S.C. 18, 21. Under these general authorities, the Commission examines transactions to determine whether anticompetitive effects are likely and then fashions remedies that it believes are necessary to alleviate the likely anticompetivie effects.

In 1978, the Commission began a divestiture remedy similar to what appears in current orders. Generally, respondents are asked to divest a package of assets (deemed to be commercially viable based on the investigative staff's knowledge of the relevant market) within a specified time to a buyer to be approved by the Commission.

In 1995, the FTC's Bureau of Competition and Bureau of Economics undertook a pilot study to determine whether a more comprehensive study of Commission divestiture orders would be feasible and productive. The staff concluded that further study is necessary to draw more general conclusions about the effectiveness of the Commission's divestiture process as the circumstances surrounding the orders vary widely. OMB subsequently granted clearance for such an expanded study. Pursuant to that authority, FTC staff have interviewed numerous buyers of assets or businesses and respondents in the study. As with the pilot study, the information that staff have obtained continues to offer important insights into the effectiveness of the divestiture process.

Accordingly, the Commission's Bureau of Competition and Bureau of Economics staff will continue to conduct interviews with buyers and respondents in order to complete its review of the 36 sample orders comprising its study. Thereafter, staff will interview third-parties and solicit sales data from buyers and respondents. The objectives of the study continue to be to determine: (1) The effectiveness of Commission orders that seek to preserve or reestablish competition where the Commission has permitted a merger but required divestiture of certain assets; (2) The influence of certain provisions in Commission orders (e.g., length of time permitted for divestiture of ''crown jewel'' provisions) on the timeliness of divestitures and on the success of the business or assets divested; (3) The influence of divestiture procedures used by respondent to find a buyer on the timeliness of the divestitures and on the success of the business or assets divested; (4) The influence of the divestiture contract on the success of the divested business or assets; (5) The influence of the type of assets divested on the success of the divested business; (6) The influence of the type of buyer on the success of the divested business; and (7) Whether respondents have fully complied with the requirements under the order.

Securing information about the success of divested businesses (or businesses that have acquired divested assets) would provide a better understanding of the kind of order provisions most likely to lead to successful divestitures. The survey is designed to expand the Commission's knowledge by eliciting, across a broad spectrum of industries, information to evaluate the success of divestitures. Such information is likely to enhance the Commission's law enforcement mission.

Estimate of information collection annual hourly burden: 1,000 hours (rounded). The information to be collected will be obtained by telephone interviews, document requests, and a questionnaire. Staff will conduct telephone interviews with respondents, buyers of divested assets or businesses, and third parties (such as competitors, customers, and suppliers). The divestiture study includes a total of 51 divestitures arising out of 36 orders. Staff have already interviewed 32 buyers and 6 respondents; thus it will contact another 19 buyers and 30 respondents. It will also contact 153 third-parties (on average, three per divestiture) for a total of 202 remaining telephone interviews. All of the remaining interviews, like those already conducted, should take about 1.5 hours to complete, for a total burden estimate of approximately 303 hours.

After interviewing buyers and respondents, staff will ask them to submit financial documents for a five-year period beginning the year before the divestiture occurred. To the extent that no such financial documents exist, staff will not request that such documents be prepared. Because only documents already in existence will be requested, the anticipated burden of producing these documents will be minimal, approximately two hours per participant, for a total of 174 hours (51 buyers + 36 respondents=87, 87×2=174).

Staff is also asking respondents and buyers to complete a two-question chart that requests sales in dollars and units of the product that was the subject of the Commission's concern in the case over a five-year period beginning the year before the divestiture. Staff estimates that the burden on each participant to provide this information will be 4 hours, for a total of 348 hours (51 buyers + 36 respondents =87, 87×4=348). The total cumulative burden of the document production will be 522 hours (174+348). The estimated total burden for the entire study is therefore calculated to be 825 hours (303+522), which has been rounded to 1,000 hours to allow for small additions such as subsequent buyers of divested assets.

Estimate of Information Collection Annual Cost Burden: none.

Capital equipment/start-up/operation and maintenance/other non-labor costs: Not applicable. The date for the study are being collected in two principal ways. Staff is conducting telephone interviews and asking respondents to respond to a brief questionnaire. Neither the telephone interviews nor respondents' responses to questionnaires require any capital expenditure by respondents. Interviews solely involve respondents making available one or more company officials for approximately 1½ hours. The questionnaires ask respondents to provide only information that they maintain within the ordinary and usual course of their business. No additional cost burden is imposed on respondents.

Debra A. Valentine,

General Counsel.

[FR Doc. 98–12661 Filed 5–12–98; 8:45 am]

BILLING CODE 6750–01–M

DEPARTMENT OF HEALTH AND HUMAN SERVICES

Centers for Disease Control and Prevention

[Program Announcement 98054]

Programs for the Prevention of Fire Related Injuries; Notice of Availability of Funds for Fiscal Year 1998

Introduction

The Centers for Disease Control and Prevention (CDC), announces the availability of fiscal year (FY) 1998 funds for cooperative agreements for programs to prevent fire related injuries.

CDC is committed to achieving the health promotion and disease prevention objectives of ''Healthy People 2000,'' a national activity to reduce morbidity and mortality and improve the quality of life. This announcement is related to the priority area of Unintentional Injuries. (For ordering a copy of ''Healthy People 2000,'' see the Section ''WHERE TO OBTAIN ADDITIONAL INFORMATION.'')

Authority

This program announcement is authorized under Sections 301, 317, and 391A (42 U.S.C. 241, 247b, and 280b–280b–3) of the Public Health Service Act as amended.

Smoke-Free Workplace

CDC strongly encourages all grant recipients to provide a smoke-free workplace and to promote the nonuse of all tobacco products, and Public Law 103–227, the Pro-Children Act of 1994, prohibits smoking in certain facilities that receive Federal funds in which education, library, day care, health care, and early childhood development services are provided to children.

Eligible Applicants

Eligible applicants are the official State public health agencies or their bona fide agents. This includes the District of Columbia, American Samoa, the Commonwealth of Puerto Rico, the Virgin Islands, the Federated States of Micronesia, Guam, the Northern Mariana Islands, the Republic of the Marshall Islands, and the Republic of Palau.

Applicants funded under Program Announcement 780 are eligible to apply under this Announcement. The proposed target areas for this Announcement must be different than those currently being funded by CDC.

Note: Effective January 1, 1996, Public Law 104–65 states that an organization described in section 501(c)(4) of the Internal Revenue Code of 1986 which engages in lobbying activities shall not be eligible to receive Federal funds constituting an award, grant (cooperative agreement), contract, loan, or any other form.

Availability of Funds

Approximately $2,000,000 is available in FY 1998 to fund 11 to 13 awards, ranging from $150,000 to $170,000. It is expected that the award will begin on or about September 30, 1998, and will be made for a 12-month budget period within a project period of up to 3 years. Funding estimates may vary and are subject to change.

Continuation awards within the project period will be made on the basis of satisfactory progress and the availability of funds.

Restrictions on Lobbying

Applicants should be aware of restrictions on the use of HHS funds for lobbying of Federal or State legislative bodies. Under the provisions of 31 U.S.C. Section 1352 (which has been in effect since December 23, 1989), recipients (and their subtier contractors) are prohibited from using appropriated Federal funds (other than profits from a Federal contract) for lobbying Congress or any Federal agency in connection with the award of a particular contract, grant, cooperative agreement, or loan. This includes grants/cooperative agreements that, in whole or in part, involve conferences for which Federal funds cannot be used directly or indirectly to encourage participants to lobby or to instruct participants on how to lobby.

In addition, the FY 1998 Department of Labor, Health and Human Services, and Education, and Related Agencies Appropriations Act (Public Law 105–78) states in Section 503 (a) and (b) that no part of any appropriation contained in this Act shall be used, other than for normal and recognized executive-legislative relations, for publicity or propaganda purposes, for the preparation, distribution, or use of any kit, pamphlet, booklet, publication, radio, television, or video presentation designed to support or defeat legislation pending before the Congress or any State legislature, except in presentation to the Congress or any State legislature itself. No part of any appropriation contained in this Act shall be used to pay the salary or expenses of any grant or contract recipient, or agent acting for such recipient, related to any activity designed to influence legislation or appropriations pending before the Congress or any State legislature.

Prohibition on Use of CDC Funds for Certain Gun Control Activities

The Departments of Labor, Health and Human Services, and Education, and Related Agencies Appropriations Act, 1998 specifies that: ''None of the funds made available for injury prevention and control at the Centers for Disease Control and Prevention (CDC) may be used to advocate or promote gun control.

Anti-Lobbying Act requirements prohibit lobbying Congress with appropriated Federal monies. Specifically, this Act prohibits the use of Federal funds for direct or indirect communications intended or designed to influence a Member of Congress with regard to specific Federal legislation. This prohibition includes the funding and assistance of public grassroots campaigns intended or designed to influence Members of Congress with regard to specific legislation or appropriation by Congress.

In addition to the restrictions in the Anti-Lobbying Act, CDC interprets the new language in the CDC's 1998 Appropriations Act to mean that CDC's funds may not be spent on political action or other activities designed to affect the passage of specific Federal, State, or local legislation intended to restrict or control the purchase or use of firearms.

Background

In 1995, there were an estimated 414,000 home fires in the United States, which killed 3,640 individuals (1.4/100,000) and injured an additional 18,650 people. Accordingly, a Healthy People 2000 objective is the reduction of residential fire deaths to no more than 1.2 per 100,000 people by the Year 2000. Direct property damage caused by these fires exceeded $4.2 billion. In 1994, the monetary equivalent of all fire deaths and injuries, including deaths and injuries to fire fighters, was estimated at $14.8 billion.

Residential fire deaths occur disproportionately in the southeastern States. They also occur disproportionately during the winter months of December–February, a period during which more than one-third of home fires occur, compared to one-sixth in the summer months of June-August. Many subgroups within the population remain highly vulnerable to fire morbidity and mortality. The rate of death due to fire is higher among the poor, minorities, children under age 5, adults over age 65, low-income communities in remote rural areas or in poor urban communities, and among individuals living in manufactured homes built before 1976, when the U.S. Department of Housing and Urban Development construction safety standards became effective. Other risk factors for fire-related deaths include:

- Inoperative smoke alarms,
- Careless smoking,
- Abuse of alcohol or other drugs,
- Incorrect use of alternative heating sources including usage of devices inappropriate or insufficient for the space to be heated,
- Inadequate supervision of children, and
- Insufficient fire safety education.

The majority of fire-related fatalities occur in fires that start at night while occupants are asleep, a time when effective detection and alerting systems are of special importance. Operable smoke alarms on every level provide the residents of a burning home with sufficient advance warning for escape from nearly all types of fires. If a fire occurs, homes with functional smoke alarms are half as likely to have a death occur as homes without smoke alarms. As a result, operable residential smoke alarms can be highly effective in preventing fire-related deaths. It is important to understand that any smoke alarm—whether ionization or photoelectric, AC or battery powered—will offer adequate warning for escape, provided that the alarm is listed by an independent testing laboratory and is properly installed and maintained.

For Residential Fire Injury Prevention Programs the definition for high-risk target populations is a community (an area with no more than 50,000 people) or geographic area known to have: (1) a high prevalence of residential fire deaths, and (2) a composition of primarily low-income residents.

Community organizations for project collaboration may include churches, Salvation Army, Boy/Girl Scouts, Goodwill Industries, ethnic organizations, Meals on Wheels, National Guard, International Association of Black Fire Fighters, American Red Cross, SAFE KIDS Coalitions, thrift stores/charitable organizations, Area Agency on Aging, Senior Centers, private sector businesses, and Social clubs/community centers serving the target populations. This list is not exhaustive, as each community differs in their social make-up.

Purpose

The purpose of this cooperative agreement is to prevent fire-related injuries through the distribution and installation of smoke alarms in high-risk homes that do not have adequate smoke alarm coverage.

Cooperative Activities

In conducting activities to achieve the purpose of this program, the recipient will be responsible for the activities under A. (Recipient Activities), and CDC will be responsible for the activities listed under B. (CDC Activities).

A. Recipient Activities

1. Identify a minimum of two different communities with fire mortality and fire incidence rates above the State averages and mean household income below the poverty line.
2. In Year 01 implement the project in the identified targeted communities. Continue to run the project in all identified targeted communities during Years 02 and 03.
3. Provide program management oversight in collaboration with the local public health agencies in the identified targeted communities. Identify coordinators at the State and local levels.
4. Mobilize a minimum of three community organizations which already serve the target populations to provide education on fire safety and to distribute smoke alarms appropriate to residents' needs, (i.e. strobe-lighted for visually impaired persons, high-pitched for hearing impaired persons, etc.).
5. Collaborate with fire departments, firefighter associations, and fire safety coalitions at the local level.
6. Distribute appropriate alarms, as specific needs are identified, in communities with the highest rates of residential fire injury and death.
7. Facilitate installation of smoke alarms, as requested by residents, through collaboration with fire safety personnel and/or community workers who are trained in fire safety education, proper installation and placement of smoke alarms, adequate number of alarms for each home, smoke alarm maintenance and testing, fire escape planning and practice, etc.
8. Develop an evaluation plan that includes a comparison of pre-and post-intervention residential fire incidence, injuries, and deaths in intervention communities. Evaluation plan should include, as a minimum, follow-up assessment in each intervention community to determine the continued presence and functionality of program-installed smoke alarms.
9. Establish a system to track smoke alarms distributed by the program.

B. CDC Activities

1. Provide technical consultation on program planning, implementation, and evaluation methods.

2. Establish communication mechanisms among participating States by facilitating the transfer of technical and programmatic information and delivery methodology.

3. Provide technical assistance for management of program operations, including the application of continuous quality improvement.

4. Conduct ongoing assessment of program activities to ensure the use of effective and efficient implementation strategies.

5. Facilitate collaborative efforts to compile and disseminate program results through presentations and publications.

Technical Reporting Requirements

An original and two copies of semiannual progress reports (and an electronic copy submitted by electronic mail to the project officer) are required of all awardees. Time lines for the reports will be established at the time of award. Final financial status and performance reports are required no later than 90 days after the end of the project period. All reports will be submitted to the Grants Management Branch, Procurement and Grants Office, CDC.

Semiannual progress reports should include:

A. A brief, updated program description, and a one-page summary of bi-annual activities.

B. A status report on accomplishment of program goals and objectives, accompanied by a comparison of the actual accomplishments related to the goals and objectives established for the period. Include target population, intervention activities, collaborations, and progress on evaluation plan.

C. If established goals and objectives were not accomplished or were delayed, describe the reason for the deviation, the recommendation for corrective action or deletion of the activity, and lessons learned.

D. Other pertinent information, including changes in staffing, contractors, or partners.

Application Content

Each application, including appendices, should not exceed 70 pages and the Proposal; Narrative section should not exceed 30 pages. Pages should be clearly numbered and a complete index to the application and any appendices included. The project narrative section must be double-spaced. The original and each copy of the application must be submitted unstapled and unbound. All materials must be typewritten, double-spaced, with unreduced type (font size 10 point or greater) on 8–½'' by 11'' paper, with at least 1'' margins, headers and footers, and printed on one side only.

The applicant should provide a detailed description of first-year activities and briefly describe future year objectives and activities.

The application must include:

A. Abstract

A one page abstract and summary of the proposed program.

B. Background and Need:

Describe and quantify the magnitude of the residential fire problem within the State, providing background information that highlights the need for a residential fire prevention (smoke alarm promotion) program. Identify populations at risk based on analysis of residential fire data, including demographics of the State compared to the targeted communities.

C. Goals and Objectives:

Specify overall goals the applicant anticipates accomplishing by the end of the three-year project period. Include specific time-framed, measurable and achievable objectives which can be accomplished during the first budget period. Objectives should relate directly to the project goal to increasing the prevalence of functional smoke alarms in targeted communities.

D. Methods:

Describe how the residential fire injury prevention program will be implemented in the applicant's setting. Describe activities at the State and local levels that are designed to achieve each of the program objectives during the budget period. A time line should be included which indicates when each activity will occur and the assigned staff for each proposed activity. Include an organizational chart identifying placement of the residential fire-related injury prevention program. Describe how pre-and post-intervention residential fire incidence data will be compared as well as plans for conducting analyses. Provide a description of plans to educate residents in target communities on fire safety and smoke alarm installation and testing. Describe how records of smoke alarm distribution and promotional activities will be maintained and provided to the State coordinator.

Women, Racial and Ethnic Minorities. A description of the proposed plan for the inclusion of both sexes and racial and ethnic minority populations for appropriate representation.

E. Evaluation:

Provide a detailed description of the methods and design to evaluate program effectiveness, including what will be evaluated, data to be used, and the time frame. Document staff availability, expertise, and capacity to evaluate program activities and effectiveness, and demonstrate evaluation data availability. Evaluation should include progress in meeting the objectives and conducting activities on residential smoke alarm programs (process evaluation measures), and increasing residential smoke alarm prevalence and functionality (outcome measures).

F. Capacity and Staffing:

Describe the roles and responsibilities of the State Project Coordinator and each Local Program Coordinator. Provide letters of support from partnering agencies, sub-contractors, and consultants, documenting their concurrence and/or specific involvement in proposed program activities. Describe how a coalition of appropriate individuals, agencies, and grass root organizations will be organized to generate community input and support for smoke alarm promotion campaigns. Provide a description of the relationship between the program and community organizations, agencies, and health department units that are collaborating to implement the program. Specifically, identify and describe the role of State and/or local coalitions and their individual commitments. Letters of support from public safety officials should also be included if related activities are undertaken. Describe previous experience in implementing injury prevention programs, demonstrating the capacity to conduct a residential fire prevention program.

G. Budget and Accompanying Justification:

Provide a detailed budget with accompanying narrative justifying all individual budget items, which make up the total amount of funds requested. The budget should be consistent with stated objectives and planned activities. The budget should include funds for two trips to Atlanta by the State Project Coordinator and one trip for 2 Local Program Coordinators for skill building.

H. Human Subjects:

This section must describe the degree to which human subjects may be at risk and the assurance that the project will be subject to initial and continuing review by the appropriate institutional review committees.

Evaluation Criteria

Applications will be reviewed and evaluated according to the following criteria:

1. Background and Need (30 Percent)

The extent to which the applicant describes the magnitude of the residential fire injury problem in the State, and the extent to which low-income communities within the State are affected. Describe how the likely results of proposed activities will impact the problem.

2. Goals and Objectives (15 Percent)

The extent to which the goals and objectives are relevant to the purpose of the proposal, feasible for accomplishment during the project period, measurable, and specific in terms of what is to be done and the time involved. The extent to which the objectives address all activities necessary to accomplish the purpose of the proposal.

3. Methods (30 Percent)

The extent to which the applicant provides a detailed description of proposed activities, which are likely to achieve program goals and objectives, including individuals responsible for each action. The extent to which the applicant provides a reasonable and complete schedule for implementing activities. The extent to which position descriptions, lines of command, and collaborations are appropriate to accomplish program goals and objectives. The degree to which the applicant has met the CDC Policy requirements regarding the inclusion of women, ethnic, and racial groups in the proposed project. This includes: (a) The proposed plan for the inclusion of both sexes and racial and ethnic minority populations for appropriate representation; (b) The proposed justification when representation is limited or absent; (c) A statement as to whether the design of the study is adequate to measure differences when warranted; and (d) A statement as to whether the plans for recruitment and outreach for study participants include the process of establishing partnerships with community(ies) and recognition of mutual benefits will be documented.

4. Evaluation (15 Percent)

The extent to which the proposed evaluation plan is detailed and will document program implementation strategies and results (i.e. process and outcome objectives). The extent to which the applicant demonstrates staff and/or collaborator availability, expertise, and capacity to perform the evaluation.

5. Capacity and Staffing (10 Percent)

The extent to which the applicant can provide adequate facilities, staff and/or collaborators, and resources to accomplish the proposed goals and objectives during the project period. The extent to which the applicant demonstrates staff and/or collaborator availability, expertise, previous experience, and capacity to conduct the program successfully.

6. Budget and Justification (not scored)

The extent to which the applicant provides a detailed budget and narrative justification consistent with the stated objectives and planned program activities.

7. Human Subjects (not scored)

The extent to which the applicant complies with the Department of Health and Human Services Regulations (45 CFR Part 46)

Executive Order 12372

Applications are subject to Intergovernmental Review of Federal Programs as governed by Executive Order (E.O.) 12372. E.O. 12372 sets up a system for State and local government review of proposed Federal assistance applications. Applicants (other than federally recognized Indian tribal governments) should contact their State Single Point of Contact (SPOC) as early as possible to alert them to the prospective applications and receive any necessary instructions on the State process. For proposed projects serving more than one State, the applicant is advised to contact the SPOC of each affected State. A current list of SPOCs is included in the application kit. If SPOCs have any State process recommendations on applications submitted to CDC, they should forward them to Ron Van Duyne, III, Grants Management Officer, ATTN: Joanne Wojcik, Grants Management Branch, Procurement and Grants Office, Centers for Disease Control and Prevention (CDC), 255 East Paces Ferry Road, NE., Room 300, Mailstop E–13, Atlanta, GA 30305, no later than 60 days after the application deadline. The granting agency does not guarantee to ''accommodate or explain'' for State process recommendations it receives after that date.

Public Health System Reporting Requirements

This program is not subject to the Public Health System Reporting Requirements.

Catalog of Federal Domestic Assistance Number

The Catalog of Federal Domestic Assistance (CFDA) number for this project is 93.136.

Other Requirements

Human Subjects Requirements

If a project involves research on human subjects, assurance (in accordance with Department of Health and Human Services Regulations, 45 CFR Part 46) of the protection of human subjects is required. In addition to other applicable committees, Indian Health Service (IHS) institutional review committees also must review the project if any component of IHS will be involved with or will support the research. If any American Indian community is involved, its Tribal government must also approve that portion of the project applicable to it. Unless the grantee holds a Multiple Project Assurance, a Single Project Assurance is required, as well as an assurance for each subcontractor or cooperating institution that has immediate responsibility for human subjects.

The Office for Protection from Research Risks (OPRR) at the National Institutes of Health (NIH) negotiates assurances for all activities involving human subjects that are supported by the Department of Health and Human Services.

Requirements for Inclusion of Women and Racial and Ethnic

Minorities in Research

It is the policy of the Centers for Disease Control and Prevention (CDC) and the Agency for Toxic Substances and Disease Registry (ATSDR) to ensure that individuals of both sexes and the various racial and ethnic groups will be included in CDC/ATSDR-supported research projects involving human subjects, whenever feasible and appropriate. Racial and ethnic groups are those defined in OMB Directive No. 15 and include American Indian or Alaska Native, Asian, Black or African American, Hispanic or Latino, Native Hawaiian or Other Pacific Islander. Applicants shall ensure that women, racial and ethnic minority populations are appropriately represented in applications for research involving human subjects. Where clear and compelling rationale exist that inclusion is inappropriate or not feasible, this situation must be explained as part of the application. This policy does not apply to research studies when the investigator cannot control the race, ethnicity, and/or sex of subjects. Further

guidance to this policy is contained in the **Federal Register**, Vol. 60, No. 179, pages 47947–47951, and dated Friday, September 15, 1995.

Paperwork Reduction Act

Projects that involve the collection of information from 10 or more individuals and funded by the cooperative agreement will be subject to review by the Office of Management and Budget (OMB) under the Paperwork Reduction Act.

Application Submission and Deadline

The original and two copies of the application PHS Form 5161–1 (Revised 7/92, OMB Control number 0937–0189) must be submitted to Joanne Wojcik, Grants Management Specialist, Grants Management Branch, Procurement and Grants Office, Centers for Disease Control and Prevention (CDC), 255 East Paces Ferry Road, NE., Room 300, Mailstop E–13, Atlanta, GA 30305, on or before July 14, 1998.

1. Deadline: Applications shall be considered as meeting the deadline if they are either:

a. Received on or before the deadline date; or

b. Sent on or before the deadline date and received in time for submission to the independent review committee. For proof of timely mailing, applicant must request a legibly dated U.S. Postal Service postmark or obtain a legibly dated receipt from a commercial carrier or the U.S. Postal Service. Private metered postmarks will not be acceptable as proof of timely mailing.

2. Late Applications: Applications that do not meet the criteria in 1.a. or 1.b. above are considered late applications. Late applications will not be considered in the current competition and will be returned to the applicant.

Where To Obtain Additional Information

The program announcement and application forms may be downloaded from internet: www.cdc.gov (look under funding). You may also receive a complete application kit by calling 1–888-GRANTS4. You will be asked to identify the program announcement number and provide your name and mailing address. A complete announcement kit will be mailed to you.

If you have questions after reviewing the forms, for business management technical assistance contact Joanne Wojcik, Grants Management Specialist, Grants Management Branch, Procurement and Grants Office, Centers for Disease Control and Prevention (CDC), 255 East Paces Ferry Road, NE., Mailstop E–13, Atlanta, GA 30305, Internet: jcw6@cdc.gov, telephone (404) 842–6535.

Programmatic assistance may be obtained from Mark Jackson, R.S., National Center for Injury Prevention and Control, Centers for Disease Control and Prevention (CDC), 4770 Buford Highway, NE., Mailstop K–63, Atlanta, GA 30341–3724, telephone (770) 488–4652.

Please refer to Announcement 98054 when requesting information and submitting an application.

The potential applicant may obtain a copy of ''Healthy People 2000'' (Full Report, Stock No. 017–001–00474–0) or ''Healthy People 2000'' (Summary Report, Stock No. 017–001–00473–1) referenced in the INTRODUCTION through the Superintendent of Documents, Government Printing Office, Washington, DC 20402–9325, telephone (202) 512–1800.

A copy of American Society for Testing and Materials (ASTM) Number 1292 may be obtained from ASTM, Customer Services, 1916 Race Street, Philadelphia, PA 19103–1187, telephone (215) 299–5585.

Dated: May 7, 1998.

Joseph R. Carter,

Acting Associate Director for Management and Operations Centers for Disease Control and Prevention (CDC).

[FR Doc. 98–12644 Filed 5–12–98; 8:45 am]

BILLING CODE 4163–18–P

DEPARTMENT OF HEALTH AND HUMAN SERVICES

Centers for Disease Control and Prevention

[Program Announcement 98046]

National Comprehensive Cancer Control Program; Notice of Availability of Fiscal Year 1998 Funds

Introduction

The Centers for Disease Control and Prevention (CDC) announces the availability of funds in fiscal year (FY) 1998 for cooperative agreements to implement comprehensive cancer control plans.

CDC is committed to achieving the health promotion and disease prevention objectives of ''Healthy People 2000,'' a national activity to reduce morbidity and mortality and to improve the quality of life. This announcement is related to the priority area of Cancer. (To order a copy of ''Healthy People 2000,'' see the section ''Where To Obtain Additional Information.'')

Authority

This program is authorized by Sections 317 and 1507 [42 U.S.C. 247b] and [42 U.S.C. 300n–3] of the Public Health Service Act, as amended.

Smoke-Free Workplace

CDC strongly encourages all grant recipients to provide a smoke-free workplace and to promote the nonuse of all tobacco products, and Public Law 103–227, the Pro-Children Act of 1994, prohibits smoking in certain facilities that receive federal funds in which education, library, day care, health care, and early childhood development services are provided to children.

Eligible Applicants

Assistance will be provided only to the official public health agencies of States or their bona fide agents, including the District of Columbia, the Commonwealth of Puerto Rico, the Virgin Islands, the Commonwealth of the Northern Mariana Islands, American Samoa, Guam, federally recognized Indian tribal governments, the Federated States of Micronesia, the Republic of the Marshall Islands, and the Republic of the Palau. In consultation with States, assistance may be provided to political subdivisions of States.

Applicants must complete the Eligibility Assurance Form included in the application packet and must attach a reproducible copy of the State/Tribe/Territory's comprehensive Cancer Control Plan to that form. Only one eligible application from a State/Tribe/Territory will be funded. Applicants from each State/Tribe/Territory are encouraged to coordinate and combine their efforts prior to submitting the application for their State/Tribe/Territory.

Availability of Funds

Approximately $1.5 million is available in FY 1998 to fund approximately 5 awards. It is expected that the average award will be $300,000 ranging from $250,000 to $350,000. It is expected that these awards will begin on or about September 30, 1998, and will be made for 12-month budget periods within a project period of up to 4 years. Funding estimates may vary and are subject to change.

Continuation awards within the project period will be made on the basis of satisfactory progress as evidenced by required reports and the availability of funds.

Use of Funds

These funds are intended for comprehensive cancer control and

should not be used to directly support other existing programs such as breast and cervical cancer programs, cancer registry programs, laboratory or clinical services, or tobacco control programs. These funds should be used to assist with the coordination of these and other categorical programs into comprehensive cancer control activities. Funds awarded under this program announcement may not be used to supplant existing program efforts.

Comprehensive cancer control activities should adhere to current accepted public health recommendations by the U.S. Preventive Services Task Force, or current Division of Cancer Prevention and Control (DCPC) guidance (See Section on Where To Obtain Additional Information).

In the event that additional federal categorical funding becomes available under this announcement, Grantees must coordinate and integrate newly funded activities into the existing National Comprehensive Cancer Control Program.

Restrictions on Lobbying

Applicants should be aware of restrictions on the use of HHS funds for lobbying of Federal or State legislative bodies. Under the provisions of 31 U.S.C. Section 1352 (which has been in effect since December 23, 1989), recipients (and their subtier contractors) are prohibited from using appropriated Federal funds (other than profits from a Federal contract) for lobbying congress or any Federal agency in connection with the award of a particular contract, grant, cooperative agreement, or loan. This includes grants/cooperative agreements that, in whole or in part, involve conferences for which Federal funds cannot be used directly or indirectly to encourage participants to lobby or to instruct participants on how to lobby.

In addition, the FY 1998 Department of Labor, Health and Human Services, and Education, and Related Agencies Appropriations Act (Public Law 105–78) states in Section 503 (a) and (b) that no part of any appropriation contained in this Act shall be used, other than for normal and recognized executive-legislative relationships, for publicity or propaganda purposes, for the preparation, distribution, or use of any kit, pamphlet, booklet, publication, radio, television, or video presentation designed to support or defeat legislation pending before the Congress or any State Legislature, except in presentation to the Congress or any State legislature itself. No part of any appropriation contained in this Act shall be used to pay the salary or expenses of any grant or contract recipient, or agent acting for such recipient, related to any activity designed to influence legislation or appropriations pending before the Congress or any State legislature.

Background

In the United States, cancer is the second leading cause of death, exceeded only by heart disease. Among adults younger than 65 years, cancer is the leading cause of death and is rapidly overtaking heart disease as the primary cause of death among older Americans (Kennedy 1994). One of every four deaths in the United States is from cancer with approximately 564,800 people expected to die of cancer this year (American Cancer Society 1998). The overall cancer death rate has been steadily rising in the United States during the last 50 years. The age-adjusted death rate in 1950 was 127.7 per 100,000 population (National Center for Health Statistics 1968); it rose to 129.9 per 100,000 in 1995 (National Center for Health Statistics 1997).

While cancer currently is a major cause of morbidity and mortality in the United States, a large proportion of cancer could be controlled through prevention, early detection, and treatment. In recent years, DCPC has worked with state and local health agencies to increase the number and quality of cancer-related programs that are available to the U.S. population. New organizational structures, increased professional expertise, improved understanding of the challenges of delivering community-based health education and health promotion and an increased ability to demonstrate program accountability to program funders have reinforced the public health infrastructure available for cancer prevention and control at the national, State and community levels. In addition, in 1997, an American Cancer Society-appointed Blue Ribbon Advisory Group on Community Cancer Control recommended that prevention be a primary goal and focus. (American Cancer Society 1997).

The majority of the programs developed by CDC are categorical in nature, i.e., built around specific cancer sites or risk factors. For example, CDC has developed important initiatives and programs to address breast and cervical cancer, skin cancer, colorectal cancer, prostate cancer, oral cancer, nutrition and physical activity, and tobacco control; these categorical programs indicate impressive accomplishments in their areas. However, coordination and collaboration among these programs are uncommon, often leading to duplication of effort and missed opportunities for cancer prevention and control at the community level.

In 1994, DCPC initiated discussions related to the coordination and integration of cancer prevention and control programs across categorical boundaries. DCPC sponsored a number of activities to explore options for comprehensive cancer control. One of the key tasks was to develop a working definition of comprehensive cancer control. The following definition was determined to be encompassing and appropriate for future planning and implementation activities:

Comprehensive cancer control—an integrated and coordinated approach to reduce the incidence, morbidity and mortality [of cancer] through prevention, early detection, treatment, rehabilitation, and palliation.

Purpose

The purpose of this program is to support States/Tribes/Territories in the implementation of up-to-date State/Tribe/Territory wide comprehensive cancer control plans. (See Glossary for definitions of comprehensive cancer control plan and comprehensive cancer control program.)

Program Requirements

Recipients of this funding should adhere to current accepted public health recommendations based on the U.S. Preventive Services Task Force, or current DCPC guidance (See Section on Where To Obtain Additional Information).

In conducting activities to achieve the purpose of this program, the recipient of this cooperative agreement will be responsible for the activities under A. (Recipient Activities), and CDC will be responsible for conducting activities under B. (CDC Activities).

A. Recipient Activities

1. Identify and hire necessary key staff to implement the comprehensive cancer control plan.

2. Maintain or enhance a broad-based state/tribe/territorywide cancer control coalition that includes representation from throughout the state/tribe/territory health department, as well as key private, professional, voluntary, and nonprofit cancer control organizations, policymakers, consumers (including cancer survivors), payors, media, State and federal agencies, cancer registries, research and academic institutions, schools, etc.

3. Implement priorities as established by the State/Tribe/Territory's comprehensive cancer control plan, which provides a framework for

planning and action to reduce the burden of cancer in the State/Tribe/Territory. Implementation should be guided by goals and objectives documented in the implementation plan included in this application.

4. Promote collaboration and coordination among existing State/Tribe/Territory-based surveillance systems (e.g., the statewide Central Cancer Registry, Surveillance, Epidemiology, and End Results, (SEER), vital statistics, and other databases, including Behavioral Risk Factor Surveillance System (BRFSS), for use in monitoring changes in cancer disease burden and programmatic impact of the comprehensive cancer control efforts. Data should be used for program modifications and improvements, evaluation, and updating the comprehensive cancer control plan, as appropriate.

5. Evaluate progress and impact of the program based on a systematic evaluation plan. In addition to evaluating progress in meeting goals, process and impact objectives as stated in the implementation plan, the programs should develop performance indicators to use as benchmarks for improvement and to determine the success of the overall comprehensive cancer control effort.

6. Promote the development and dissemination of information and education programs that will contribute to comprehensive cancer control; and participate in CDC-developed national cancer prevention, early detection, and control campaigns. Programs should use existing education resources as well as develop materials and activities that address specific needs of their populations, as necessary and appropriate. School health education and policies should be considered as part of these strategies. In addition to addressing educational needs of the targeted populations, programs should also consider activities that attempt to make individual, policy, organizational or environmental interventions and changes that can encourage primary prevention at all levels, e.g., organizational changes that can reinforce and support individual behavior changes.

7. Participate in CDC-sponsored trainings, meetings, site visits, and conferences.

B. CDC Activities

1. Convene meetings for information-sharing or training among recipients of cooperative agreements.

2. Facilitate the exchange of information and collaboration among recipients.

3. Disseminate to recipients relevant state-of-the-art research findings and public health recommendations related to comprehensive cancer control.

4. Provide ongoing guidance, consultation, and technical assistance in conducting Recipient Activities.

5. Conduct site visits to assess program progress, and mutually resolve problems, as needed, and coordinate reverse site visits to CDC in Atlanta, Georgia.

6. Identify and develop national cancer prevention and control campaigns and materials that can be integrated into comprehensive cancer control programs; facilitate coordination between programs and CDC on national campaigns.

Technical Reporting Requirements

An original and two copies of an annual progress report must be submitted 30 days after the end of each budget period. These progress reports must include: (1) a comparison of actual accomplishments to the goals and objectives established for the period; (2) activities and other issues to be addressed during the subsequent reporting period. The final performance report is required no later than 90 days after the end of the project period.

Annual financial status report (FSR) must be submitted no later than 90 days after the end of each budget period. The final financial status and progress reports are required no later than 90 days after the end of the project period. All reports are submitted to Grants Management Branch, CDC.

Application Content

All applicants must develop their applications in accordance with information contained in this program announcement and the instructions below. Applications should not exceed 30 double-spaced pages (no smaller than 10 point type) including budget and justification. Applicants should also submit appendices (including CVs, job descriptions, organizational chart, and any other supporting documentation), which should not exceed an additional 20 pages. All materials must be provided in an unbound, one-sided, 8½ x 11″ print format, suitable for photocopying (i.e., no audiovisual materials, posters, tapes, etc.). A reproducible copy of the State/Tribe/Territory's comprehensive cancer control plan (attached to the Eligibility Assurance Form), and the letters of support should be included in separate tabbed sections of the application. (The comprehensive cancer control plan and letters of support are not included in the page limit for the application or appendices.)

I. Executive Summary

The applicant should provide a clear, concise one to two page written summary to include:

A. The need for implementing the comprehensive cancer control plan.

B. The major proposed objectives and activities for implementation of the comprehensive cancer control plan.

C. The requested amount of federal funding.

D. Applicant's capability to implement the comprehensive cancer control plan.

II. Background and Need

The applicant should describe:

A. The cancer disease burden for their State/Tribe/Territory:

1. The most recently available State/Tribe/Territory, age-adjusted, overall cancer incidence and mortality rates by age, gender, and racial and ethnic groups. Please cite the source for and time period covered by these data.

2. The estimated State/Tribe/Territory cancer incidence and mortality rates for 1998.

(Please refer to the section on ''Where To Obtain Additional Information'' for possible data sources.)

B. Relevant experiences in the development and implementation of cancer prevention and control programs.

C. Relevant experiences in coordination and collaboration between and among existing programs.

D. Existing initiatives, capacity, and infrastructure (e.g., coalition and partnerships; surveillance activities and systems; evaluation activities; information, media and health communications, education and outreach strategies) on which a coordinated comprehensive cancer control program will be established.

E. Description of the need for comprehensive cancer control funding to enhance existing efforts.

III. Collaborative Partnership and Community Involvement

The applicant should include:

A. A description of proposed linkages to coordinate within the State/Tribe/Territory health department (e.g., across risk factors, categorically funded programs, disciplines), with other key private, professional, voluntary, and non-profit cancer control organizations, policymakers, consumers (including cancer survivors), payors, federal, State and local agencies, research and academic institutions, schools, and other groups, agencies, and businesses in the community that provide health care and related human services.

B. A description of the proposed broad-based State/Tribe/Territory wide coalition that will advise and support the program, including the identification of current members or proposed representatives, their charge, and proposed roles and responsibilities. Taking a broad cancer prevention and control perspective, the State/Tribe/Territory should consider including a wide range of representatives from risk factor and other public health programs that address cancer-related issues such as, nutrition, environmental, oral health, and school health activities. Specific subcommittees and the rationale for these subcommittees of the coalition should be described.

C. Letters of support (in a separate tabbed section of the application) that indicate the nature and extent of existing or planned collaborative support.

IV. Cancer Control Plan

The applicant should:

A. Submit a copy of the (a) current existing state/tribe/territory wide comprehensive cancer control plan, or (b) a current detailed final draft plan. Attach a reproducible, one-sided, 8½ x 11″ unbound copy of the plan, to the completed Eligibility Assurance Form. A comprehensive cancer control plan should include:

1. An assessment of cancer burden in the State/Tribe/Territory using population-based data.

2. Short-term and long-term goals and objectives to address cancer control issues within the State/Tribe/Territory based on identified needs.

3. Proposed strategies to meet the objectives.

4. An assessment of existing and needed resources to implement the comprehensive cancer control priorities.

5. The full range of cancer prevention and control activities, including primary prevention, early detection, diagnosis, treatment, rehabilitation and palliation.

B. Describe the process by which the plan was developed. (If the plan is in draft, describe the process for assuring readiness for implementation by September 30, 1998.) Include a description of the participating agencies' and organizations' involvement in the development of the plan. Clearly describe a mechanism to review, evaluate, and update the plan to meet evolving needs.

C. Describe who will be responsible for maintaining the comprehensive cancer control plan and assuring that the coalition is involved throughout the process, and that comprehensive cancer control efforts proceed according to the State/Tribe/Territory's plan.

V. Implementation of the Comprehensive Cancer Control Plan

The successful coordination and integration of cancer activities, based on the comprehensive cancer control plan, requires that priorities be determined based on a clear data-driven rationale and justification.

The applicant should include an implementation plan that:

A. Describes the process for determining priorities to be addressed in implementing the comprehensive cancer control plan, the process for assuring that these decisions are data-based and grounded in sound science, and the role of the coalition and/or collaborators in the priority-setting process.

B. Includes specific, measurable, attainable, realistic, and time-framed process and outcome objectives designed to achieve goals identified in the comprehensive cancer control plan. The implementation plan for this RFA need not address each goal and objective outlined in the comprehensive cancer control plan; the applicant should make clear how goals and objectives resulting from the priority-setting process relate to the comprehensive cancer control plan.

C. Provides a description of the process for implementing goals and objectives for the identified priorities of the comprehensive cancer control plan. This should include discrete timeframes; responsible agencies, organizations, or organizational units; and activities proposed to meet the objectives within the comprehensive cancer control plan. It should also include a description of how the proposed activities will facilitate coordination and cooperation among existing categorical program efforts. The applicant should include goals for all four years, and specific objectives for Year 01.

D. Describes how surveillance data will be integrated into program activities and used to assess program progress, and inform program decision making.

Description should include evidence that existing surveillance systems enable programs to do the following:

1. Collect population-based information on the demographics, incidence, staging of cancer at diagnosis, morbidity and mortality from cancer. Mechanisms should be in place to ensure timeliness, quality, and completeness of data.

2. Identify segments of the population who are at higher risk for incidence, morbidity, and mortality.

3. Identify factors contributing to the disease burden, such as behavioral risk factors and limited or inequitable access to services.

4. When appropriate, monitor the number and characteristics of people served by relevant programs.

5. When appropriate, develop linkages between the above-mentioned data bases and routinely monitor to determine the effectiveness of interventions.

E. Includes the current or proposed plan for evaluating (1) the program's progress in meeting specific objectives outlined in the implementation plan, and (2) overall success of the comprehensive cancer control effort, based on indicators established by the applicant. Describe the types of indicators to be used to assess outcomes such as coordination, integration and collaboration that have occurred as a result of this funding. Such indicators might assess organizational or institutional changes, reduced duplication of effort, environmental and policy changes. Baseline measures should be identified and assessed, to allow for comparisons after implementation has begun. For each type of evaluation, specify the kind of data/indicator that will be used, how the data will be obtained, how information will be used to improve the overall program, as well as individual program components, who is responsible for each evaluation task, and a time line for accomplishing each evaluation task.

F. Describes proposed information and education efforts. Identify the mechanisms through which information, material, and successful strategies will be consistently and systematically shared and disseminated at the State/Tribe/Territory and local levels, as well as with other cooperative agreement recipients. Include in this description a discussion of plans for collaborating with CDC on national campaigns or educational efforts.

G. Describes mechanism for assuring that the core components of a comprehensive cancer control program including primary prevention/risk factor reduction; education, outreach, health communications; screening, diagnostic, and treatment services; surveillance; and evaluation are consistent with accepted science and prevailing standards of public health practice. The primary prevention components should address risk factors that will have the greatest impact on reducing the overall disease burden of cancer and are not limited to prevention activities of the specific cancers addressed in the State/Tribe/Territory's comprehensive cancer control program.

H. Describes existing programs funded by other sources that will be coordinated with the comprehensive cancer control effort.

VI. Management and Organization

The applicant should:

A. Submit a management plan that includes a description of the proposed management structure that addresses the use of qualified and diverse technical, program, and administrative staff (including in-kind staff), organizational relationships including lines of authority, internal and external communication systems, and a system for sound fiscal management. Minimal staffing should include a full-time program coordinator. The management structure description should include discussion of the integration and coordination of risk factor and cancer-related programs and activities. It is important that the management plan address how coordination and cooperation among existing categorical program efforts will be facilitated, while allowing each program to maintain individual integrity and identity.

B. Provide (in the appendices) a copy of the organizational chart indicating the placement of the proposed program in the department or agency. The chart should clearly demonstrate internal linkages necessary for comprehensive cancer control planning, implementation and evaluation.

C. Provide (in the appendices) CVs and job descriptions of key staff to be partially or fully funded through this RFA, as well as any staff to be providing in-kind support. Applicant should clearly indicate who is responsible for overall direction of the program.

VII. Budget With Justification

The applicant should provide a detailed budget request and complete line item justification of all proposed operating expenses consistent with the Recipient Activities. If in-kind contributions are being provided by the applicant, these should be documented.

The annual budget should include funds for two staff members to make two two-day trips to Atlanta.

Non-Competing Continuation Application Content

In compliance with 45 C.F.R. 92.10(b)(4), as applicable, noncompeting continuation applications submitted within the project period need only include:

A. A progress report describing the accomplishments made from award date to the date of the continuation application. These progress reports must include: (1) a comparison of actual accomplishments with the goals and objectives established for the period, and

(2) other activities and issues to be addressed during the subsequent reporting period.

B. Any new or significantly revised items or information (objectives, scope of activities, operational methods, evaluation, etc.) not included in the Year 01 application.

C. An annual budget and justification. Existing budget items that are unchanged from the previous budget period do not need rejustification. Simply list the items in the budget and indicate that they are continuation items. Supporting justification should be provided where appropriate.

Evaluation Criteria (Total 100 Points)

Objective Review panels evaluate the scientific and technical merit of applications and their responsiveness to the information requested in the Application Content section above. Applications will be reviewed and evaluated according to the following criteria:

I. Background and Need (10 points)

The extent of need based on disease burden by age, gender, and racial and ethnic groups, mortality rates, incidence, cancer program experience, existing capacity and infrastructure, and funding need.

II. Collaborative Partnership and Community Involvement (15 points)

The comprehensiveness and appropriateness of:

A. Existing or proposed linkages within and outside the State/Tribe/Territory health department to coordinate diverse cancer control, risk factor and other primary prevention programs and activities among various agencies, organizations, professional groups, and individuals.

B. The current or proposed broad-based State/Tribe/Territory wide coalition to advise and support the program, including defined roles, responsibilities, and specified subcommittees.

C. Letters of support that indicate the nature and extent of existing or planned collaborative support.

III. Cancer Control Plan (15 points)

The quality of the comprehensive cancer control plan in terms of:

A. An integrated and coordinated State/Tribe/Territory wide approach to prevention, early detection, treatment, rehabilitation, and palliation of cancer; assessment of the State/Tribe/Territory's cancer burden; short-term and long-term goals, objectives, and strategies to address cancer control issues; assessment of existing and needed resources to develop the comprehensive cancer control program; the full range of cancer prevention and control activities, including primary prevention, early detection, diagnosis, treatment, rehabilitation and palliation.

B. The extent to which a broad range of partners and stakeholders are included throughout the process to develop, implement, review, and update the plan; mechanisms to review, evaluate and update the plan to meet evolving needs, and personnel who will be responsible for maintaining the plan, assuring that it is current and regularly reviewed and updated are clearly identified.

IV. Implementation of the Comprehensive Cancer Control Plan (35 points)

The extent to which the applicant's implementation plan describes:

A. Process, justification, and rationale for priorities established for implementation.

B. Specific, measurable, realistic, time-framed objectives based on the comprehensive cancer control plan.

C. The process for implementing priorities identified in the plan, to include discrete time frames, responsible agencies and organizations, linkages of activities to objectives, and how the proposed activities will facilitate coordination and collaboration among existing categorical program efforts.

D. How surveillance data will be integrated into program activities and used to assess program progress and assist program decision making; the surveillance systems and collection of relevant and appropriate population-based information on the demographics, behavioral, disease burden and incidence, etc.; and any linkages between databases and routine monitoring to determine effectiveness of interventions.

E. Plans for evaluating the program's progress in meeting specific objectives outlined in the implementation plan, and overall success of the comprehensive cancer control effort.

F. Proposed information and education efforts, including collaborating with CDC on national campaigns.

G. Methods for assuring that: the core components of a comprehensive cancer control program including primary prevention/risk factor reduction; education, outreach, and health communications; screening, diagnostic, and treatment services; surveillance;

and evaluation are consistent with accepted science and prevailing public health practice; the primary prevention components address risk factors that will have the greatest impact on reducing the overall disease burden of cancer and are not limited to prevention activities of the specific cancers addressed in the State/Tribe/Territory's comprehensive cancer control program.

H. Description of other existing programs funded by other sources that will be coordinated with the comprehensive cancer control effort.

V. Management and Organization (25 points)

A. The feasibility and clarity of the proposed management plan that addresses the use of qualified and diverse technical, program, and administrative staff, organizational relationships including lines of authority, internal and external communication systems, cooperation and coordination among categorical cancer-related programs, and a system for sound fiscal management.

B. The appropriateness of the organizational structure and the existing and proposed internal and external linkages.

C. The quality and appropriateness of CVs and job descriptions of current and proposed key staff, to include who is responsible for overall direction of the program.

VI. Budget With Justification (Not Weighted)

The extent to which the proposed budget is adequately justified, reasonable, and consistent with this program announcement.

Executive Order 12372 Review

Applications are subject to Intergovernmental Review of Federal Programs as governed by Executive Order 12372. This order sets up a system for State/Territory/Tribe and local review of proposed federal assistance applications. Applicants should contact their State Single Point of Contact (SPOC) as early as possible to alert them to expected announcements of cooperative agreement funds and receive any necessary instructions on the State process. For proposed projects serving more than one State, the applicant is advised to contact the SPOC of each State. A current list of SPOCs is included in the application kit. Indian territories are strongly encouraged to request tribal government review of the proposed application. If tribal governments have any tribal process recommendations or if SPOCs have any State process recommendations on applications submitted to CDC, they should send them to Sharron P. Orum, Grants Management Officer, Grants Management Branch, Procurement and Grants Office, Centers for Disease Control and Prevention (CDC), 255 East Paces Ferry Road, NE., Room 305, Mailstop E–18, Atlanta, GA 30305, no later than 60 days after the application deadline date. The Program Announcement Number and Program Title should be referenced on the document. The granting agency does not guarantee to accommodate or explain the State or tribal process recommendations it receives after that date.

Public Health System Reporting Requirements

This program is not subject to the Public Health System Reporting Requirements.

Catalog of Federal Domestic Assistance Number

The Catalog of Federal Domestic Assistance Number is 93.919.

Other Requirements

Paperwork Reduction Act

Projects that involve the collection of information from 10 individuals or more and funded by cooperative agreement will be subject to review by the Office of Management and Budget (OMB) under the Paperwork Reduction Act.

Application Submission and Deadline

The original and two copies of the completed application Form CDC 0.1246(E) (OMB Number 0348–0043) must be submitted to Sharron P. Orum, Grants Management Officer, Grants Management Branch, Procurement and Grants Office, Centers for Disease Control and Prevention (CDC), 255 East Paces Ferry Road, NE., Room 314, Mailstop E–18, Atlanta, GA 30305 on or before July 1, 1998.

1. Applications shall be considered as meeting the deadline if they are either:

a. Received on or before the stated deadline date; or

b. Sent on or before the deadline date and received in time for submission to the objective review group. (Applicants must request a legibly dated U.S. Postal Service postmark or obtain a legibly dated receipt from a commercial carrier or the U.S. Postal Service. Private metered postmarks shall not be accepted as proof of timely mailing.)

2. Late Applications. Applications that do not meet the criteria in 1.a. or 1.b., above, are considered late applications. Late applications will not be considered in the current competition and will be returned to the applicant.

3. Acceptable Materials. Applicants must send all materials in an unbound, one-sided 8½ x 11″ printed format, suitable for photocopying. All other application materials will not be reviewed.

4. Only one eligible application from a State/Tribe/Territory will be funded. Applicants from each State/Tribe/Territory are encouraged to coordinate and combine their efforts prior to submitting the application for their State/Tribe/Territory.

Where To Obtain Additional Information

Complete information on application procedures is contained in the application package. Business management technical assistance may be obtained from Gladys T. Gissentanna, Grants Management Specialist, Grants Management Branch, Procurement and Grants Office, Centers for Disease Control and Prevention (CDC), 255 East Paces Ferry Road, NE., Room 314, Mailstop E–18, Atlanta, GA 30305, telephone (404) 842–6801; by fax (404) 842–6513; by Internet or CDC WONDER electronic mail at gcg4@cdc.gov.

Programmatic technical assistance may be obtained from Jeannette May, MPH, or Diane Narkunas, MPH, Program Services Branch, Division of Cancer Prevention and Control, National Center for Chronic Disease Prevention and Health Promotion, Centers for Disease Control and Prevention (CDC), 4770 Buford Highway, NE., Mailstop K–57, Atlanta, GA 30341–3717, telephone (404) 488–4880 and by fax (404) 488–4727; by Internet or CDC WONDER electronic mail at jxm5@cdc.gov or dxn3@cdc.gov.

Please refer to Program Announcement Number 98046 when requesting information and submitting an application.

Potential applicants may obtain a copy of ''Healthy People 2000'' (Full Report, Stock No. 017–001–00474–0) or ''Healthy People 2000'' (Summary Report, Stock No. 017–001–00473–1) referenced in the Introduction through the Superintendent of Documents, Government Printing Office, Washington, DC 20402–9325; telephone (202) 512–1800.

Copies of the U.S. Preventive Services Task Force Guide to Clinical Preventive Services, 2nd ed. (Williams & Wilkins, October 1995) referenced above may be obtained by calling 1–800–358–3538, or from the world wide web at http://www.wwilkins.com/books/data/0–683–08508–5.html.

Data on cancer incidence and mortality can be obtained from the following sources:

1. The State Cancer Registry.
2. The American Cancer Society, Facts and Figures, 1998. 1–800–ACS–2345.
3. Mortality Statistics Branch, Division of Vital Statistics, National Center for Health Statistics, Centers for Disease Control and Prevention at (301) 436–8884, fax (301) 436–7066. Available at http://www.cdc.gov/nchswww/about/major/dvs/mortdata.htm.
4. SEER Cancer Statistics Review, 1973–1994, NIH Pub. No. 97–2789. Available at http://www-seer.ims.nci.nih.gov/Publications/CSR7394/index.html or by calling the Cancer Statistics Branch Cancer Control Research Program Division of Cancer Prevention and Control, National Cancer Institute at (301) 496–8510.

CDC suggests using the Internet, following all instructions in this announcement and leaving messages on the contact person's voice mail for more timely responses to any questions.

Eligibility Assurance Form

All applicants MUST complete this check-list and attach appropriate documentation supporting eligibility (the state/tribe/territory wide comprehensive cancer control plan). The plan must be attached to this check-list, should not be incorporated into the body of the application or the appendices, and therefore does not affect the page limit for the application (30 pages) or appendices (20 pages). A copy of this form, with an attached reproducible plan, should be included with each copy of the application as a separate tabbed section.

____A state/tribe/territory wide comprehensive cancer control plan has been developed. Plan is either:

____an existing up-to-date plan ready for implementation, or

____an up-to-date detailed final draft ready for implementation by September 30, 1998.

At a minimum,

____Plan documents an integrated and coordinated state/tribe/territory wide approach to prevention, early detection, treatment, rehabilitation, and palliation of cancer (i.e., not a summation or compilation of categorical risk factor/specific cancer programs).

____ Plan identifies priorities to be addressed based on needs identified through assessment of the burden of the major detectable/preventable cancers in the State/Tribe/Territory.

____Copy of the State/Tribe/Territory wide comprehensive cancer control plan document is attached. (A reproducible, unbound, one-sided, 8½ x 11″ copy of the plan should be attached to this form.)

Glossary

Terms are defined by DCPC in this Glossary to clarify issues for applicants under this RFA only. They are not meant to apply to all DCPC or CDC programs, activities, or RFAs.

Comprehensive Cancer Control: An integrated and coordinated approach to reduce the incidence, morbidity, and mortality [of cancer] through prevention, early detection, treatment, rehabilitation, and palliation.

Comprehensive Cancer Control Plan: Document that is developed as an optimal blueprint for achieving comprehensive cancer control in that State/Tribe/Territory. It should address information on cancer burden; short-and long-term goals and objectives; proposed strategies to meet objectives; assessment of existing and needed resources; and a plan for promoting access to full range of cancer control services.

At a minimum, a Comprehensive Cancer Control Plan: (1) documents an integrated and coordinated state/tribe/territory wide approach to prevention, early detection, treatment, rehabilitation, and palliation of cancer (i.e., not a summation or compilation of categorical risk factor/specific cancer programs); and (2) identifies the priorities to be addressed based on an assessment of the burden of the major detectable/preventable cancers in the State/Tribe/Territory.

Comprehensive Cancer Control Program: Based on goals and objectives established in the comprehensive cancer control plan, the overall set of actions that are conducted with available resources to translate the optimal plan into feasible reality.

Implementation: Conducting activities that are designed to achieve goals and objectives outlined in the Comprehensive Cancer Control Plan. Implementing the Plan is the same thing as conducting comprehensive cancer control activities or programs. For the purposes of programs funded under this RFA, implementation of the plan does not require that all goals and objectives in the State/Tribe/Territory wide comprehensive cancer control plan be implemented; implementation will be guided by the goals and objectives in the implementation plan developed for this RFA.

Indicator: A performance measure used to track critical processes over time to signify progress toward a particular desired outcome of the program. For example, one ''indicator'' for better coordination among categorical programs might be a certain number of meetings held among categorical program staff to assure that efforts are being coordinated. Another ''indicator'' for the same outcome might be that each related program has a representative on the coalition that advises and directs the program.

State/Tribe/Territory wide: Covering the entire State/Tribe/Territory, rather than just limited 34 metropolitan or county areas within the State/Tribe/Territory. For example, State/Tribe/Territory wide comprehensive cancer control plan addresses cancer, programs, activities, and services throughout the State/Tribe/Territory.

U.S. Preventive Services Task Force Guide to Clinical Preventive Services, 2nd ed.: The Guide clearly outlines and establishes, for the clinician, the current state of research on the efficacy of the major preventive interventions. A well-specified methodology based on scientific evidence is used to assess efficacy. Based on the work of a distinguished panel of nationally recognized experts, and reviewed by more than 650 federal and nonfederal experts, it provides recommendations on screening, counseling, and immunizations according to patients' personal characteristics and health risk factors.

Dated: May 7, 1998.

Joseph R. Carter,

Acting Associate Director for Management and Operations, Centers for Disease Control and Prevention (CDC).

[FR Doc. 98–12645 Filed 5–12–98; 8:45 am]

BILLING CODE 4163–18–P

DEPARTMENT OF HEALTH AND HUMAN SERVICES

Centers for Disease Control and Prevention

[Announcement 98037]

Initiatives by Organizations To Strengthen National Tobacco Control Activities in the United States; Notice of Availability of Funds for Fiscal Year 1998; Amendment

A notice announcing the availability of Fiscal Year 1998 funds for cooperative agreements for Initiatives by Organizations to Strengthen National Tobacco Control Activities in the United States was published in the **Federal Register** on April 23, 1998, [63 FR 20197]. The notice is amended as follows:

On page 20202, second column, under the heading ''Application Submission

and Deadline,'' first paragraph on the last line is amended to read: ''* * * on or before June 8, 1998.

All other information and requirements of the April 23, 1998, **Federal Register** notice remain the same.

Dated: May 7, 1998.

Joseph R. Carter,

Acting Associate Director for Management and Operations, Centers for Disease Control and Prevention (CDC).

[FR Doc. 98–12643 Filed 5–12–98; 8:45 am]

BILLING CODE 4163–18–P

DEPARTMENT OF THE INTERIOR

Bureau of Indian Affairs

Amendment to Stockbridge-Munsee Community Band of Mohican Indians Liquor Control Ordinance

AGENCY: Bureau of Indian Affairs, Interior.

ACTION: Notice.

SUMMARY: This Notice is published in accordance with authority delegated by the Secretary of the Interior to the Assistant Secretary—Indian Affairs by 209 DM 8, and in accordance with the Act of August 15, 1953, 67 Stat. 586, 18 U.S.C. 1161. I certify that Resolution numbered 04–98, of the Stockbridge-Munsee Community Band of Mohican Indians was duly adopted by the Stockbridge-Munsee Tribal Council on January 20, 1998. The amendment to the Stockbridge-Munsee Liquor Control Ordinance, published December 11, 1992 at 57 FR 58938, allows licensees to provide complimentary beverages on lands subject to the jurisdiction of the Stockbridge-Munsee Community Band of Mohican Indians.

DATES: This amendment is effective May 13, 1998.

FOR FURTHER INFORMATION CONTACT: Bettie Rushing, Office of Tribal Services, 1849 C Street NW, MS 4641–MIB, Washington, DC 20240–4001; telephone (202) 208–4400.

SUPPLEMENTARY INFORMATION: The amendment to the Stockbridge-Munsee Liquor Control Ordinance, Stockbridge-Munsee Tribal Council resolution numbered 04–98, reads as follows:

Section 3 1.1 (E) 4 which reads ''No licensee may give away or sell alcohol beverages at a loss'' is stricken and eliminated from the Community Liquor Control Ordinance.

Dated: April 30, 1998.

Kevin Gover,

Assistant Secretary—Indian Affairs.

[FR Doc. 98–12654 Filed 5–12–98; 8:45 am]

BILLING CODE 4310–02–P

DEPARTMENT OF THE INTERIOR

Bureau of Land Management

[(CA–067–1210) CACA 035087]

Wilderness Management; Planning Initiation

AGENCY: Bureau of Land Management.

ACTION: Notice.

SUMMARY: The Bureau of Land Management, El Centro Field office, will conduct public open house meetings May 13, 15, and 19, 1998 to gather from the public comments and concerns to be addressed in activity level wilderness management plans. Comments will be solicited primarily for the 10 wilderness areas managed by the El Centro office, but comments regarding any of the 67 wilderness areas managed by the California Desert District will be accepted.

DATES: Open house meetings will be held at the following dates, times, and locations: May 13, 1998: 4:00 pm to 9:00 pm, at the Imperial Irrigation District Auditorium, 1284 Main Street, El Centro, CA; on May 15, 1998: 4:00 pm to 10:00 pm, at the Yuma BLM office, 2555 Gila Ridge Road, Yuma, AZ, and on May 19, 1998: 4:00 pm to 10:00 pm, at the Comfort Inn, 8000 Parkway Drive, La Mesa, CA. For a period of 45 days after publication of this notice in the **Federal Register**, interested parties may submit comments to the Field Manager, Bureau of Land Management, El Centro Field Office, 1661 South 4th Street, El Centro, CA 92243. Objections will be reviewed by the State Director, who may sustain, vacate, or modify this action. In the absence of any objections, this action will be the final determination of the Department of the Interior.

FOR FURTHER INFORNATION CONTACT: Tim Finger, Wilderness Coordinator, at the above address or telephone (760) 337–4442.

Dated: May 6, 1998.

Elayn Briggs,

Acting Field Manager.

[FR Doc. 98–12642 Filed 5–12–98; 8:45 am]

BILLING CODE 4310–40–P

DEPARTMENT OF THE INTERIOR

National Park Service

Environmental Assessment for the Establishment of the World War II Memorial, Washington, D.C.

ACTION: Notice of availability of environmental assessment.

SUMMARY: Pursuant to the Council of Environmental Quality regulations and National Park Service policy, this notice announces the availability of an environmental assessment (EA) for the establishment of the World War II Memorial in Washington, D.C.

DATES: There will be a 30-day public review period for comment on this document. Comments on the EA should be received no later than June 12, 1998.

ADDRESSES: Comments on the EA should be submitted to: Mr. John G. Parsons, Associate Superintendent for Stewardship and Partnerships, National Capital Support Office, National Park Service, 1100 Ohio Drive, S.W., Room 220, Washington, D.C., 20240. Public reading copies of the EQ will be available for review at the following locations: National Capital Region, National Park Service, 1100 Ohio Drive, SW., First Floor Lobby, Washington, D.C., 20242; and American Battle Monuments Commission, 2300 Clarendon Boulevard, Suite 500, Arlington, Virginia, 22201.

FOR FURTHER INFORMATION CONTACT: Mr. John G. Parsons, Associate Superintendent, Stewardship and Partnerships, National Capital Support Office, National Park Service, 1100 Ohio Drive, SW., Room 220, Washington, D.C., 20242, Telephone: (202) 619–7025. A limited number of copies of the EA are available on request.

SUPPLEMENTARY INFORMATION: The EA on this memorial on park land describes the proposed design concept and analyzes pertinent environmental impacts of its establishment and construction and any necessary mitigation measures for the identified impacts.

The World War II Memorial is being established by the American Battle Monuments Commission, an independent agency of the U.S. Government, pursuant to the Commemorative Works Act, 40 U.S.C. 1001 *et seq.* The World War II Memorial was authorized by Public Law 103–32 (May 25, 1993). In Public Law 103–422, Congress authorized its placement within Area I (the area comprising the central Monumental Core of the District of Columbia, as defined in the Act). The memorial will be in West Potomac Park

which is administered by the National Park Service. The actual location is known as the Rainbow Pool site, along 17th Street between the Lincoln Memorial and the Washington Monument.

Along with analyzing the environmental impacts of memorial construction and the completed memorial based on this design concept, this EA also considers how it affects visitor use, vehicular and pedestrian circulation, and existing periodic uses of the site for various activities.

Pursuant to the Commemorative Works Act, one approved, this design concept will be refined to produce a preliminary design and a final memorial design which are subject to additional review by the National Park Service, the National Capital Planning Commission, and the Commission of Fine Arts.

Dated: May 6, 1998.

Joseph Lawer,

Regional Director, National Capital Region.

[FR Doc. 98–12698 Filed 5–12–98; 8:45 am]

BILLING CODE 4310–70–M

DEPARTMENT OF THE INTERIOR

National Park Service

National Register of Historic Places; Notification of Pending Nominations

Nominations for the following properties being considered for listing in the National Register were received by the National Park Service before May 2, 1998. Pursuant to § 60.13 of 36 CFR part 60 written comments concerning the significance of these properties under the National Register criteria for evaluation may be forwarded to the National Register, National Park Service, PO Box 37127, Washington, DC 20013–7127. Written comments should be submitted by May 28, 1998.

Carol D. Shull,

Keeper of the National Register.

ARKANSAS

Bradley County

St. Luke's Catholic Church, 508 W. Pine, Warren, 98000581

Cross County

Giboney—Robertson—Stewart House, 734 Hamilton Ave., Wynne, 98000585

Independence County

National Guard Armory, 380 S. Ninth St., Batesville, 98000579

Jefferson County

Mills House, 715 W. Barraque, Pine Bluff, 98000584

Miller County

Miller County Courthouse, 400 Laurel St., Texarkana, 98000578

Phillips County

Richardson—Turner House, 1469 AR 1 N, Lexa, 98000583

Washington County

Mineral Springs Community Building, Cty Rd. 34, E of West Fork, West Fork vicinity, 98000580

Yell County

First Presbyterian Church—Berry House, 203 Pecan St., Dardanelle, 98000582

COLORADO

Arapahoe County

Little Estate, 1 Littleridge Ln., Cherry Hills Village, 98000610

El Paso County

Cragmor Sanatorium, 1420 Austin Bluffs Pkwy, Colorado Springs, 98000586

FLORIDA

Alachua County

Masonic Temple, 215 N. Main St., Gainesville, 98000589

Citrus County

Crystal River Old City Hall, 532 N. Citrus Ave., Crystal River, 98000588

Manatee County

Midway Subdivision Historic District, 7201 15th St. E, Sarasota vicinity, 98000587

KANSAS

Marion County

Peabody Downtown Historic District, Along Walnut St. between Division and First Sts., Peabody, 98000590

KENTUCKY

Boyle County

Danville National Cemetery (Civil War Era National Cemeteries MPS) 277 N. First St., Danville, 98000591

Pulaski County

Mill Springs National Cemetery (Civil War Era National Cemeteries) 9044 West Hwy 80, Nancy, 98000592

LOUISIANA

St. Tammany Parish

Jay House, Faceing the Tchefuncte R., within Fairview-Riverside State Park, Madisonville vicinity, 98000593

MAINE

York County

Saco Historic District, Roughly bounded by Elm, North, Beach, and Main Sts., Saco, 98000594

MARYLAND

Baltimore Independent City

Northwood Historic District, Loch Raven Blvd., The Almeda, and Cold Spring Ln., Baltimore, 98000596

MASSACHUSETTS

Barnstable County

Hinckley's Corner Historic District, 0, 25, and 40 Way #112, WellFleet, 98000595

MISSOURI

Cooper County

New Lebanon Historic District, MO A, Lebanon, 98000597

NEW JERSEY

Morris County

Ayres' Farm, 25 Cooper Rd., Denville vicinity, 98000598

NEW MEXICO

Bernalillo County

Luna Lodge (Route 66 Through New Mexico MPS) 9019 Central Ave. NE, Albuquerque, 98000600

Tewa Lodge (Route 66 Through New Mexico MPS) 5715 Central Ave. NE, Albuquerque, 98000599

OHIO

Lucas County

Englewood Historic District, Roughly bounded by W. Bancroft, Lawrence, Oakwood, Hoag, and Detroit Sts., Toledo, 98000601

OREGON

Curry County

Port Orford Coast Guard Station, 92331 Coast Guard Hill Rd., Port Orford, 98000606

Deschutes County

Liberty Theater, 849 NW Wall St., Bend, 98000608

Putnam, George Palmer and Doroathy Binney House, 606 NW Congress St., Bend, 98000607

Gilliam County

Condon Commercial Historic District, Roughly bounded by Ward, Spring, and Oregon Sts., and mid-block between Walnut and Frazier Sts., Condon, 98000609

Hood River County

Hood River County Library and Georgiana Smith Park, 502 State St., Hood River, 98000605

Linn County

Perry, E.C., Buidling, 38731 N. Main St., Scio, 98000604

TEXAS

Lubbock County

Holden Properties Historic District, 3103, 3105, 3105A, 3105B, 3107, 3109, and 3111 20th St., Lubbock, 98000602

VIRGINIA

Mecklenburg County

Buffalo Springs Historical Archeological District, Address Restricted, Buffalo Junction, 98000603

A Request for Removal is hereby made for the following properties:

OREGON

Clatsop County

Herschell, Allan, Two-Abreast Carousel (Oregon Historic Wooden Carousels TR) 300 Broadway Seaside, 87001382

Multnomah County

Looff, Charles, 20-Sweep Menagerie Carousel (Oregon Historic Wooden Carousels TR) Hollady St. and NE Eighth Ave., Portland, 87001379

[FR Doc. 98–12647 Filed 5–12–98; 8:45 am]

BILLING CODE 4310–70–U

DEPARTMENT OF THE INTERIOR

National Park Service

Notice of Inventory Completion for Native American Human Remains from Gooseberry Valley, Utah in the Control of the Fishlake National Forest, USDA Forest Service, Richfield, UT

AGENCY: National Park Service, Interior

ACTION: Notice.

Notice is hereby given in accordance with provisions of the Native American Graves Protection and Repatriation Act (NAGPRA), 43 CFR 10.9, of the completion of an inventory of human remains from Gooseberry Valley, Utah in the control of the Fishlake National Forest, USDA Forest Service, Richfield, UT.

A detailed assessment of the human remains was made by University of Utah Museum of Natural History, University of Utah Department of Anthropology, and USDA Forest Service professional staff in consultation with representatives of the Duckwater Shoshone Tribe, Fort McDermitt Paiute and Shoshone Tribes, Hopi Tribe, Kaibab Band of Paiute Indians, Navajo Nation, Northwestern Band of Shoshoni Nation, Paiute Indian Tribe of Utah, Pueblo of Acoma, Pueblo of Pojoaque, Pueblo of San Felipe, Pueblo of San Ildefonso, Pueblo of Sandia, Pueblo of Santa Ana, Pueblo of Santa Clara, Pueblo of Santo Domingo, Pueblo of Zia, Pueblo of Zuni, Shoshone-Bannock Tribes of the Fort Hall Reservation, Shoshone-Paiute Tribes of the Duck Valley Reservation, Skull Valley Band of Goshute Indians, Southern Paiute Consortium (on behalf of the Kaibab Paiute Band, Cedar City Paiute Band, Indian Peak Paiute Band, Kanosh Paiute Band, Koosharem Paiute Band, Las Vegas Paiute Band, Moapa Paiute Band, and Shivwits Paiute Band), Southern Ute Indian Tribe, Summit Lake Paiute Tribe, Ute Mountain Ute Tribe, Ute Tribe of the Unitah and Ouray Reserveration, and the Yomba Shoshone Tribe.

During the 1980s, human remains representing one individual were recovered from Warezit House (42SV 1060) in the Fishlake National Forest during legally authorized excavations conducted by University of Utah Department of Anthropology and currently curated at the Utah Museum of Natural History. No known individual was identified. No associated funerary objects are present.

Based on material culture of the site, the Warezit House site has been identified as a Fremont occupation dating between 780–1260 A.D. Based on the context of the burial, this individual as been identified as Native American. On review of the available evidence concerning Fremont culture and settlement of this area, continuities of agriculture, basketry, and ceramics indicate affiliation between the Fremont of this area and later puebloan groups. Additionally, continuities of ceramics and projectile point chronologies also indicate cultural affiliation between the Fremont of this area and the historic Numic-speaking groups identified in the area during the contact period. Consultation evidence provided by representatives of the Hopi Tribe, the Paiute Tribe of Utah, the Pueblo of Zuni, and the Ute Tribe of the Unitah and Ouray Reservation have presented data from oral traditions that indicate ancestral groups and/or specific clans or lineages from their cultures inhabited portions of the area associated with the Fremont from the very earliest times onward.

Based on the above mentioned information, officials of the USDA Forest Service have determined that, pursuant to 43 CFR 10.2 (d)(1), the human remains listed above represent the physical remains of one individual of Native American ancestry. While not clearly culturally affiliated, officials of the USDA National Forest Service have further determined that, pursuant to 25 U.S.C. 3003 (d)(2)(C), there is a reasonable belief of shared group identity given the totality of the circumstances surrounding the acquisition of these Native American human remains with the Hopi Tribe, the Paiute Tribe of Utah, the Pueblo of Zuni, and the Ute Tribe of the Unitah and Ouray Reservation.

This notice has been sent to officials of the Duckwater Shoshone Tribe, Fort McDermitt Paiute and Shoshone Tribes, Hopi Tribe, Kaibab Band of Paiute Indians, Navajo Nation, Northwestern Band of Shoshoni Nation, Paiute Indian Tribe of Utah, Pueblo of Acoma, Pueblo of Pojoaque, Pueblo of San Felipe, Pueblo of San Ildefonso, Pueblo of Sandia, Pueblo of Santa Ana, Pueblo of Santa Clara, Pueblo of Santo Domingo, Pueblo of Zia, Pueblo of Zuni, Shoshone-Bannock Tribes of the Fort Hall Reservation, Shoshone-Paiute Tribes of the Duck Valley Reservation, Skull Valley Band of Goshute Indians, Southern Paiute Consortium (on behalf of the the Kaibab Paiute Band, Cedar City Paiute Band, Indian Peak Paiute Band, Kanosh Paiute Band, Koosharem Paiute Band, Las Vegas Paiute Band, Moapa Paiute Band, and Shivwits Paiute Band), Southern Ute Indian Tribe, Summit Lake Paiute Tribe, Ute Mountain Ute Tribe, Ute Tribe of the Unitah and Ouray Reserveration, Yomba Shoshone Tribe. Representatives of any other Indian tribe that believes itself to be culturally affiliated with these human remains should contact Robert Leonard, Forest Archeologist, Fishlake National Forest, 115 East 900 North, Richfield, UT 84602–3600; telephone: (801) 896–9233, before June 12, 1998. Repatriation of the human remains to the Hopi Tribe, the Paiute Tribe of Utah, the Pueblo of Zuni, and the Ute Tribe of the Unitah and Ouray Reservation may begin after that date if no additional claimants come forward.

The National Park Service is not responsible for the determinations within this notice.

Dated: May 7, 1998.

Francis P. McManamon,

Departmental Consulting Archeologist, Manager, Archeology and Ethnography Program.

[FR Doc. 98–12648 Filed 5–12–98; 8:45 am]

BILLING CODE 4310–70–F

DEPARTMENT OF THE INTERIOR

Bureau of Reclamation

Trinity River Basin Fish and Wildlife Task Force: Public Meeting

AGENCY: Bureau of Reclamation (Reclamation), Interior.

ACTION: Notice of public meeting.

SUMMARY: In accordance with Section 10(a)(2) of the Federal Advisory Committee Act (Pub. L. 92–463), announcement is made of a meeting of the Trinity River Basin Fish and Wildlife Task Force.

DATES: The meeting will be held on Tuesday, June 30, 1998, at 1 to 4 p.m.

ADDRESSES: The meeting will be at the: Federal Building, Bureau of Reclamation, 2800 Cottage Way, Conference Room E–2901, Sacramento, California 95825, Telephone: 916/978–5113.

FOR FURTHER INFORMATION CONTACT: Mr. Russell P. Smith, Chief, Environmental

and Natural Resource Division, Northern California Area Office, 16349 Shasta Dam Boulevard, Shasta Lake, California, 96019. Telephone: 530/275–1554.

SUPPLEMENTARY INFORMATION: Task Force members will approve the Three-Year Action Plan for FY 1999; will comment on reauthorization of the Trinity River Basin Fish and Wildlife Management Program; and, will discuss renewal of the Charter under the Federal Advisory Committee Act. Task Force members will be briefed on the Trinity River Flow Evaluation and Trinity River Mainstem Fishery Restoration Environmental Impact Statement/Report.

The meeting of the Task Force is open to the public. Any member of the public may file a written statement with the Task Force in person or by mail before, during, or after the meeting. To the extent that time permits, the Task Force Chairman may allow public presentation of oral statements at the meeting.

Dated: May 5, 1998.

Roger K. Patterson,

Regional Director.

[FR Doc. 98–12655 Filed 5–12–98; 8:45 am]

BILLING CODE 4310–09–U

INTERNATIONAL TRADE COMMISSION

[Investigation No. 332–352]

Andean Trade Preference Act: Effect on the U.S. Economy and on Andean Drug Crop Eradication

AGENCY: International Trade Commission.

ACTION: Notice of opportunity to submit comments in connection with 1997 annual report.

EFFECTIVE DATE: May 5, 1998.

FOR FURTHER INFORMATION CONTACT: Joanne Guth (202–205–3264), Country and Regional Analysis Division, Office of Economics, U.S. International Trade Commission, Washington, DC 20436.

BACKGROUND: Section 206 of the Andean Trade Preference Act (ATPA) (19 U.S.C. 3204) requires that the Commission submit annual reports to the Congress regarding:

(1) The actual economic effect of ATPA on the U.S. economy generally as well as on specific industries which produce articles that are like, or directly competitive with, articles being imported under the Act;

(2) The probable future effect of ATPA on the U.S. economy generally and on industries affected by the Act; and

(3) The estimated effect of ATPA on drug-related crop eradication and crop substitution efforts of beneficiary countries.

In addition, in this year's report the Commission plans to examine the effectiveness of ATPA in promoting export-oriented growth and diversification of production in the beneficiary countries. Notice of institution of the investigation and the schedule for such reports was published in the **Federal Register** of March 10, 1994 (59 FR 11308). The Commission's fifth annual report on ATPA, covering calendar year 1997, is to be submitted by September 30, 1998.

Written Submissions

The Commission does not plan to hold a public hearing in connection with the preparation of the fifth annual report. However, interested persons are invited to submit written statements concerning the matters to be addressed in the report. Commercial or financial information that a party desires the Commission to treat as confidential must be submitted on separate sheets of paper, each clearly marked ''Confidential Business Information'' at the top. All submissions requesting confidential treatment must conform with the requirements of section 201 of the Commission's Rules of Practice and Procedure (19 CFR 201.6). All written submissions, except for confidential business information, will be made available for inspection by interested persons in the Office of the Secretary to the Commission. To be assured of consideration by the Commission, written statements relating to the Commission's report should be submitted at the earliest practical date and should be received no later than June 30, 1998.

Address all submissions to Office of the Secretary, U.S. International Trade Commission, 500 E Street, SW, Washington, DC 20436. Hearing-impaired persons are advised that information on this matter can be obtained by contacting the Commission's TDD terminal on (202) 205–1810. General information concerning the Commission may also be obtained by accessing its Internet server (http://www.usitc.gov).

Issued: May 7, 1998.

By order of the Commission.

Donna R. Koehnke,

Secretary.

[FR Doc. 98–12682 Filed 5–12–98; 8:45 am]

BILLING CODE 7020–02–P

INTERNATIONAL TRADE COMMISSION

[Investigation No. 332–227]

Annual Report on the Impact of the Caribbean Basin Economic Recovery Act on U.S. Industries and Consumers

AGENCY: United States International Trade Commission.

ACTION: Notice of opportunity to submit comments in connection with 1997 annual report.

EFFECTIVE DATE: May 5, 1998.

FOR FURTHER INFORMATION CONTACT: Joanne Guth (202–205–3264), Country and Regional Analysis Division, Office of Economics, U.S. International Trade Commission, Washington, D.C. 20436.

BACKGROUND: Section 215(a) of the Caribbean Basin Economic Recovery Act (CBERA) (19 U.S.C. 2704(a)) requires that the Commission submit annual reports to the Congress and the President regarding:

(1) The actual economic effect of CBERA on the U.S. economy generally as well as on specific industries which produce articles that are like, or directly competitive with, articles being imported under the Act; and

(2) The probable future effect of CBERA on the U.S. economy generally and on industries affected by the Act.

In addition, in this year's report the Commission plans to examine the effectiveness of CBERA in promoting export-oriented growth and diversification of production in the beneficiary countries. Notice of institution of the investigation and the schedule for such reports was published in the **Federal Register** of May 14, 1986 (51 FR 17678). The thirteenth report, covering calendar year 1997, is to be submitted by September 30, 1998.

Written Submissions

The Commission does not plan to hold a public hearing in connection with the thirteenth annual report. However, interested persons are invited to submit written statements concerning the matters to be addressed in the report. Commercial or financial information that a party desires the Commission to treat as confidential must be submitted on separate sheets of paper, each clearly marked ''Confidential Business Information'' at the top. All submissions requesting confidential treatment must conform with the requirements of section 201.6 of the Commission's Rules of Practice and Procedure (19 CFR 201.6). All written submissions, except for confidential business information, will

be made available for inspection by interested persons in the Office of the Secretary to the Commission. To be assured of consideration by the Commission, written statements relating to the Commission's report should be submitted at the earliest practical date and should be received no later than June 30, 1998.

Address all submissions to the Secretary to the Commission, U.S. International Trade Commission, 500 E Street, S.W., Washington, D.C. 20436. Hearing-impaired persons are advised that information on this matter can be obtained by contacting the Commission's TDD terminal on (202) 205–1810. General information concerning the Commission may also be obtained by accessing its Internet server (http://www.usitc.gov).

Issued: May 7, 1998.

By order of the Commission.

Donna R. Koehnke,

Secretary.

[FR Doc. 98–12683 Filed 5–12–98; 8:45 am]

BILLING CODE 7020–02–P

INTERNATIONAL TRADE COMMISSION

[Investigation No. 337–TA–409]

Certain CD-ROM Controllers and Products Containing Same-II; Investigation

AGENCY: International Trade Commission.

ACTION: Institution of investigation pursuant to 19 U.S.C. 1337.

SUMMARY: Notice is hereby given that a complaint was filed with the U.S. International Trade Commission on April 7, 1998, under section 337 of the Tariff Act of 1930, as amended, 19 U.S.C. 1337, on behalf of Oak Technology, Inc., 139 Kifer Court, Sunnyvale, California 94086. On April 20 and April 24, 1998, Oak filed supplements to its complaint. The complaint, as supplemented, alleges violations of section 337 in the importation into the United States, the sale for importation, and the sale within the United States after importation of certain CD-ROM controllers and products containing same by reason of infringement of claims 1–5 and 8–10 of U.S. Letters Patent 5,581,715. The complaint further alleges that there exists an industry in the United States as required by subsection (a)(2) of section 337.

The complainant requests that the Commission institute an investigation and, after the investigation, issue a permanent exclusion order and a permanent cease and desist order.

ADDRESSES: The complaint, except for any confidential information contained therein, is available for inspection during official business hours (8:45 a.m. to 5:15 p.m.) in the Office of the Secretary, U.S. International Trade Commission, 500 E Street, SW., Room 112, Washington, D.C. 20436, telephone 202–205–2000. Hearing-impaired individuals are advised that information on this matter can be obtained by contacting the Commission's TDD terminal on 202–205–1810. Persons with mobility impairments who will need special assistance in gaining access to the Commission should contact the Office of the Secretary at 202–205–2000. General information concerning the Commission may also be obtained by accessing its internet server (http://www.usitc.gov).

FOR FURTHER INFORMATION CONTACT: Thomas L. Jarvis, Esq., Office of Unfair Import Investigations, U.S. International Trade Commission, telephone 202–205–2568.

Authority: The authority for institution of this investigation is contained in section 337 of the Tariff Act of 1930, as amended, and in 210.10 of the Commission's rules of practice and procedure, 19 CFR 210.10 (1997).

SCOPE OF INVESTIGATION: Having considered the complaint, the U.S. International Trade Commission, on May 7, 1998, ordered that—

(1) Pursuant to subsection (b) of section 337 of the Tariff Act of 1930, as amended, an investigation be instituted to determine whether there is a violation of subsection (a)(1)(B) of section 337 in the importation into the United States, the sale for importation, or the sale within the United States after importation of certain CD-ROM controllers or products containing same by reason of infringement of claims 1, 2, 3, 4, 5, 8, 9, or 10 of U.S. Letters Patent 5,581,715, and whether there exists an industry in the United States as required by subsection (a)(2) of section 337.

(2) For the purpose of the investigation so instituted, the following are hereby named as parties upon which this notice of investigation shall be served:

(a) The complainant is—Oak Technology, Inc., 139 Kifer Court, Sunnyvale, CA 94086.

(b) The respondents are the following companies alleged to be in violation of section 337, and are the parties upon which the complaint is to be served:

MediaTek, Inc., No. 13 Innovation Road I, Science-Based Industrial Park, Hsinchu, Taiwan

United Microelectronics Corporation, No. 3, Li-Hsin Road II, Science-Based Industrial Park, Hsinchu, Taiwan

Lite-On Technology Corp., 5F, 16, Sec. 4, Nanking E. Rd., Taipei, Taiwan

AOpen, Inc., 6F, #88, Sec. 1, Hsin Tai Wu Rd., Hsichih, Taipei Hsien, Taiwan 221

(c) Thomas L. Jarvis, Esq., Office of Unfair Import Investigations, U.S. International Trade Commission, 500 E Street, SW., Room 401–J, Washington, D.C. 20436, who shall be the Commission investigative attorney, party to this investigation; and

(3) For the investigation so instituted, the Honorable Sidney Harris is designated as the presiding administrative law judge.

Responses to the complaint and the notice of investigation must be submitted by the named respondents in accordance with § 210.13 of the Commission's rules of practice and procedure, 19 CFR 210.13. Pursuant to 19 CFR 201.16(d) and 210.13(a), such responses will be considered by the Commission if received not later than 20 days after the date of service by the Commission of the complaint and the notice of investigation. Extensions of time for submitting responses to the complaint will not be granted unless good cause therefor is shown.

Failure of a respondent to file a timely response to each allegation in the complaint and in this notice may be deemed to constitute a waiver of the right to appear and contest the allegations of the complaint and this notice, and to authorize the administrative law judge and the Commission, without further notice to the respondent, to find the facts to be as alleged in the complaint and this notice and to enter both an initial determination and a final determination containing such findings, and may result in the issuance of a limited exclusion order or a cease and desist order or both directed against such respondent.

Issued: May 7, 1998.

By order of the Commission.

Donna R. Koehnke,

Secretary.

[FR Doc. 98–12676 Filed 5–12–98; 8:45 am]

BILLING CODE 7020–02–P

INTERNATIONAL TRADE COMMISSION

[Investigation No. 337–TA–401]

Certain CD-ROM Controllers and Products Containing Same; Notice of a Commission Determination Not To Review an Initial Determination Terminating the Investigation on the Basis of a Settlement Agreement and Withdrawal of the Complaint

AGENCY: U.S. International Trade Commission.

ACTION: Notice.

SUMMARY: Notice is hereby given that the U.S. International Trade Commission has determined not to review the presiding administrative law judge's (''ALJ's'') initial determination (''ID'') granting a joint motion to terminate the above-captioned investigation on the basis of a settlement agreement and withdrawal of the complaint.

FOR FURTHER INFORMATION CONTACT: Carl P. Bretscher, Esq., Office of the General Counsel, U.S. International Trade Commission, telephone (202) 205–3107.

SUPPLEMENTARY INFORMATION: The Commission instituted this investigation on August 20, 1997, based on a complaint filed by Oak Technology, Inc. (''Oak Technology''). Oak Technology alleged that respondents Winbond Electronics Corp. (''WEC''), Winbond Electronic North America Corp., Wearnes Technology (Private) Ltd., Wearnes Electronics Malaysia Snd. Bhd., and Wearnes Peripheral International (Pte.) Ltd. (collectively ''respondents'') violated section 337 of the Tariff Act of 1930, as amended, 19 U.S.C. 1337, by importing, selling for importation, or selling within the United States after importation certain CD-ROM controllers and products containing same that infringe certain claims of Oak Technology's U.S. Letters Patent 5,535,327 and U.S. Letters Patent 5,581,715.

On March 18, 1998, Oak Technology and respondents filed a joint motion to terminate the investigation based on a settlement agreement between Oak Technology and WEC and Oak Technology's agreement to withdraw its complaint against the other respondents.

On March 30, 1998, the Commission investigative attorney (''IA'') moved to make public certain additional portions of the settlement agreement. The motion was unopposed.

On April 15, 1998, the ALJ issued an ID (Order No. 9) terminating the investigation on the basis of the settlement agreement and withdrawal of the complaint. The ALJ also granted the IA's motion to make public certain additional portions of the settlement agreement. The ALJ found no indication that termination of the investigation on the basis of the settlement agreement would adversely impact the public interest. No party filed a petition to review the subject ID.

This action is taken under the authority of section 337 of the Tariff Act of 1930, as amended, 19 U.S.C. 1337, and Commission rule 210.21, 19 CFR 210.21. Copies of the ALJ's ID and all other nonconfidential documents filed in connection with this investigation are or will be available for inspection during official business hours (8:45 a.m. to 5:15 p.m.) in the Office of the Secretary, U.S. International Trade Commission, 500 E Street, S.W., Washington, D.C. 20436, telephone 202–205–2000. Hearing-impaired persons are advised that information on this matter can be obtained by contacting the Commission's TDD terminal on 202–205–1810. General information concerning the Commission may also be obtained by accessing its Internet server (http://www.usitc.gov).

Issued: May 8, 1998.

By order of the Commission.

Donna R. Koehnke,

Secretary.

[FR Doc. 98–12700 Filed 5–12–98; 8:45 am]

BILLING CODE 7020–02–P

INTERNATIONAL TRADE COMMISSION

[Investigation No. 337–TA–410]

Certain Coated Optical Waveguide Fibers and Products Containing Same; Investigation

AGENCY: U.S. International Trade Commission.

ACTION: Institution of investigation pursuant to 19 U.S.C. 1337.

SUMMARY: Notice is hereby given that a complaint was filed with the U.S. International Trade Commission on April 9, 1998, under section 337 of the Tariff Act of 1930, as amended, 19 U.S.C. 1337, on behalf of Corning, Inc., 1 Riverfront Plaza, Corning, NY 14831. Supplements to the complaint were filed on April 28, 1998, and May 6, 1998. The complaint, as supplemented, alleges violations of section 337 in the importation into the United States, the sale for importation, and the sale within the United States after importation of certain coated optical waveguide fibers, and products containing same, made by a process that infringes claim 1 of U.S. Letters Patent 4,792,347. The complaint further alleges that there exists an industry in the United States as required by subsection (a)(2) of section 337.

The complainant requests that the Commission institute an investigation and, after the investigation, issue a permanent limited exclusion order and a permanent cease and desist order.

ADDRESSES: The complaint, except for any confidential information contained therein, is available for inspection during official business hours (8:45 a.m. to 5:15 p.m.) in the Office of the Secretary, U.S. International Trade Commission, 500 E Street, SW., Room 112, Washington, DC 20436, telephone 202–205–2000. Hearing-impaired individuals are advised that information on this matter can be obtained by contacting the Commission's TDD terminal on 202–205–1810. Persons with mobility impairments who will need special assistance in gaining access to the Commission should contact the Office of the Secretary at 202–205–2000. General information concerning the Commission may also be obtained by accessing its Internet server (http://www.usitc.gov).

FOR FURTHER INFORMATION CONTACT: Jeffrey R. Whieldon, Esq., Office of Unfair Import Investigations, U.S. International Trade Commission, telephone 202–205–2580.

Authority: The authority for institution of this investigation is contained in section 337 of the Tariff Act of 1930, as amended, and in § 210.10 of the Commission's rules of practice and procedure, 19 CFR 210.10 (1997).

SCOPE OF INVESTIGATION: Having considered the complaint, the U.S. International Trade Commission, on May 7, 1998, ordered that—

(1) Pursuant to subsection (b) of section 337 of the Tariff Act of 1930, as amended, an investigation be instituted to determine whether there is a violation of subsection (a)(1)(B) of section 337 in the importation into the United States, the sale for importation, or the sale within the United States after importation of certain coated optical waveguide fibers, or products containing same, made by a process that infringes claim 1 of U.S. Letters Patent 4,792,347, and whether there exists an industry in the United States as required by subsection (a)(2) of section 337.

(2) For the purpose of the investigation so instituted, the following are hereby named as parties upon which this notice of investigation shall be served:

(a) The complainant is—Corning Incorporated, 1 Riverfront Plaza, Corning, NY 14831.

(b) The respondents are the following companies alleged to be in violation of section 337, and are the parties upon which the complaint is to be served:

Plasma Optical Fibre, B.V., Zwaanstraat 1, 5651 CA Eindhoven, The Netherlands

Chromatic Technologies, Inc., 9 Forge Park, Franklin, MA 02038

(c) Jeffrey R. Whieldon, Esq., Office of Unfair Import Investigations, U.S. International Trade Commission, 500 E Street, SW, Room 401–H, Washington, DC 20436, who shall be the Commission investigative attorney, party to this investigation; and

(3) For the investigation so instituted, the Honorable Paul J. Luckern is designated as the presiding administrative law judge.

Responses to the complaint and the notice of investigation must be submitted by the named respondents in accordance with § 210.13 of the Commission's rules of practice and procedure, 19 CFR 210.13. Pursuant to 19 CFR 201.16(d) and 210.13(a), such responses will be considered by the Commission if received no later than 20 days after the date of service by the Commission of the complaint and notice of investigation. Extensions of time for submitting responses to the complaint will not be granted unless good cause therefor is shown.

Failure of a respondent to file a timely response to each allegation in the complaint and in this notice may be deemed to constitute a waiver of the right to appear and contest the allegations of the complaint and this notice, and to authorize the administrative law judge and the Commission, without further notice to the respondent, to find the facts to be as alleged in the complaint and this notice and to enter both an initial determination and a final determination containing such findings, and may result in the issuance of a limited exclusion order or a cease and desist order or both directed against such respondent.

Issued: May 8, 1998

By order of the Commission.

Donna R. Koehnke,

Secretary.

[FR Doc. 98–12681 Filed 5–12–98; 8:45 am]

BILLING CODE 7020–02–P

DEPARTMENT OF JUSTICE

Notice of Lodging of Consent Decree Pursuant to the Comprehensive Environmental Response, Compensation, and Liability Act

Notice is hereby given that a proposed consent decree in *United States* v. *American Recovery Company, et al.,* Civil Action No. 95–1590, was lodged on April 22, 1998 with the United States District Court for the Western District of Pennsylvania. The United States filed this action pursuant to the Comprehensive Environmental Response, Compensation and Liability Act (''CERCLA'') to recover past and future response costs incurred at or in connection with the Municipal and Industrial Disposal Company Site. The Consent Decree requires defendant Neville Chemical Company to pay $100,000 (plus interest) to reimburse a portion of the United States' past costs associated with the investigation and clean up of the Municipal & Industrial Disposal Company Superfund Site (''Site''), located in Elizabeth Township, Pennsylvania.

The Department of Justice will receive, for a period of thirty (30) days from the date of this publication, comments relating to the proposed consent decree. Comments should be addressed to the Assistant Attorney General for the Environment and Natural Resources Division, Department of Justice, Washington, D.C. 20530, and should refer to *United States* v. *American Recovery Company, et al.,* DO Ref. #90–11–2–949.

The proposed consent decree may be examined at the office of the United States Attorney, 633 Post Office & Courthouse, 7th & Grant Streets, Pittsburgh, PA 15219; the Region III Office of the Environmental Protection Agency, 841 Chestnut Building, Philadelphia, Pennsylvania 19107; and at the Consent Decree Library, 1120 G Street, N.W., 4th Floor, Washington, D.C. 20005, (202) 624–0892. A copy of the proposed consent decree may be obtained in person or by mail from the Consent Decree Library, 1120 G Street, N.W., 4th Floor, Washington, D.C. 20005. In requesting a copy please refer to the referenced case and enclose a check in the amount of $4.75 (25 cents per page reproduction costs) for each decree, payable to the Consent Decree Library.

Joel M. Gross,

Chief, Environmental Enforcement Section, Environment and Natural Resources Division.

[FR Doc. 98–12629 Filed 5–12–98; 8:45 am]

BILLING CODE 4410–15–M

DEPARTMENT OF JUSTICE

Notice of Lodging of Consent Decree Pursuant to the Clean Water Act

In accordance with Departmental Policy, 28 C.F.R. § 50.7, notice is hereby given that a consent decree in *Clark Fork Pend Oreille Coalition, et al. vs. Idaho Transportation Department, et al.,* Civil No. 95–0300–N–EJL (D. Idaho), was lodged with the United States District Court for the District of Idaho on April 15, 1998. The proposed consent decree concerns violations of section 401 of the Clean Water Act, 33 U.S.C. §§ 1342 and 1344(a), involving the discharge of dredged or fill materials into the Sand Creek, its tributaries and adjacent ponds and wetlands by the Idaho Department of Transportation (''DOT'') during 1994 road construction on U.S. Highway 95 in Bonner County, Idaho.

The Consent Decree includes the following terms: (1) Restoration of environmental harm; (2) an admission that ITD violated the CWA; (3) a penalty of $200,00 to be deposited into a trust account entitled ''Clark Fork Pend Oreille Wetlands Trust Fund,'' to protect, preserve, improve or enhance wetlands in Bonner County within the natural drainage to Pend Oreille Lake and Clark Fork River; (4) develop a program to educate ITD personnel about the requirements of the CWA; (5) establish an environmental inspector position for each major highway construction project to coordinate all CWA permitting issues for ITD projects; and, (6) adopt new contract procedures providing standards for erosion control, wetlands identification and the incorporation of Section 404 Permits into all construction contracts. The Army Corps of Engineers' headquarters, and the Corps Walla Walla, Washington District, as well as the United States Attorney's Office for the District of Idaho, support the settlement.

The Department of Justice will receive written comments relating to the Consent Decree for a period of thirty (30) days from the date of this notice. Comments should be addressed to the Assistant Attorney General, United States Department of Justice, Attention: Deborah A. Hill, Assistant United States Attorney, District of Idaho, P.O. Box 32, Boise, ID 83707, and should refer to *Clark Fork Pend Oreille Coalition, et al. vs. Idaho Transportation Department, et al.,* U.S. Attorney, No. reference N–95–0096.

The Consent Decree may be examined at the following offices:

Office of the United States Attorney, District of Idaho, 877 W. Main Street, Suite 201, Boise, Idaho 83702

Office of District Counsel, Corps of Engineers, Walla Walla District, 201 N. 3rd Avenue, Walla Walla, WA 99362–1876.

A copy may be requested by calling Deborah A. Hill, Assistant United States Attorney, at (208) 334–1211. In requesting a copy, please enclose a check payable to the Treasury of the United States in the amount of $6.00 for a copy of the Consent Decree with attachments and postage.

Deborah A. Hill,

Assistant U.S. Attorney, District of Idaho.

[FR Doc. 98–12627 Filed 5–12–98; 8:45 am]

BILLING CODE 4410–15–M

DEPARTMENT OF JUSTICE

Notice of Lodging of Consent Decree Pursuant to the Comprehensive Environmental Response, Compensation, and Liability Act of 1980 (''CERCLA'')

Notice is hereby given that on April 21, 1998, a proposed Consent Decree was lodged with the United States District Court for the Northern District of Iowa in *United States* v. *Foxley Cattle Co., et al.*, Civil Action No. C98–4032 DEO, (N.D. Iowa). The proposed Consent Decree settles claims asserted by the United States at the request of the United States Environmental Protection Agency (''EPA'') under Section 107(a) of the Comprehensive Environmental Response, Compensation, and Liability Act of 1980 (''CERCLA''), 42 U.S.C. 9607(a), in a complaint filed concurrently with the lodging of the proposed Consent Decree. The complaint seeks reimbursement of response costs incurred and to be incurred by the United States in response to the release or threatened release of hazardous substances at the Mid-America Tanning Company Superfund Site, located in Woodbury County, Iowa.

Under the proposed Consent Decree, defendant Foxley Cattle Company shall, *inter alia*, reimburse the EPA Hazardous Substance Superfund $642,000, plus interest, shall pay $100,000 for payment of Natural Resource Damages to the United States, and shall conduct and perform groundwater sampling and analysis at the Site in accordance with an EPA approved plan. Defendant Andrew M. Hain shall, *inter alia*, reimburse the EPA Hazardous Substance Superfund $100,000. In exchange, and conditioned upon the complete and satisfactory performance of their obligations under the proposed Consent Decree, the settling defendants shall receive a covenant not to sue pursuant to Sections 106 and 107(a) of CERCLA, 42 U.S.C. 9606 and 9607(a), and Section 7003 of RCRA, 42 U.S.C. 6973, to undertake response actions or to recover response costs at or in connection with the Site. Foxley also shall receive a covenant not to sue pursuant to Section 107(a) of CERCLA, 42 U.S.C. 9607(a), for Natural Resource Damages related to the Site. In addition, the settling defendants receive contribution protection under Section 113(f)(2), 42 U.S.C. 9613(f)(2), for matters addressed in the proposed Consent Decree. The United States reserves the right to pursue the settling defendants in certain circumstances if previously unknown conditions or information indicates that response action performed at the Site is not protective of human health or the environment.

The Department of Justice will receive written comments relating to the proposed Consent Decree for thirty (30) days from the date of publication of this notice. Comments should be addressed to the Assistant Attorney General of the Environment and Natural Resources Division, U.S. Department of Justice, Washington, D.C. 20503, and should refer to *United States* v. *Foxley Cattle Co., et al.*, DOJ #90–11–2–1185A. The proposed Consent Decree may be examined at the EPA Region 7 Office at 726 Minnesota Ave., Kansas City, KS 66101. A copy of the proposed Consent Decree may be obtained in person or by mail from the Consent Decree Library, 1120 G Street, N.W., 4th Floor, Washington, D.C. 20005 (202) 624–0892. In requesting a copy, please enclose a check in the amount of $10.50 (25 cents per page) payable to the ''Consent Decree Library''.

Joel Gross,

Chief, Environmental Enforcement Section, Environment and Natural Resources Division.

[FR Doc. 98–12628 Filed 5–12–98; 8:45 am]

BILLING CODE 4410–15–M

DEPARTMENT OF JUSTICE

Notice of Lodging of Consent Decree Pursuant to the Clean Water Act

Notice is hereby given that on April 17, 1998, a proposed Consent Decree was lodged with the United States District Court for the District of Kansas in *United States* v. *Texaco Pipeline, Inc., et al.*, Civ. No. 96–2152–GTV (D. Kan.). The proposed Consent Decree settles claims asserted by the United States at the request of the United States Environmental Protection Agency (''EPA'') in an action originally filed on April 1, 1996. The United States filed this action pursuant to the Federal Water Pollution Control Act, commonly referred to as the Clean Water Act (''CWA'' or ''Act''), 33 U.S.C. §§ 1251 *et seq*. The complaint requested the assessment of civil penalties and injunctive relief against defendants Texaco Pipeline, Inc. (''Texaco Pipeline'') and Texaco Trading and Transportation, Inc. (''Texaco Trading'') for discharges of oil into navigable waters of the United States or adjoining shorelines in violation of Sections 301 and 311 of the CWA, 33 U.S.C. 1311 and 1321. These discharges took place from the defendants' pipeline systems in the State of Kansas.

Under the proposed Consent Decree, the defendants' collectively will pay to the United States a $925,000 civil penalty. In addition, Texaco Trading shall purge and permanently remove from service specified portions of its pipeline system. The defendants also shall undertake additional injunctive relief which includes the lowering of pipeline, improved maintenance of pipeline, and inspection of pipeline within the State of Kansas.

The Department of Justice will receive written comments relating to the proposed Consent Decree for thirty (30) days from the date of publication of this notice. Comments should be addressed to the Assistant Attorney General of the Environment and Natural Resources Division, U.S. Department of Justice, Washington, D.C. 20530, and should refer to *United States* v. *Texaco Pipeline Inc., et al.*, DOJ #90–5–1–1–4272. The proposed Consent Decree may be examined at the EPA Region 7 Office at 726 Minnesota Ave., Kansas City, KS 66101. A copy of the proposed Consent Decree may be obtained in person or by mail from the Consent Decree Library, 1120 G Street, N.W., 4th Floor, Washington, D.C. 20005 (202) 624–0892. In requesting a copy, please enclose a check in the amount of $8.00 (25 cents per page) payable to the ''Consent Decree Library''.

Joel Gross,

Chief, Environmental Enforcement Section, Environment and Natural Resources Division.

[FR Doc. 98–12630 Filed 5–12–98; 8:45 am]

BILLING CODE 4410–15–M

DEPARTMENT OF JUSTICE

Office of Justice Programs

Agency Information Collection Activities: Proposed Collection; Comment Request

ACTION: Notice of information collection under review; (Reinstatement, without change, of a previously approved collection for which approval has expired), State Identification Systems Formula Grant Program Application Kit.

The Department of Justice, Office of Justice Programs, Bureau of Justice Assistance, has submitted the following information collection request to the Office of Management and Budget (OMB) for review and clearance in accordance with emergency review procedures of the Paperwork Reduction Act of 1995. OMB approval has been requested by May 26, 1998. The proposed information collection is published to obtain comments from the public and affected agencies. If granted, the emergency approval is only valid for 180 days. Comments should be directed to OMB, Office of Information Regulation Affairs, Attention: Mr. Dennis Marvich, (202) 395–3122, Department of Justice Desk Officer, Washington, DC 20530. During the first 60 days of this same review period, a regular review of this information collection is also being undertaken. All comments and suggestions, or questions regarding additional information, to include obtaining a copy of the proposed information collection instrument with instructions, should be directed to Margaret H. Shelko,(202) 515–6638, South Branch State and Local Assistance Division, Bureau of Justice Assistance, 810 7th Street, NW., Washington DC 20531.

Request written comments and suggestions from the public and affected agencies concerning the proposed collection information. Your comments should address one or more of the following four points:

(1) Evaluate whether the proposed collection of information is necessary for the proper performance of the functions of the agency, including whether the information will have practical utility;

(2) Evaluate the accuracy of the agency's estimate of the burden of the proposed collection of information, including the validity of the methodology and assumptions used;

(3) Enhance the quality, utility, and clarity of the information to be collected; and

(4) Minimize the burden of the collection of information on those who are to respond, including through the use of appropriate automated, electronic, mechanical, or other technological collection techniques or other forms of information technology, e.g., permitting electronic submission of responses.

Overview of This Information

(1) *Type of Information Collection:* Reinstatement of collection for which OMB Clearance has expired.

(2) *Title of the Form/Collection:* State Identification Systems Formula Grant Program Application Kit.

(3) *Agency form number, if any, and the applicable component of the Department sponsoring the collection:* None. Bureau of Justice Assistance, Office of Justice Programs, United States Department of Justice.

(4) *Affected public who will be as or required to respond, as well as a brief abstract:* Primary: State Government. Other: None. The State Identification Systems Formula Grant Program was authorized under the Antiterrorism and Effective Death Penalty Act of 1996 to make funds available to state governments to enhance identification systems of criminal justice agencies at the state and local level.

(5) *An estimate of the total number of respondents and the amount of time estimated for an average respondent to respond/reply:* The time burden of the 52 respondents to complete the survey's is 30 minutes per application.

(6) *An estimate of the total public burden (in hours) associated with the collection:* The total annual hour burden to complete applications for the State Identification Systems Formula Grant Program is 26 annual burden hours.

If additional information is required contact: Ms. Brenda E. Dyer, Deputy Clearance Office, United States Department of Justice, Information Management and Security Staff Justice Management Division, Suite 850, Washington Center, 1001 G Street NW., Washington, DC 20530.

Dated: May 7, 1998.

Brenda E. Dyer,

Department Deputy Clearance Officer, United States Department of Justice.

[FR Doc. 98–12649 Filed 5–12–98; 8:45 am]

BILLING CODE 4410–18–M

DEPARTMENT OF JUSTICE

National Institute of Corrections

Solicitation for a Cooperative Agreement

SUMMARY: The Department of Justice (DOJ), National Institute of Corrections (NIC) announces the availability of funds in FY 98 for a cooperative agreement to fund ''The Management of Institution Mission Change '' project. A similar announced project in FY 97 was not awarded.

PURPOSE: The National Institute of Corrections is seeking applications for a cooperative agreement to survey, identify, and research departments of corrections and individual prisons that have experienced significant mission change because of changing inmate profiles, crowding of prisons, elimination of programs and/or reduction of resources, change in staff to inmate ratios, and other factors. The methodology, processes, and strategies for successful management of mission change will be studied and documented. A report discussing the study and its findings will be submitted and presented in a forum for correctional leaders in which program strategies will be identified for addressing the mission change issue.

AUTHORITY: Public Law 93–415.

FUNDS AVAILABLE: The award will be limited to a maximum total of $100,000 (direct and indirect costs) and project activity must be completed within 12 months of the date of award. Funds may not be used for construction, or to acquire or build real property. This project will be a collaborative venture with the NIC Prisons Division.

DEADLINE FOR RECEIPT OF APPLICATIONS: Applications must be received in NIC's Washington, D.C. office by 4:00 p.m., Eastern daylight savings time, Friday, July 10, 1998.

ADDRESSES AND FURTHER INFORMATION: Requests for the application kit, which includes further details on the project's objectives, etc., should be directed to Judy Evens, Cooperative Agreement Control Office, National Institute of Corrections, 320 First Street, N.W., Room 5007, Washington, D.C. 20534 or by calling 800–995–6423, ext. 159 or 202–307–3106, ext. 159. All technical and/or programmatic questions this announcement should be directed to Dick Franklin at the above address or by calling 800–995–6423 or 202–307–1300, ext. 145, or by E-mail via rfranklin@bop.gov.

REVIEW CONSIDERATIONS: Applications received under this announcement will be subjected to an NIC 3 to 5 member Peer Review Process.

NUMBER OF AWARDS: One (1).

NIC APPLICATION NUMBER: 97P07. This number should appear as a reference line in your cover letter and also in box 11 of Standard Form 424.

EXECUTIVE ORDER 12372: This program is subject to the provisions of Executive Order 12372. Executive Order 12372 allows States that option of setting up a system for reviewing applications from within their States for assistance under certain Federal programs. Applicants (other than Federally-recognized Indian tribal governments) should contact their State Single Point of Contact (SPOC), a list of which is included in the application kit, along with further instructions on proposed projects serving more than one State.

The Catalog of Federal Domestic Assistance number is: 16.603.

Dated: May 11, 1998.

Morris L. Thigpen,

Director, National Institute of Corrections.

[FR Doc. 98–12836 Filed 5–12–98; 8:45 am]

BILLING CODE 4410–36–M

DEPARTMENT OF JUSTICE

National Institute of Corrections

Advisory Board Meeting

TIME AND DATE: 8:00 a.m. to 12 noon on Tuesday, June 23, 1998.

PLACE: DoubleTree Hotel—World Arena, 1775 East Cheyenne Mountain Boulevard, Colorado Springs, Colorado 80906.

STATUS: Open.

MATTERS TO BE CONSIDERED: Fees for Technical/Training Resource Providers; Updates on Strategic Planning and Interstate Compact Activities; and Program Division Reports and FY 1999 Service Plan Recommendations.

CONTACT PERSON FOR MORE INFORMATION: Larry Solomon, Deputy Director, (202) 307–3106, ext. 155.

Morris L. Thigpen,

Director.

[FR Doc. 98–12662 Filed 5–12–98; 8:45 am]

BILLING CODE 4410–36–M

NUCLEAR REGULATORY COMMISSION

[Docket Nos. 50–387 and 50–388]

Pennsylvania Power and Light Company Susquehanna Steam Electric Station, Units 1 and 2; Correction

The April 27, 1998, **Federal Register** contained a ''Notice of Consideration of Issuance of Amendments to Facility Operating Licenses, Proposed No Significant Hazards Consideration Determination, and Opportunity for a Hearing,'' for the Susquehanna Steam Electric Station, Unit 1 and 2. This notice corrects the notice published in the **Federal Register** on April 27, 1998 (63 FR 20667). The application date should read August 1, 1996, instead of August 6, 1996.

Dated at Rockville, Maryland, this 4th day of May 1998.

For the Nuclear Regulatory Commission.

Robert A. Capra,

Director, Project Directorate I–2, Division of Reactor Projects—I/II, Office of Nuclear Reactor Regulation.

[FR Doc. 98–12673 Filed 5–12–98; 8:45 am]

BILLING CODE 7590–01–P

NUCLEAR REGULATORY COMMISSION

[NUREG–1600, Rev. 1]

Revision of NRC Enforcement Policy

AGENCY: Nuclear Regulatory Commission.

ACTION: Policy statement.

SUMMARY: The Nuclear Regulatory Commission (NRC) is publishing a complete revision of the agency's Enforcement Policy (NUREG–1600, ''General Statement of Policy and Procedure for NRC Enforcement Actions'') based on (1) a 2-year review of the revised Enforcement Policy, that was effective June 30, 1995, and (2) a consolidation of changes to the Enforcement Policy since June 30, 1995.

DATES: This action is effective May 13, 1998, while comments are being received. Submit comments on or before June 29, 1998.

ADDRESSES: Submit written comments to: David L. Meyer, Chief, Rules and Directives Branch, Division of Administrative Services, Office of Administration, Mail Stop: T6D59, U.S. Nuclear Regulatory Commission, Washington, DC 20555. Hand deliver comments to: 11555 Rockville Pike, Rockville, Maryland, between 7:30 am and 4:15 pm, Federal workdays. Copies of comments received may be examined at the NRC Public Document Room, 2120 L Street, NW, (Lower Level), Washington, DC.

FOR FURTHER INFORMATION CONTACT: James Lieberman, Director, Office of Enforcement, U.S. Nuclear Regulatory Commission, Washington, DC 20555, (301) 415–2741.

SUPPLEMENTARY INFORMATION: On June 30, 1995, the Commission published a complete revision of the NRC's Enforcement Policy (60 FR 34381). The changes to the Enforcement Policy resulted from the efforts of a review team established in 1994 to assess the NRC's enforcement program. The review team published its recommendations in NUREG–1525, ''Assessment of the NRC Enforcement Program,'' and the Commission made revisions to the Enforcement Policy after considering those recommendations. The revisions to the Enforcement Policy were intended to, among other things:

- Emphasize the importance of identifying problems before events occur, and of taking prompt, comprehensive corrective action when problems are identified;
- Direct agency attention at licensees with multiple enforcement actions in a relatively short period; and
- Focus on current performance of licensees.

The revisions to the Enforcement Policy were also intended to better focus the inspection and enforcement process on safety, provide greater incentives for strong self-monitoring and corrective action programs in the civil penalty assessment process, provide more predictability and consistency in the civil penalty assessment process, and to better convey clear regulatory messages.

When the Commission published the revised Enforcement Policy in the **Federal Register** on June 30, 1995, it stated that it would provide the public an opportunity to comment on the revised Enforcement Policy after it had been in effect for about 18 months. On February 5, 1997 (62 FR 5495), the Commission published an opportunity for the public to comment on the revised Enforcement Policy.

The NRC has reviewed approximately 2 years of experience under the revised Enforcement Policy and considered public comments. The NRC staff prepared a report (NUREG–1622,[1] ''NRC Enforcement Policy Review: July 1995—July 1997,'' November 1997) that concluded that the changes made to the Enforcement Policy in 1995 (especially in the civil penalty assessment process) have helped to improve the predictability and consistency of enforcement actions, while maintaining the agency's desire to use enforcement sanctions for providing appropriate emphasis and deterrence in a way that helps to support the agency's overall safety mission. This conclusion is

[1] Copies of NUREG–1622 may be purchased from the Superintendent of Documents, U.S. Government Printing Office, Mail Stop SSOP, Washington, DC 20402–9328. Copies are also available from the National Technical Information Service, 5285 Port Royal Road, Springfield, Virginia 22161. A copy is also available for inspection and copying for a fee in the NRC Public Document Room, 2120 L Street, NW. (Lower Level), Washington, DC 20555–0001. The report is also included on the NRC's Office of Enforcement's homepage on the Internet at www.nrc.gov/OE/.

reflected in several aspects of the Enforcement Policy:

- The current Enforcement Policy is appropriately geared toward creating deterrence (i.e., taking action in a manner that provides incentives to identify and correct violations that have occurred and discourage future violations) and is properly structured for nuclear regulation.
- The Enforcement Policy recognizes that violations have varying degrees of safety significance, and that in considering the significance of a violation, it is appropriate to consider the technical significance (i.e., actual and potential consequences) and the regulatory significance. In addition, risk is an appropriate consideration in evaluating the technical significance of a violation.
- The Enforcement Policy is appropriately structured to maintain a focus on safety.
- The current civil penalty assessment process is appropriately structured to reflect issues the agency believes are appropriate to consider in assessing whether a civil penalty should be proposed, i.e., past performance, identification, corrective action, and those warranting discretion.
- The use of discretion and judgment throughout the deliberative process recognizes that enforcement of NRC requirements does not lend itself to mechanistic treatment.

Notwithstanding the general satisfaction with the Enforcement Policy, the review included a number of recommendations to the Commission for revisions to the Enforcement Policy and for development of additional enforcement guidance. The Commission is issuing this policy statement after considering those recommendations and the bases for them in NUREG–1622.

The more significant changes to the Enforcement Policy (in the order that they appear in the Policy) are described below:

I. Introduction and Purpose

This section has been modified to include a brief discussion on the meaning of ''safety'' and ''compliance'' as they are used in the context of this policy statement. This section also references a new appendix (Appendix A) that describes the nexus between safety and compliance.

III. Responsibilities

This section has been modified to reflect that the Chief Financial Officer (CFO) is delegated the authority to issue orders where licensees violate Commission regulations by nonpayment of license and inspection fees. The Office of the Chief Financial Officer (OCFO) was created as part of the NRC's January 5, 1997, reorganization. The Office of the Controller has now been incorporated into the OCFO and the position of the Director, Office of the Controller (previously identified in the policy as having the issuing authority), has been subsumed by the CFO.

This section has also been modified to emphasize that the technical *and regulatory significance of violations are considered in conjunction with the principles of the policy statement and the surrounding circumstances when the agency determines the appropriate enforcement strategy.*

This section has also been revised to indicate that the Commission is to be provided notification (where appropriate, based on the uniqueness or significance of the issue) for a plant meeting the criteria of Section VII.B.6 (mitigation for violations involving special circumstances). This is consistent with the policy revision to Section VII issued on December 26, 1996 (61 FR 68070).

IV. Severity of Violations

This section has been modified such that minor violations will no longer be noted as Non-Cited Violations (NCVs) when they are documented in inspection reports. Instead, if a minor violation warrants documentation, it will be noted as a violation of minor significance that is not subject to formal enforcement action. The definition of an NCV included in footnote 6 has also been deleted. The purpose of these changes is to avoid confusion between minor violations dispositioned as NCVs in accordance with Section IV and Severity Level IV violations dispositioned as NCVs in accordance with Section VII.B.1, ''Licensee-Identified Severity Level IV Violations.'' Use of the term ''NCV'' will now be reserved for those Severity Level IV violations that meet the criteria for discretion in Section VII.B.1.

V. Predecisional Enforcement Conferences

This section has been modified to indicate that a predecisional enforcement conference is not required if the NRC has sufficient information to make an informed enforcement decision. If a conference is not held, the licensee *may* be requested to provide a written response to an inspection report as to the licensee's views on the apparent violations and their root causes and a description of planned or implemented corrective actions. (The previous discussion indicated that the licensee *will normally* be requested to provide a written response.) It is the NRC's intent that this approach will normally be taken in the event a civil penalty is under consideration. This section has also been modified to include an additional option when a conference is not held, such that the NRC may proceed to issue an enforcement action without first obtaining the licensee's response to the inspection report, if the NRC has sufficient information to conclude that a civil penalty is not warranted. This approach would still: (1) Provide licensees an opportunity to request a conference to dispute the action, (2) provide licensees an opportunity to dispute the action in writing through the provisions of 10 CFR 2.201 (as with any Notice of Violation), (3) allow the NRC to conduct a conference where matters are disputed or where the licensee's documented corrective actions are not sufficiently prompt and comprehensive, and (4) provide for modification or recision of the NOV, if appropriate.

It should be noted that these modifications are not meant to be construed as exclusive enforcement options. In other words, it does not change the existing practice whereby the NRC may choose to issue an enforcement action (including civil penalties and orders) without conducting a conference. These changes are being made in an effort to make the enforcement process more efficient (by reducing the number of conferences and reducing the workload of both the NRC and licensees and improving the timeliness of enforcement actions).

VI. Enforcement Actions

This general discussion of the NRC's philosophy and approach to taking enforcement has been modified by including the recognition that circumstances regarding a violation may warrant discretion such that the NRC may refrain from issuing a Notice of Violation or other enforcement action. This discussion was previously included in Section VI.A, ''Notice of Violation,'' and has been more appropriately relocated to this section.

A. Notice of Violation

The NRC has had a long-standing policy that licensees are not ordinarily cited for violations resulting from matters not within their control, such as equipment failures that are not avoidable by reasonable licensee quality assurance measures or management controls. This discussion has been deleted from this section and more appropriately included in the discussion on mitigation of sanctions in

Section VII.B.6, ''Violations Involving Special Circumstances.''

B. Civil Penalty

1. Base Civil Penalty

Table 1A has been revised to correct the inadvertent omission of a footnote that indicates that large firms engaged in manufacturing or distribution of byproduct, source, or special nuclear material be considered as industrial processors. Table 1A had included this footnote prior to the 1995 policy revision and this footnote was included in the table in the draft **Federal Register** notice that the Commission approved for publication and in the table in Section II.D.7.c of NUREG–1525. Table 1A has also been revised to include additional guidance in determining which category material users should be considered under by including ''other large material users'' in category ''c'' and ''other small materials users'' in category ''d.''

VII. Exercise of Discretion

B. Mitigation of Enforcement Sanctions

Section VII.B.1, ''Licensee-Identified Severity Level IV Violations,'' is being modified to address licensee-identified violations that are identified as a result of an event. On December 10, 1996 (61 FR 65088), the Commission issued a revision to the Enforcement Policy that included a modification to the criterion in Section VII.B.1.a. Specifically, the phrase ''including identification through an event'' was deleted from the criterion. The modification was intended to make it clear that use of discretion is not automatic if the violation is identified through an event. A footnote is being included to the criterion to address how the NRC will normally consider violations that are identified as a result of an event.

The Commission recognizes that there may be particular circumstances in a case where discretion is warranted and the NRC should refrain from issuing enforcement action. Sections VII.B.3, VII.B.4, and VII.B.6 of the Enforcement Policy provide that discretion may be warranted for certain Severity Level II and III violations. If the circumstances of a particular case may warrant discretion at Severity Level II or III, then discretion may also be appropriate at Severity Level IV. Therefore, changes have been made to the examples to reflect that the NRC may choose to refrain from issuing a Notice of Violation for a Severity Level IV violation.

Section VII.B.6 was also modified to include additional factors for consideration, including whether the regulatory requirement that was violated was clear, or given the NRC's current information, appropriate. As previously addressed, this section also includes that the NRC may refrain from issuing enforcement action for violations resulting from matters beyond a licensee's control. However, licensees are generally responsible for the actions of its employees. The revised text, consistent with long-standing NRC interpretation, makes it clear that licensees are also responsible for the actions of their contractors.

Appendix A: Safety and Compliance

This appendix has been added to address the NRC's philosophy on the nexus between safety and compliance.

Appendix B: Supplements—Violation Examples

This appendix was administratively created as a result of the addition of Appendix A and includes the previous guidance included in the Supplements section of the policy.

Supplement VII—Miscellaneous Matters

Examples B.4 and C.4 have been revised to reflect NRC practice in applying Severity Level II and III categorization for violations involving discrimination. In particular, Severity Level II categorization is appropriate for discriminatory acts by middle to upper management, not simply any level above first-line supervision. Severity Level III categorization is appropriate for low-level supervision and management, even if they are above a first-line supervisor.

Paperwork Reduction Act

This policy statement does not contain a new or amended information collection requirement subject to the Paperwork Reduction Act of 1995 (44 U.S.C. 3501 *et seq.*). Existing requirements were approved by the Office of Management and Budget, approval number 3150–0136. The approved information collection requirements contained in this policy statement appear in Section VII.C.

Public Protection Notification

The NRC may not conduct or sponsor, and a person is not required to respond to, a collection of information unless it displays a currently valid OMB control number.

Small Business Regulatory Enforcement Fairness Act

In accordance with the Small Business Regulatory Enforcement Fairness Act of 1996, the NRC has determined that this action is not a major rule and has verified this determination with the Office of Information and Regulatory Affairs of OMB.

Accordingly, the NRC Enforcement Policy is revised to read as follows:

GENERAL STATEMENT OF POLICY AND PROCEDURE FOR NRC ENFORCEMENT ACTIONS

Table of Contents

Preface
I. Introduction and Purpose
II. Statutory Authority
A. Statutory Authority
B. Procedural Framework
III. Responsibilities
IV. Severity of Violations
A. Aggregation of Violations
B. Repetitive Violations
C. Willful Violations
D. Violations of Reporting Requirements
V. Predecisional Enforcement Conferences
VI. Enforcement Actions
A. Notice of Violation
B. Civil Penalty
1. Base Civil Penalty
2. Civil Penalty Assessment
a. Initial Escalated Action
b. Credit for Actions Related to Identification
c. Credit for Prompt and Comprehensive Corrective Action
d. Exercise of Discretion
C. Orders
D. Related Administrative Actions
VII. Exercise of Discretion
A. Escalation of Enforcement Sanctions
1. Civil Penalties
2. Orders
3. Daily Civil Penalties
B. Mitigation of Enforcement Sanctions
1. Licensee-Identified Severity Level IV Violations
2. Violations Identified During Extended Shutdowns or Work Stoppages
3. Violations Involving Old Design Issues
4. Violations Identified Due to Previous Enforcement Action
5. Violations Involving Discrimination
6. Violations Involving Special Circumstances
C. Exercise of Discretion for an Operating Facility
VIII. Enforcement Actions Involving Individuals
IX. Inaccurate and Incomplete Information
X. Enforcement Action Against Non-Licensees
XI. Referrals to the Department of Justice
XII. Public Disclosure of Enforcement Actions
XIII. Reopening Closed Enforcement Actions
Appendix A: Safety and Compliance
Appendix B: Supplements—Violation Examples

Preface

The following statement of general policy and procedure explains the enforcement policy and procedures of the U.S. Nuclear Regulatory Commission (NRC or Commission) and

the NRC staff (staff) in initiating enforcement actions, and of the presiding officers and the Commission in reviewing these actions. This statement is applicable to enforcement in matters involving the radiological health and safety of the public, including employees' health and safety, the common defense and security, and the environment.[1] This statement of general policy and procedure will be published as NUREG–1600 to provide widespread dissemination of the Commission's Enforcement Policy. However, this is a policy statement and not a regulation. The Commission may deviate from this statement of policy and procedure as appropriate under the circumstances of a particular case.

I. Introduction and Purpose

The purpose of the NRC enforcement program is to support the NRC's overall safety mission in protecting the public and the environment. Consistent with that purpose, enforcement action should be used:

- As a deterrent to emphasize the importance of compliance with requirements, and
- To encourage prompt identification and prompt, comprehensive correction of violations.

Consistent with the purpose of this program, prompt and vigorous enforcement action will be taken when dealing with licensees, contractors,[2] and their employees, who do not achieve the necessary meticulous attention to detail and the high standard of compliance which the NRC expects.[3] Each enforcement action is dependent on the circumstances of the case and requires the exercise of discretion after consideration of this enforcement policy. In no case, however, will licensees who cannot achieve and maintain adequate levels of safety be permitted to conduct licensed activities.

For purposes of this policy statement, safety means avoiding undue risk, i.e., providing reasonable assurance of adequate protection for the public in connection with the use of source, byproduct and special nuclear materials. Compliance means meeting regulatory requirements. Appendix A to this policy statement describes the nexus between safety and compliance.

II. Statutory Authority and Procedural Framework

A. Statutory Authority

The NRC's enforcement jurisdiction is drawn from the Atomic Energy Act of 1954, as amended, and the Energy Reorganization Act (ERA) of 1974, as amended.

Section 161 of the Atomic Energy Act authorizes the NRC to conduct inspections and investigations and to issue orders as may be necessary or desirable to promote the common defense and security or to protect health or to minimize danger to life or property. Section 186 authorizes the NRC to revoke licenses under certain circumstances (e.g., for material false statements, in response to conditions that would have warranted refusal of a license on an original application, for a licensee's failure to build or operate a facility in accordance with the terms of the permit or license, and for violation of an NRC regulation). Section 234 authorizes the NRC to impose civil penalties not to exceed $100,000 per violation per day for the violation of certain specified licensing provisions of the Act, rules, orders, and license terms implementing these provisions, and for violations for which licenses can be revoked. In addition to the enumerated provisions in section 234, sections 84 and 147 authorize the imposition of civil penalties for violations of regulations implementing those provisions. Section 232 authorizes the NRC to seek injunctive or other equitable relief for violation of regulatory requirements.

Section 206 of the Energy Reorganization Act authorizes the NRC to impose civil penalties for knowing and conscious failures to provide certain safety information to the NRC.

Notwithstanding the $100,000 limit stated in the Atomic Energy Act, the Commission may impose higher civil penalties as provided by the Debt Collection Improvement Act of 1996. Under the Act, the Commission is required to modify civil monetary penalties to reflect inflation. The adjusted maximum civil penalty amount is reflected in 10 CFR 2.205 and this Policy Statement.

Chapter 18 of the Atomic Energy Act provides for varying levels of criminal penalties (i.e., monetary fines and imprisonment) for willful violations of the Act and regulations or orders issued under sections 65, 161(b), 161(i), or 161(o) of the Act. Section 223 provides that criminal penalties may be imposed on certain individuals employed by firms constructing or supplying basic components of any utilization facility if the individual knowingly and willfully violates NRC requirements such that a basic component could be significantly impaired. Section 235 provides that criminal penalties may be imposed on persons who interfere with inspectors. Section 236 provides that criminal penalties may be imposed on persons who attempt to or cause sabotage at a nuclear facility or to nuclear fuel. Alleged or suspected criminal violations of the Atomic Energy Act are referred to the Department of Justice for appropriate action.

B. Procedural Framework

Subpart B of 10 CFR Part 2 of NRC's regulations sets forth the procedures the NRC uses in exercising its enforcement authority. 10 CFR 2.201 sets forth the procedures for issuing notices of violation.

The procedure to be used in assessing civil penalties is set forth in 10 CFR 2.205. This regulation provides that the civil penalty process is initiated by issuing a Notice of Violation and Proposed Imposition of a Civil Penalty. The licensee or other person is provided an opportunity to contest in writing the proposed imposition of a civil penalty. After evaluation of the response, the civil penalty may be mitigated, remitted, or imposed. An opportunity is provided for a hearing if a civil penalty is imposed. If a civil penalty is not paid following a hearing or if a hearing is not requested, the matter may be referred to the U.S. Department of Justice to institute a civil action in District Court.

The procedure for issuing an order to institute a proceeding to modify, suspend, or revoke a license or to take other action against a licensee or other person subject to the jurisdiction of the Commission is set forth in 10 CFR 2.202. The licensee or any other person adversely affected by the order may request a hearing. The NRC is authorized to make orders immediately effective if required to protect the public health, safety, or interest, or if the violation is willful. Section 2.204 sets out the procedures for issuing a Demand for Information (Demand) to a licensee or other person subject to the Commission's jurisdiction for the purpose of determining whether an order or other enforcement action should be issued. The Demand does not

[1] Antitrust enforcement matters will be dealt with on a case-by-case basis.

[2] The term ''contractor'' as used in this policy inlcudes vendors who supply products or services to be used in an NRC-licensed facility or activity.

[3] This policy primarily addresses the activities of NRC licensees and applicants for NRC linceses. Therefore, the term ''licensee'' is used throughout the policy. However, in those cases where the NRC determines that it is appropriate to take enforcement action against a non-licensee or individual, the guidance in this policy will be used, as applicable. These non-licensees include contractors and subcontractors, holders of, or applicants for, NRC approvals, e.g, certificates of compliance, early site permits, or standard design certiciates and the employees of these non-licensees. Specific guidance regarding enforcement action against individuals and non-licensees is addressed in Sections VIII and X. respectively.

provide hearing rights, as only information is being sought. A licensee must answer a Demand. An unlicensed person may answer a Demand by either providing the requested information or explaining why the Demand should not have been issued.

III. Responsibilities

The Executive Director for Operations (EDO) and the principal enforcement officer of the NRC, the Deputy Executive Director for Regulatory Effectiveness, hereafter referred to as the Deputy Executive Director, has been delegated the authority to approve or issue all escalated enforcement actions.[4] The Deputy Executive Director is responsible to the EDO for the NRC enforcement program. The Office of Enforcement (OE) exercises oversight of and implements the NRC enforcement program. The Director, OE, acts for the Deputy Executive Director in enforcement matters in his absence or as delegated.

Subject to the oversight and direction of OE, and with the approval of the Deputy Executive Director, where necessary, the regional offices normally issue Notices of Violation and proposed civil penalties. However, subject to the same oversight as the regional offices, the Office of Nuclear Reactor Regulation (NRR) and the Office of Nuclear Material Safety and Safeguards (NMSS) may also issue Notices of Violation and proposed civil penalties for certain activities. Enforcement orders are normally issued by the Deputy Executive Director or the Director, OE. However, orders may also be issued by the EDO, especially those involving the more significant matters. The Directors of NRR and NMSS have also been delegated authority to issue orders, but it is expected that normal use of this authority by NRR and NMSS will be confined to actions not associated with compliance issues. The Chief Financial Officer has been delegated the authority to issue orders where licensees violate Commission regulations by nonpayment of license and inspection fees.

In recognition that the regulation of nuclear activities in many cases does not lend itself to a mechanistic treatment, judgment and discretion must be exercised in determining the severity levels of the violations and the appropriate enforcement sanctions, including the decision to issue a Notice of Violation, or to propose or impose a civil penalty and the amount of this penalty, after considering the general principles of this statement of policy and the technical and regulatory significance of the violations and the surrounding circumstances.

Unless Commission consultation or notification is required by this policy, the NRC staff may depart, where warranted in the public's interest, from this policy as provided in Section VII, ''Exercise of Enforcement Discretion.'' The Commission will be provided written notification of all enforcement actions involving civil penalties or orders. The Commission will also be provided notice the first time that discretion is exercised for a plant meeting the criteria of Section VII.B.2. The Commission is also to be provided notification (where appropriate, based on the uniqueness or significance of the issue) for a plant meeting the criteria of Section VII.B.6. In addition, the Commission will be consulted prior to taking action in the following situations (unless the urgency of the situation dictates immediate action):

(1) An action affecting a licensee's operation that requires balancing the public health and safety or common defense and security implications of not operating with the potential radiological or other hazards associated with continued operation;

(2) Proposals to impose a civil penalty for a single violation or problem that is greater than 3 times the Severity Level I value shown in Table 1A for that class of licensee;

(3) Any proposed enforcement action that involves a Severity Level I violation;

(4) Any action the EDO believes warrants Commission involvement;

(5) Any proposed enforcement case involving an Office of Investigations (OI) report where the NRC staff (other than the OI staff) does not arrive at the same conclusions as those in the OI report concerning issues of intent if the Director of OI concludes that Commission consultation is warranted; and

(6) Any proposed enforcement action on which the Commission asks to be consulted.

IV. Severity of Violations

Regulatory requirements[5] have varying degrees of safety, safeguards, or environmental significance. Therefore, the relative importance of each violation, including both the technical significance and the regulatory significance, is evaluated as the first step in the enforcement process. In considering the significance of a violation, the staff considers the technical significance, i.e., actual and potential consequences, and the regulatory significance. In evaluating the technical significance, risk is an appropriate consideration.

Consequently, for purposes of formal enforcement action, violations are normally categorized in terms of four levels of severity to show their relative importance within each of the following eight activity areas:

I. Reactor Operations;
II. Facility Construction;
III. Safeguards;
IV. Health Physics;
V. Transportation;
VI. Fuel Cycle and Materials Operations;
VII. Miscellaneous Matters; and
VIII. Emergency Preparedness.

Licensed activities will be placed in the activity area most suitable in light of the particular violation involved including activities not directly covered by one of the above listed areas, e.g., export license activities. Within each activity area, Severity Level I has been assigned to violations that are the most significant and Severity Level IV violations are the least significant. Severity Level I and II violations are of very significant regulatory concern. In general, violations that are included in these severity categories involve actual or high potential impact on the public. Severity Level III violations are cause for significant regulatory concern. Severity Level IV violations are less serious but are of more than minor concern; i.e., if left uncorrected, they could lead to a more serious concern.

The Commission recognizes that there are other violations of minor safety or environmental concern which are below the level of significance of Severity Level IV violations. These minor violations are not the subject of formal enforcement action and are not usually described in inspection reports. To the extent such violations are described, they will be noted as violations of minor significance that are not subject to formal enforcement action.

Comparisons of significance between activity areas are inappropriate. For example, the immediacy of any hazard to the public associated with Severity Level I violations in Reactor Operations is not directly comparable to that associated with Severity Level I violations in Facility Construction.

Supplements I through VIII provide examples and serve as guidance in determining the appropriate severity level for violations in each of the eight activity areas. However, the examples

[4] The term ''escalated enforcement action'' as used in this policy means a Notice of Violation or civil penalty for any Severity Level I, II, or III violation (or problem) or any order based upon a violation.

[5] The term ''requirement'' as used in this policy means a legally binding requirement such as a statute, regulation, license condition, technical specification, or order.

are neither exhaustive nor controlling. In addition, these examples do not create new requirements. Each is designed to illustrate the significance that the NRC places on a particular type of violation of NRC requirements. Each of the examples in the supplements is predicated on a violation of a regulatory requirement.

The NRC reviews each case being considered for enforcement action on its own merits to ensure that the severity of a violation is characterized at the level best suited to the significance of the particular violation. In some cases, special circumstances may warrant an adjustment to the severity level categorization.

A. Aggregation of Violations

A group of Severity Level IV violations may be evaluated in the aggregate and assigned a single, increased severity level, thereby resulting in a Severity Level III problem, if the violations have the same underlying cause or programmatic deficiencies, or the violations contributed to or were unavoidable consequences of the underlying problem. Normally, Severity Level II and III violations are not aggregated into a higher severity level.

The purpose of aggregating violations is to focus the licensee's attention on the fundamental underlying causes for which enforcement action appears warranted and to reflect the fact that several violations with a common cause may be more significant collectively than individually and may, therefore, warrant a more substantial enforcement action.

B. Repetitive Violations

The severity level of a Severity Level IV violation may be increased to Severity Level III, if the violation can be considered a repetitive violation.[6] The purpose of escalating the severity level of a repetitive violation is to acknowledge the added significance of the situation based on the licensee's failure to implement effective corrective action for the previous violation. The decision to escalate the severity level of a repetitive violation will depend on the circumstances, such as, but not limited to, the number of times the violation has occurred, the similarity of the violations and their root causes, the adequacy of previous corrective actions, the period of time between the violations, and the significance of the violations.

C. Willful Violations

Willful violations are by definition of particular concern to the Commission because its regulatory program is based on licensees and their contractors, employees, and agents acting with integrity and communicating with candor. Willful violations cannot be tolerated by either the Commission or a licensee. Licensees are expected to take significant remedial action in responding to willful violations commensurate with the circumstances such that it demonstrates the seriousness of the violation thereby creating a deterrent effect within the licensee's organization. Although removal of the person is not necessarily required, substantial disciplinary action is expected.

Therefore, the severity level of a violation may be increased if the circumstances surrounding the matter involve careless disregard of requirements, deception, or other indications of willfulness. The term ''willfulness'' as used in this policy embraces a spectrum of violations ranging from deliberate intent to violate or falsify to and including careless disregard for requirements. Willfulness does not include acts which do not rise to the level of careless disregard, e.g., inadvertent clerical errors in a document submitted to the NRC. In determining the specific severity level of a violation involving willfulness, consideration will be given to such factors as the position and responsibilities of the person involved in the violation (e.g., licensee official[7] or non-supervisory employee), the significance of any underlying violation, the intent of the violator (i.e., careless disregard or deliberateness), and the economic or other advantage, if any, gained as a result of the violation. The relative weight given to each of these factors in arriving at the appropriate severity level will be dependent on the circumstances of the violation. However, if a licensee refuses to correct a minor violation within a reasonable time such that it willfully continues, the violation should be categorized at least at a Severity Level IV.

D. Violations of Reporting Requirements

The NRC expects licensees to provide complete, accurate, and timely information and reports. Accordingly, unless otherwise categorized in the Supplements, the severity level of a violation involving the failure to make a required report to the NRC will be based upon the significance of and the circumstances surrounding the matter that should have been reported. However, the severity level of an untimely report, in contrast to no report, may be reduced depending on the circumstances surrounding the matter. A licensee will not normally be cited for a failure to report a condition or event unless the licensee was actually aware of the condition or event that it failed to report. A licensee will, on the other hand, normally be cited for a failure to report a condition or event if the licensee knew of the information to be reported, but did not recognize that it was required to make a report.

V. Predecisional Enforcement Conferences

Whenever the NRC has learned of the existence of a potential violation for which escalated enforcement action appears to be warranted, or recurring nonconformance on the part of a contractor, the NRC may provide an opportunity for a predecisional enforcement conference with the licensee, contractor, or other person before taking enforcement action. The purpose of the conference is to obtain information that will assist the NRC in determining the appropriate enforcement action, such as: (1) A common understanding of facts, root causes and missed opportunities associated with the apparent violations, (2) a common understanding of corrective actions taken or planned, and (3) a common understanding of the significance of issues and the need for lasting comprehensive corrective action.

If the NRC concludes that it has sufficient information to make an informed enforcement decision, a conference will not normally be held. However, an opportunity for a conference will normally be provided before issuing an order based on a violation of the rule on Deliberate Misconduct or a civil penalty to an unlicensed person. If a conference is not held, the licensee may be requested to provide a written response to an inspection report, if issued, as to the licensee's views on the apparent violations and their root causes and a

[6] The term ''repetitive violation'' or ''similar violation'' as used in this policy statement means a violation that reasonably could have been prevented by a licensee's corrective action for a previous violation normally occurring (1) within the past 2 years of the inspection at issue, or (2) the period within the last two inspections, whichever is longer.

[7] The term ''licensee official'' as used in this policy statement means a first-line supervisor or above, a licensed individual, a radiation safety officer, or an authorized user of licensed material whether or not listed on a license. Notwithstanding an individual's job title, severity level categorization for willful acts involving individuals who can be considered licensee officials will consider several factors, including the position of the individual relative to the licensee's organizational structure and the individual's responsibilities relative to the oversight of licensed activities and to the use of licensed material.

description of planned or implemented corrective actions. However, if the NRC has sufficient information to conclude that a civil penalty is not warranted, it may proceed to issue an enforcement action without first obtaining the licensee's response to the inspection report.

During the predecisional enforcement conference, the licensee, contractor, or other persons will be given an opportunity to provide information consistent with the purpose of the conference, including an explanation to the NRC of the immediate corrective actions (if any) that were taken following identification of the potential violation or nonconformance and the long-term comprehensive actions that were taken or will be taken to prevent recurrence. Licensees, contractors, or other persons will be told when a meeting is a predecisional enforcement conference.

A predecisional enforcement conference is a meeting between the NRC and the licensee. Conferences are normally held in the regional offices and are normally open to public observation. Conferences will not normally be open to the public if the enforcement action being contemplated:

(1) Would be taken against an individual, or if the action, though not taken against an individual, turns on whether an individual has committed wrongdoing;

(2) Involves significant personnel failures where the NRC has requested that the individual(s) involved be present at the conference;

(3) Is based on the findings of an NRC Office of Investigations report that has not been publicly disclosed; or

(4) Involves safeguards information, Privacy Act information, or information which could be considered proprietary;

In addition, conferences will not normally be open to the public if:

(5) The conference involves medical misadministrations or overexposures and the conference cannot be conducted without disclosing the exposed individual's name; or

(6) The conference will be conducted by telephone or the conference will be conducted at a relatively small licensee's facility.

Notwithstanding meeting any of these criteria, a conference may still be open if the conference involves issues related to an ongoing adjudicatory proceeding with one or more intervenors or where the evidentiary basis for the conference is a matter of public record, such as an adjudicatory decision by the Department of Labor. In addition, notwithstanding the above normal criteria for opening or closing conferences, with the approval of the Executive Director for Operations, conferences may either be open or closed to the public after balancing the benefit of the public's observation against the potential impact on the agency's decision-making process in a particular case.

The NRC will notify the licensee that the conference will be open to public observation. Consistent with the agency's policy on open meetings, ''Staff Meetings Open to Public,'' published September 20, 1994 (59 FR 48340), the NRC intends to announce open conferences normally at least 10 working days in advance of conferences through (1) notices posted in the Public Document Room, (2) a toll-free telephone recording at 800–952–9674, (3) a toll-free electronic bulletin board at 800–952–9676, and on the World Wide Web at the NRC Office of Enforcement homepage (www.nrc.gov/OE). In addition, the NRC will also issue a press release and notify appropriate State liaison officers that a predecisional enforcement conference has been scheduled and that it is open to public observation.

The public attending open conferences may observe but may not participate in the conference. It is noted that the purpose of conducting open conferences is not to maximize public attendance, but rather to provide the public with opportunities to be informed of NRC activities consistent with the NRC's ability to exercise its regulatory and safety responsibilities. Therefore, members of the public will be allowed access to the NRC regional offices to attend open enforcement conferences in accordance with the ''Standard Operating Procedures For Providing Security Support For NRC Hearings and Meetings,'' published November 1, 1991 (56 FR 56251). These procedures provide that visitors may be subject to personnel screening, that signs, banners, posters, etc., not larger than 18″ be permitted, and that disruptive persons may be removed. The open conference will be terminated if disruption interferes with a successful conference. NRC's Predecisional Enforcement Conferences (whether open or closed) normally will be held at the NRC's regional offices or in NRC Headquarters Offices and not in the vicinity of the licensee's facility.

For a case in which an NRC Office of Investigations (OI) report finds that discrimination as defined under 10 CFR 50.7 (or similar provisions in Parts 30, 40, 60, 70, or 72) has occurred, the OI report may be made public, subject to withholding certain information (i.e., after appropriate redaction), in which case the associated predecisional enforcement conference will normally be open to public observation. In a conference where a particular individual is being considered potentially responsible for the discrimination, the conference will remain closed. In either case (i.e., whether the conference is open or closed), the employee or former employee who was the subject of the alleged discrimination (hereafter referred to as ''complainant'') will normally be provided an opportunity to participate in the predecisional enforcement conference with the licensee/employer. This participation will normally be in the form of a complainant statement and comment on the licensee's presentation, followed in turn by an opportunity for the licensee to respond to the complainant's presentation. In cases where the complainant is unable to attend in person, arrangements will be made for the complainant's participation by telephone or an opportunity given for the complainant to submit a written response to the licensee's presentation. If the licensee chooses to forego an enforcement conference and, instead, responds to the NRC's findings in writing, the complainant will be provided the opportunity to submit written comments on the licensee's response. For cases involving potential discrimination by a contractor, any associated predecisional enforcement conference with the contractor would be handled similarly. These arrangements for complainant participation in the predecisional enforcement conference are not to be conducted or viewed in any respect as an adjudicatory hearing. The purpose of the complainant's participation is to provide information to the NRC to assist it in its enforcement deliberations.

A predecisional enforcement conference may not need to be held in cases where there is a full adjudicatory record before the Department of Labor. If a conference is held in such cases, generally the conference will focus on the licensee's corrective action. As with discrimination cases based on OI investigations, the complainant may be allowed to participate.

Members of the public attending open conferences will be reminded that (1) the apparent violations discussed at predecisional enforcement conferences are subject to further review and may be subject to change prior to any resulting enforcement action and (2) the statements of views or expressions of opinion made by NRC employees at predecisional enforcement conferences,

or the lack thereof, are not intended to represent final determinations or beliefs.

When needed to protect the public health and safety or common defense and security, escalated enforcement action, such as the issuance of an immediately effective order, will be taken before the conference. In these cases, a conference may be held after the escalated enforcement action is taken.

VI. Enforcement Actions

This section describes the enforcement sanctions available to the NRC and specifies the conditions under which each may be used. The basic enforcement sanctions are Notices of Violation, civil penalties, and orders of various types. As discussed further in Section VI.D, related administrative actions such as Notices of Nonconformance, Notices of Deviation, Confirmatory Action Letters, Letters of Reprimand, and Demands for Information are used to supplement the enforcement program. In selecting the enforcement sanctions or administrative actions, the NRC will consider enforcement actions taken by other Federal or State regulatory bodies having concurrent jurisdiction, such as in transportation matters.

Usually, whenever a violation of NRC requirements of more than a minor concern is identified, enforcement action is taken. The nature and extent of the enforcement action is intended to reflect the seriousness of the violation involved. For the vast majority of violations, a Notice of Violation or a Notice of Nonconformance is the normal action.

However, circumstances regarding the violation findings may warrant discretion being exercised such that the NRC refrains from issuing a Notice of Violation or other enforcement action. (See Section VII.B, ''Mitigation of Enforcement Sanctions.'')

A. Notice of Violation

A Notice of Violation is a written notice setting forth one or more violations of a legally binding requirement. The Notice of Violation normally requires the recipient to provide a written statement describing (1) the reasons for the violation or, if contested, the basis for disputing the violation; (2) corrective steps that have been taken and the results achieved; (3) corrective steps that will be taken to prevent recurrence; and (4) the date when full compliance will be achieved. The NRC may waive all or portions of a written response to the extent relevant information has already been provided to the NRC in writing or documented in an NRC inspection report. The NRC may require responses to Notices of Violation to be under oath. Normally, responses under oath will be required only in connection with Severity Level I, II, or III violations or orders.

The NRC uses the Notice of Violation as the usual method for formalizing the existence of a violation. Issuance of a Notice of Violation is normally the only enforcement action taken, except in cases where the criteria for issuance of civil penalties and orders, as set forth in Sections VI.B and VI.C, respectively, are met.

B. Civil Penalty

A civil penalty is a monetary penalty that may be imposed for violation of (1) certain specified licensing provisions of the Atomic Energy Act or supplementary NRC rules or orders; (2) any requirement for which a license may be revoked; or (3) reporting requirements under section 206 of the Energy Reorganization Act. Civil penalties are designed to deter future violations both by the involved licensee as well as by other licensees conducting similar activities and to emphasize the need for licensees to identify violations and take prompt comprehensive corrective action.

Civil penalties are considered for Severity Level III violations. In addition, civil penalties will normally be assessed for Severity Level I and II violations and knowing and conscious violations of the reporting requirements of section 206 of the Energy Reorganization Act.

Civil penalties are used to encourage prompt identification and prompt and comprehensive correction of violations, to emphasize compliance in a manner that deters future violations, and to serve to focus licensees' attention on violations of significant regulatory concern.

Although management involvement, direct or indirect, in a violation may lead to an increase in the civil penalty, the lack of management involvement may not be used to mitigate a civil penalty. Allowing mitigation in the latter case could encourage the lack of management involvement in licensed activities and a decrease in protection of the public health and safety.

1. Base Civil Penalty

The NRC imposes different levels of penalties for different severity level violations and different classes of licensees, contractors, and other persons. Tables 1A and 1B show the base civil penalties for various reactor, fuel cycle, and materials programs. (Civil penalties issued to individuals are determined on a case-by-case basis.) The structure of these tables generally takes into account the gravity of the violation as a primary consideration and the ability to pay as a secondary consideration. Generally, operations involving greater nuclear material inventories and greater potential consequences to the public and licensee employees receive higher civil penalties. Regarding the secondary factor of ability of various classes of licensees to pay the civil penalties, it is not the NRC's intention that the economic impact of a civil penalty be so severe that it puts a licensee out of business (orders, rather than civil penalties, are used when the intent is to suspend or terminate licensed activities) or adversely affects a licensee's ability to safely conduct licensed activities. The deterrent effect of civil penalties is best served when the amounts of the penalties take into account a licensee's ability to pay. In determining the amount of civil penalties for licensees for whom the tables do not reflect the ability to pay or the gravity of the violation, the NRC will consider as necessary an increase or decrease on a case-by-case basis. Normally, if a licensee can demonstrate financial hardship, the NRC will consider payments over time, including interest, rather than reducing the amount of the civil penalty. However, where a licensee claims financial hardship, the licensee will normally be required to address why it has sufficient resources to safely conduct licensed activities and pay license and inspection fees.

2. Civil Penalty Assessment

In an effort to (1) emphasize the importance of adherence to requirements and (2) reinforce prompt self-identification of problems and root causes and prompt and comprehensive correction of violations, the NRC reviews each proposed civil penalty on its own merits and, after considering all relevant circumstances, may adjust the base civil penalties shown in Table 1A and 1B for Severity Level I, II, and III violations as described below.

The civil penalty assessment process considers four decisional points: (a) Whether the licensee has had any previous escalated enforcement action (regardless of the activity area) during the past 2 years or past 2 inspections, whichever is longer; (b) whether the licensee should be given credit for actions related to identification; (c) whether the licensee's corrective actions are prompt and comprehensive; and (d) whether, in view of all the circumstances, the matter in question requires the exercise of discretion. Although each of these decisional points may have several associated

considerations for any given case, the outcome of the assessment process for each violation or problem, absent the exercise of discretion, is limited to one of the following three results: no civil penalty, a base civil penalty, or a base civil penalty escalated by 100%. The flow chart presented below is a graphic representation of the civil penalty assessment process.

BILLING CODE 7590–01–P

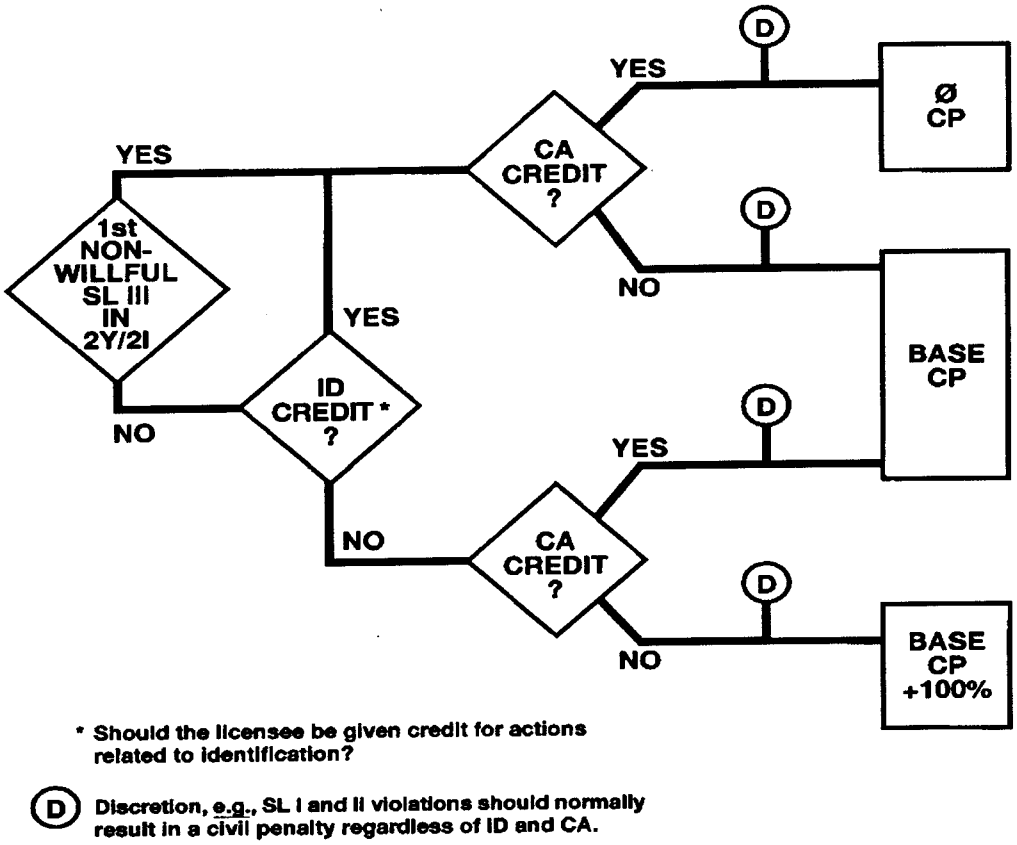

BILLING CODE 7590–01–C

a. Initial Escalated Action. When the NRC determines that a non-willful Severity Level III violation or problem has occurred, and the licensee has not had any previous escalated actions (regardless of the activity area) during the past 2 years or 2 inspections, whichever is longer, the NRC will consider whether the licensee's corrective action for the present violation or problem is reasonably prompt and comprehensive (see the discussion under Section VI.B.2.c, below). Using 2 years as the basis for assessment is expected to cover most situations, but considering a slightly longer or shorter period might be warranted based on the circumstances of a particular case. The starting point of this period should be considered the date when the licensee was put on notice of the need to take corrective action. For a licensee-identified violation or an event, this would be when the licensee is aware that a problem or violation exists requiring corrective action. For an NRC-identified violation, the starting point would be when the NRC puts the licensee on notice, which could be during the inspection, at the inspection exit meeting, or as part of post-inspection communication.

If the corrective action is judged to be prompt and comprehensive, a Notice of Violation normally should be issued with no associated civil penalty. If the corrective action is judged to be less than prompt and comprehensive, the Notice of Violation normally should be issued with a base civil penalty.

b. Credit for Actions Related to Identification. (1) If a Severity Level I or II violation or a willful Severity Level III violation has occurred—or if, during the past 2 years or 2 inspections, whichever is longer, the licensee has been issued at least one other escalated action—the civil penalty assessment should normally consider the factor of identification in addition to corrective action (see the discussion under Section VI.B.2.c, below). As to identification, the NRC should consider whether the licensee should be given credit for actions related to identification.

In each case, the decision should be focused on identification of the problem requiring corrective action. In other words, although giving credit for *Identification* and *Corrective Action* should be separate decisions, the concept of *Identification* presumes that the identifier recognizes the existence of a problem, and understands that corrective action is needed. The decision on *Identification* requires considering all the circumstances of identification including:

(i) Whether the problem requiring corrective action was NRC-identified, licensee-identified, or revealed through an event[8];

[8] An ''event,'' as used here, means (1) an event characterized by an active adverse impact on equipment or personnel, readily obvious by human observation or instrumentation, or (2) a radiological impact on personnel or the environment in excess of regulatory limits, such as an overexposure, a release of radioactive material above NRC limits, or a loss of radioactive material. For example, an equipment failure discovered through a spill of liquid, a loud noise, the failure to have a system

(ii) Whether prior opportunities existed to identify the problem requiring corrective action, and if so, the age and number of those opportunities;

(iii) Whether the problem was revealed as the result of a licensee self-monitoring effort, such as conducting an audit, a test, a surveillance, a design review, or troubleshooting;

(iv) For a problem revealed through an event, the ease of discovery, and the degree of licensee initiative in identifying the root cause of the problem and any associated violations;

(v) For NRC-identified issues, whether the licensee would likely have identified the issue in the same time-period if the NRC had not been involved;

(vi) For NRC-identified issues, whether the licensee should have identified the issue (and taken action) earlier; and

(vii) For cases in which the NRC identifies the overall problem requiring corrective action (e.g., a programmatic issue), the degree of licensee initiative or lack of initiative in identifying the problem or problems requiring corrective action.

(2) Although some cases may consider all of the above factors, the importance of each factor will vary based on the type of case as discussed in the following general guidance:

(i) Licensee-Identified. When a problem requiring corrective action is licensee-identified (i.e., identified before the problem has resulted in an event), the NRC should normally give the licensee credit for actions related to identification, regardless of whether prior opportunities existed to identify the problem.

(ii) Identified Through an Event. When a problem requiring corrective action is identified through an event, the decision on whether to give the licensee credit for actions related to identification normally should consider the ease of discovery, whether the event occurred as the result of a licensee self-monitoring effort (i.e., whether the licensee was ''looking for the problem''), the degree of licensee initiative in identifying the problem or problems requiring corrective action, and whether prior opportunities existed to identify the problem.

Any of these considerations may be overriding if particularly noteworthy or particularly egregious. For example, if the event occurred as the result of conducting a surveillance or similar self-monitoring effort (i.e., the licensee was looking for the problem), the licensee should normally be given credit for identification. As a second instance, even if the problem was easily discovered (e.g., revealed by a large spill of liquid), the NRC may choose to give credit because noteworthy licensee effort was exerted in ferreting out the root cause and associated violations, or simply because no prior opportunities (e.g., procedural cautions, post-maintenance testing, quality control failures, readily observable parameter trends, or repeated or locked-in annunciator warnings) existed to identify the problem.

(iii) NRC-Identified. When a problem requiring corrective action is NRC-identified, the decision on whether to give the licensee credit for actions related to *Identification* should normally be based on an additional question: should the licensee have reasonably identified the problem (and taken action) earlier?

In most cases, this reasoning may be based simply on the ease of the NRC inspector's discovery (e.g., conducting a walkdown, observing in the control room, performing a confirmatory NRC radiation survey, hearing a cavitating pump, or finding a valve obviously out of position). In some cases, the licensee's missed opportunities to identify the problem might include a similar previous violation, NRC or industry notices, internal audits, or readily observable trends.

If the NRC identifies the violation but concludes that, under the circumstances, the licensee's actions related to *Identification* were not unreasonable, the matter would be treated as licensee-identified for purposes of assessing the civil penalty. In such cases, the question of *Identification* credit shifts to whether the licensee should be penalized for NRC's identification of the problem.

(iv) Mixed Identification. For ''mixed'' identification situations (i.e., where multiple violations exist, some NRC-identified, some licensee-identified, or where the NRC prompted the licensee to take action that resulted in the identification of the violation), the NRC's evaluation should normally determine whether the licensee could reasonably have been expected to identify the violation in the NRC's absence. This determination should consider, among other things, the timing of the NRC's discovery, the information available to the licensee that caused the NRC concern, the specificity of the NRC's concern, the scope of the licensee's efforts, the level of licensee resources given to the investigation, and whether the NRC's path of analysis had been dismissed or was being pursued in parallel by the licensee.

In some cases, the licensee may have addressed the isolated symptoms of each violation (and may have identified the violations), but failed to recognize the common root cause and taken the necessary comprehensive action. Where this is true, the decision on whether to give licensee credit for actions related to *Identification* should focus on identification of *the problem requiring corrective action* (e.g., the programmatic breakdown). As such, depending on the chronology of the various violations, the earliest of the individual violations might be considered missed opportunities for the licensee to have identified the larger problem.

(v) Missed Opportunities to Identify. Missed opportunities include prior notifications or missed opportunities to identify or prevent violations such as (1) through normal surveillances, audits, or quality assurance (QA) activities; (2) through prior notice, i.e., specific NRC or industry notification; or (3) through other reasonable indication of a potential problem or violation, such as observations of employees and contractors, and failure to take effective corrective steps. It may include findings of the NRC, the licensee, or industry made at other facilities operated by the licensee where it is reasonable to expect the licensee to take action to identify or prevent similar problems at the facility subject to the enforcement action at issue. In assessing this factor, consideration will be given to, among other things, the opportunities available to discover the violation, the ease of discovery, the similarity between the violation and the notification, the period of time between when the violation occurred and when the notification was issued, the action taken (or planned) by the licensee in response to the notification, and the level of management review that the notification received (or should have received).

The evaluation of missed opportunities should normally depend on whether the information available to the licensee should reasonably have caused action that would have prevented the violation. Missed opportunities is normally not applied where the licensee appropriately reviewed the opportunity for application to its activities and reasonable action was either taken or

respond properly, or an annunciator alarm would be considered an event; a system discovered to be inoperable through a document review would not. Similarly, if a licensee discovered, through quarterly dosimetry readings, that employees had been inadequately monitored for radiation, the issue would normally be considered licensee-identified; however, if the same dosimetry readings disclosed an overexposure, the issue would be considered an event.

planned to be taken within a reasonable time.

In some situations the missed opportunity is a violation in itself. In these cases, unless the missed opportunity is a Severity Level III violation in itself, the missed opportunity violation may be grouped with the other violations into a single Severity Level III ''problem.'' However, if the missed opportunity is the *only* violation, then it should not normally be counted twice (i.e., both as the violation and as a missed opportunity—''double counting'') unless the number of opportunities missed was particularly significant.

The timing of the missed opportunity should also be considered. While a rigid time-frame is unnecessary, a 2-year period should generally be considered for consistency in implementation, as the period reflecting relatively current performance.

(3) When the NRC determines that the licensee should receive credit for actions related to *Identification* the civil penalty assessment should normally result in either no civil penalty or a base civil penalty, based on whether *Corrective Action* is judged to be reasonably prompt and comprehensive. When the licensee is *not* given credit for actions related to *Identification* the civil penalty assessment should normally result in a Notice of Violation with either a base civil penalty or a base civil penalty escalated by 100%, depending on the quality of *Corrective Action*, because the licensee's performance is clearly not acceptable.

c. Credit for Prompt and Comprehensive Corrective Action. The purpose of the *Corrective Action* factor is to encourage licensees to (1) take the immediate actions necessary upon discovery of a violation that will restore safety and compliance with the license, regulation(s), or other requirement(s); and (2) develop and implement (in a timely manner) the lasting actions that will not only prevent recurrence of the violation at issue, but will be appropriately comprehensive, given the significance and complexity of the violation, to prevent occurrence of violations with similar root causes.

Regardless of other circumstances (e.g., past enforcement history, identification), the licensee's corrective actions should always be evaluated as part of the civil penalty assessment process. As a reflection of the importance given to this factor, an NRC judgment that the licensee's corrective action has not been prompt and comprehensive will always result in issuing at least a base civil penalty.

In assessing this factor, consideration will be given to the timeliness of the corrective action (including the promptness in developing the schedule for long term corrective action), the adequacy of the licensee's root cause analysis for the violation, and, given the significance and complexity of the issue, the comprehensiveness of the corrective action (i.e., whether the action is focused narrowly to the specific violation or broadly to the general area of concern). Even in cases when the NRC, at the time of the enforcement conference, identifies additional peripheral or minor corrective action still to be taken, the licensee may be given credit in this area, as long as the licensee's actions addressed the underlying root cause and are considered sufficient to prevent recurrence of the violation and similar violations.

Normally, the judgment of the adequacy of corrective actions will hinge on whether the NRC had to take action to focus the licensee's evaluative and corrective process in order to obtain comprehensive corrective action. This will normally be judged at the time of the predecisional enforcement conference (e.g., by outlining substantive additional areas where corrective action is needed). Earlier informal discussions between the licensee and NRC inspectors or management may result in improved corrective action, but should not normally be a basis to deny credit for *Corrective Action*. For cases in which the licensee does not get credit for actions related to *Identification* because the NRC identified the problem, the assessment of the licensee's corrective action should begin from the time when the NRC put the licensee on notice of the problem. Notwithstanding eventual good comprehensive corrective action, if immediate corrective action was not taken to restore safety and compliance once the violation was identified, corrective action would not be considered prompt and comprehensive.

Corrective action for violations involving discrimination should normally only be considered comprehensive if the licensee takes prompt, comprehensive corrective action that (1) addresses the broader environment for raising safety concerns in the workplace, and (2) provides a remedy for the particular discrimination at issue.

In response to violations of 10 CFR 50.59, corrective action should normally be considered prompt and comprehensive only if the licensee:

(i) Makes a prompt decision on operability; and either

(ii) Makes a prompt evaluation under 10 CFR 50.59 if the licensee intends to maintain the facility or procedure in the as found condition; or

(iii) Promptly initiates corrective action consistent with Criterion XVI of 10 CFR 50, Appendix B, if it intends to restore the facility or procedure to the FSAR description.

d. Exercise of Discretion. As provided in Section VII, ''Exercise of Discretion,'' discretion may be exercised by either escalating or mitigating the amount of the civil penalty determined after applying the civil penalty adjustment factors to ensure that the proposed civil penalty reflects the NRC's concern regarding the violation at issue and that it conveys the appropriate message to the licensee. However, in no instance will a civil penalty for any one violation exceed $110,000 per day.

TABLE 1A—BASE CIVIL PENALTIES

a. Power reactors and gaseous diffusion plants.....	$110,000
b. Fuel fabricators, industrial processors,[1] and independent spent fuel and monitored retrievable storage installations.....	27,500
c. Test reactors, mills and uranium conversion facilities, contractors, waste disposal licensees, industrial radiographers, and other large material users..... ..	11,000
d. Research reactors, academic, medical, or other small material users[2].....	5,500

[1] Large firms engaged in manufacturing or distribution of byproduct, source, or special nuclear material.

[2] This applies to nonprofit institutions not otherwise categorized in this table, mobile nuclear services, nuclear pharmacies, and physician offices.

TABLE 1B—BASE CIVIL PENALTIES

[In percent]

Severity level	Base civil penalty amount [1]
I	100
II	80
III	50

[1] Percent of amount listed in Table 1A.

C. Orders

An order is a written NRC directive to modify, suspend, or revoke a license; to cease and desist from a given practice or activity; or to take such other action as may be proper (see 10 CFR 2.202). Orders may also be issued in lieu of, or in addition to, civil penalties, as appropriate for Severity Level I, II, or III

violations. Orders may be issued as follows:

1. License Modification orders are issued when some change in licensee equipment, procedures, personnel, or management controls is necessary.

2. Suspension Orders may be used:

(a) To remove a threat to the public health and safety, common defense and security, or the environment;

(b) To stop facility construction when,

(i) Further work could preclude or significantly hinder the identification or correction of an improperly constructed safety-related system or component; or

(ii) The licensee's quality assurance program implementation is not adequate to provide confidence that construction activities are being properly carried out;

(c) When the licensee has not responded adequately to other enforcement action;

(d) When the licensee interferes with the conduct of an inspection or investigation; or

(e) For any reason not mentioned above for which license revocation is legally authorized.

Suspensions may apply to all or part of the licensed activity. Ordinarily, a licensed activity is not suspended (nor is a suspension prolonged) for failure to comply with requirements where such failure is not willful and adequate corrective action has been taken.

3. Revocation Orders may be used:

(a) When a licensee is unable or unwilling to comply with NRC requirements;

(b) When a licensee refuses to correct a violation;

(c) When licensee does not respond to a Notice of Violation where a response was required;

(d) When a licensee refuses to pay an applicable fee under the Commission's regulations; or

(e) For any other reason for which revocation is authorized under section 186 of the Atomic Energy Act (e.g., any condition which would warrant refusal of a license on an original application).

4. Cease and Desist Orders may be used to stop an unauthorized activity that has continued after notification by the NRC that the activity is unauthorized.

5. Orders to non-licensees, including contractors and subcontractors, holders of NRC approvals, e.g., certificates of compliance, early site permits, standard design certificates, or applicants for any of them, and to employees of any of the foregoing, are used when the NRC has identified deliberate misconduct that may cause a licensee to be in violation of an NRC requirement or where incomplete or inaccurate information is deliberately submitted or where the NRC loses its reasonable assurance that the licensee will meet NRC requirements with that person involved in licensed activities.

Unless a separate response is warranted pursuant to 10 CFR 2.201, a Notice of Violation need not be issued where an order is based on violations described in the order. The violations described in an order need not be categorized by severity level.

Orders are made effective immediately, without prior opportunity for hearing, whenever it is determined that the public health, interest, or safety so requires, or when the order is responding to a violation involving willfulness. Otherwise, a prior opportunity for a hearing on the order is afforded. For cases in which the NRC believes a basis could reasonably exist for not taking the action as proposed, the licensee will ordinarily be afforded an opportunity to show why the order should not be issued in the proposed manner by way of a Demand for Information. (See 10 CFR 2.204)

D. Related Administrative Actions. In addition to the formal enforcement actions, Notices of Violation, civil penalties, and orders, the NRC also uses administrative actions, such as Notices of Deviation, Notices of Nonconformance, Confirmatory Action Letters, Letters of Reprimand, and Demands for Information to supplement its enforcement program. The NRC expects licensees and contractors to adhere to any obligations and commitments resulting from these actions and will not hesitate to issue appropriate orders to ensure that these obligations and commitments are met.

1. Notices of Deviation are written notices describing a licensee's failure to satisfy a commitment where the commitment involved has not been made a legally binding requirement. A Notice of Deviation requests a licensee to provide a written explanation or statement describing corrective steps taken (or planned), the results achieved, and the date when corrective action will be completed.

2. Notices of Nonconformance are written notices describing contractors' failures to meet commitments which have not been made legally binding requirements by NRC. An example is a commitment made in a procurement contract with a licensee as required by 10 CFR Part 50, Appendix B. Notices of Nonconformances request non-licensees to provide written explanations or statements describing corrective steps (taken or planned), the results achieved, the dates when corrective actions will be completed, and measures taken to preclude recurrence.

3. Confirmatory Action Letters are letters confirming a licensee's or contractor's agreement to take certain actions to remove significant concerns about health and safety, safeguards, or the environment.

4. Letters of Reprimand are letters addressed to individuals subject to Commission jurisdiction identifying a significant deficiency in their performance of licensed activities.

5. Demands for Information are demands for information from licensees or other persons for the purpose of enabling the NRC to determine whether an order or other enforcement action should be issued.

VII. Exercise of Discretion

Notwithstanding the normal guidance contained in this policy, as provided in Section III, ''Responsibilities,'' the NRC may choose to exercise discretion and either escalate or mitigate enforcement sanctions within the Commission's statutory authority to ensure that the resulting enforcement action appropriately reflects the level of NRC concern regarding the violation at issue and conveys the appropriate message to the licensee.

A. Escalation of Enforcement Sanctions

The NRC considers violations categorized at Severity Level I, II, or III to be of significant regulatory concern. If the application of the normal guidance in this policy does not result in an appropriate sanction, with the approval of the Deputy Executive Director and consultation with the EDO and Commission, as warranted, the NRC may apply its full enforcement authority where the action is warranted. NRC action may include (1) escalating civil penalties, (2) issuing appropriate orders, and (3) assessing civil penalties for continuing violations on a per day basis, up to the statutory limit of $110,000 per violation, per day.

1. *Civil penalties.* Notwithstanding the outcome of the normal civil penalty assessment process addressed in Section VI.B, the NRC may exercise discretion by either proposing a civil penalty where application of the factors would otherwise result in zero penalty or by escalating the amount of the resulting civil penalty (i.e., base or twice the base civil penalty) to ensure that the proposed civil penalty reflects the significance of the circumstances and conveys the appropriate regulatory message to the licensee. The Commission will be notified if the deviation in the amount of the civil penalty proposed under this discretion from the amount of the civil penalty assessed under the normal process is

more than two times the base civil penalty shown in Tables 1A and 1B. Examples when this discretion should be considered include, but are not limited to the following:

(a) Problems categorized at Severity Level I or II;

(b) Overexposures, or releases of radiological material in excess of NRC requirements;

(c) Situations involving particularly poor licensee performance, or involving willfulness;

(d) Situations when the licensee's previous enforcement history has been particularly poor, or when the current violation is directly repetitive of an earlier violation;

(e) Situations when the violation results in a substantial increase in risk, including cases in which the duration of the violation has contributed to the substantial increase;

(f) Situations when the licensee made a conscious decision to be in noncompliance in order to obtain an economic benefit;

(g) Cases involving the loss of a source. In addition, unless the licensee self-identifies and reports the loss to the NRC, these cases should normally result in a civil penalty in an amount at least in the order of the cost of an authorized disposal of the material or of the transfer of the material to an authorized recipient; or

(h) Severity Level II or III violations associated with departures from the Final Safety Analysis Report identified after two years from October 18, 1996. Such a violation or problem would consider the number and nature of the violations, the severity of the violations, whether the violations were continuing, and who identified the violations (and if the licensee identified the violation, whether exercise of Section VII.B.3 enforcement discretion is warranted).

2. *Orders.* The NRC may, where necessary or desirable, issues orders in conjunction with or in lieu of civil penalties to achieve or formalize corrective actions and to deter further recurrence of serious violations.

3. *Daily civil penalties.* In order to recognize the added technical safety significance or regulatory significance for those cases where a very strong message is warranted for a significant violation that continues for more than one day, the NRC may exercise discretion and assess a separate violation and attendant civil penalty up to the statutory limit of $110,000 for each day the violation continues. The NRC may exercise this discretion if a licensee was aware or clearly should have been aware of a violation, or if the licensee had an opportunity to identify and correct the violation but failed to do so.

B. Mitigation of Enforcement Sanctions

The NRC may exercise discretion and refrain from issuing a civil penalty and/or a Notice of Violation, if the outcome of the normal process described in Sections VI.A and VI.B does not result in a sanction consistent with an appropriate regulatory message. In addition, even if the NRC exercises this discretion, when the licensee failed to make a required report to the NRC, a separate enforcement action will normally be issued for the licensee's failure to make a required report. The approval of the Director, Office of Enforcement, with consultation with the Deputy Executive Director as warranted, is required for exercising discretion of the type described in Section VII.B.1.b where a willful violation is involved, and of the types described in Sections VII.B.2 through VII.B.6. Commission notification is required for exercising discretion of the type described in: (1) Section VII.B.2 the first time discretion is exercised during that plant shutdown, and (2) Section VII.B.6 where appropriate based on the uniqueness or significance of the issue. Examples when discretion should be considered for departing from the normal approach in Sections VI.A and VI.B include, but are not limited to the following:

1. *Licensee-Identified Severity Level IV Violations.* The NRC, with the approval of the Regional Administrator or his or her designee, may refrain from issuing a Notice of Violation for a Severity Level IV violation that is documented in an inspection report (or official field notes for some material cases) and described therein as a Non-Cited Violation (NCV) provided that the inspection report includes a brief description of the corrective action and that the violation meets all of the following criteria:

(a) It was identified by the licensee; [9]

(b) It was not a violation that could reasonably be expected to have been prevented by the licensee's corrective action for a previous violation or a previous licensee finding that occurred within the past 2 years of the inspection at issue, or the period within the last two inspections, whichever is longer;

(c) It was or will be corrected within a reasonable time, by specific corrective action committed to by the licensee by the end of the inspection, including immediate corrective action and comprehensive corrective action to prevent recurrence;

(d) It was not a willful violation or if it was a willful violation;

(i) The information concerning the violation, if not required to be reported, was promptly provided to appropriate NRC personnel, such as a resident inspector or regional section or branch chief;

(ii) The violation involved the acts of a low-level individual (and not a licensee official as defined in Section IV.C);

(iii) The violation appears to be the isolated action of the employee without management involvement and the violation was not caused by lack of management oversight as evidenced by either a history of isolated willful violations or a lack of adequate audits or supervision of employees; and

(iv) Significant remedial action commensurate with the circumstances was taken by the licensee such that it demonstrated the seriousness of the violation to other employees and contractors, thereby creating a deterrent effect within the licensee's organization. Although removal of the employee from licensed activities is not necessarily required, substantial disciplinary action is expected.

2. *Violations Identified During Extended Shutdowns or Work Stoppages.* The NRC may refrain from issuing a Notice of Violation or a proposed civil penalty for a violation that is identified after (i) the NRC has taken significant enforcement action based upon a major safety event contributing to an extended shutdown of an operating reactor or a material licensee (or a work stoppage at a construction site), or (ii) the licensee enters an extended shutdown or work stoppage related to generally poor performance over a long period of time, provided that the violation is documented in an inspection report (or official field notes for some material cases) and that it meets all of the following criteria:

(a) It was either licensee-identified as a result of a comprehensive program for problem identification and correction that was developed in response to the shutdown or identified as a result of an employee allegation to the licensee; (If the NRC identifies the violation and all of the other criteria are met, the NRC should determine whether enforcement action is necessary to achieve remedial action, or if discretion may still be appropriate.)

[9] Discretion is not warranted when a licensee identifies a violation as a result of an event where the root cause of the event is obvious or the licensee had prior opportunity to identify the problem but failed to take action that would have prevented the event. Discretion may be warranted if the licensee demonstrated initiative in identifying the violation's root cause.

(b) It is based upon activities of the licensee prior to the events leading to the shutdown;

(c) It would not be categorized at Severity Level I;

(d) It was not willful; and

(e) The licensee's decision to restart the plant requires NRC concurrence.

3. *Violations Involving Old Design Issues.* The NRC may refrain from proposing a civil penalty for a Severity Level II or III violation involving a past problem, such as in engineering, design, or installation, provided that the violation is documented in an inspection report (or official field notes for some material cases) that includes a description of the corrective action and that it meets all of the following criteria:

(a) It was a licensee-identified as a result of its voluntary initiative;

(b) It was or will be corrected, including immediate corrective action and long term comprehensive corrective action to prevent recurrence, within a reasonable time following identification (this action should involve expanding the initiative, as necessary, to identify other failures caused by similar root causes); and

(c) It was not likely to be identified (after the violation occurred) by routine licensee efforts such as normal surveillance or quality assurance (QA) activities.

In addition, the NRC may refrain from issuing a Notice of Violation for a Severity Level II, III, or IV violation that meets the above criteria provided the violation was caused by conduct that is not reasonably linked to present performance (normally, violations that are at least 3 years old or violations occurring during plant construction) and there had not been prior notice so that the licensee should have reasonably identified the violation earlier. This exercise of discretion is to place a premium on licensees initiating efforts to identify and correct subtle violations that are not likely to be identified by routine efforts before degraded safety systems are called upon to work.

Section VII.B.3 discretion would not normally be applied to departures from the FSAR if:

(a) The NRC identifies the violation unless it was likely in the staff's view that the licensee would have identified the violation in light of the defined scope, thoroughness, and schedule of the licensee's initiative (provided the schedule provides for completion of the licensee's initiative within two years after October 18, 1996;

(b) The licensee identifies the violation as a result of an event or surveillance or other required testing where required corrective action identifies the FSAR issue;

(c) The licensee identifies the violation but had prior opportunities to do so (was aware of the departure from the FSAR) and failed to correct it earlier;

(d) There is willfulness associated with the violation;

(e) The licensee fails to make a report required by the identification of the departure from the FSAR; or

(f) The licensee either fails to take comprehensive corrective action or fails to appropriately expand the corrective action program. The corrective action should be broad with a defined scope and schedule.

4. *Violations Identified Due to Previous Enforcement Action.* The NRC may refrain from issuing a Notice of Violation or a proposed civil penalty for a violation that is identified after the NRC has taken enforcement action, provided that the violation is documented in an inspection report (or official field notes for some material cases) that includes a description of the corrective action and that it meets all of the following criteria:

(a) It was licensee-identified as part of the corrective action for the previous enforcement action;

(b) It has the same or similar root cause as the violation for which enforcement action was issued;

(c) It does not substantially change the safety significance or the character of the regulatory concern arising out of the initial violation; and

(d) It was or will be corrected, including immediate corrective action and long term comprehensive corrective action to prevent recurrence, within a reasonable time following identification.

(e) It would not be categorized at Severity Level I;

5. *Violations Involving Certain Discrimination Issues.* Enforcement discretion may be exercised for discrimination cases when a licensee who, without the need for government intervention, identifies an issue of discrimination and takes prompt, comprehensive, and effective corrective action to address both the particular situation and the overall work environment for raising safety concerns. Similarly, enforcement may not be warranted where a complaint is filed with the Department of Labor (DOL) under Section 211 of the Energy Reorganization Act of 1974, as amended, but the licensee settles the matter before the DOL makes an initial finding of discrimination and addresses the overall work environment. Alternatively, if a finding of discrimination is made, the licensee may choose to settle the case before the evidentiary hearing begins. In such cases, the NRC may exercise its discretion not to take enforcement action when the licensee has addressed the overall work environment for raising safety concerns and has publicized that a complaint of discrimination for engaging in protected activity was made to the DOL, that the matter was settled to the satisfaction of the employee (the terms of the specific settlement agreement need not be posted), and that, if the DOL Area Office found discrimination, the licensee has taken action to positively reemphasize that discrimination will not be tolerated. Similarly, the NRC may refrain from taking enforcement action if a licensee settles a matter promptly after a person comes to the NRC without going to the DOL. Such discretion would normally not be exercised in cases in which the licensee does not appropriately address the overall work environment (*e.g.*, by using training, postings, revised policies or procedures, any necessary disciplinary action, etc., to communicate its policy against discrimination) or in cases that involve: allegations of discrimination as a result of providing information directly to the NRC, allegations of discrimination caused by a manager above first-line supervisor (consistent with current Enforcement Policy classification of Severity Level I or II violations), allegations of discrimination where a history of findings of discrimination (by the DOL or the NRC) or settlements suggests a programmatic rather than an isolated discrimination problem, or allegations of discrimination which appear particularly blatant or egregious.

6. *Violations Involving Special Circumstances.* Notwithstanding the outcome of the normal enforcement process addressed in Section VI.A or the normal civil penalty assessment process addressed in Section VI.B, the NRC may reduce or refrain from issuing a civil penalty or a Notice of Violation for a Severity Level II, III, or IV violation based on the merits of the case after considering the guidance in this statement of policy and such factors as the age of the violation, the technical and regulatory significance of the violation, the clarity of the requirement, the appropriateness of the requirement, the overall sustained performance of the licensee has been particularly good, and other relevant circumstances, including any that may have changed since the violation. This discretion is expected to be exercised only where application of the normal guidance in the policy is unwarranted. In addition, the NRC may refrain from issuing enforcement action

for violations resulting from matters not within a licensee's control, such as equipment failures that were not avoidable by reasonable licensee quality assurance measures or management controls. Generally, however, licensees are held responsible for the acts of their employees and contractors. Accordingly, this policy should not be construed to excuse personnel or contractor errors.

C. Exercise of Discretion for an Operating Facility

On occasion, circumstances may arise where a licensee's compliance with a Technical Specification (TS) Limiting Condition for Operation or with other license conditions would involve an unnecessary plant transient or performance of testing, inspection, or system realignment that is inappropriate with the specific plant conditions, or unnecessary delays in plant startup without a corresponding health and safety benefit. In these circumstances, the NRC staff may choose not to enforce the applicable TS or other license condition. This enforcement discretion, designated as a Notice of Enforcement Discretion (NOED), will only be exercised if the NRC staff is clearly satisfied that the action is consistent with protecting the public health and safety. A licensee seeking the issuance of a NOED must provide a written justification, or in circumstances where good cause is shown, oral justification followed as soon as possible by written justification, which documents the safety basis for the request and provides whatever other information the NRC staff deems necessary in making a decision on whether or not to issue a NOED.

The appropriate Regional Administrator, or his or her designee, may issue a NOED where the noncompliance is temporary and nonrecurring when an amendment is not practical. The Director, Office of Nuclear Reactor Regulation, or his or her designee, may issue a NOED if the expected noncompliance will occur during the brief period of time it requires the NRC staff to process an emergency or exigent license amendment under the provisions of 10 CFR 50.91(a)(5) or (6). The person exercising enforcement discretion will document the decision.

For an operating plant, this exercise of enforcement discretion is intended to minimize the potential safety consequences of unnecessary plant transients with the accompanying operational risks and impacts or to eliminate testing, inspection, or system realignment which is inappropriate for the particular plant conditions. For plants in a shutdown condition, exercising enforcement discretion is intended to reduce shutdown risk by, again, avoiding testing, inspection or system realignment which is inappropriate for the particular plant conditions, in that, it does not provide a safety benefit or may, in fact, be detrimental to safety in the particular plant condition. Exercising enforcement discretion for plants attempting to startup is less likely than exercising it for an operating plant, as simply delaying startup does not usually leave the plant in a condition in which it could experience undesirable transients. In such cases, the Commission would expect that discretion would be exercised with respect to equipment or systems only when it has at least concluded that, notwithstanding the conditions of the license: (1) The equipment or system does not perform a safety function in the mode in which operation is to occur; (2) the safety function performed by the equipment or system is of only marginal safety benefit, provided remaining in the current mode increases the likelihood of an unnecessary plant transient; or (3) the TS or other license condition requires a test, inspection or system realignment that is inappropriate for the particular plant conditions, in that it does not provide a safety benefit, or may, in fact, be detrimental to safety in the particular plant condition.

The decision to exercise enforcement discretion does not change the fact that a violation will occur nor does it imply that enforcement discretion is being exercised for any violation that may have led to the violation at issue. In each case where the NRC staff has chosen to issue a NOED, enforcement action will normally be taken for the root causes, to the extent violations were involved, that led to the noncompliance for which enforcement discretion was used. The enforcement action is intended to emphasize that licensees should not rely on the NRC's authority to exercise enforcement discretion as a routine substitute for compliance or for requesting a license amendment.

Finally, it is expected that the NRC staff will exercise enforcement discretion in this area infrequently. Although a plant must shut down, refueling activities may be suspended, or plant startup may be delayed, absent the exercise of enforcement discretion, the NRC staff is under no obligation to take such a step merely because it has been requested. The decision to forego enforcement is discretionary. When enforcement discretion is to be exercised, it is to be exercised only if the NRC staff is clearly satisfied that such action is warranted from a health and safety perspective.

VIII. Enforcement Actions Involving Individuals

Enforcement actions involving individuals, including licensed operators, are significant personnel actions, which will be closely controlled and judiciously applied. An enforcement action involving an individual will normally be taken only when the NRC is satisfied that the individual fully understood, or should have understood, his or her responsibility; knew, or should have known, the required actions; and knowingly, or with careless disregard (i.e., with more than mere negligence) failed to take required actions which have actual or potential safety significance. Most transgressions of individuals at the level of Severity Level III or IV violations will be handled by citing only the facility licensee.

More serious violations, including those involving the integrity of an individual (e.g., lying to the NRC) concerning matters within the scope of the individual's responsibilities, will be considered for enforcement action against the individual as well as against the facility licensee. Action against the individual, however, will not be taken if the improper action by the individual was caused by management failures. The following examples of situations illustrate this concept:

- Inadvertent individual mistakes resulting from inadequate training or guidance provided by the facility licensee.
- Inadvertently missing an insignificant procedural requirement when the action is routine, fairly uncomplicated, and there is no unusual circumstance indicating that the procedures should be referred to and followed step-by-step.
- Compliance with an express direction of management, such as the Shift Supervisor or Plant Manager, resulted in a violation unless the individual did not express his or her concern or objection to the direction.
- Individual error directly resulting from following the technical advice of an expert unless the advise was clearly unreasonable and the licensed individual should have recognized it as such.
- Violations resulting from inadequate procedures unless the individual used a faulty procedure knowing it was faulty and had not attempted to get the procedure corrected.

Listed below are examples of situations which could result in enforcement actions involving individuals, licensed or unlicensed. If the actions described in these examples are taken by a licensed operator or taken deliberately by an unlicensed individual, enforcement action may be taken directly against the individual. However, violations involving willful conduct not amounting to deliberate action by an unlicensed individual in these situations may result in enforcement action against a licensee that may impact an individual. The situations include, but are not limited to, violations that involve:

- Willfully causing a licensee to be in violation of NRC requirements.
- Willfully taking action that would have caused a licensee to be in violation of NRC requirements but the action did not do so because it was detected and corrective action was taken.
- Recognizing a violation of procedural requirements and willfully not taking corrective action.
- Willfully defeating alarms which have safety significance.
- Unauthorized abandoning of reactor controls.
- Dereliction of duty.
- Falsifying records required by NRC regulations or by the facility license.
- Willfully providing, or causing a licensee to provide, an NRC inspector or investigator with inaccurate or incomplete information on a matter material to the NRC.
- Willfully withholding safety significant information rather than making such information known to appropriate supervisory or technical personnel in the licensee's organization.
- Submitting false information and as a result gaining unescorted access to a nuclear power plant.
- Willfully providing false data to a licensee by a contractor or other person who provides test or other services, when the data affects the licensee's compliance with 10 CFR Part 50, Appendix B, or other regulatory requirement.
- Willfully providing false certification that components meet the requirements of their intended use, such as ASME Code.
- Willfully supplying, by contractors of equipment for transportation of radioactive material, casks that do not comply with their certificates of compliance.
- Willfully performing unauthorized bypassing of required reactor or other facility safety systems.
- Willfully taking actions that violate Technical Specification Limiting Conditions for Operation or other license conditions (enforcement action for a willful violation will not be taken if that violation is the result of action taken following the NRC's decision to forego enforcement of the Technical Specification or other license condition or if the operator meets the requirements of 10 CFR 50.54 (x), (i.e., unless the operator acted unreasonably considering all the relevant circumstances surrounding the emergency).

Normally, some enforcement action is taken against a licensee for violations caused by significant acts of wrongdoing by its employees, contractors, or contractors' employees. In deciding whether to issue an enforcement action to an unlicensed person as well as to the licensee, the NRC recognizes that judgments will have to be made on a case by case basis. In making these decisions, the NRC will consider factors such as the following:

1. The level of the individual within the organization.
2. The individual's training and experience as well as knowledge of the potential consequences of the wrongdoing.
3. The safety consequences of the misconduct.
4. The benefit to the wrongdoer, e.g., personal or corporate gain.
5. The degree of supervision of the individual, i.e., how closely is the individual monitored or audited, and the likelihood of detection (such as a radiographer working independently in the field as contrasted with a team activity at a power plant).
6. The employer's response, e.g., disciplinary action taken.
7. The attitude of the wrongdoer, e.g., admission of wrongdoing, acceptance of responsibility.
8. The degree of management responsibility or culpability.
9. Who identified the misconduct.

Any proposed enforcement action involving individuals must be issued with the concurrence of the Deputy Executive Director. The particular sanction to be used should be determined on a case-by-case basis.[10] Notices of Violation and Orders are examples of enforcement actions that may be appropriate against individuals. The administrative action of a Letter of Reprimand may also be considered. In addition, the NRC may issue Demands for Information to gather information to enable it to determine whether an order or other enforcement action should be issued.

Orders to NRC-licensed reactor operators may involve suspension for a specified period, modification, or revocation of their individual licenses. Orders to unlicensed individuals might include provisions that would:

- Prohibit involvement in NRC licensed activities for a specified period of time (normally the period of suspension would not exceed 5 years) or until certain conditions are satisfied, e.g., completing specified training or meeting certain qualifications.
- Require notification to the NRC before resuming work in licensed activities.
- Require the person to tell a prospective employer or customer engaged in licensed activities that the person has been subject to an NRC order.

In the case of a licensed operator's failure to meet applicable fitness-for-duty requirements (10 CFR 55.53(j)), the NRC may issue a Notice of Violation or a civil penalty to the Part 55 licensee, or an order to suspend, modify, or revoke the Part 55 license. These actions may be taken the first time a licensed operator fails a drug or alcohol test, that is, receives a confirmed positive test that exceeds the cutoff levels of 10 CFR Part 26 or the facility licensee's cutoff levels, if lower. However, normally only a Notice of Violation will be issued for the first confirmed positive test in the absence of aggravating circumstances such as errors in the performance of licensed duties or evidence of prolonged use. In addition, the NRC intends to issue an order to suspend the Part 55 license for up to 3 years the second time a licensed operator exceeds those cutoff levels. In the event there are less than 3 years remaining in the term of the individual's license, the NRC may consider not renewing the individual's license or not issuing a new license after the three year period is completed. The NRC intends to issue an order to revoke the Part 55 license the third time a licensed operator exceeds those cutoff levels. A licensed operator or applicant who refuses to participate in the drug and alcohol testing programs established by the facility licensee or who is involved in the sale, use, or possession of an illegal drug is also subject to license suspension, revocation, or denial.

[10] Except for individuals subject to civil penalties under section 206 of the Energy Reorganization Act of 1974, as amended, NRC will not normally impose a civil penalty against an individual. However, section 234 of the Atomic Energy Act (AEA) gives the Commission authority to impose civil penalties on ''any person.'' ''Person'' is broadly defined in Section 11s of the AEA to include individuals, a variety of organizations, and any representatives or agents. This gives the Commission authority to impose civil penalties on employees of licensees or on separate entities when a violation of a requirement directly imposed on them is committed.

In addition, the NRC may take enforcement action against a licensee that may impact an individual, where the conduct of the individual places in question the NRC's reasonable assurance that licensed activities will be properly conducted. The NRC may take enforcement action for reasons that would warrant refusal to issue a license on an original application. Accordingly, appropriate enforcement actions may be taken regarding matters that raise issues of integrity, competence, fitness-for-duty, or other matters that may not necessarily be a violation of specific Commission requirements.

In the case of an unlicensed person, whether a firm or an individual, an order modifying the facility license may be issued to require (1) the removal of the person from all licensed activities for a specified period of time or indefinitely, (2) prior notice to the NRC before utilizing the person in licensed activities, or (3) the licensee to provide notice of the issuance of such an order to other persons involved in licensed activities making reference inquiries. In addition, orders to employers might require retraining, additional oversight, or independent verification of activities performed by the person, if the person is to be involved in licensed activities.

IX. Inaccurate and Incomplete Information

A violation of the regulations involving submittal of incomplete and/or inaccurate information, whether or not considered a material false statement, can result in the full range of enforcement sanctions. The labeling of a communication failure as a material false statement will be made on a case-by-case basis and will be reserved for egregious violations. Violations involving inaccurate or incomplete information or the failure to provide significant information identified by a licensee normally will be categorized based on the guidance herein, in Section IV, ''Severity of Violations,'' and in Supplement VII.

The Commission recognizes that oral information may in some situations be inherently less reliable than written submittals because of the absence of an opportunity for reflection and management review. However, the Commission must be able to rely on oral communications from licensee officials concerning significant information. Therefore, in determining whether to take enforcement action for an oral statement, consideration may be given to factors such as (1) the degree of knowledge that the communicator should have had, regarding the matter, in view of his or her position, training, and experience; (2) the opportunity and time available prior to the communication to assure the accuracy or completeness of the information; (3) the degree of intent or negligence, if any, involved; (4) the formality of the communication; (5) the reasonableness of NRC reliance on the information; (6) the importance of the information which was wrong or not provided; and (7) the reasonableness of the explanation for not providing complete and accurate information.

Absent at least careless disregard, an incomplete or inaccurate unsworn oral statement normally will not be subject to enforcement action unless it involves significant information provided by a licensee official. However, enforcement action may be taken for an unintentionally incomplete or inaccurate oral statement provided to the NRC by a licensee official or others on behalf of a licensee, if a record was made of the oral information and provided to the licensee thereby permitting an opportunity to correct the oral information, such as if a transcript of the communication or meeting summary containing the error was made available to the licensee and was not subsequently corrected in a timely manner.

When a licensee has corrected inaccurate or incomplete information, the decision to issue a Notice of Violation for the initial inaccurate or incomplete information normally will be dependent on the circumstances, including the ease of detection of the error, the timeliness of the correction, whether the NRC or the licensee identified the problem with the communication, and whether the NRC relied on the information prior to the correction. Generally, if the matter was promptly identified and corrected by the licensee prior to reliance by the NRC, or before the NRC raised a question about the information, no enforcement action will be taken for the initial inaccurate or incomplete information. On the other hand, if the misinformation is identified after the NRC relies on it, or after some question is raised regarding the accuracy of the information, then some enforcement action normally will be taken even if it is in fact corrected. However, if the initial submittal was accurate when made but later turns out to be erroneous because of newly discovered information or advance in technology, a citation normally would not be appropriate if, when the new information became available or the advancement in technology was made, the initial submittal was corrected.

The failure to correct inaccurate or incomplete information which the licensee does not identify as significant normally will not constitute a separate violation. However, the circumstances surrounding the failure to correct may be considered relevant to the determination of enforcement action for the initial inaccurate or incomplete statement. For example, an unintentionally inaccurate or incomplete submission may be treated as a more severe matter if the licensee later determines that the initial submittal was in error and does not correct it or if there were clear opportunities to identify the error. If information not corrected was recognized by a licensee as significant, a separate citation may be made for the failure to provide significant information. In any event, in serious cases where the licensee's actions in not correcting or providing information raise questions about its commitment to safety or its fundamental trustworthiness, the Commission may exercise its authority to issue orders modifying, suspending, or revoking the license. The Commission recognizes that enforcement determinations must be made on a case-by-case basis, taking into consideration the issues described in this section.

X. Enforcement Action Against Non-Licensees

The Commission's enforcement policy is also applicable to non-licensees, including contractors and subcontractors, holders of NRC approvals, e.g., certificates of compliance, early site permits, standard design certificates, quality assurance program approvals, or applicants for any of them, and to employees of any of the foregoing, who knowingly provide components, equipment, or other goods or services that relate to a licensee's activities subject to NRC regulation. The prohibitions and sanctions for any of these persons who engage in deliberate misconduct or knowing submission of incomplete or inaccurate information are provided in the rule on deliberate misconduct, e.g., 10 CFR 30.10 and 50.5.

Contractors who supply products or services provided for use in nuclear activities are subject to certain requirements designed to ensure that the products or services supplied that could affect safety are of high quality. Through procurement contracts with licensees, suppliers may be required to have quality assurance programs that meet applicable requirements, e.g., 10 CFR Part 50, Appendix B, and 10 CFR Part 71, Subpart H. Contractors supplying certain products or services

to licensees are subject to the requirements of 10 CFR Part 21 regarding reporting of defects in basic components.

When inspections determine that violations of NRC requirements have occurred, or that contractors have failed to fulfill contractual commitments (e.g., 10 CFR Part 50, Appendix B) that could adversely affect the quality of a safety significant product or service, enforcement action will be taken. Notices of Violation and civil penalties will be used, as appropriate, for licensee failures to ensure that their contractors have programs that meet applicable requirements. Notices of Violation will be issued for contractors who violate 10 CFR Part 21. Civil penalties will be imposed against individual directors or responsible officers of a contractor organization who knowingly and consciously fail to provide the notice required by 10 CFR 21.21(b)(1). Notices of Nonconformance will be used for contractors who fail to meet commitments related to NRC activities.

XI. Referrals to the Department of Justice

Alleged or suspected criminal violations of the Atomic Energy Act (and of other relevant Federal laws) are referred to the Department of Justice (DOJ) for investigation. Referral to the DOJ does not preclude the NRC from taking other enforcement action under this policy. However, enforcement actions will be coordinated with the DOJ in accordance with the Memorandum of Understanding between the NRC and the DOJ, 53 FR 50317 (December 14, 1988).

XII. Public Disclosure of Enforcement Actions

Enforcement actions and licensees' responses, in accordance with 10 CFR 2.790, are publicly available for inspection. In addition, press releases are generally issued for orders and civil penalties and are issued at the same time the order or proposed imposition of the civil penalty is issued. In addition, press releases are usually issued when a proposed civil penalty is withdrawn or substantially mitigated by some amount. Press releases are not normally issued for Notices of Violation that are not accompanied by orders or proposed civil penalties.

XIII. Reopening Closed Enforcement Actions

If significant new information is received or obtained by NRC which indicates that an enforcement sanction was incorrectly applied, consideration may be given, dependent on the circumstances, to reopening a closed enforcement action to increase or decrease the severity of a sanction or to correct the record. Reopening decisions will be made on a case-by-case basis, are expected to occur rarely, and require the specific approval of the Deputy Executive Director.

Appendix A: Safety and Compliance

As commonly understood, safety means freedom from exposure to danger, or protection from harm. In a practical sense, an activity is deemed to be safe if the perceived risks are judged to be acceptable. The Atomic Energy Act of 1954, as amended, establishes ''adequate protection'' as the standard of safety on which NRC regulation is based. In the context of NRC regulation, safety means avoiding undue risk or, stated another way, providing reasonable assurance of adequate protection for the public in connection with the use of source, byproduct and special nuclear materials.

The definition of compliance is much simpler. Compliance simply means meeting applicable regulatory requirements. The relationship between compliance and safety is discussed below.

- Safety is the fundamental regulatory objective, and compliance with NRC requirements plays a fundamental role in giving the NRC confidence that safety is being maintained. NRC requirements, including technical specifications, other license conditions, orders, and regulations, have been designed to ensure adequate protection—which corresponds to ''no undue risk to public health and safety''—through acceptable design, construction, operation, maintenance, modification, and quality assurance measures. In the context of risk-informed regulation, compliance plays a very important role in ensuring that key assumptions used in underlying risk and engineering analyses remain valid.
- Adequate protection is presumptively assured by compliance with NRC requirements. Circumstances may arise, however, where new information reveals, for example, that an unforeseen hazard exists or that there is a substantially greater potential for a known hazard to occur. In such situations, the NRC has the statutory authority to require licensee action above and beyond existing regulations to maintain the level of protection necessary to avoid undue risk to public health and safety.
- The NRC has the authority to exercise discretion to permit continued operations—despite the existence of a noncompliance—where the noncompliance is not significant from a risk perspective and does not, in the particular circumstances, pose an undue risk to public health and safety. When non-compliances occur, the NRC must evaluate the degree of risk posed by that non-compliance to determine if specific immediate action is required. Where needed to ensure adequate protection of public health and safety, the NRC may demand immediate licensee action, up to and including a shutdown or cessation of licensed activities. In addition, in determining the appropriate action to be taken, the NRC must evaluate the non-compliance both in terms of its direct safety and regulatory significance and by assessing whether it is part of a pattern of non-compliance (i.e., the degree of pervasiveness) that can lead to the determination that licensee control processes are no longer adequate to ensure protection of the public health and safety. Based on the NRC's evaluation, the appropriate action could include refraining from taking any action, taking specific enforcement action, issuing orders, or providing input to other regulatory actions or assessments, such as increased oversight (e.g., increased inspection).
- Since some requirements are more important to safety than others, the Commission should use a risk-informed approach when applying NRC resources to the oversight of licensed activities (this includes enforcement).

Appendix B: Supplements—Enforcement Examples

This appendix provides examples of violations in each of four severity levels as guidance in determining the appropriate severity level for violations in each of eight activity areas (reactor operations, Part 50 facility construction, safeguards, health physics, transportation, fuel cycle and materials operations, miscellaneous matters, and emergency preparedness).

Supplement I—Reactor Operations

This supplement provides examples of violations in each of the four severity levels as guidance in determining the appropriate severity level for violations in the area of reactor operations.

A. *Severity Level I*—Violations involving for example:

1. A Safety Limit, as defined in 10 CFR 50.36 and the Technical Specifications being exceeded;
2. A system [11] designed to prevent or mitigate a serious safety event not being able to perform its intended safety function [12] when actually called upon to work;
3. An accidental criticality; or
4. A licensed operator at the controls of a nuclear reactor, or a senior operator directing licensed activities, involved in procedural errors which result in, or exacerbate the consequences of, an alert or higher level emergency and who, as a result of subsequent testing, receives a confirmed positive test result for drugs or alcohol.

B. *Severity Level II*—Violations involving for example:

1. A system designed to prevent or mitigate serious safety events not being able to perform its intended safety function;
2. A licensed operator involved in the use, sale, or possession of illegal drugs or the consumption of alcoholic beverages, within the protected area;

[11] The term ''system'' as used in these supplements, includes administrative and managerial control systems, as well as physical systems.

[12] ''Intended safety function'' means the total safety function, and is not directed toward a loss of redundancy. A loss of one subsystem does not defeat the intended safety function as long as the other subsystem is operable.

3. A licensed operator at the control of a nuclear reactor, or a senior operator directing licensed activities, involved in procedural errors and who, as a result of subsequent testing, receives a confirmed positive test result for drugs or alcohol; or

4. Failures to meet 10 CFR 50.59 including several unreviewed safety questions, or conflicts with technical specifications, involving a broad spectrum of problems affecting multiple areas, some of which impact the operability of required equipment.

C. *Severity Level III*—Violations involving for example:

1. A significant failure to comply with the Action Statement for a Technical Specification Limiting Condition for Operation where the appropriate action was not taken within the required time, such as:

(a) In a pressurized water reactor, in the applicable modes, having one high-pressure safety injection pump inoperable for a period in excess of that allowed by the action statement; or

(b) In a boiling water reactor, one primary containment isolation valve inoperable for a period in excess of that allowed by the action statement.

2. A system designed to prevent or mitigate a serious safety event:

(a) Not being able to perform its intended function under certain conditions (e.g., safety system not operable unless offsite power is available; materials or components not environmentally qualified); or

(b) Being degraded to the extent that a detailed evaluation would be required to determine its operability (e.g., component parameters outside approved limits such as pump flow rates, heat exchanger transfer characteristics, safety valve lift setpoints, or valve stroke times);

3. Inattentiveness to duty on the part of licensed personnel;

4. Changes in reactor parameters that cause unanticipated reductions in margins of safety;

5. [Reserved]

6. A licensee failure to conduct adequate oversight of contractors resulting in the use of products or services that are of defective or indeterminate quality and that have safety significance;

7. A breakdown in the control of licensed activities involving a number of violations that are related (or, if isolated, that are recurring violations) that collectively represent a potentially significant lack of attention or carelessness toward licensed responsibilities;

8. A licensed operator's confirmed positive test for drugs or alcohol that does not result in a Severity Level I or II violation;

9. Equipment failures caused by inadequate or improper maintenance that substantially complicates recovery from a plant transient;

10. The failure to meet 10 CFR 50.59 where an unreviewed safety question is involved, or a conflict with a technical specification, such that a license amendment is required;

11. The failure to perform the required evaluation under 10 CFR 50.59 prior to implementation of the change in those situations in which no unreviewed safety question existed, but an extensive evaluation would be needed before a licensee would have had a reasonable expectation that an unreviewed safety question did not exist;

12. Programmatic failures (i.e., multiple or recurring failures) to meet the requirements of 10 CFR 50.59 and/or 50.71(e) that show a significant lack of attention to detail, whether or not such failures involve an unreviewed safety question, resulting in a current safety or regulatory concern about the accuracy of the FSAR or a concern that 10 CFR 50.59 requirements are not being met. Application of this example requires weighing factors such as: a) the time period over which the violations occurred and existed, b) the number of failures, c) whether one or more systems, functions, or pieces of equipment were involved and the importance of such equipment, functions, or systems, and d) the potential significance of the failures;

13. The failure to update the FSAR as required by 10 CFR 50.71(e) where the unupdated FSAR was used in performing a 10 CFR 50.59 evaluation and as a result, an inadequate decision was made demonstrating a significant regulatory concern; or

14. The failure to make a report required by 10 CFR 50.72 or 50.73 associated with (a) an unreviewed safety question, (b) a conflict with a technical specification, or (c) any other Severity Level III violation.

D. *Severity Level IV*—Violations involving for example:

1. A less significant failure to comply with the Action Statement for a Technical Specification Limiting Condition for Operation where the appropriate action was not taken within the required time, such as:

(a) In a pressurized water reactor, a 5% deficiency in the required volume of the condensate storage tank; or

(b) In a boiling water reactor, one subsystem of the two independent MSIV leakage control subsystems inoperable;

2. [Reserved]

3. A failure to meet regulatory requirements that have more than minor safety or environmental significance;

4. A failure to make a required Licensee Event Report;

5. Relatively isolated violations of 10 CFR 50.59 not involving severity level II or III violations that do not suggest a programmatic failure to meet 10 CFR 50.59. Relatively isolated violations or failures would include a number of recently discovered violations that occurred over a period of years and are not indicative of a programmatic safety concern with meeting 10 CFR 50.59 or 50.71(e);

6. A relatively isolated failure to document an evaluation where there is evidence that an adequate evaluation was performed prior to the change in the facility or procedures, or the conduct of an experiment or test;

7. A failure to update the FSAR as required by 10 CFR 50.71(e) where an adequate evaluation under 10 CFR 50.59 had been performed and documented; or

8. A past programmatic failure to meet 10 CFR 50.59 and/or 10 CFR 50.71(e) requirements not involving Severity Level II or III violations that does not reflect a current safety or regulatory concern about the accuracy of the FSAR or a concern that 10 CFR 50.59 requirements are not being met.

E. Minor Violations

A failure to meet 10 CFR 50.59 requirements that involves a change to the FSAR description or procedure, or involves a test or experiment not described in the FSAR, where there was not a reasonable likelihood that the change to the facility or procedure or the conduct of the test or experiment would ever be an unreviewed safety question. In the case of a 10 CFR 50.71(e) violation, where a failure to update the FSAR would not have a material impact on safety or licensed activities. The focus of the minor violation is not on the actual change, test, or experiment, but on the potential safety role of the system, equipment, etc., that is being changed, tested, or experimented on.

Supplement II—Part 50 Facility Construction

This supplement provides examples of violations in each of the four severity levels as guidance in determining the appropriate severity level for violations in the area of Part 50 facility construction.

A. *Severity Level I*—Violations involving structures or systems that are completed [13] in such a manner that they would not have satisfied their intended safety related purpose.

B. *Severity Level II*—Violations involving for example:

1. A breakdown in the Quality Assurance (QA) program as exemplified by deficiencies in construction QA related to more than one work activity (e.g., structural, piping, electrical, foundations). These deficiencies normally involve the licensee's failure to conduct adequate audits or to take prompt corrective action on the basis of such audits and normally involve multiple examples of deficient construction or construction of unknown quality due to inadequate program implementation; or

2. A structure or system that is completed in such a manner that it could have an adverse effect on the safety of operations.

C. *Severity Level III*—Violations involving for example:

1. A deficiency in a licensee QA program for construction related to a single work activity (e.g., structural, piping, electrical or foundations). This significant deficiency normally involves the licensee's failure to conduct adequate audits or to take prompt corrective action on the basis of such audits, and normally involves multiple examples of deficient construction or construction of unknown quality due to inadequate program implementation;

2. A failure to confirm the design safety requirements of a structure or system as a result of inadequate preoperational test program implementation; or

3. A failure to make a required 10 CFR 50.55(e) report.

D. *Severity Level IV*—Violations involving failure to meet regulatory requirements including one or more Quality Assurance Criterion not amounting to Severity Level I,

[13] The term ''completed'' as used in this supplement means completion of construction including review and acceptance by the construction QA organization.

II, or III violations that have more than minor safety or environmental significance.

Supplement III—Safeguards

This supplement provides examples of violations in each of the four severity levels as guidance in determining the appropriate severity level for violations in the area of safeguards.

A. *Severity Level I*—Violations involving for example:

1. An act of radiological sabotage in which the security system did not function as required and, as a result of the failure, there was a significant event, such as:

(a) A Safety Limit, as defined in 10 CFR 50.36 and the Technical Specifications, was exceeded;

(b) A system designed to prevent or mitigate a serious safety event was not able to perform its intended safety function when actually called upon to work; or

(c) An accidental criticality occurred;

2. The theft, loss, or diversion of a formula quantity [14] of special nuclear material (SNM); or

3. Actual unauthorized production of a formula quantity of SNM

B. *Severity Level II*—Violations involving for example:

1. The entry of an unauthorized individual [15] who represents a threat into a vital area [16] from outside the protected area;

2. The theft, loss or diversion of SNM of moderate strategic significance [17] in which the security system did not function as required; or

3. Actual unauthorized production of SNM.

C. Severity Level III—Violations involving for example:

1. A failure or inability to control access through established systems or procedures, such that an unauthorized individual (i.e., not authorized unescorted access to protected area) could easily gain undetected access [18] into a vital area from outside the protected area;

2. A failure to conduct any search at the access control point or conducting an inadequate search that resulted in the introduction to the protected area of firearms, explosives, or incendiary devices and reasonable facsimiles thereof that could significantly assist radiological sabotage or theft of strategic SNM;

3. A failure, degradation, or other deficiency of the protected area intrusion detection or alarm assessment systems such that an unauthorized individual who represents a threat could predictably circumvent the system or defeat a specific zone with a high degree of confidence without insider knowledge, or other significant degradation of overall system capability;

4. A significant failure of the safeguards systems designed or used to prevent or detect the theft, loss, or diversion of strategic SNM;

5. A failure to protect or control classified or safeguards information considered to be significant while the information is outside the protected area and accessible to those not authorized access to the protected area;

6. A significant failure to respond to an event either in sufficient time to provide protection to vital equipment or strategic SNM, or with an adequate response force;

7. A failure to perform an appropriate evaluation or background investigation so that information relevant to the access determination was not obtained or considered and as a result a person, who would likely not have been granted access by the licensee, if the required investigation or evaluation had been performed, was granted access; or

8. A breakdown in the security program involving a number of violations that are related (or, if isolated, that are recurring violations) that collectively reflect a potentially significant lack of attention or carelessness toward licensed responsibilities.

D. *Severity Level IV*—Violations involving for example:

1. A failure or inability to control access such that an unauthorized individual (i.e., authorized to protected area but not to vital area) could easily gain undetected access into a vital area from inside the protected area or into a controlled access area;

2. A failure to respond to a suspected event in either a timely manner or with an adequate response force;

3. A failure to implement 10 CFR Parts 25 and 95 with respect to the information addressed under Section 142 of the Act, and the NRC approved security plan relevant to those parts;

4. A failure to make, maintain, or provide log entries in accordance with 10 CFR 73.71 (c) and (d), where the omitted information (i) is not otherwise available in easily retrievable records, and (ii) significantly contributes to the ability of either the NRC or the licensee to identify a programmatic breakdown;

5. A failure to conduct a proper search at the access control point;

6. A failure to properly secure or protect classified or safeguards information inside the protected area which could assist an individual in an act of radiological sabotage or theft of strategic SNM where the information was not removed from the protected area;

7. A failure to control access such that an opportunity exists that could allow unauthorized and undetected access into the protected area but which was neither easily nor likely to be exploitable;

8. A failure to conduct an adequate search at the exit from a material access area;

9. A theft or loss of SNM of low strategic significance that was not detected within the time period specified in the security plan, other relevant document, or regulation; or

10. Other violations that have more than minor safeguards significance.

Supplement IV—Health Physics (10 CFR Part 20)

This supplement provides examples of violations in each of the four severity levels as guidance in determining the appropriate severity level for violations in the area of health physics, 10 CFR Part 20.[19]

A. *Severity Level I*—Violations involving for example:

1. A radiation exposure during any year of a worker in excess of 25 rems total effective dose equivalent, 75 rems to the lens of the eye, or 250 rads to the skin of the whole body, or to the feet, ankles, hands or forearms, or to any other organ or tissue;

2. A radiation exposure over the gestation period of the embryo/fetus of a declared pregnant woman in excess of 2.5 rems total effective dose equivalent;

3. A radiation exposure during any year of a minor in excess of 2.5 rems total effective dose equivalent, 7.5 rems to the lens of the eye, or 25 rems to the skin of the whole body, or to the feet, ankles, hands or forearms, or to any other organ or tissue;

4. An annual exposure of a member of the public in excess of 1.0 rem total effective dose equivalent;

5. A release of radioactive material to an unrestricted area at concentrations in excess of 50 times the limits for members of the public as described in 10 CFR 20.1302(b)(2)(i); or

6. Disposal of licensed material in quantities or concentrations in excess of 10 times the limits of 10 CFR 20.2003.

B. *Severity Level II*—Violations involving for example:

1. A radiation exposure during any year of a worker in excess of 10 rems total effective dose equivalent, 30 rems to the lens of the eye, or 100 rems to the skin of the whole body, or to the feet, ankles, hands or forearms, or to any other organ or tissue;

2. A radiation exposure over the gestation period of the embryo/fetus of a declared pregnant woman in excess of 1.0 rem total effective dose equivalent;

3. A radiation exposure during any year of a minor in excess of 1 rem total effective dose equivalent; 3.0 rems to the lens of the eye, or 10 rems to the skin of the whole body, or to the feet, ankles, hands or forearms, or to any other organ or tissue;

4. An annual exposure of a member of the public in excess of 0.5 rem total effective dose equivalent;

5. A release of radioactive material to an unrestricted area at concentrations in excess of 10 times the limits for members of the public as described in 10 CFR 20.1302(b)(2)(i) (except when operation up to 0.5 rem a year has been approved by the Commission under Section 20.1301(c));

6. Disposal of licensed material in quantities or concentrations in excess of five times the limits of 10 CFR 20.2003; or

7. A failure to make an immediate notification as required by 10 CFR 20.2202 (a)(1) or (a)(2).

C. *Severity Level III*—Violations involving for example:

[14] See 10 CFR 73.2 for the definition of ''formula quantity.''

[15] The term ''unauthorized individual'' as used in this supplement means someone who was not authorized for entrance into the area in question, or not authorized to enter in the manner entered.

[16] The phrase ''vital area'' as used in this supplement includes vital areas and material access areas.

[17] See 10 CFR 73.2 for the definition of ''special nuclear material of moderate strategic significance.''

[18] In determining whether access can be easily gained, factors such as predictability, identifiability, and ease of passage should be considered.

[19] Personnel overexposures and associated violations incurred during a life-saving or other emergency response effort will be treated on a case-by-case basis.

1. A radiation exposure during any year of a worker in excess of 5 rems total effective dose equivalent, 15 rems to the lens of the eye, or 50 rems to the skin of the whole body or to the feet, ankles, hands or forearms, or to any other organ or tissue;

2. A radiation exposure over the gestation period of the embryo/fetus of a declared pregnant woman in excess of 0.5 rem total effective dose equivalent (except when doses are in accordance with the provisions of Section 20.1208(d));

3. A radiation exposure during any year of a minor in excess of 0.5 rem total effective dose equivalent; 1.5 rems to the lens of the eye, or 5 rems to the skin of the whole body, or to the feet, ankles, hands or forearms, or to any other organ or tissue;

4. A worker exposure above regulatory limits when such exposure reflects a programmatic (rather than an isolated) weakness in the radiation control program;

5. An annual exposure of a member of the public in excess of 0.1 rem total effective dose equivalent (except when operation up to 0.5 rem a year has been approved by the Commission under Section 20.1301(c));

6. A release of radioactive material to an unrestricted area at concentrations in excess of two times the effluent concentration limits referenced in 10 CFR 20.1302(b)(2)(i) (except when operation up to 0.5 rem a year has been approved by the Commission under Section 20.1301(c));

7. A failure to make a 24-hour notification required by 10 CFR 20.2202(b) or an immediate notification required by 10 CFR 20.2201(a)(1)(i);

8. A substantial potential for exposures or releases in excess of the applicable limits in 10 CFR Part 20 Sections 20.1001–20.2401 whether or not an exposure or release occurs;

9. Disposal of licensed material not covered in Severity Levels I or II;

10. A release for unrestricted use of contaminated or radioactive material or equipment that poses a realistic potential for exposure of the public to levels or doses exceeding the annual dose limits for members of the public, or that reflects a programmatic (rather than an isolated) weakness in the radiation control program;

11. Conduct of licensee activities by a technically unqualified person;

12. A significant failure to control licensed material; or

13. A breakdown in the radiation safety program involving a number of violations that are related (or, if isolated, that are recurring) that collectively represent a potentially significant lack of attention or carelessness toward licensed responsibilities.

D. *Severity Level IV*—Violations involving for example:

1. Exposures in excess of the limits of 10 CFR 20.1201, 20.1207, or 20.1208 not constituting Severity Level I, II, or III violations;

2. A release of radioactive material to an unrestricted area at concentrations in excess of the limits for members of the public as referenced in 10 CFR 20.1302(b)(2)(i) (except when operation up to 0.5 rem a year has been approved by the Commission under Section 20.1301(c));

3. A radiation dose rate in an unrestricted or controlled area in excess of 0.002 rem in any 1 hour (2 millirem/hour) or 50 millirems in a year;

4. Failure to maintain and implement radiation programs to keep radiation exposures as low as is reasonably achievable;

5. Doses to a member of the public in excess of any EPA generally applicable environmental radiation standards, such as 40 CFR Part 190;

6. A failure to make the 30-day notification required by 10 CFR 20.2201(a)(1)(ii) or 20.2203(a);

7. A failure to make a timely written report as required by 10 CFR 20.2201(b), 20.2204, or 20.2206;

8. A failure to report an exceedance of the dose constraint established in 10 CFR 20.1101(d) or a failure to take corrective action for an exceedance, as required by 10 CFR 20.1101(d); or

9. Any other matter that has more than a minor safety, health, or environmental significance.

Supplement V—Transportation

This supplement provides examples of violations in each of the four severity levels as guidance in determining the appropriate severity level for violations in the area of NRC transportation requirements [20].

A. *Severity Level I*—Violations involving for example:

1. Failure to meet transportation requirements that resulted in loss of control of radioactive material with a breach in package integrity such that the material caused a radiation exposure to a member of the public and there was clear potential for the public to receive more than .1 rem to the whole body;

2. Surface contamination in excess of 50 times the NRC limit; or

3. External radiation levels in excess of 10 times the NRC limit.

B. *Severity Level II*—Violations involving for example:

1. Failure to meet transportation requirements that resulted in loss of control of radioactive material with a breach in package integrity such that there was a clear potential for the member of the public to receive more than .1 rem to the whole body;

2. Surface contamination in excess of 10, but not more than 50 times the NRC limit;

3. External radiation levels in excess of five, but not more than 10 times the NRC limit; or

4. A failure to make required initial notifications associated with Severity Level I or II violations.

C. *Severity Level III*—Violations involving for example:

1. Surface contamination in excess of five but not more than 10 times the NRC limit;

2. External radiation in excess of one but not more than five times the NRC limit;

3. Any noncompliance with labeling, placarding, shipping paper, packaging, loading, or other requirements that could reasonably result in the following:

(a) A significant failure to identify the type, quantity, or form of material;

(b) A failure of the carrier or recipient to exercise adequate controls; or

(c) A substantial potential for either personnel exposure or contamination above regulatory limits or improper transfer of material;

4. A failure to make required initial notification associated with Severity Level III violations; or

5. A breakdown in the licensee's program for the transportation of licensed material involving a number of violations that are related (or, if isolated, that are recurring violations) that collectively reflect a potentially significant lack of attention or carelessness toward licensed responsibilities.

D. *Severity Level IV*—Violations involving for example:

1. A breach of package integrity without external radiation levels exceeding the NRC limit or without contamination levels exceeding five times the NRC limits;

2. Surface contamination in excess of but not more than five times the NRC limit;

3. A failure to register as an authorized user of an NRC-Certified Transport package;

4. A noncompliance with shipping papers, marking, labeling, placarding, packaging or loading not amounting to a Severity Level I, II, or III violation;

5. A failure to demonstrate that packages for special form radioactive material meets applicable regulatory requirements;

6. A failure to demonstrate that packages meet DOT Specifications for 7A Type A packages; or

7. Other violations that have more than minor safety or environmental significance.

Supplement VI—Fuel Cycle and Materials Operations

This supplement provides examples of violations in each of the four severity levels as guidance in determining the appropriate severity level for violations in the area of fuel cycle and materials operations.

A. *Severity Level I*—Violations involving for example:

1. Radiation levels, contamination levels, or releases that exceed 10 times the limits specified in the license;

2. A system designed to prevent or mitigate a serious safety event not being operable when actually required to perform its design function;

3. A nuclear criticality accident;

4. A failure to follow the procedures of the quality management program, required by 10 CFR 35.32, that results in a death or serious injury (e.g., substantial organ impairment) to a patient;

5. A safety limit, as defined in 10 CFR 76.4, the Technical Safety Requirements, or the application being exceeded; or

6. Significant injury or loss of life due to a loss of control over licensed or certified activities, including chemical processes that are integral to the licensed or certified activity, whether radioactive material is released or not.

B. *Severity Level II*—Violations involving for example:

[20] Some transportation requirements are applied to more than one licensee involved in the same activity such as a shipper and a carrier. When a violation of such a requirement occurs, enforcement action will be directed against the responsible licensee which, under the circumstances of the case, may be one or more of the licensees involved.

1. Radiation levels, contamination levels, or releases that exceed five times the limits specified in the license;

2. A system designed to prevent or mitigate a serious safety event being inoperable;

3. A substantial programmatic failure in the implementation of the quality management program required by 10 CFR 35.32 that results in a misadministration;

4. A failure to establish, implement, or maintain all criticality controls (or control systems) for a single nuclear criticality scenario when a critical mass of fissile material was present or reasonably available, such that a nuclear criticality accident was possible; or

5. The potential for a significant injury or loss of life due to a loss of control over licensed or certified activities, including chemical processes that are integral to the licensed or certified activity, whether radioactive material is released or not (e.g., movement of liquid UF^6 cylinder by unapproved methods).

C. *Severity Level III*—Violations involving for example:

1. A failure to control access to licensed materials for radiation protection purposes as specified by NRC requirements;

2. Possession or use of unauthorized equipment or materials in the conduct of licensee activities which degrades safety;

3. Use of radioactive material on humans where such use is not authorized;

4. Conduct of licensed activities by a technically unqualified or uncertified person;

5. A substantial potential for exposures, radiation levels, contamination levels, or releases, including releases of toxic material caused by a failure to comply with NRC regulations, from licensed or certified activities in excess of regulatory limits;

6. Substantial failure to implement the quality management program as required by 10 CFR 35.32 that does not result in a misadministration; failure to report a misadministration; or programmatic weakness in the implementation of the quality management program that results in a misadministration;

7. A breakdown in the control of licensed activities involving a number of violations that are related (or, if isolated, that are recurring violations) that collectively represent a potentially significant lack of attention or carelessness toward licensed responsibilities;

8. A failure, during radiographic operations, to have present at least two qualified individuals or to use radiographic equipment, radiation survey instruments, and/or personnel monitoring devices as required by 10 CFR Part 34;

9. A failure to submit an NRC Form 241 as required by 10 CFR 150.20;

10. A failure to receive required NRC approval prior to the implementation of a change in licensed activities that has radiological or programmatic significance, such as, a change in ownership; lack of an RSO or replacement of an RSO with an unqualified individual; a change in the location where licensed activities are being conducted, or where licensed material is being stored where the new facilities do not meet the safety guidelines; or a change in the quantity or type of radioactive material being processed or used that has radiological significance;

11. A significant failure to meet decommissioning requirements including a failure to notify the NRC as required by regulation or license condition, substantial failure to meet decommissioning standards, failure to conduct and/or complete decommissioning activities in accordance with regulation or license condition, or failure to meet required schedules without adequate justification;

12. A significant failure to comply with the action statement for a Technical Safety Requirement Limiting Condition for Operation where the appropriate action was not taken within the required time, such as:

(a) In an autoclave, where a containment isolation valve is inoperable for a period in excess of that allowed by the action statement; or

(b) Cranes or other lifting devices engaged in the movement of cylinders having inoperable safety components, such as redundant braking systems, or other safety devices for a period in excess of that allowed by the action statement;

13. A system designed to prevent or mitigate a serious safety event:

(a) Not being able to perform its intended function under certain conditions (e.g., safety system not operable unless utilities available, materials or components not according to specifications); or

(b) Being degraded to the extent that a detailed evaluation would be required to determine its operability;

14. Changes in parameters that cause unanticipated reductions in margins of safety;

15. A significant failure to meet the requirements of 10 CFR 76.68, including a failure such that a required certificate amendment was not sought;

16. A failure of the certificate holder to conduct adequate oversight of contractors resulting in the use of products or services that are of defective or indeterminate quality and that have safety significance;

17. Equipment failures caused by inadequate or improper maintenance that substantially complicates recovery from a plant transient;

18. A failure to establish, maintain, or implement all but one criticality control (or control systems) for a single nuclear criticality scenario when a critical mass of fissile material was present or reasonably available, such that a nuclear criticality accident was possible; or

19. A failure, during radiographic operations, to stop work after a pocket dosimeter is found to have gone off-scale, or after an electronic dosimeter reads greater than 200 mrem, and before a determination is made of the individual's actual radiation exposure.

D. *Severity Level IV*—Violations involving for example:

1. A failure to maintain patients hospitalized who have cobalt-60, cesium-137, or iridium-192 implants or to conduct required leakage or contamination tests, or to use properly calibrated equipment;

2. Other violations that have more than minor safety or environmental significance;

3. Failure to follow the quality management (QM) program, including procedures, whether or not a misadministration occurs, provided the failures are isolated, do not demonstrate a programmatic weakness in the implementation of the QM program, and have limited consequences if a misadministration is involved; failure to conduct the required program review; or failure to take corrective actions as required by 10 CFR 35.32;

4. A failure to keep the records required by 10 CFR 35.32 or 35.33;

5. A less significant failure to comply with the Action Statement for a Technical Safety Requirement Limiting Condition for Operation when the appropriate action was not taken within the required time;

6. A failure to meet the requirements of 10 CFR 76.68 that does not result in a Severity Level I, II, or III violation;

7. A failure to make a required written event report, as required by 10 CFR 76.120(d)(2); or

8. A failure to establish, implement, or maintain a criticality control (or control system) for a single nuclear criticality scenario when the amount of fissile material available was not, but could have been sufficient to result in a nuclear criticality.

Supplement VII—Miscellaneous Matters

This supplement provides examples of violations in each of the four severity levels as guidance in determining the appropriate severity level for violations involving miscellaneous matters.

A. *Severity Level I*—Violations involving for example:

1. Inaccurate or incomplete information [21] that is provided to the NRC (a) deliberately with the knowledge of a licensee official that the information is incomplete or inaccurate, or (b) if the information, had it been complete and accurate at the time provided, likely would have resulted in regulatory action such as an immediate order required by the public health and safety;

2. Incomplete or inaccurate information that the NRC requires be kept by a licensee that is (a) incomplete or inaccurate because of falsification by or with the knowledge of a licensee official, or (b) if the information, had it been complete and accurate when reviewed by the NRC, likely would have resulted in regulatory action such as an immediate order required by public health and safety considerations;

3. Information that the licensee has identified as having significant implications for public health and safety or the common defense and security (''significant information identified by a licensee'') and is deliberately withheld from the Commission;

4. Action by senior corporate management in violation of 10 CFR 50.7 or similar regulations against an employee;

5. A knowing and intentional failure to provide the notice required by 10 CFR Part 21; or

[21] In applying the examples in this supplement regarding inaccurate or incomplete information and records, reference should also be made to the buidance in Section IX, ''Inaccurate and Incomplete Information,'' and to the definition of ''licensee official'' contianed in Section IV.C.

6. A failure to substantially implement the required fitness-for-duty program.[22]

B. *Severity Level II*—Violations involving for example:

1. Inaccurate or incomplete information that is provided to the NRC (a) by a licensee official because of careless disregard for the completeness or accuracy of the information, or (b) if the information, had it been complete and accurate at the time provided, likely would have resulted in regulatory action such as a show cause order or a different regulatory position;

2. Incomplete or inaccurate information that the NRC requires be kept by a licensee which is (a) incomplete or inaccurate because of careless disregard for the accuracy of the information on the part of a licensee official, or (b) if the information, had it been complete and accurate when reviewed by the NRC, likely would have resulted in regulatory action such as a show cause order or a different regulatory position;

3. ''Significant information identified by a licensee'' and not provided to the Commission because of careless disregard on the part of a licensee official;

4. An action by plant management or mid-level management in violation of 10 CFR 50.7 or similar regulations against an employee;

5. A failure to provide the notice required by 10 CFR Part 21;

6. A failure to remove an individual from unescorted access who has been involved in the sale, use, or possession of illegal drugs within the protected area or take action for on duty misuse of alcohol, prescription drugs, or over-the-counter drugs;

7. A failure to take reasonable action when observed behavior within the protected area or credible information concerning activities within the protected area indicates possible unfitness for duty based on drug or alcohol use;

8. A deliberate failure of the licensee's Employee Assistance Program (EAP) to notify licensee's management when EAP's staff is aware that an individual's condition may adversely affect safety related activities; or

9. The failure of licensee management to take effective action in correcting a hostile work environment.

C. *Severity Level III*—Violations involving for example:

1. Incomplete or inaccurate information that is provided to the NRC (a) because of inadequate actions on the part of licensee officials but not amounting to a Severity Level I or II violation, or (b) if the information, had it been complete and accurate at the time provided, likely would have resulted in a reconsideration of a regulatory position or substantial further inquiry such as an additional inspection or a formal request for information;

2. Incomplete or inaccurate information that the NRC requires be kept by a licensee that is (a) incomplete or inaccurate because of inadequate actions on the part of licensee officials but not amounting to a Severity Level I or II violation, or (b) if the information, had it been complete and accurate when reviewed by the NRC, likely would have resulted in a reconsideration of a regulatory position or substantial further inquiry such as an additional inspection or a formal request for information;

3. A failure to provide ''significant information identified by a licensee'' to the Commission and not amounting to a Severity Level I or II violation;

4. An action by first-line supervision or other low-level management in violation of 10 CFR 50.7 or similar regulations against an employee;

5. An inadequate review or failure to review such that, if an appropriate review had been made as required, a 10 CFR Part 21 report would have been made;

6. A failure to complete a suitable inquiry on the basis of 10 CFR Part 26, keep records concerning the denial of access, or respond to inquiries concerning denials of access so that, as a result of the failure, a person previously denied access for fitness-for-duty reasons was improperly granted access;

7. A failure to take the required action for a person confirmed to have been tested positive for illegal drug use or take action for onsite alcohol use; not amounting to a Severity Level II violation;

8. A failure to assure, as required, that contractors have an effective fitness-for-duty program;

9. A breakdown in the fitness-for-duty program involving a number of violations of the basic elements of the fitness-for-duty program that collectively reflect a significant lack of attention or carelessness towards meeting the objectives of 10 CFR 26.10; or

10. Threats of discrimination or restrictive agreements which are violations under NRC regulations such as 10 CFR 50.7(f).

D. *Severity Level IV*—Violations involving for example:

1. Incomplete or inaccurate information of more than minor significance that is provided to the NRC but not amounting to a Severity Level I, II, or III violation;

2. Information that the NRC requires be kept by a licensee and that is incomplete or inaccurate and of more than minor significance but not amounting to a Severity Level I, II, or III violation;

3. An inadequate review or failure to review under 10 CFR Part 21 or other procedural violations associated with 10 CFR Part 21 with more than minor safety significance;

4. Violations of the requirements of Part 26 of more than minor significance;

5. A failure to report acts of licensed operators or supervisors pursuant to 10 CFR 26.73; or

6. Discrimination cases which, in themselves, do not warrant a Severity Level III categorization.

Supplement VIII—Emergency Preparedness

This supplement provides examples of violations in each of the four severity levels as guidance in determining the appropriate severity level for violations in the area of emergency preparedness. It should be noted that citations are not normally made for violations involving emergency preparedness occurring during emergency exercises. However, where exercises reveal (i) training, procedural, or repetitive failures for which corrective actions have not been taken, (ii) an overall concern regarding the licensee's ability to implement its plan in a manner that adequately protects public health and safety, or (iii) poor self critiques of the licensee's exercises, enforcement action may be appropriate.

A. *Severity Level I*—Violations involving for example:

In a general emergency, licensee failure to promptly (1) correctly classify the event, (2) make required notifications to responsible Federal, State, and local agencies, or (3) respond to the event (e.g., assess actual or potential offsite consequences, activate emergency response facilities, and augment shift staff.)

B. *Severity Level II*—Violations involving for example:

1. In a site emergency, licensee failure to promptly (1) correctly classify the event, (2) make required notifications to responsible Federal, State, and local agencies, or (3) respond to the event (e.g., assess actual or potential offsite consequences, activate emergency response facilities, and augment shift staff); or

2. A licensee failure to meet or implement more than one emergency planning standard involving assessment or notification.

C. *Severity Level III*—Violations involving for example:

1. In an alert, licensee failure to promptly (1) correctly classify the event, (2) make required notifications to responsible Federal, State, and local agencies, or (3) respond to the event (e.g., assess actual or potential offsite consequences, activate emergency response facilities, and augment shift staff);

2. A licensee failure to meet or implement one emergency planning standard involving assessment or notification; or

3. A breakdown in the control of licensed activities involving a number of violations that are related (or, if isolated, that are recurring violations) that collectively represent a potentially significant lack of attention or carelessness toward licensed responsibilities.

D. *Severity Level IV*—Violations involving for example:

A licensee failure to meet or implement any emergency planning standard or requirement not directly related to assessment and notification.

Dated at Rockville, Maryland, this 6th day of May, 1998.

For the Nuclear Regulatory Commission.

John C. Hoyle,

Secretary of the Commission.

[FR Doc. 98–12534 Filed 5–12–98; 8:45 am]

BILLING CODE 7590–01–P

[22] The example for violations for fitness-for-duty relate to violations of 10 CFR Part 26.

NUCLEAR REGULATORY COMMISSION

[Docket No. 50–285]

Omaha Public Power District, Fort Calhoun Station, Unit No. 1; Environmental Assessment and Finding of No Significant Impact

The U.S. Nuclear Regulatory Commission (the Commission) is considering issuance of an exemption from certain requirements of its regulations to Omaha Public Power District, holder of Facility Operating License No. DPR–40 for operation of the Fort Calhoun Station, Unit No. 1 located in Washington County, Nebraska.

Environmental Assessment Action

Identification of Proposed Action

The proposed action would exempt Omaha Public Power District from the requirements of 10 CFR part 50, appendix R, Section III.O, with respect to certain unpressurized components. Section III.0 requires reactor coolant pumps be equipped with an oil collection system if the containment is not inerted during normal operation. The collection systems shall be capable of collecting lube oil from all potential pressurized and unpressurized leakage sites in the reactor coolant pump lube oil systems. Leakage shall be collected and drained to a vented closed container that can hold the entire lube oil system inventory.

The proposed action is in accordance with the licensee's application for exemption dated September 30, 1997, as supplemented by letter dated January 29, 1998.

The Need for the Proposed Action

The proposed action is needed because it would be extremely difficult for the licensee to design, install, and maintain the specified portions of the collection system due to location, arrangement, equipment interferences, and radiation dose as low as reasonably achievable (ALARA) considerations.

Environmental Impacts of the Proposed Action

The Commission has completed its evaluation of the proposed action and concludes that there is no significant environmental impact associated with the proposed exemption. The unpressurized components at issue do not present a significant risk of oil leakage that could lead to fire in containment during normal or design basis accident conditions. The proposed action, therefore, will not increase the probability or consequences of accidents, no changes are being made in the types of any effluents that may be released offsite, and there is no significant increase in the allowable individual or cumulative occupational radiation exposure. Accordingly, the Commission concludes that there are no significant radiological environmental impacts associated with the proposed action.

With regard to potential nonradiological impacts, the proposed action does involve features located entirely within the restricted area as defined in 10 CFR part 20. It does not affect nonradiological plant effluents and has no other environmental impact. Accordingly, the Commission concludes that there are no significant nonradiological environmental impacts associated with the proposed action.

Alternatives to the Proposed Action

Since the Commission has concluded there is no measurable environmental impact associated with the proposed action, any alternatives with equal or greater environmental impact need not be evaluated. As an alternative to the proposed action, the staff considered denial of the proposed action. Denial of the application would result in no change in current environmental impacts. The environmental impacts of the proposed action and the alternative action are similar.

Alternative Use of Resources

This action does not involve the use of any resources not previously considered in the Final Environmental Statement (FES) for the Fort Calhoun Station, Unit No. 1, dated August 1972.

Agencies and Persons Consulted

In accordance with its stated policy, on April 27, 1998, the staff consulted with the Nebraska State official, Ms. Cheryl Rodgers of the Department of Health, regarding the environmental impact of the proposed action. The State official had no comments.

Finding of No Significant Impact

Based upon the environmental assessment, the Commission concludes that the proposed action will not have a significant effect on the quality of the human environment, Accordingly, the Commission has determined not to prepare an environmental impact statement for the proposed action.

For further details with respect to the proposed action, see the licensee's letter dated September 30, 1997, and supplemental letter dated January 29, 1998, which are available for public inspection at the Commission's Public Document Room, which is located at The Gelman Building, 2120 L Street, NW., Washington, DC, and at the local public document room located at the W. Dale Clark Library, 215 South 15th Street, Omaha, Nebraska 68102.

Dated at Rockville, Maryland, this 7th day of May 1998.

For the Nuclear Regulatory Commission.

Raynard Wharton,

Project Manager Project Directorate IV–2, Division of Reactor Projects III/IV Office of Nuclear Reactor Regulation.

[FR Doc. 98–12672 Filed 5–12–98; 8:45 am]

BILLING CODE 7590–01–P

NUCLEAR REGULATORY COMMISSION

[Docket 72–1021]

Transnuclear, Inc.; Issuance of Environmental Assessment and Finding of No Significant Impact

By letter dated March 11, 1998, Transnuclear, Inc. (TN or applicant) requested an exemption, pursuant to 10 CFR 72.7, from the requirements of 10 CFR 72.234(c). TN, located in Hawthorne, New York, is seeking Nuclear Regulatory Commission (NRC or the Commission) approval to fabricate five TN–32 dry spent fuel storage casks prior to receipt of a Certificate of Compliance (COC). The casks are intended for use under the general license provisions of subpart K of 10 CFR part 72 by Duke Power Company (Duke) at the McGuire Nuclear Station (McGuire) located in Cornelius, North Carolina. The TN–32 dry spent fuel storage cask is currently used at Surry Power Station under a site-specific license.

Environmental Assessment (EA)

Identification of Proposed Action: The applicant is seeking Commission approval to fabricate five TN–32 casks prior to the Commission's issuance of a COC. The applicant requests an exemption from the requirements of 10 CFR 72.234(c), which state that ''Fabrication of casks under the Certificate of Compliance must not start prior to receipt of the Certificate of Compliance for the cask model.'' The proposed action before the Commission is whether to grant this exemption under 10 CFR 72.7.

Need for the Proposed Action: TN requested the exemption to ensure the availability of storage casks so that Duke can maintain full core off-load capability at McGuire. McGuire Unit 2 will lose full core off-load capability in August 2000. McGuire has proposed an initial cask loading in September 2000.

To support training and dry runs prior to the initial loading, Duke requests the delivery of the first cask by January 2000. TN states that to meet this schedule, purchase of cask components must begin promptly and fabrication must begin by September 1998.

The TN–32 COC application, dated September 24, 1997, is under consideration by the Commission. It is anticipated, if approved, the TN–32 COC may be issued in late 1999.

The proposed fabrication exemption will not authorize use of the casks to store spent fuel. That will occur only when, and if, a COC is issued. NRC approval of the fabrication exemption request should not be construed as an NRC commitment to favorably consider TN's application for a COC. TN will bear the risk of all activities conducted under the exemption, including the risk that the five casks TN plans to construct may not be usable because they may not meet specifications or conditions placed in a COC that NRC may ultimately approve.

Environmental Impacts of the Proposed Action: The Environmental Assessment for the final rule, ''Storage of Spent Nuclear Fuel in NRC-Approved Storage Casks at Nuclear Power Reactor Sites'', (55 FR 29181 (1990)) considered the potential environmental impacts of casks which are used to store spent fuel under a COC and concluded that there would be no significant environmental impacts. The proposed action now under consideration would not permit use of the casks, but only fabrication. There are no radiological environmental impacts from fabrication since cask fabrication does not involve radiological or radioactive materials. The major non-radiological environmental impacts involve use of natural resources due to cask fabrication. Each TN–32 storage cask weighs approximately 100 tons and is fabricated mainly from steel and plastic. The estimated 500 tons of steel required for five casks is expected to have very little impact on the steel industry. Additionally, the estimated 5 tons of plastic required for five casks is insignificant compared to the millions of tons of plastic produced annually. Cask fabrication would be at a metal fabrication facility, not at the reactor site. Fabrication of five casks is insignificant compared to the amount of metal fabrication performed annually in the United States. If the casks are not usable, the casks could be disposed of or recycled. The amount of material disposed of is insignificant compared to the amount of steel and plastic that is disposed of annually in the United States. Based upon this information, the fabrication of five casks will have no significant impact on the environment since no radioactive materials are involved, and the amount of natural resources used is minimal.

Alternative to the Proposed Action: Since there is no significant environmental impact associated with the proposed action, any alternatives with equal or greater environmental impact are not evaluated. The alternative to the proposed action would be to deny approval of the exemption and, therefore, not allow cask fabrication until a COC is issued. However, the environmental impacts of the proposed action and the alternative action would be the same.

Given that there are no significant differences in environmental impacts between the proposed action and the alternative considered and that the applicant has a legitimate need to fabricate the casks prior to certification and is willing to assume the risk that the fabricated casks may not be certified or may require modification, the Commission concludes that the preferred alternative is to grant the exemption.

Agencies and Persons Consulted: The North Carolina Division of Radiation Protection was consulted about the EA for the proposed action and had no concerns.

References used in preparation of the EA:

1. NRC, Environmental Assessment Regarding Final Rule, ''Storage of Spent Fuel in NRC-Approved Storage Casks at Power Reactor Sites,'' 55 FR 29181.

2. NRC, 10 CFR part 51, Environmental Protection Regulations for Domestic Licensing and Related Regulatory Functions.

Finding of No Significant Impact

The environmental impacts of the proposed action have been reviewed in accordance with the requirements set forth in 10 CFR part 51. Based upon the foregoing EA, the Commission finds that the proposed action of granting an exemption from 10 CFR 72.234(c) so that TN may fabricate five TN–32 casks prior to issuance of a COC will not significantly impact the quality of the human environment. Accordingly, the Commission has determined not to prepare an environmental impact statement for the proposed exemption.

This application was docketed under 10 CFR part 72, Docket 72–1021. For further details with respect to this action, see the application dated March 11, 1998, which is available for public inspection at the Commission's Public Document Room, 2120 L Street, NW, Washington, DC 20555, and the Local Public Document Room at the J. Murrey Atkins Library, University of North Carolina at Charlotte, UNCC Station, Charlotte, NC 28223.

Dated at Rockville, Maryland, this 6th day of May 1998.

For the Nuclear Regulatory Commission.

Susan F. Shankman,

Acting Deputy Director, Spent Fuel Project Office, Office of Nuclear Material Safety and Safeguards.

[FR Doc. 98–12670 Filed 5–12–98; 8:45 am]

BILLING CODE 7590–01–P

NUCLEAR REGULATORY COMMISSION

[Docket 72–1027]

Transnuclear, Inc.; Issuance of Environmental Assessment and Finding of No Significant Impact

By letter dated January 23, 1998, Transnuclear, Inc. (TN or applicant) requested an exemption, pursuant to 10 CFR 72.7, from the requirements of 10 CFR 72.234(c). TN, located in Hawthorne, New York, is seeking Nuclear Regulatory Commission (NRC or the Commission) approval to fabricate nine TN–68 dry spent fuel storage casks prior to receipt of a Certificate of Compliance (COC). The TN–68 cask is similar in design to the TN–32 and TN–40 dry spent fuel storage casks which have been approved for use at Independent Spent Fuel Storage Installations with site-specific licenses. The TN–68 casks are intended to be used by PECO Energy Company (PECO) at the Peach Bottom Atomic Power Station (PBAPS) located in Delta, Pennsylvania, under the general license provisions of subpart K of 10 CFR Part 72.

Environmental Assessment (EA)

Identification of Proposed Action: The applicant is seeking Commission approval to fabricate nine TN–68 casks prior to the Commission's issuance of a COC. The applicant requests an exemption from the requirements of 10 CFR 72.234(c), which states that ''fabrication of casks under the Certificate of Compliance must not start prior to receipt of the Certificate of Compliance for the cask model.'' The proposed action before the Commission is whether to grant this exemption under 10 CFR 72.7.

Need for the Proposed Action: TN requests the exemption to ensure the availability of storage casks by July 2000, so that PECO can maintain full core off-load capability at PBAPS. TN states that to meet this schedule, purchase of cask components must

begin promptly and fabrication must begin in the summer of 1998. The TN–68 COC application, dated January 23, 1998, is under consideration by the Commission. It is anticipated, if approved, the TN–68 COC may be issued in 2000.

The proposed fabrication exemption will not authorize use of the casks to store spent fuel. That will occur only when, and if, a COC is issued. NRC approval of the fabrication exemption request may not be construed as an NRC commitment to favorably consider TN's application for a COC. TN will bear the risk of all activities conducted under the exemption, including the risk that the nine casks TN plans to construct may not be usable because they may not meet specifications or conditions placed in a COC that NRC may ultimately approve.

Environmental Impacts of the Proposed Action: The Environmental Assessment for the final rule, ''Storage of Spent Nuclear Fuel in NRC-Approved Storage Casks at Nuclear Power Reactor Sites' (55 FR 29181 (1990)), considered the potential environmental impacts of casks which are used to store spent fuel under a COC and concluded that there would be no significant environmental impacts. The proposed action now under consideration would not permit use of the casks, but only fabrication. There are no radiological environmental impacts from fabrication since cask fabrication does not involve radiological or radioactive materials. The major non-radiological environmental impacts involve use of natural resources due to cask fabrication. Each TN–68 storage cask weighs approximately 100 tons and is fabricated mainly from steel and plastic. The estimated 900 tons of steel required for nine casks is expected to have very little impact on the steel industry. Additionally, the estimated 9 tons of plastic required for nine casks is insignificant compared to the millions of tons of plastic produced annually. Cask fabrication would be at a metal fabrication facility, not at the reactor site. Fabrication of nine casks is insignificant compared to the amount of metal fabrication performed annually in the United States. If the casks are not usable, the casks could be disposed of or recycled. The amount of material disposed of is insignificant compared to the amount of steel and plastic that is disposed of annually in the United States. Based upon this information, the fabrication of nine casks will have no significant impact on the environment since no radioactive materials are involved, and the amount of natural resources used is minimal.

Alternative to the Proposed Action: Since there is no significant environmental impact associated with the proposed action, any alternatives with equal or greater environmental impact are not evaluated. The alternative to the proposed action would be to deny approval of the exemption and, therefore, not allow cask fabrication until a COC is issued. However, if a COC is issued and fabrication of the casks occurs, the environmental impacts of the proposed action and the alternative action would be the same.

Given that there are no significant differences in environmental impacts between the proposed action and the alternative considered and that the applicant has a legitimate need to fabricate the casks prior to certification and is willing to assume the risk that the fabricated casks may not be certified or may require modification, the Commission concludes that the preferred alternative is to grant the exemption.

Agencies and Persons Consulted: The Pennsylvania Department of Environmental Protection was consulted about the EA for the proposed action and had no comments.

References used in preparation of the EA:

1. NRC, Environmental Assessment Regarding Final Rule, ''Storage of Spent Fuel in NRC-Approved Storage Casks at Power Reactor Sites,'' 55 FR 29181.

2. NRC, 10 CFR part 51, Environmental Protection Regulations for Domestic Licensing and Related Regulatory Functions.

Finding of No Significant Impact

The environmental impacts of the proposed action have been reviewed in accordance with the requirements set forth in 10 CFR part 51. Based upon the foregoing EA, the Commission finds that the proposed action of granting an exemption from 10 CFR 72.234(c) so that TN may fabricate nine TN–68 casks prior to issuance of a COC will not significantly impact the quality of the human environment. Accordingly, the Commission has determined not to prepare an environmental impact statement for the proposed exemption.

This application was docketed under 10 CFR part 72, Docket 72–1027. For further details with respect to this action, see the application dated January 23, 1998, which is available for public inspection at the Commission's Public Document Room, 2120 L Street, NW, Washington, DC 20555, and the Local Public Document Room at the State Library of Pennsylvania, Walnut Street and Commonwealth Avenue, Harrisburg, PA 17105.

Dated at Rockville, Maryland, this 5th day of May 1998.

For the Nuclear Regulatory Commission,

Susan F. Shankman,

Acting Deputy Director, Spent Fuel Project Office, Office of Nuclear Material Safety and Safeguards.

[FR Doc. 98–12674 Filed 5–12–98; 8:45 am]

BILLING CODE 7590–01–P

NUCLEAR REGULATORY COMMISSION

[Docket Number 07003085; License Number SNM–2001]

Public Meeting To Discuss the Decommissioning of the Babcock and Wilcox Shallow Land Disposal Area in Parks Township, PA

AGENCY: Nuclear Regulatory Commission.

ACTION: Public meeting.

SUMMARY: This notice is to inform the public of a meeting to discuss the decommissioning of the Babcock and Wilcox (B&W) Shallow Land Disposal Area (SLDA) in Parks Township, PA. The meeting will be held on May 27, 1998, in the Leechburg High School Cafeteria on Siberian Avenue, in Leechburg, PA. The meeting will begin at 7 p.m. and will end at 9:30 p.m. The meeting will consist of a facilitated discussion, followed by an opportunity for comments by interested members of the public.

SUPPLEMENTARY INFORMATION: The SLDA is located in Armstrong County, PA, approximately 23 miles east-northeast of Pittsburgh. The SLDA consists of ten waste disposal trenches comprising approximately 1.2 acres surrounded by a 40-acre fenced buffer area. The SLDA was formerly owned by Nuclear Materials and Equipment Corporation (NUMEC) which also operated the nearby Apollo Nuclear Fuel Fabrication Facility. In the 1960s and 1970s, the SLDA was used by NUMEC to dispose of radioactively contaminated (primarily uranium and thorium) and non-radioactive wastes in accordance with NRC regulations at 10 CFR 20.304. NRC rescinded 10 CFR 20.304 in 1981. In 1967, Atlantic Richfield Company (ARCO) purchased stock in NUMEC and then sold it to B&W in 1971.

In September 1994, B&W submitted several remediation alternatives for the SLDA to NRC. B&W's preferred alternative was to stabilize the waste in place by covering the buried waste with a soil and synthetic cover and isolating

the waste from the groundwater with slurry walls, grout curtains and other engineered barriers. Based on B&W's proposed alternative for decommissioning the SLDA, NRC published a notice in the **Federal Register** announcing NRC's intent to develop an Environmental Impact Statement (EIS) for the decommissioning of the site. NRC conducted an EIS scoping meeting in Leechburg, PA, on January 26, 1995, and released a scoping summary report on May 30, 1995. In August 1997, NRC completed development of a draft EIS (DEIS) and published a Notice of Availability in the **Federal Register** on September 4, 1997. NRC withdrew the DEIS on September 24, 1997, so that NRC staff could develop additional information regarding the alternatives presented in the DEIS.

CONDUCT OF MEETING: The meeting will be held on May 27, 1998, in the Leechburg High School Cafeteria on Siberian Avenue, in Leechburg, PA. The meeting will begin at 7:00 p.m. and will end at 9:30 p.m. The meeting will be facilitated by Mr. F. X. Cameron, NRC's Special Counsel for Public Liaison. The purpose of this meeting will be to discuss, with representative stakeholders and the public, the status of the decommissioning of the SLDA. The meeting will involve representatives from the NRC, local government and citizen groups and the public. These representatives will participate in a facilitated discussion. In addition, the public will be afforded the opportunity to provide comments at specified points during the discussion.

FOR FURTHER INFORMATION CONTACT: Dominick Orlando, Division of Waste Management, U.S. Nuclear Regulatory Commission, Mail Stop T–8F37, Washington, DC, telephone (301) 415–6749, e-mail DAO@NRC.GOV

Dated at Rockville, Maryland, this 5th day of May 1998.

For the Nuclear Regulatory Commission.

John W.N. Hickey,

Chief, Low-Level Waste and Decommissioning Projects Branch, Division of Waste Management, Office of Nuclear Material Safety and Safeguards.

[FR Doc. 98–12678 Filed 5–12–98; 8:45 am]

BILLING CODE 7590–01–P

NUCLEAR REGULATORY COMMISSION

Sunshine Act Meeting

AGENCY HOLDING THE MEETING: Nuclear Regulatory Commission.

DATE: Weeks of May 11, 18, 25, and June 1, 1998.

PLACE: Commissioners' Conference Room, 11555 Rockville Pike, Rockville, Maryland.

STATUS: Public and Closed.

MATTERS TO BE CONSIDERED:

Week of May 11

Wednesday, May 13

10:30 a.m. Affirmation Session (Public Meeting)

a: Final Rule: Amendments to 10 CFR Parts 30, 40, 50, 70, and 72-Self-Guarantee of Decommissioning Funding by Non-Profit and Non-Bond Issuing Licensee

b: Final Rule: Revision of 10 CFR 32.14 (D) to Place Timepieces Containing Gaseous Tritium Light Sources on the Same Regulatory Basis as Timepieces Containing Tritium Paint (Contact: Ken Hart, 301–415–1659)

Week of May 18—Tentative

There are no meetings the week of May 18.

Week of May 25—Tentative

Friday, May 29

10:30 a.m. Affirmation Session (Public Meeting) (if needed)

1:00 p.m. Briefing on Investigative Matters (Closed—Ex. 5 and 7)

Week of June 1—Tentative

Wednesday, June 3

8:30 a.m. Briefing on Remaining Issues Related to Proposed Restart of Millstone Unit 3. (Public Meeting) (Contact: Bill Travers, 301–415–1200)

12:30 p.m. (Continuation of Millstone meeting.)

Thursday, June 4

3:30 p.m. Affirmation Session (Public Meeting) (if needed)

Friday, June 5

10:00 a.m. Briefing by EPRI on their Strategic Plan for the Future (Public Meeting)

*The schedule for commission meetings is subject to change on short notice. To verify the status of meetings call (recording)—(301) 415–1292. Contact Person for more information: Bill Hill (301) 415–1661.

* * * * *

ADDITIONAL INFORMATION: The Commission meeting, ''Discussion of Management Issues (Closed—Ex. 2 and 6),'' previously scheduled for Thursday, April 30, was held on Thursday, May 7.

* * * * *

The NRC Commission Meeting Schedule can be found on the Internet at: http://www.nrc.gov/SECY/smj/schedule.htm

* * * * *

This notice is distributed by mail to several hundred subscribers; if you no longer wish to receive it, or would like to be added to it, please contact the Office of the Secretary, Attn: Operations Branch, Washington, D.C. 20555 (301–415–1661). In addition, distribution of this meeting notice over the Internet system is available. If you are interested in receiving this Commission meeting schedule electronically, please send an electronic message to wmh@nrc.gov or dkw@nrc.gov.

* * * * *

William M. Hill, Jr.,

SECY Tracking Officer Office of the Secretary.

[FR Doc. 98–12793 Filed 5–8–98; 4:17 pm]

BILLING CODE 7590–01–M

NUCLEAR REGULATORY COMMISSION

Notice of Availability of Draft NUREG–1628 ''Staff Responses to Frequently Asked Questions Concerning Decommissioning of Nuclear Power Reactors; Correction

AGENCY: Nuclear Regulatory Commission.

ACTION: Notice of availability; Correction.

SUMMARY: This document corrects a notice appearing in the **Federal Register** on April 27, 1998 (63 FR 20673), that announces the availability of Draft NUREG–1628 and requests public comment on the draft report. This action is necessary to include an inadvertent omission of the comment expiration date.

FOR FURTHER INFORMATION CONTACT: John L. Minns, Division of Reactor Program Management, Office of Nuclear Reactor Regulation, U.S. Nuclear Regulatory Commission, Washington, DC 20555–0001; telephone: 301 415–3166.

SUPPLEMENTARY INFORMATION: *Dates:* The comment period expires October 1, 1998.

Dated at Rockville, Maryland, this 7th day of May 1998.

For the Nuclear Regulatory Commission.

Seymour H. Weiss,

Director, Non-Power Reactors and Decommissioning of Project Directorate, Division of Reactor Project Management, Office of Nuclear Reactor Regulation.

[FR Doc. 98–12671 Filed 5–12–98; 8:45 am]

BILLING CODE 7590–01–M

SECURITIES AND EXCHANGE COMMISSION

[Release No. 34–39963; File No. SR–CBOE–98–16]

Self-Regulatory Organizations; Notice of Filing and Immediate Effectiveness of Proposed Rule Change by the Chicago Board Options Exchange, Inc. Relating to Exchange Fees

May 6, 1998.

Pursuant to Section 19(b)(1) of the Securities Exchange Act of 1934 (''Act'')[1] and Rule 19b–4[2] thereunder, notice is hereby given that on April 22, 1998, the Chicago Board Options Exchange, Inc. (''CBOE'' or ''Exchange'') filed with the Securities and Exchange Commission (''SEC'' or ''Commission'') the proposed rule change as described in Items I, II, and III below, which Items have been prepared by the CBOE.[3] The Commission is publishing this notice to solicit comments on the proposed rule change from interested persons.

I. Self-Regulatory Organization's Statement of the Terms of Substance of the Proposed Rule Change

The CBOE is proposing to change its Order Book Official (''book'') rate schedule for index options. The text of the proposed rule change is available at the Office of the Secretary, CBOE and at the Commission.

II. Self-Regulatory Organization's Statement of the Purpose of, and Statutory Basis for, the Proposed Rule Change

In its filing with the Commission, the CBOE included statements concerning the purpose of and basis for the proposed rule change and discussed any comments it received on the proposed rule change. The text of these statements may be examined at the places specified in Item IV below. The CBOE has prepared summaries, set forth in sections A, B, and C below, of the most significant aspects of such statements.

A. Self-Regulatory Organization's Statement of the Purpose of, and Statutory Basis for, the Proposed Rule Change

The purpose of the proposed rule change is to change the book fee schedule applicable to index options. The Exchange recently changed the book fees for equity options.[4] The book fees are billed at the end of each month and so this change will be reflected in the bills for all May transactions. These fees changes are being implemented by the Exchange pursuant to CBOE Rule 2.22. Under the new schedule, index option book execution services will be capped at a rate of $1.25 per contract. The current rate schedule for index options assess various charges for book executions depending on the premium and the order size. The current schedule for index options is as follows:

Premium[5]	First ten contracts	Eleven and above
Accommodation Liquidations	$0.10	$0.10
Cabinet trades	0.10	0.10
Under $0.50	0.35	0.28
$0.50–1	0.525	0.455
1–2	0.63	0.525
2–4	0.77	0.63
4–8	1.05	0.91
8–14	1.40	1.05
14–20	1.75	1.295
20 and above	2.10	1.61

The new schedule will be as follows:

Premium	First ten contracts	Eleven and above
Accommodation Liquidations	$0.10	$0.10
Cabinet trades	0.10	0.10
Under $0.50	0.35	0.28
$0.50–1	0.525	0.455
1–2	0.63	0.525
2–4	0.77	0.63
4–8	1.05	0.91
8–14	1.25	1.05
14 and above	1.25	1.25

[1] 15 U.S.C. 78s(b)(1).

[2] 17 CFR 240.19b–4.

[3] The proposed rule change required a technical amendment to clarify the fee schedule. Telephone conversation between Timothy Thompson, Senior Attorney, CBOE, and Karl Varner, Staff Attorney, SEC, on April 29, 1998.

[4] Securities Exchange Act Release No. 39618 (February 4, 1998), 63 FR 7019 (February 11, 1998) [File No. SR–CBOE–98–01] (changing the book fee rate for equity options to $0.45 per contract).

[5] Premium equals the option price in dollars, calculated on a per-share basis for equity option contracts, and calculated on a per-unit basis for index option contracts. The ranges set forth include their lower bounds.

Accommodation liquidations and cabinet trades are off-market trades at a price of $1 per option contract.

The definitions were clarified during a telephone conversation between Timothy Thompson, Senior Attorney, CBOE, and Karl Varner, Staff Attorney, SEC, on May 5, 1998.

* * * * *

As with the previous schedule, cabinet trades/accommodation liquidations, as described in CBOE Rules 6.54 and 21.15, will continue to be charged $0.10 per contract. In addition, as in the previous schedule, no execution fee will be assessed for market orders for any index option sent to the book prior to the opening and executed during opening rotation. Also, as before, no execution fee will be assessed for limit orders in options on the Standard & Poor's 100 Index sent to the book prior to the opening and executed during opening rotation. The new fee schedule should reduce the overall Order Book Official book fees paid by all Exchange members. The Exchange believes that the reduction in the book fees will allow the Exchange to compete more effectively for business in these types of products.

The proposed rule change is consistent with Section 6(b) of the Act,[6] in general, and furthers the objectives of Section 6(b)(4) of the Act[7] in particular, in that it is designed to provide for the equitable allocation of reasonable dues, fees, and other charges among CBOE members.

B. Self-Regulatory Organization's Statement on Burden on Competition

The Exchange believes that the proposed rule change will not result in any burden on competition that is not necessary or appropriate in furtherance of the purposes of the Act.

C. Self-Regulatory Organization's Statement on Comments on the Proposed Rule Change Received From Members, Participants, or Others

Comments were neither solicited nor received.

III. Date of Effectiveness of the Proposed Rule Change and Timing for Commission Action

The proposed rule change establishes or changes a due, fee, or other charge imposed by the Exchange and, therefore, has become effective immediately upon filing with the Commission, pursuant to Section 19(b)(3)(A)(ii) of the Act[8] and subparagraph (e)(2) of Rule 19b–4[9] thereunder. At any time within 60 days of the filing of the proposed rule change, the Commission may summarily abrogate such rule change if it appears to the Commission that such action is necessary or appropriate in the public interest, for the protection of investors, or otherwise in furtherance of the purposes of the Act.

IV. Solicitation of Comments

Interested persons are invited to submit written data, views, and arguments concerning the foregoing, including whether the proposed rule change is consistent with the Act.[10] Persons making written submissions should file six copies thereof with the Secretary, Securities and Exchange Commission, 450 Fifth Street, N.W., Washington, D.C. 20549. Copies of the submission, all subsequent amendments, all written statements with respect to the proposed rule change that are filed with the Commission, and all written communications relating to the proposed rule change between the Commission and any person, other than those that may be withheld from the public in accordance with the provisions of U.S.C. § 552, will be available for inspection and copying in the Commission's Public Reference Room. Copies of such filing will also be available for inspection and copying at the principal office of the Exchange. All submissions should refer to File No. SR–CBOE–98–16 and should be submitted by June 3, 1998.

For the Commission, by the Division of Market Regulation, pursuant to delegated authority.[11]

Margaret H. McFarland,

Deputy Secretary.

[FR Doc. 98–12707 Filed 5–12–98; 8:45 am]

BILLING CODE 8010–01–M

[6] 15 U.S.C. 78f(b).

[7] 15 U.S.C. 78f(b)(4).

[8] 15 U.S.C. 78s(b)(3)(A)(ii).

[9] 17 CFR 240.19b–4(e)(2).

[10] In reviewing this proposal, the Commission has considered the proposed rule change's impact on efficiency, competition, and capital formation. 15 U.S.C. 78c(f).

[11] 17 CFR 200.30–3(a)(12).

SECURITIES AND EXCHANGE COMMISSION

[Release No. 34–39965; International Series Release No. 1133; File No. SR–CBOE–98–17]

Self-Regulatory Organizations; Notice of Filing of Proposed Rule Change, and Amendment No. 1 Thereto, by the Chicago Board Options Exchange, Incorporated Relating To Listing and Trading Warrants on a Narrow-Based Index

May 6, 1998.

Pursuant to Section 19(b)(1) of the Securities Exchange Act of 1934 (''Act''),[1] and Rule 19b–4 thereunder,[2] notice is hereby given that on April 23, 1998, the Chicago Board Options Exchange, incorporated (''CBOE'' or ''Exchange'') filed with the Securities and Exchange Commission (''SEC'' or ''Commission'') the proposed rule change as described in Items I, II, and III below, which Items have been prepared by the CBOE. The Exchange also submitted an amendment to the filing dated April 30, 1998.[3] The Commission is publishing this notice to solicit comments on the proposed rule change and Amendment No. 1 from interested persons.

I. Self-Regulatory Organization's Statement of the Terms of Substance of the Proposed Rule Change

The CBOE proposes to list and trade warrants on an equal dollar-weighted, narrow-based index (''Index''), comprised of 15 to 20 actively traded common stocks, no more than four of which will be foreign issued and traded. The remaining stocks will be listed on the American Stock Exchange, Incorporated (''Amex''), New York Stock Exchange, Incorporated (''NYSE'') or through the facilities of the National Association of Securities Dealers Automated Quotation (''Nasdaq'') system and are reported national market system securities (''Nasdaq/NMS''). The text of the proposed rule change is available at the Office of the Secretary, CBOE and at the Commission.

II. Self-Regulatory Organization's Statement of the Purpose of, and Statutory Basis for, the Proposed Rule Change

In its filing with the Commission, the CBOE included statements concerning the purpose of and basis for the proposed rule change and represented that it did not receive any comments on the proposed rule change. The text of those statements may be examined at the places specified in Item IV below and is set forth in Sections A, B and C below.

A. Self-Regulatory Organization's Statement of the Purpose of, and the Statutory Basis for, the Proposed Rule Change

1. Purpose

The Exchange is permitted to list and trade stock index warrants under CBOE Rule 31.5E. The Exchange now is proposing to list and trade cash-settled,

[1] 15 U.S.C. 78s(b)(1)

[2] 17 CFR 240.19b–4.

[3] See Letter from Stephanie C. Mullins, Attorney, CBOE to Marianne H. Duffy, Special Counsel, Division of Market Regulation, SEC, dated April 30, 1998 (''Amendment No. 1''). Amendment No. 1 clarifies, among other things, that the Index, as defined above, is narrow-based and will comply with the generic narrow-based margin requirements (CBOE Rule 30.53) and position limited requirements (CBOE Rule 30.35) of the Exchange.

stock index warrants linked to the Index. At the time of listing and trading, the warrants will meet all of the generic criteria for stock index warrants as set forth in Exchange Rule 31.5E.

Rule 31.5E requires, among other things, that: (1) the issuer has a tangible net worth in excess of $250,000,000 and otherwise substantially exceeds earnings requirements in Rule 31.5(A) or meet the alternate guidelines in paragraph (4) of Rule 31.5E; (2) the term of the warrants shall be for a period ranging from one to five years from date of issuance; (3) the minimum public distribution of such issues shall be 1,000,000 warrants, together with a minimum of 400 public holders, and have an aggregate market value of $4,000,000; and (4) foreign country securities or American Depositary Receipts that are not subject to a comprehensive surveillance agreement and have less than 50% of their global trading volume in dollar value in the United States, shall not, in the aggregate, represent more than 20% of the weight of an index, unless such index is otherwise approved for warrant or option trading.

Index Design and Stock Selection Criteria. The Exchange represents that the Index will be categorized as narrow-based. The stocks to be included in the Index will be selected by a member firm of the Exchange and will be announced at or as close as possible to the time of the offering, and included in the Issuer's offering materials. The component stocks in the Index will meet the following criteria prior to trading of the warrants: (1) minimum market capitalization of $150 million, except that two component stocks may have a market capitalization of not less than $50 million; (2) trading volume during each of the six months prior to the offering of the warrants of not less than one million shares, except that two of the component securities may have a trading volume during each of the six months prior to the offering of the warrants of not less than 500,000 shares; (3) at least 80 percent of the component stocks will meet the then current criteria for standardized options trading set forth in CBOE Rule 5.3 and; (4) at least 80% of the Index components will be listed on the Amex, NYSE, or will be Nasdaq/NMS securities.

Calculation and Dissemination of the Index Value. The Index will be calculated using an equal dollar-weighting methodology designed to ensure that each of the component securities is represented in an approximately equal dollar amount in the Index. To create the Index, a portfolio of equity securities will be established by a member firm of the Exchange representing an investment of $10,000 in each component security (rounded to the nearest whole share). The value of the Index will equal the market value of the sum of the assigned number of shares of each of the component securities divided by an Index divisor. The Index divisor initially will be set to provide a benchmark value of 100 at the time that the warrants are priced for sales to the investing public.

The number of shares of each component stock in the Index will remain fixed except in the event of certain types of corporate actions such as the payment of a dividend (other than an ordinary cash dividend), a stock distribution, stock split, reverse stock split, rights offering, distribution, reorganization, recapitalization, or similar event with respect to the component securities. The number of shares of each component security also may be adjusted, if necessary, in the event of a merger, consolidation, dissolution, or liquidation of an issuer or in certain other events such as the distribution of property by an issuer to shareholders, the expropriation or nationalization of a foreign issuer, or the imposition of certain foreign taxes on shareholders of a foreign issuer. Shares of a component security may be replaced (or supplemented) with another security only under certain circumstances, such as in the event of a merger or consolidation, the conversion of a component security into another class of security, the termination of a depositary receipt program, or the spin-off of a subsidiary.[4] If the security remains in the Index, the number of shares of the security may be adjusted to the nearest whole share to maintain the component's relative weight in the Index at the level immediately prior to the corporate action. In all cases, the divisor will be adjusted, if necessary, to ensure continuity of the value of the Index.

Prices for any non-U.S. traded stock included in the Index will be based upon prevailing prices for such stock(s) at their primary exchange(s). Primary and backup pricing sources will be used to obtain prices for such stocks. All non-U.S. traded stocks will be valued in U.S. dollars using each country's cross-rate to the U.S. dollar. Bloomberg's composite New York rates, or comparable rates, quoted at 2:00 p.m. Chicago time the previous day, will be used to convert any non-U.S. traded stock price from the respective countries to U.S. dollars. If there are several quotes, the first quoted rate in that minute will be used to calculate the Index. In the event that there is no Bloomberg exchange rate for a country's currency at 2:00 p.m. the previous day, stocks will be valued at the first U.S. dollar cross-rate quoted before 2:00 p.m. Chicago time the previous day.

The value of the Index will be calculated and disseminated by CBOE every 15 seconds.

Index Warrant Trading (Exercise and Settlement). The warrants will be direct obligations of their issuer, subject to cash settlement in U.S. dollars and will be exercisable throughout their life (*i.e.*, American-Style) or exercisable at expiration (*i.e.*, European-Style). Upon exercise (or at the warrant expiration date in the case of warrants with European-Style exercise), the holder of a Warrant structured as a ''put'' will receive payment in U.S. dollars to the extent that the value of the Index has declined below a pre-stated cash settlement value. Conversely, upon exercise (or at the warrant expiration date in the case of warrants with European-Style exercise), the holder of a Warrant structured as a ''call'' will receive payment in U.S. dollars to the extent that the value of the Index has increased above the pre-stated cash settlement value. Warrants that are ''out-of-the-money'' at the time of expiration will expire worthless.

Warrant Listing Standards and Customer Safeguards. Sales practice rules applicable to the trading of index warrants are provided for in Exchange Rule 30.50 and to the extent provided by Rule 30.52 they are also contained in Chapter IX of the Exchange's Rules. Rule 30.50 governs, among other things, communications with the public. Rule 30.52 subjects the transaction of customer business in stock index warrants to many of the requirements of Chapter IX of the Exchange's rules dealing with public customer business, including suitability. For example, no member organization may accept an order from a customer to purchase a stock index warrant unless that customer's account has been approved for options transactions. The same suitability and use of discretion provisions that are applicable to transactions in options will be equally applicable to the warrants pursuant to CBOE rules. The listing and trading of index warrants on the Index will be subject to these guidelines and rules.

Other Applicable Exchange Rules. As previously stated, the CBOE represents that the Index will be categorized as narrow-based. As such, the generic

[4] No attempt will be made to find a replacement stock or to otherwise compensate for a stock which is extinguished due to bankruptcy or similar circumstances.

narrow-based standards regarding margin requirements provided for under Exchange Rules 30.53 and 12.3 will apply. The applicable generic narrow-based position and exercise limits will be determined pursuant to Exchange Rule 30.35.

2. Basis

The Exchange believes that the proposed rule change is consistent with Section 6(b) of the Act [5] in general, and furthers the objectives of Section 6(b)(5) [6] in particular, in that it will permit trading in warrants based on the Index pursuant to Exchange rules designed to prevent fraudulent and manipulative acts and practices, to promote just and equitable principles of trade, to remove impediments to and perfect the mechanism of a free and open market and a national market system, and to protect investors and the public interest.

B. Self-Regulatory Organization's Statement on Burden on Competition

The CBOE does not believe that the proposed rule change will impose any burden on competition.

C. Self-Regulatory Organization's Statement on Comments on the Proposed Rule Change Received From Members, Participants, or Others

No written comments were solicited or received with respect to the proposed rule change.

III. Solicitation of Comments

Interested persons are invited to submit written data, views and arguments concerning the foregoing, including whether the proposed rule change, and Amendment No. 1 thereto, is consistent with the Act. Persons making written submissions should file six copies thereof with the Secretary, Securities and Exchange Commission, 450 Fifth Street, N.W., Washington, D.C. 20549. Copies of the submission, all subsequent amendments, all written statements with respect to the proposed rule change that are filed with the Commission, and all written communications relating to the proposed rule change between the Commission and any person, other than those that may be withheld from the public in accordance with the provisions of 5 U.S.C. 552, will be available for inspection and copying in the Commission's Public Reference Section, 450 Fifth Street, N.W., Washington, D.C. 20549. Copies of such filing will also be available for inspection and copying at the principal office of CBOE. All submissions should refer to file number SR–CBOE–98–17 and should be submitted by June 3, 1998.

For the Commission, by the Division of Market Regulation, pursuant to delegated authority.[7]

Margaret H. McFarland,

Deputy Secretary.

[FR Doc. 98–12708 Filed 5–12–98; 8:45 am]

BILLING CODE 8010–01–M

[5] 15 U.S.C. 78f.

[6] 15 U.S.C. 78f(b)(5).

[7] 17 CFR 200.30–3(a)(12) (1994).

SECURITIES AND EXCHANGE COMMISSION

[Release No. 34–39973; File No. SR–NYSE–98–12]

Self-Regulatory Organizations; Notice of Filing of Proposed Rule Change and Amendment No. 1 Thereto by the New York Stock Exchange, Inc. Relating To Changes in Bond Listing Procedures and Practices

May 7, 1998.

Pursuant to Section 19(b)(1) of the Securities Exchange Act of 1934 (''Act''), [1] notice is hereby given that on April 15, 1998, the New York Stock Exchange, Inc. (''NYSE'' or ''Exchange'') filed with the Securities and Exchange Commission (''Commission'') the proposed rule change as described in Items I, II, and III below, which Items have been prepared by the NYSE. On April 30, 1998, the NYSE submitted to the Commission Amendment No. 1 to the proposed rule change.[2] The Commission is publishing this notice to solicit comments on the proposed rule change from interested persons.

I. Self-Regulatory Organization's Statement of the Terms of Substance of the Proposed Rule Change

The Exchange proposes to amend its Listed Company Manual to make certain changes regarding the listing requirements for debt securities and other debt security practices.

II. Self-Regulatory Organization's Statement of the Purpose of, and Statutory Basis for, the Proposed Rule Change

In its filing with the Commission, the NYSE included statements concerning the purpose of and basis for the proposed rule change and discussed any comments it received on the proposed rule change. The text of these statements may be examined at the places specified in Item IV below. The NYSE has prepared summaries, set forth in sections A, B, and C below, of the most significant aspects of such statements.

A. Self-Regulatory Organization's Statement of the Purpose of, and Statutory Basis for, the Proposed Rule Change

1. Purpose

The Exchange proposes to make certain changes to its rules, standards and procedures relating to debt securities. The changes are designed to facilitate the process for listing debt securities on the Exchange and to update certain rules and policies to conform to todays practices.

(a) Interest Payments. Paragraph 204.18 (Interest Payments) of the Listed Company Manual requires an issuer or its paying agent to notify the Exchange whenever it makes an interest payment. The obligation can be satisfied through the use of confirmation cards where that is appropriate. It also requires the issuer to notify the press and the Exchange whenever it does not meet its interest obligations. The Exchange proposes to delete the obligation to inform the Exchange of interest payments, whether by confirmation cards or otherwise.

Instead, the Exchange feels that reliance upon an issuer's obligation to report its failure to meet a payment obligation adequately protects the holders of debt securities. The Exchange is also proposing to add to the end of Paragraph 204.18 a cross-reference to 202.00, which reminds issuers that they are required to disclose material information (including the inability to meet payment obligations).

The Exchange believes that the issuer's obligation to report immediately to the press and the Exchange a failure to meet an interest payment or any unusual circumstance or condition relating to its ability to meet an interest payment makes the practice of mailing and collecting interest payment confirmation cards an administrative burden that is not necessary to the proper monitoring and surveillance of debt securities.

(b) Multiple Facsimile Signatures. Paragraph 501.06 (Bond Signatures) requires bonds to be executed, either manually or by facsimile machine, by two of the issuer's officers. Whether the issuer uses one facsimile signature (and one manual signature) or two facsimile signatures, the Exchange currently requires the issuer to submit an opinion

[1] 15 U.S.C. 78s(b)(1).

[2] In Amendment No. 1, the Exchange made technical corrections to the proposed rule change and clarified the purpose of the proposal. *See* Letter from James E. Buck, Senior Vice President and Secretary, NYSE, to Michael Walinskas, Deputy Associate Director, Division of Market Supervision, dated April 29, 1998 (''Amendment No. 1'').

of counsel that states that the use of each facsimile signature (a) is specifically authorized by (or at least is not inconsistent with) the issuer's charter or by-laws and the issue's indenture, and (b) is valid and effective under the laws of the state of the issuer's incorporation. In the case of the use of a single facsimile signature, the opinion of counsel must also state that the actual facsimile signature to be used has been duly adopted. In the case of the use of two facsimile signatures, the issuer is required to submit to the Exchange the board resolution adopting the actual signatures to be used.

The Exchange believes that it remains appropriate to subject an issuer's use of facsimile signatures to each of those requirements. However, the Exchange believes that it is not necessary to require the issuer to provide opinions of counsel and board resolutions to the Exchange in connection with those requirements.

The Exchange therefore proposes to continue to require issuers to authorize the use of facsimile signatures, to adopt the specific facsimile signatures to be used, to comply with charter, by-law and indenture provisions and to comply with state laws, but to discontinue the practice of requiring issuers to submit opinions of counsel and board resolutions in respect of those requirements. The Exchange believes that improvements in facsimile technology, increased acceptance of facsimile signatures in the business world and the streamlining of the listing process will justify the proposed updating of rules regulating the use of facsimile signatures.

(c) Discharge of Obligation upon Default of Funds. Paragraph 602.01 (Requirements for a Depository for Funds) and Subparagraph (D) of paragraph 703.06 each require, in part, that a debt security's indenture may not discharge the issuer's payment obligation if the funds representing payment are deposited with the trustee, depository or paying agent more than ten days before the date on which the funds become available to bond holders. The prohibition addresses the practice of depositing securities with the trustee in advance of a payment obligation as a way of satisfying a restrictive covenant where the indenture does not provide for prepayment.

The Exchange adopted those provisions to protect bondholders prior to the enactment of the Trust Indenture Act and the widespread use of early call provisions. However, the practice of advance security deposits is no longer in use. That plus (a) the protections afforded to bondholders by the Trust Indenture Act and (b) the fact that an issuer's defeasance does not normally discharge the issuer's payment obligation to the bondholder as set forth in the debt instrument have led the Exchange to believe that it is appropriate to remove the prohibition from the Listed Company Manual.

(d) Clearance of Terms. Subparagraph (B) (Clearance of Terms) of Paragraph 703.06 currently asks an issuer to submit the indenture and registration terms to the Exchange prior to applying to list the bond and to receive the Exchange's clearance of the terms of those documents before the company is permitted to use a ''listing intention statement'' in the offering prospectus. The Exchange no longer believes that early submission and prior clearance are necessary to the listing process and proposes to eliminate both requirements.

Today, in determining whether a bond qualifies for listing on the Exchange, the Exchange determines whether (a) the issuer's equity security is listed on the Exchange (in which case, the issue's debt securities qualify for listing) or (b) if the issuer does not list its equity security on the Exchange, a nationally recognized security rating organization has rated the debt issue no lower than a Standard & Poors' ''B'' rating or its equivalent. As a result, the Exchange no longer needs to pre-clear the issuer's financial statements and the like in determining whether the debt security qualifies for an Exchange listing. The one item that has required the Exchange to continue to review indenture terms has been the prohibition against defeasance discussed in paragraph (iii) above. However, by eliminating that requirement, the Exchange eliminates the last justification of its need to pre-clear indenture and registration terms. Of course, if an issuer is uncertain as to whether it will qualify for listing, it is welcome to contact the Exchange to discuss the issue's eligibility prior to engaging in the process of completing a listing application.

The Exchange also proposes to make some non-substantive changes to Subparagraph (B) that clarifies the remaining portions of that Subparagraph.

(e) *Delivery of Prospectus, Mortgage and/or Indenture.* Subparagraph (F) (Debt Securities Listing Application Supporting Documents) of Paragraph 703.06 currently requires the issuer to provide with its listing application four copies of a security's prospectus if the debt security has been issued for 12 months or less and to provide one copy of the prospectus if the debt security has been issued for more than 12 months. It also requires the issuer to provide one final copy of an issuer's mortgage or indenture.

The Exchange proposes to change those document delivery requirements if the issuer makes the document publicly available by means of a disclosure service (such as Disclosure, Inc.) that the Exchange finds satisfactory. If the document is available in that manner, the Exchange would no longer require the issuer to submit the final copy (in the case of a mortgage or indenture) and would require the issuer to submit only one copy of the prospectus, even if the debt security has been issued for 12 months or less.

The Exchange feels that modern technologies grant the Exchange ready and dependable access to documents and thereby reduce the need to require issuers to provide documents themselves.

(f) *Opinion of Counsel.* Subparagraph (G) (Opinion of Counsel) of Paragraph 703.06 currently requires the issuer to provide the Exchange with an opinion of counsel that verifies such things as the validity of the debt securities and the authorization for the issuance. While the Exchange continues to believe that the opinion plays an important role in the listing process, the Exchange believes that its physical possession of the opinion is not necessary in most cases. Specifically, the Exchange believes that an issuer's affirmation of the existence of the opinion of counsel will suffice for issues that a registered broker-dealer purchases from the issuer with a view toward resale, whether through an underwritten public offering or otherwise. (The Exchange would continue to require the submission of the opinion of counsel for Rule 144A offerings.) The Exchange proposes to amend Subparagraph (G) accordingly.

Substituting the affirmation for a copy of the opinion facilitates the listing process for issuers because it forestalls any need of the issuer to procure counsel's consent to share the opinion with the Exchange.

In addition, the Exchange believes that it is appropriate to eliminate certain of the items that it requires for inclusion in the opinion of counsel. Specifically, the Exchange believes that it is no longer necessary to require the opinion (a) to set forth the date, nature and status of orders or proceedings of regulatory authorities relating to the issuance of securities that are the subject of a listing application, (b) to state that the Board has authorized the issuing and listing of the securities, and (c) to disclose an affiliation of the counsel to the issuer.

The Exchange has rarely used or relied upon the opinion's description of regulatory proceedings. Its deletion would sacrifice little, while serving to simplify the opinion. In addition, the Exchange believes that the listing-application signature of an authorized officer of the issuer provides sufficient assurance of the board's authorization of the issue and of listing the issue on the Exchange.[3]

2. Statutory Basis

The basis under the Act for the proposed rule change is the requirement under Section 6(b)(5) that an exchange have rules that are designed to prevent fraudulent and manipulative acts and practices, to promote just and equitable principles of trade, to remove impediments to and perfect the mechanism of a free and open market and national market system, and, in general, to protect investors and the public interest.

B. Self-Regulatory Organization's Statement on Burden on Competition

The proposed rule change does not impose any burden on competition that is not necessary or appropriate in furtherance of the purposes of the Act.

C. Self-Regulatory Organization's Statement on Comments on the Proposed Rule Change Received From Members, Participants, or Others

The Exchange has not solicited, and does not intend to solicit, comments on the proposed rule change. The Exchange has not received any unsolicited written comments from members or other interested parties.

III. Date of Effectiveness of the Proposed Rule Change and Timing for Commission Action

Within 35 days of the date of publication of this notice in the **Federal Register** or within such longer period (i) as the Commission may designate up to 90 days of such date if it finds such longer period to be pro and publishes its reasons for so finding or (ii) as to which the self-regulatory organization consents, the Commission will:

(A) By order approve such proposed rule change, or

(B) Institute proceedings to determine whether the proposed rule change should be disapproved.

[3] As for the elimination of the requirement to disclose counsel's affiliation to the issuer, in Amendment No. 1, the NYSE stressed that in most cases issuers no longer would have to furnish the opinion of counsel. The Exchange notes that if it needed to request, review, and/or rely on an opinion, the NYSE could then inquire about the opinion's source and any relevant affiliations. *See* Amendment No. 1.

IV. Solicitation of Comments

Interested persons are invited to submit written data, views, and arguments concerning the foregoing, including whether the proposed rule change is consistent with the Act. Persons making written submissions should file six copies thereof with the Secretary, Securities and Exchange Commission, 450 Fifth Street, N.W., Washington, D.C. 20549. Copies of the submission, all subsequent amendments, all written statements with respect to the proposed rule change that are filed with the Commission, and all written communications relating to the proposed rule change between the Commission and any person, other than those that may be withheld from the public in accordance with the provisions of 5 U.S.C. 552, will be available for inspection and copying in the Commission's Public Reference Room. Copies of such filing will also be available for inspection and copying at the principal office of the NYSE. All submissions should refer to the File No. SR–NYSE–98–12 and should be submitted by June 3, 1998.

For the Commission, by the Division of Market Regulation, pursuant to delegated authority.[4]

Margaret H. McFarland,

Deputy Secretary.

[FR Doc. 98–12706 Filed 5–12–98; 8:45 am]

BILLING CODE 8010–01–M

[4] 17 CFR 200.30–3(a)(12).

SECURITIES AND EXCHANGE COMMISSION

[Release No. 34–39970; File No. SR–PCX–97–28]

Self-Regulatory Organizations; Pacific Exchange, Inc.; Order Granting Approval to Proposed Rule Change and Notice of Filing and Order Granting Accelerated Approval to Amendment No. 2 to the Proposed Rule Change Relating to Exchange-Sponsored Hand-Held Terminals for Options Floor Brokers

May 7, 1998.

I. Introduction

On July 3, 1997, and December 12, 1997, respectively, the Pacific Exchange, Inc. (''PCX'' or ''Exchange'') submitted to the Securities and Exchange Commission (''SEC'' or ''Commission''), pursuant to Section 19(b)(1) of the Securities Exchange Act of 1934 (''Act'')[1] and Rule 19b–4 thereunder,[2] a proposed rule change and Amendment No. 1 thereto to adopt rules to allow the use of Exchange-Sponsored Floor Broker Hand-Held Terminals (''Exchange-Sponsored Terminals'') on the floor of the Exchange. The Exchange also proposed an interpretation to Rule 6.67 which would not require members' orders entered through Exchange-Sponsored Terminals to be in writing. Finally, the Exchange proposed Rule 6.88(b) to prohibit the use of a floor broker hand-held terminal for market making. On March 30, 1998, the Exchange filed Amendment No. 2 to the proposed rule change with the Commission.[3] In Amendment No. 2, the Exchange amends Rule 6.67, Commentary .02 to indicate that orders sent through proprietary Terminals would also be deemed to be written orders for the purposes of Rule 6.67.

The proposed rule change, and Amendment No. 1 thereto were published for comment in the **Federal Register** on January 16, 1998.[4] No comments were received on the proposal. This order approves the proposal as amended, including Amendment No. 2 on an accelerated basis.

II. Description of the Proposal

A. General Description

The Exchange's Member Firm Interface (''MFI'')[5] currently permits Exchange Member Firms to use an electronic link with the Exchange to send their option orders directly to the Exchange for delivery to POETS (Pacific Option Exchange Trading System).[6] Under the proposal, member firms

[1] 15 U.S.C. 78s(b)(1).

[2] 17 CFR 240.19b–4.

[3] See Letter from Michael D. Pierson, Senior Attorney, Regulatory Policy PCX to David Sieradzki, Attorney, Division of Market Regulation (''Division''), SEC dated March 27, 1998 (''Amendment No. 2'').

[4] Securities Exchange Act Release No. 39532 (Jan. 9, 1998), 63 FR 2711 (Jan. 16, 1998).

[5] The MFI is an electronic order delivery and reporting system that allows member firms to route orders for execution by the automatic execution feature of POETS as well as to route limit orders to the Options Public Limit Order Book. Orders that do not reach those two destinations are defaulted to a member firm booth. MFI also provides member firms with instant confirmation of transactions to their systems. Member firms may access POETS by establishing an MFI mainframe-to-mainframe connection.

[6] Orders entered via MFI are delivered to one of three destinations: (a) To Auto-Ex, where they are automatically executed at the disseminated bid or offering price; (b) to Auto-Book, which maintains non-marketable limit orders based on limit price and time of receipt; or (c) to a Member Firm's default destination—a particular firm booth or remote entry site—if the order fails to meet the eligibility criteria necessary for either Auto-Ex or Auto-Book or if the Member Firm requests such default for its orders. See generally Exchange Act Release No. 27633 (Jan. 18, 1990), 55 FR 2466 (Jan. 24 1990) (''POETS Approval Order'').

would be able to use the MFI connection to route orders directly to the member firm booth (not by default) or to a floor broker's Exchange-Sponsored Terminal located in the trading crowd.[7] The Commission notes that the PCX's proposal does not restrict the use of other Hand-Held terminal systems provided that they do not interfere electronically with existing Exchange systems.[8]

Under the program, Member Firms will be permitted to send their orders electronically to the Exchange via MFI and route them to one of three destinations on the trading floor: (a) To a floor broker standing in the trading crowd; (b) to a Member Firm booth location on the trading floor; or (c) to POETS, where they will be automatically executed by Auto-Ex or maintained in Auto-Book. All orders so transmitted will first be sent through the PCX's system that stores and processes all data for the Exchange-Sponsored Terminals (''Server'').[9] Orders sent to a Member Firm booth via the Server may be sent subsequently either to POETS or to a floor broker in the trading crowd. Orders sent via the Server to a floor broker in the trading crowd may subsequently be transmitted to a Member Firm booth, to POETS, or to another floor broker on the trading floor.

The Exchange intends to furnish Exchange-Sponsored Terminals to be used by floor brokers under the program. In addition, the Exchange will supply booth devices that will have the capability to retrieve and display all orders that were submitted through the device. The Exchange intends to assess users a monthly rental fee for such use after the implementation of the floor-wide program in Phase II.[10]

Exchange rules on order representation and order execution will be unchanged under the program.[11] However, the Exchange is proposing to modify one of its rules on orders to provide that an order sent electronically through MFI will be deemed to be a ''written order'' for purposes of Rule 6.67. The order information that must be reported to the Exchange in connection with each transaction that is executed on the trading floor will be also unchanged under the program.[12]

Under the proposal, initially, floor brokers using Exchange-Sponsored Terminals will not need to write up order tickets because the trade-related floor broker terminal information will be passed electronically to POETS and then to POPS (Pacific Options Processing Information) for clearing purposes. Yet the party on the other side of the trade, if it is executed by a market maker or a floor broker not using a terminal, will have to submit a paper order ticket to the Exchange for processing. Later, when advancements in technology allow for it, no paper tickets will be required because all market makers and floor brokers will be able to interface with each other through Exchange-Sponsored Terminals.[13] The order ticket requirement shall be the same with Exchange-Sponsored Terminals as it is for proprietary hand held terminals,[14] *i.e.*, if the trade information is not sent to the Exchange electronically, it will have to be conveyed by means of a written order ticket.

Once an order has been executed, the Exchange-Sponsored Terminal system will route trade information to POETS, which, in turn, will route the information to a computer for trade match and clearing purposes. At the same time, the Exchange will send a trade report to the Member Firm that entered the order. In addition, the Exchange will transmit trade information to OCC, OPRA and certain vendors.

Order information sent through the Exchange Sponsored Terminal system will become audit trail information that is available to the Exchange for regulatory purposes. However, if an order is routed to the Member Firm booth by telephone or wire, and not through MFI, and the order is then sent to POETS or to a floor broker in the crowd using the Exchange-Sponsored Terminals, the audit trail information will commence when the order is sent from the booth. An audit trail of all actions taken by the Exchange-Sponsored Terminal that result in an interaction with the Server will be maintained. Upon receipt of an order in the Server from POETS or a booth device, the order will be time stamped and retained in the Server's database. When orders are executed at a Exchange-Sponsored Terminal, they will be time stamped upon receipt by the Server. Accordingly, the Exchange believes that the audit trail information should be more accurate than current information, which is recorded manually on order tickets.

The Exchange will not prohibit floor brokers from using proprietary hand-held terminals[15] for order entry on the Options Floor as long as they do not interfere with any Exchange-Sponsored Terminals, with POETS or with other equipment on the floor.[16]

B. Prohibition of Market Making Function

The Exchange is proposing to adopt new Rule 6.88(b) providing that no Floor Broker may knowingly use a Exchange-Sponsored Terminal, on a regular and continuous basis, to simultaneously represent orders to buy and sell options contracts in the same series for the account of the same beneficial holder. The rule further provides that if the Exchange determines that a person or entity has been sending, on a regular and continuous basis, orders to simultaneously buy and sell option contracts in the same series for the account of the same beneficial holder, the Exchange may prohibit orders for the account of such person or entity

[7] In that regard, the Exchange is proposing to add a new Rule 6.88(a), which provides: ''Members and Member Organizations may send orders electronically through the Exchange's Member Firm Interface and route them directly to POETS, to a Member Firm booth on the Options Floor, to a Floor Broker Hand-Held Terminal located on the Options Floor, or to any other location designated by the Exchange, provided that the Member or Member Organization has been approved by the Exchange to do so.''

[8] See note 16 *infra* and accompanying text.

[9] Accordingly, the Exchange stated that there will be no appreciable delay in order entry due to the transmission of orders through the Server. The Exchange also stated that if a Member Firm routes an order to POETS via MFI for automatic execution or maintenance in Auto-Book, the order will not be sent through the Server. Only orders to be transmitted through the Hand-Held Terminal system will be sent through the Server.

[10] The Exchange will submit a separate rule filing to the Commission to establish these fees. See note 19 *infra* and accompanying text.

[11] See, *e.g.*, PCX Rules 5.1(e), 6.43–6.48 and Options Floor Procedure Advices A–1—A–11 and G–1—G12.

[12] See PCX Rule 6.69.

[13] The Commission notes that the Exchange should consult with the Commission to determine if any future changes in technology used on the Exchange floor would be required to be submitted to the Commission pursuant to Section 19(b) of the Act. Moreover, any additional conditions or limitations placed on the use of hand held terminals should be submitted to the Commission as a proposed rule change pursuant to Section 19(b) of the Act. See *Interactive Brokers LLC*, Admin. Proc. File No. 3–9237 (March 19, 1998) (opinion of the Commission).

[14] See note 15 *infra*.

[15] The Commission notes that a rule filing to permit Exchange floor brokers to use proprietary order routing terminals on the Options Trading Floor is currently pending before the Commission. See Securities Exchange Act Release No. 38270 (Feb. 11, 1997), 62 FR 7286 (Feb. 18, 1997) (Notice of filing of SR–PSE–97–02).

[16] The term ''interfere'' refers to electronic interference that may occur between a member's proprietary device and another electronic system or piece of equipment on the Trading Floor. For example, if the use of a proprietary devise on the floor caused the POETS automatic execution to halt, or if it disrupted telephonic communications on the floor, or if it prevented another member firm from being able to receive electronic orders through another order-routing system, then the device causing the interference could not be used on the floor until it was rendered compatible with the order electronic systems in use.

from being sent through the Exchange's Member Firm Interface for such period of time as the Exchange deems appropriate.[17]

C. Implementation

The Exchange is proposing a two-phase approach to integrating the new hand-held technology into the floor environment. In Phase I, the Exchange will allow limited implementation of the program to evaluate the use of Exchange-Sponsored Terminals and to identify and correct any problems that may arise. In this regard, the Exchange will select a representative cross-section of floor members and off-floor members for the execution of various types of order flow in both lightly-traded and heavily-traded issues. Phase I will last for about four months. It will involve approximately two off-floor Member Firms, two Member Firm booth devices and 12 Exchange-Sponsored Terminals. The Exchange, in conjunction with its Options Floor Trading Committee, will select Members and Member Firms to participate in Phase I on an objective basis.[18] During Phase I, floor brokers will not be permitted to transmit orders to other floor brokers (they will be limited to transmitting orders either to POETS or to a Member Firm booth).

In Phase II, the Exchange will roll out the program on a floor-wide basis, allowing any qualified Floor Member or off-floor Member who wishes to participate in the program to do so.[19] When Phase II is implemented, the Exchange-Sponsored Terminals program will be fully rolled out. Exchange-Sponsored Terminals will be approved for use in all trading crowds and will allow floor brokers to transmit orders to other floor brokers.

III. Discussion

Section 6(b)(5) of the Act[20] requires that the rules of an exchange be designed to prevent fraudulent and manipulative acts and practices, promote just and equitable principles of trade, remove impediments to and perfect the mechanism of a free and open market, and in general to protect investors and the public interest. Section 6(b)(7) of the Act[21] requires that the rules of an Exchange be in accordance with Section 6(d) of the Act,[22] and in general that an Exchange provide a fair procedure for the disciplining of members and determining whether to prohibit or limit a person's access to services offered by the exchange. Section 6(b)(8) of the Act[23] requires that the rules of an exchange not impose any burden on competition not necessary or appropriate in furtherance of the purposes of the Act. Section 11A(a)(1)(C)(ii) of the Act[24] states that it is in the public interest and appropriate for the protection of investors and the maintenance of fair and orderly markets to assure fair competition among brokers and dealers. For the reasons set forth below, the Commission finds that the proposed rule change is consistent with the requirements of the Act and the rules and regulations thereunder applicable to a national securities exchange, and, in particular, the requirements of Sections 6(b)(5), 6(b)(7), 6(b)(8), and 11A(a)(1)(C) of the Act.[25]

The Commission believes that the Exchange's proposal should foster coordination with persons engaged in facilitating transactions in securities, remove impediments to and perfect the mechanism of a free and open market, and protect investors and the public interest by expediting and making more efficient the process by which members can receive and execute options orders on the floor of the Exchange. The proposal also will promote fair competition among brokers and dealers and facilitate transactions in options on the Exchange. Finally, for the reasons described in more detail below, the Commission believes that the market making prohibition on the use of the Exchange-Sponsored Terminals adequately balances the potential benefits to be derived from Exchange-Sponsored Terminals with the important regulatory issues that are raised in connection with the potential use of Exchange-Sponsored Terminals for market making.

As described above, proposed Rule 6.88(b) provides that no Floor Broker may knowingly use an Exchange-Sponsored Terminal, on a regular and continuous basis, to simultaneously represent orders to buy and sell options contracts in the same series for the account of the same beneficial holder. The Rule further provides that if the Exchange determines that a person or entity has been sending, on a regular and continuous basis, orders to simultaneously buy and sell option contracts in the same series for the account of the same beneficial holder, the Exchange may prohibit orders for the account of such person or entity from being sent through the Exchange's Member Firm Interface for such period of time as the Exchange deems appropriate.

The Commission finds that the market making restriction is consistent with the Act for the following reasons. The Commission believes that the PCX's restriction on market making through the use of Exchange-Sponsored Terminals has been effected in a clear and reasonable manner that is not ambiguous nor overbroad, and that takes into account regulatory and market impact concerns, including those relating to quote competition and price discovery.[26] Notably, the Exchange's proposal does not bar all two-sided limit orders. Instead it only restricts the acceptance of two-sided limit orders placed by the same beneficial holder in the performance of a market making function. The distinction between market making and brokerage activity is well established among market participants. Moreover, the language of proposed Rule 6.88(b) expressly restricts a floor broker from, on a regular and continuous basis, simultaneously representing orders to buy and sell options contracts in the same series for the account of the same beneficial holder, not the occasional entry of two-sided limit orders. This definition of

[17] The Commission notes that a member would have the right to appeal any decision to suspend a member from using an Exchange-Sponsored Terminal pursuant to Exchange Rule 11.7, *Hearings and Review of Committee Act.*

[18] Factors will include the nature of order flow (retail or institutional), the nature of the issue (lightly-traded or heavily-traded), nature of the floor brokerage operation, time of application, limitations in the number of participants who may participate, and other such factors.

[19] The term ''qualified Floor Member or off-floor Member'' refers to the requirement that all floor brokers and order flow providers who participate in the program must be approved by the Exchange to do so. Floor brokers are eligible to participate if they are registered with the Exchange as floor brokers pursuant to Rule 6.44 and have arranged with a member firm to receive order flow through the system. Member firms are eligible to participate in the program if they have made arrangements with a floor broker for the transmission and execution of orders. Moreover, after Phase II is implemented, the Exchange has represented that it intends to impose a fee upon participants in the program in an amount to be specified in a rule change proposal to be filed with the Commission under Section 19(b) of the Act.

[20] 15 U.S.C. 78f(b)(5).

[21] 15 U.S.C. 78f(b)(7).

[22] 15 U.S.C. 78f(d). Section 6(d) of the Act, among other things, require that an exchange, in any proceeding to determine whether a member should be disciplined, bring specific charges, notify such member of and provide him with an opportunity to defend himself against such charges, and keep a record.

[23] 15 U.S.C. 78f(b)(8).

[24] 15 U.S.C. 78k–1(a)(1)(C).

[25] In approving these rules, the Commission has considered the proposed rules' impact on efficiency, competition, and capital formation. 15 U.S.C. 78c(f).

[26] *Cf.*, Securities Exchange Act Release No. 25842 (June 23, 1988), 53 FR 24539 (approving certain restrictions on the use of telephones on the floor of the New York Stock Exchange), *aff'd per curiam*, 866 F.2d 47 (2d Cir. 1989).

market making activity is consistent with the definition of market maker under the Act which states that a market maker ''holds himself out as being willing to buy and sell [a] security for his own account on a regular or continuous basis.'' [27] Thus, the market making restriction on Exchange-Sponsored Terminal use for routing limit orders it he minimum necessary for the Exchange to bar Terminal use for off-floor market making.

Further, as the Commission has previously stated in approving market making restrictions similar to that being adopted by PCX, the Commission does not believe it unreasonable for a market to determine that the introduction of unregulated market making through floor brokerage hand held terminals may undermine its market maker system and potentially create disincentives for market makers to remain on an exchange trading floor.[28] Accordingly, any burden on competition that arguably exists from PCX's restriction on using Exchange-Sponsored Terminals for market making is, in the Commission's view, justified as reasonable and appropriate to ensure adequate regulation of the PCX market.[29]

The Exchange represents that it intends to implement the use of Exchange-Sponsored Terminals through the use of a two-phase approach. The Commission believes that it is consistent with the Act for the Exchange to limit the introduction of Exchange-Sponsored Terminals at this time given the Exchange's stated desire to identify and correct any problems that may arise. Further, the Exchange has stated that participants in Phase I will be selected on the basis of certain objective criteria.[30] The Commission notes that after the completion of Phase I, which the Exchange represents should last approximately four months, Phase II will begin, allowing any qualified Floor Member or off-floor member who wishes to participate in the program to do so.[31] As noted by the Exchange, all floor brokers that have registered with the Exchange as floor brokers pursuant to Rule 6.44 and have arranged with a member firm to receive order flow through the system will be eligible to participate in the Exchange-Sponsored Terminals program. The Commission expects the Exchange to allow any floor broker that meets the above requirements to participate in the program.

In addition, the Commission believes that the proposed interpretation to Rule 6.67, under which the transmission of an order that is received by means of an Exchange-Sponsored Terminal or proprietary hand-held terminal will be deemed to constitute a written order for the purposes of Rule 6.67, in general, protects investors and the public interest. The Commission believes the proposed commentary to Rule 6.67 will provide a more efficient means of communicating orders on the floor. The Commission notes that while this proposed Commentary effects the format of the order ticket, the Exchange has represented and the Commission expects that the required content of the order ticket would not be altered.[32]

Finally, regarding the use of proprietary hand-held terminal systems on the floor of the Exchange; the Exchange has represented that it intends to allow the use of proprietary hand-held terminal systems on the floor of the Exchange provided that they do not electronically interfere [33] with existing Exchange systems.[34] As discussed above, the Exchange notes that if, for example, the use of a proprietary devise on the floor caused the POETS automatic execution to halt, or if it disrupted telephonic communications on the floor, or if it prevented another member firm from being able to receive electronic orders through another order-routing system, then the device causing the interference could not be used on the floor until it was rendered compatible with the other electronic systems in use. The Commission finds that this restriction is reasonable given that it is limited to electronic interference with other exchange systems and that an interfering system would be permitted to return to the floor once it is made compatible with other exchange systems. The Commission notes that any implementation of this provision to restrict competition or the introduction of new technology onto the floor of the Exchange would be inconsistent with the Exchange's rules and with the Act. In summary, the Commission emphasizes and finds it very important that approval of the PCX's Exchange-Sponsored Terminals proposal will not restrict members from using their own proprietary terminal systems provided that they do not electronically interfere with existing Exchange systems.[35]

The Commission finds good cause for approving Amendment No. 2 to the proposed rule change prior to the thirtieth day after the date of publication of notice of filing thereof in the **Federal Register**. Amendment No. 2 amends the language in proposed Commentary .02 to Rule 6.67 to indicate that orders received through proprietary hand held terminals will be considered to be in writing for the purposes of Rule 6.67. Commentary .02, as originally proposed, applied only to Exchange-Sponsored Terminals. Amendment No. 2 ensures that all systems, whether Exchange sponsored or not will have the same regulatory requirements. As a result, the Commission does not believe that Amendment No. 2 raises any new regulatory issues. Further, the Commission notes that the original proposal was published for the full 21-day comment period and no comments were received by the Commission. Accordingly, the Commission believes there is good cause, consistent with Sections 6(b)(5) and 19(b) [36] of the Act, to approve Amendment No. 2 to the

[27] 15 U.S.C. 78c(a)(38).

[28] See Securities Exchange Act Release No. 38054 (Dec. 16, 1996), 61 FR 67365 (Dec. 20, 1996) (order approving SR–CBOE–95–48).

[29] While the Commission recognizes that there may be ways to address the regulatory issues presented by off-floor market making through the use of floor broker hand-held terminals, the Act does not dictate that any particular approach be taken. The Commission believes that the manner in which the Exchange has chosen to address the regulatory issues presented by off-floor market making reflects the considered judgment of the PCX regarding the attributes of Exchange membership and the organization of its trading floor, and is a fair exercise of its powers as a national securities exchange.

[30] See *supra* note 18.

[31] The term ''qualified Floor Member or off-floor Member'' refers to the requirement that all floor brokers and order flow providers who participate in the program must be approved by the Exchange to do so. Floor brokers are eligible to participate if they are registered with the Exchange as floor brokers pursuant to Rule 6.44 and have arranged with a member firm to receive order flow through the system. Member firms are eligible to participate in the program if they have made arrangements with a floor broker for the transmission and execution of orders. Moreover, after Phase II is implemented, program participants will be required to pay the Exchange a fee in an amount to be specified in a rule change proposal to be filed with the Commission.

[32] Telephone conversation between Michael D. Pierson, Senior Attorney, Regulatory Policy PCX and David Sieradzki, Attorney, Division, SEC on April 22, 1998. The Commission notes that any change to the required content of an order ticket would have to be submitted to the Commission as a proposed rule change under Section 19(b) of the Act.

[33] The term ''interfere'' refers to electronic interference that may occur between a member's proprietary device and another electronic system or piece of equipment on the Trading Floor.

[34] The Exchange has represented that this policy includes allowing Exchange members to interface electronically with MFI, POETS or the limit order book; provided that the proprietary system is properly configured to interface with these systems. Telephone conversation between Michael D. Pierson, Senior Attorney, Regulatory Policy, PCX and David Sieradzki, Attorney, Division, SEC on April 6, 1998.

[35] See *supra* note 16.

[36] 15 U.S.C. 78f(b)(5) and 15 U.S.C. 78s(b).

Exchange's proposal on an accelerated basis.

IV. Solicitation of Comments

Interested persons are invited to submit written data, views and arguments concerning Amendment No. 2 including whether the proposed rule change is consistent with the Act. Persons making written submissions should file six copies thereof with the Secretary, Securities and Exchange Commission, 450 Fifth Street, N.W., Washington, DC 20549. Copies of the submission, all subsequent amendments, all written statements with respect to the proposed rule change that are filed with the Commission, and all written communications relating to the proposed rule change between the Commission and any person, other than those that may be withheld from the public in accordance with the provisions of 5 U.S.C. 552, will be available for inspection and copying at the Commission's Public Reference Room. Copies of such filing will also be available for inspection and copying at the principal office of the above-mentioned self-regulatory organization. All submissions should refer to File No. SR–PCX–97–28 and should be submitted by June 3, 1998.

V. Conclusion

It is therefore ordered, pursuant to Section 19(b)(2) of the Act,[37] that the proposed rule change (SR–PCX–97–28) is approved as amended.

For the Commission, by the Division of Market Regulation, pursuant to delegated authority.[38]

Margaret H. McFarland,

Deputy Secretary.

[FR Doc. 98–12702 Filed 5–12–98; 8:45 am]

BILLING CODE 8010–01–M

SECURITIES AND EXCHANGE COMMISSION

[Release No. 34–39972; File No. SR–PHLX–98–20]

Self-Regulatory Organizations; Notice of Filing and Immediate Effectiveness of Proposed Rule Change By the Philadelphia Stock Exchange, Inc. To Adopt, on a Pilot Basis, a System Enhancement to the X-Station Electronic Book

May 7, 1998.

Pursuant to Section 19(b)(1) of the Securities Exchange Act of 1934 (''Act),[1] notice is hereby given that on April 24, 1998, the Philadelphia Stock Exchange, Inc. (''Phlx'' or ''Exchange'') filed with the Securities and Exchange Commission (''Commission'') the proposed rule change as described in Items I, II, and III below, which Items have been prepared by the Exchange. The Commission is publishing this notice to solicit comments on the proposed rule change from interested persons.

I. Self-Regulatory Organization's Statement of the Terms of Substance of the Proposed Rule Change

The Exchange, pursuant to Rule 19b–4 under the Act, proposes, as a six month pilot, to adopt a system enhancement to the X-Station electronic book on the options floor which matches incoming Automatic Execution System (''AUTO–X'') orders with orders residing on the specialist's book.

II. Self-Regulatory Organization's Statement of the Purpose of, and Statutory Basis for, the Proposed Rule Change

In its filing with the Commission, the Phlx included statements concerning the purpose of and basis for the proposed rule change and discussed any comments it received on the proposed rule change. The text of these statements may be examined at the places specified in Item IV below. The Phlx has prepared summaries, set forth in sections A, B, and C below, of the most significant aspects of such statements.

A. Self-Regulatory Organization's Statement of the Purpose of, and Statutory Basis for, the Proposed Rule Change

As described in Phlx Rule 1080, Comment .02, the electronic order book is an automated mechanism for specialists to hold and display orders based on price/time priority. The Exchange is currently preparing floor-wide deployment of the new X-Station electronic book on the options floor. The new X-Station provides certain improvements such as expedited non-AUTO–X order execution as well as expedited cancel replacement processing.

AUTO–X is the automatic execution feature of the Automated Options Market (''AUTOM'') System, the electronic order delivery and routing system for options orders. Currently, AUTO–X orders are executed against a ''shadow account'' for which the specialist is ultimately responsible. The execution is immediately reported back to the sending firm, and then, the specialist must manually input the contra-side interest representing the booked order that becomes due as a result of the AUTO–X trade.

At this time, the Phlx proposes to adopt, as a six month pilot, a system enhancement to the electronic book that matches incoming AUTO–X orders with booked orders. The proposed matching ability would allow the specialist to match these two participants directly, without the specialist participating in the trade, by dropping the order to manual status. The match would not be automatic, as the specialist must ensure that crowd participation under current parity/priority rules is not due before executing the trade; thus, the specialist must ''select'' the orders to execute the trade. Since the AUTO–X order has dropped to manual, the sending firm will not receive an execution report until the specialist selects and executes the trade.

The proposed enhancement affords specialists relief from the manual burden of inserting trade participant and clearing information by writing an order ticket for the booked order. Without the X-Station itself, the booked order appears on an actual order ticket, which the specialist submits for key punch entry. Thus, implementing the X-Station without the matching feature is more burdensome than the process required without the X-Station itself because it requires more ticket-writing. The proposed enhancement should reduce the amount of paper processed on the options floor. This in turn should reduce handling and processing time, including the likelihood of errors, thereby facilitating more prompt and accurate trade reporting.

For these reasons, the proposed rule change is consistent with Section 6 of the Act in general, and in particular, with Section 6(b)(5), in that it is designed to foster cooperation and coordination with persons engaged in regulating, clearing, settling, processing information with respect to, and facilitating transactions in securities, to remove impediments to and perfect the mechanism of a free and open market and a national market system, as well as to protect investors and the public interest by enhancing efficiency through automation in the market.

B. Self-Regulatory Organization's Statement on Burden on Competition

The Phlx does not believe that the proposed rule change will impose any inappropriate burden on competition.

---

[37] 15 U.S.C. 78s(b)(2).

[38] 17 CFR 200.30–3(a)(12).

[1] 15 U.S.C. 78s(b)(1).

C. Self-Regulatory Organization's Statement on Comments on the Proposed Rule Change Received From Members, Participants, or Others

No written comments were either solicited or received.

III. Date of Effectiveness of the Proposed Rule Change and Timing for Commission Action

The proposed rule change has become effective pursuant to Section 19(b)(3)(A) of the Act [2] and Rule 19b–4(e)(5) [3] thereunder. The proposal effects a change in an existing order-entry or trading system of a self-regulatory organization that: (i) does not significantly affect the protection of investors or the public interest; (ii) does not impose any significant burden on competition; and (iii) does not have the effect of limiting the access to or availability of the system.[4]

At any time within 60 days of the filing of the proposed rule change, the Commission may summarily abrogate such rule change if it appears to the Commission that such action is necessary or appropriate in the public interest, for the protection of investors, or otherwise in furtherance of the purposes of the Act.

IV. Solicitation of Comments

Interested persons are invited to submit written data, views, and arguments concerning the foregoing, including whether the proposed rule change is consistent with the Act. Persons making written submissions should file six copies thereof with the Secretary, Securities and Exchange Commission, 450 Fifth Street, N.W., Washington, D.C. 20549. Copies of the submission, all subsequent amendments, all written statements with respect to the proposed rule change that are filed with the Commission, and all written communications relating to the proposed rule change between the Commission and any person, other than those that may be withheld from the public in accordance with the provisions of 5 U.S.C. § 552, will be available for inspection and copying in the Commission's Public Reference Room. Copies of such filing will also be available for inspection and copying at the principal office of the Phlx. All submissions should refer to the File No. SR–PHLX–98–20 and should be submitted by June 3, 1998.

For the Commission, by the Division of Market Regulation, pursuant to delegated authority.[5]

Margaret H. McFarland,

Deputy Secretary.

[FR Doc. 98–12704 Filed 5–12–98; 8:45 am]

BILLING CODE 8010–01–M

[2] 15 U.S.C. 78s(b)(3)(A).

[3] 17 CFR 240.19b–4(e)(5).

[4] In reviewing this rule, the Commission has considered the proposed rule's impact on efficiency, competition, and capital formation. 15 U.S.C. 78c(f).

[5] 17 CFR 200.30–3(a)(12).

SECURITIES AND EXCHANGE COMMISSION

[Release No. 34–39964; File No. SR–Phlx–98–09]

Self-Regulatory Organizations; Notice of Filing of Proposed Rule Change by the Philadelphia Stock Exchange, Inc. To Revise Exchange Rule 1101A Relating To Index Options Strike Price Intervals

May 6, 1998.

Pursuant to Section 19(b)(1) of the Securities Exchange Act of 1934 (''Act''),[1] notice is hereby given that on February 5, 1998, the Philadelphia Stock Exchange, Inc. (''Exchange'' or ''Phlx'') filed with the Securities and Exchange Commission (''Commission'') the proposed rule change as described in Items, I, II, and III below, which Items have been prepared by the Exchange. The Commission is publishing this notice to solicit comments on the proposed rule change from interested persons.

I. Self-Regulatory Organization's Statement of the Terms of Substance of the Proposed rule Change

The Exchange seeks to amend Exchange rule 1101A(a), ''Terms of Option Contracts,'' to revise the strike (exercise) price intervals for index options. The proposal would change the intervals between index option strike prices to facilitate the prompt dissemination of quote information and to more accurately reflect the strike prices currently being listed.

Currently, Rule 1101A(a) establishes the strike price interval at $5, except: (i) where the strike price exceeds $500, the strike price interval may be $10; and (ii) where the strike price exceeds $1,000, the interval may be $20. The Exchange may also determine to list strike prices at wider intervals in ''out-of-the-money'' or far term series, generally $25, except: (i) where the strike price exceeds $500, the interval may be $50; and (ii) where the strike price exceeds $1,000, the interval may be $100. Also, where strike price intervals would be greater than $5, the Exchange may list alternative strike prices at $5 intervals in response to demonstrated customer interest or specialist request.

At this time, the Exchange is proposing an index option strike price interval of $5 for the three consecutive near-term months, $10 for the fourth month, and $30 for the fifth month. However, the Exchange will retain the ability to list alternative strike prices at $5 intervals in response to demonstrated customer interest or specialist request.

The text of the proposed rule change is available at the Office of the Secretary, the Exchange, and at the Commission.

II. Self-Regulatory Organization's Statement of the Purpose, of, and Statutory Basis for, the Proposed Rule Change

In its filing with the Commission, the Exchange included statements concerning the purpose of and basis for the proposed rule change and discussed any comments it received on the proposed rule change. The text of these statements may be examined at the places specified in Item IV below. The Exchange has prepared summaries, set forth in sections A, B, and C below, of the most significant aspects of such statements.

A. Self-Regulatory Organization's Statement of the Purpose of, and Statutory Basis for, the Proposed Rule Change

1. Purpose

During recent years, the number of new option products and total series listed by the national securities exchanges has increased dramatically, thereby increasing the number of continuous quote changes disseminated by the exchanges to the Options Price Reporting Authority (''OPRA''), and by OPRA to securities information vendors. In an effort to curb the growth of strike price dissemination and to more accurately reflect the strike prices currently being listed, the Exchange proposes to amend Exchange rule 1101A(a) to change the intervals between index option strike prices.

Currently, Exchange Rule 1101A(a) establishes a formula for strike price intervals which takes into consideration the index value and time remaining until expiration. The Rule establishes a strike price interval at $5, except: (i) where the strike price exceeds $500, the strike price interval may be $10; and (ii) where the strike price exceeds $1,000, the interval may be $20. The Exchange may also determine to list strike prices at wider intervals in ''out-of-the-money''

[1] 15 U.S.C. 78s(b)(1).

or far term series, generally $25, except: (i) where the strike price exceeds $500, the interval may be $50; and (ii) where the strike price exceeds $1,000, the interval may be $100. Also, where strike price intervals would be greater than $5, the Exchange may list alternative strike prices at $5 intervals in response to demonstrated customer interest or specialist request.

The Exchange's proposed rule change would establish new strike price intervals of: (i) $5 for the three consecutive near-term months; (ii) $10 for the fourth month; and (iii) $30 for the fifth month. However, the Exchange would retain the ability to list alternative strike prices at $5 intervals in response to demonstrated customer interest or specialist request, as well as to list strike prices at wider intervals. The Exchange believes the continued ability to add strike prices at alternative $5 intervals in response to customer interest will maintain flexibility in the marketplace and will preserve specific trading opportunities.

The current version of Exchange Rule 1101A(a) was adopted in 1996,[2] and was likewise intended to improve the Exchange's strike price dissemination policy. Based on its experience implementing Rule 1101A(a), the Exchange has determined to revise and simplify the Rule for easier administration. The Exchange believes the revised Rule will more accurately reflect the needs of the marketplace. Specifically, basing the strike price interval on an option's value (in the case of option greater than $500 or $1000) has not proven useful. The Exchange believes that widening the interval in far-term series should continue to reduce the number of outstanding series listed.

The Exchange also believes that listing far-term series and long-term options at wider strike price intervals should improve the efficiency of quotation dissemination and facilitate speedy pricing by reducing the number of listed strike prices. The Exchange believes the immediate effect should be a reduction in the number of index option strike prices. Furthermore, the Exchange believes it will experience a reduction in its systems capacity and usage as well as its operational burdens. For instance, strike prices currently occupy trading floor screen space and consume transmission line traffic to OPRA and outside vendors that disseminate Exchange trading information. Further, the role of the specialist in monitoring multitudes of strike prices should be enhanced.

2. Statutory Basis

The Exchange believes the proposed rule change is consistent with Section 6 of the Act,[3] in general, and with Section 6(b)(5),[4] in particular, in that it is designed to promote just and equitable principles of trade; foster cooperation and coordination with persons engaged in regulating, clearing, settling, processing information with respect to, and facilitating transactions in securities; and remove impediments to and perfect the mechanism of a free and open market and a national market system. The Exchange further believes that the proposed rule change will protect investors and the public interest by eliminating excess strike prices, thereby improving quotation dissemination capabilities, while maintaining investors' flexibility to better trailer index option trading to meet their investment objectives. According to the Exchange, the proposed rule change strikes a reasonable balance between reducing option series and accommodating the needs of investors.

B. Self-Regulatory Organization's Statement on Burden on Competition

The Exchange does not believe the proposed rule change will impose any inappropriate burden on completion.

C. Self-Regulatory Organization's Statement on Comments on the Proposed Rule Change Received From Members, Participants or Others

The Exchange did not solicit or receive written comments with respect to the proposed rule change.

III. Date of Effectiveness of Proposed Rule Change and Timing for Commission Action

Within 35 days of the date of publication of this notice in the **Federal Register** or within such longer period (i) as the Commission may designate up to 90 days of such date if it finds such longer period to be appropriate and publishes its reasons for so finding, or (ii) as to which the Exchange consents, the Commission will:

(A) by order approve the proposed rule change, or

(B) institute proceedings to determine whether the proposed rule change should be disapproved.

IV. Solicitation of Comments

Interested persons are invited to submit written date, views and arguments concerning the foregoing, including whether the proposed rule change is consistent with the Act. Persons making written submissions should file six copies thereof with the Secretary, Securities and Exchange Commission, 450 Fifth Street, N.W., Washington, D.C. 20549. Copies of the submissions, all subsequent amendments, all written statements with respect to the proposed rule change that are filed with the Commission, and all written communications relating to the proposed rule change between the Commission and any persons, other than those that may be withheld from the public in accordance with the provisions of 5 U.S.C. 552, will be available for inspection and copying in the Commission's Public Reference Section, 450 Fifth Street, N.W., Washington, D.C. 20549. Copies of such filing will also be available for inspection and copying at the principal office of the Exchange. All submissions should refer to File No. SR-Phlx–98–09 and should be submitted by June 3, 1998.

For the Commission by the Division of Market Regulations, pursuant to delegated authority.[5]

Margaret H. McFarland

Deputy Secretary.

[FR Doc. 98–12705 Filed 5–12–98; 8:45 am]

BILLING CODE 8010–01–M

[2] *See* Securities Exchange Act Release No. 37003 (Mar. 21, 1996), 61 FR 13913 (Mar. 28, 1996).

[3] 15 U.S.C. 78f.

[4] 15 U.S.C. 7f(b)(5).

[5] 17 CFR 200.30–3(a)(12).

DEPARTMENT OF STATE

[Public Notice No. 2819]

Bureau of Oceans and International Environmental and Scientific Affairs; Public Meeting on Preparations for an International Agreement Through the United Nations Environment Program on Persistent Organic Pollutants

SUMMARY: The United States government, through an interagency working group chaired by the U.S. Department of State, is preparing for negotiations through the United Nations Environment Program (UNEP) on a global agreement to address certain persistent organic pollutants that result in risks of a transboundary nature. The first negotiating session is scheduled to take place in Montreal, Canada, on June 29–July 3 this year. The Department of State will host a public meeting in advance of this session to outline issues likely to arise in the context of the negotiations. The meeting will take place on Wednesday, June 3 from 10:30–12:30 in Room 1912 of the U.S.

Department of State, 2201 C Street Northwest, Washington, D.C. to expedite their entrance into the building, attendees should provide Eunice Mourning (tel. 202–647–9266, fax 202–647–5947) with their date of birth and social security number by close of business on Monday, June 1. Attendees should enter at the ''C'' Street entrance and bring picture identification with them.

For further information, please contact Mr. Trigg Talley, U.S. Department of State, OES/ENV, Room 4325, 2201 C Street NW, Washington, D.C. 20520. Phone 202–647–5808, fax 202–647–5947.

Supplementary Information: The United States, through an interagency working group chaired by the U.S. Department of State, is preparing for negotiations through the U.N. Environment Programme (UNEP) on an agreement that will establish global controls on certain pollutants that, because of their physico-chemical properties, pose risks of a transboundary or global nature. These pollutants, which have been termed ''persistent organic pollutants'' in a number of international discussions, share four characteristics: they are toxic, persist in the environment for long periods of time, bioaccumulate in the fatty tissue of humans and animals, and are prone to long-distance transport. These pollutants are generally heavily controlled in the United States. Well-known examples of chemicals that exhibit these characteristics include dichlorodiphenyl trichloroethane (DDT), polychlorinated biphenyls (PCBs) and polychlorinated dibenzodioxins (PCDDs) and polychlorinated dibenzo-furans (PCDFs).

POPs have been linked to a variety of adverse effects on humans and wildlife, including immune and metabolic system dysfunction, neurological deficits, reproductive abnormalities, and cancer. POPs biomagnify through the food chain, and have been measured in fatty tissue (including in fish and marine mammals consumed by humans) at concentrations many orders of magnitude greater than those found in the surrounding environment. Because of these characteristics, several POPs continue to raise concerns decades after controls have been put into place in the United States. For example, DDT remains ubiquitous in the environment and human tissue twenty-five years after its control in the United States. Likewise, continuing PCB contamination led to fish advisories in watersheds in 34 U.S. states in 1995 (including the Great Lakes), some twenty years after initial controls.

Certain POPs also behave in a manner that can result in effects that are transboundary or global in nature. Many of these POPs are ''semi-volatile,'' meaning that they tend to vaporize at warmer temperatures and condense as the air gets cooler. Due to prevailing atmospheric circulation patterns, and the propensity of certain POPs for successive re-volatilization, there is evidence to support the systematic migration of such substances to cooler latitudes. Deposition in the Arctic region is particularly significant. POPs can also travel long distance through other mechanisms as well.

Studies have identified significant deposits of many of these chemicals in the tissues of fish, mammals, birds and humans in locations thousands of miles from any known source. Studies have in particular found deposits of a number of POPs in the Arctic environment where they have been measured at high levels in humans and wildlife. For certain native populations whose traditional diet is heavy in fish and marine mammals, measured levels of several POPs, including DDT and PCBs, approach or exceed levels of concern.

The United States and many other countries have already taken substantial action to address risks associated with the pollutants identified for action in international bodies. Nonetheless, certain of them remain in use and production in parts of the world, and there appears to be continuing transboundary deposition of a number of these chemicals. For example, analysis of DDT samples taken in North America suggest fairly recent deposition, probably from sources in the tropics.

In response to mounting evidence of potentially significant transboundary deposition of and exposure to these chemicals, the United States has for some time supported action on the most problematic POPs in several regional bodies, in addition to UNEP's work. In North America, the United Stats has been involved in efforts to address POPs risks through the Great Lakes Water Quality Agreement, as well as through the North American Agreement on Environmental Cooperation. Finally, the United States and over 50 other countries recently concluded negotiations on a protocol on persistent organic pollutants through the U.N. Economic Commission for Europe's Convention on Long-Range Transboundary Air Pollution (LRTAP). The protocol calls for prohibitions or restrictions on thirteen pesticides and commercial chemicals (DDT, PCBs, aldrin, dieldrin, endrin, toxaphene, mirex, hexachlorobenzene, heptachlor, chlordane, chlordecone, hexabromobipheny, and hexachlorocyclohexane); and controls on significant emissions from releases from stationary sources of four by-products of industrial processes (PCDDs, PCDFs, hexachlorobenzene and certain polycyclic aromatic hydrocarbons). All of these pollutants are subject to stringent controls in the United States. The agreement also establishes a mechanism for considering action on additional pollutants once the agreement comes into force. More information on this protocol and the LRTAP Convention can be found at http://www.unece.org.

Activities to Date through the U.N. Environment Program

The United States and other countries recognized several years ago that the global nature of POPs dispersion (and particularly continuing releases in different regions of the world) meant that regional activities would not be sufficient to fully address the problem. Accordingly, preparatory work was begun through UNEP and other technical organizations in 1995 toward global action to address some of the most harmful persistent organic pollutants. Countries identified twelve pollutants in particular for early assessment and global action.

The pollutants identified include nine pesticides, eight of which are banned for use in the United States (DDT, chlordane, aldrin, dieldrin, endrin, toxaphene, mirex, and hexachlorobenzene; the ninth, heptachlor, is severely restricted); PCBs, a family of industrial chemicals that are no longer produced in the United States but which remain in use in electrical equipment and other uses; and PCDDs and PCDFs, two toxic by by-products of combustion and other industrial processes.

Countries recognized that addressing these three different classes of POP will require different management approaches. For example, commercially produced POPs such as pesticides would be subject to use and production controls; in contrast, addressing PCDDs and PCDFs will require a variety of measures aimed at reducing releases of PCDDs into the environment. Finally, to the extent that there are significant stocks of PCB equipment as well as other POPs stockpiles, such stocks would need to be managed and disposed of in an environmentally sound manner.

In December 1995, 105 countries at the Washington Conference on Land-

Based Sources of Marine Pollution called for the development of a global legally binding instrument addressing the twelve substances, as well as the development of a procedure for consideration of additional pollutants in the future. An Ad Hock Working Group on POPs under the Intergovernmental Forum on Chemical Safety (IFCS), meeting in June 1996, also concluded that a global agreement was necessary, and issued a set of recommendations to the U.N. Environment Program regarding specific types of actions. In February 1997, the U.N. Environment Program authorized establishment of an international negotiating committee, to work on the basis of a negotiating mandate provided in UNEP Decision 19/13C. The Decision, which closely reflects the recommendations of the IFCS Ad Hock Working Group on POPs, can be found in full on the internet on the POPs Home Page, which can be accessed through UNEP's Chemicals Home Page (http://irptc.unep.ch). The POPs Home Page contains the IFCS recommendations and other information on POPs and related activities as well.

Among other things, countries represented in the U.N. Environment Program's Governing Council concluded that international action, including a global legally binding instrument, is required to reduce the risks to human health and the environment arising from the release of the twelve specific POPs. Countries decided that immediate international action should be initiated to protect human health and the environment through measures which will reduce and/or eliminate the emissions and discharges of the twelve POPs and, where appropriate, eliminate production and subsequently the remaining use of those POPs that are intentionally produced. Countries recognized that such action should include: use of separate, differentiated approaches to take action on pesticides, industrial chemicals, and unintentionally produced by-products and contaminants; use of transition periods, with phased implementation for various proposed actions; careful and efficient management of existing stocks of the specified persistent organic pollutants and, where necessary and feasible, their elimination; training in enforcement and monitoring of use to discourage the misuse of POP pesticides; and remediation of contaminated sites and environmental reservoirs, where feasible and practicable taking into account national and regional considerations in the light of the global significance of the problem.

The Decision calls for the U.N. Environment Program to prepare for and convene, together with the World Health Organization and other relevant international organizations, an intergovernmental negotiating committee, with a mandate to prepare an international legally binding instrument for implementing international action initially beginning with the twelve specified POPs and to take into account the conclusions and recommendations of the Ad Hoc Working Group on Persistent Organic Pollutants of the Intergovernmental Forum on Chemical Safety. It also notes the need to develop science-based criteria and a procedure for identifying additional persistent organic pollutants as candidates for future international action, and requests the intergovernmental negotiating committee to establish, at its first meeting, an expert group to carry out this work. It specifies that the group should work expeditiously, proceeding concurrently with the intergovernmental negotiating committee process, to develop criteria for consideration by the intergovernmental negotiating committee in the negotiation of a legally binding instrument. It specifies that the process should incorporate criteria pertaining to persistence, bioaccumulation, toxicity and exposure in different regions and should take into account the potential for regional and global transport including dispersion mechanisms for the atmosphere and the hydrosphere, migratory species and the need to reflect possible influences of marine transport and tropical climates. The Decision also calls for the U.N. Environment Program to undertake a variety of actions to lead to more effective ways of addressing specific aspects of POPs.

The Decision calls for negotiations to begin this year and to be completed by the year 2000. It is expected that negotiating sessions will occur every six months or so, with technical work occurring in the interim.

The Administration is preparing its position for this negotiation, and has scheduled a public meeting to be held on Wednesday, June 3 from 10:30 to 12:30 in Room 1912 of the U.S. Department of State. Members of the interagency working group will provide an overview of U.S. preparations for the first meeting. The U.S. Department of State is issuing this notice to help ensure that potentially affected parties are aware of and knowledgeable about these negotiations. In subsequent briefings, we will be contacting organizations that have expressed an interest by mail or fax. Those organizations that cannot attend the June 3 meeting, but wish to remain informed, should provide Mr. Trigg Talley of the Department of State (202–647–5808; tel. 202–647–5947 fax; LTalley@state.gov) with their address, and telephone and fax numbers.

Dated: May 8, 1998.

Trigg Talley,

Foreign Affairs Officer, Office of Environmental Policy.

[FR Doc. 98–12748 Filed 5–12–98; 8:45 am]

BILLING CODE 4710–09–M

DEPARTMENT OF TRANSPORTATION

Office of the Secretary

Reports, Forms and Recordkeeping Requirements; Agency Information Collection Activity Under OMB Review

AGENCY: Office of the Secretary, DOT.

ACTION: Notice.

SUMMARY: In compliance with the Paperwork Reduction Act of 1995 (44 U.S.C. 3501 *et seq.*), this notice announces that the Information Collection Requests (ICRs) abstracted below have been forwarded to the Office of Management and Budget (OMB) for review and approval. The ICRs describe the nature of the information collections and their expected burden. The **Federal Register** Notice with a 60-day comment period soliciting comments on the following information collection was published on February 19, 1998 [62 FR 8517].

DATES: Comments must be submitted on or before June 12, 1998.

FOR FURTHER INFORMATION CONTACT: Michael Robinson, NHTSA Information Collection Clearance Officer at (202) 366–9456.

SUPPLEMENTARY INFORMATION:

National Highway Traffic Safety Administration (NHTSA)

(1) Title: Assigning DOT code Numbers to Glazing Material Manufacturers.

OMB Control Number: 2127–0038.

Type Request: Extension of a currently approved collection.

Affected Public: Business or other for-profit.

Abstract: Title 49, Chapter 30115 of the U.S. Code specifies that the Secretary of Transportation shall require every manufacturer or distributor of a motor vehicle or motor vehicle equipment to furnish the distributor or dealer at the time of delivery certification that each item of motor

vehicle equipment conforms to all applicable Federal Motor Vehicle Safety Standards (FMVSS). Using this authority, the agency issued FMVSS No. 571.205, Glazing Materials. This standard specifies requirements for glazing materials for use in passengers cars, multipurpose passenger vehicle, trucks, buses, motorcycle, slide-in campers, and pickup covers designed to carry persons while in motion. Also, this standard specifies certification and marking of each piece of glazing materials. Certification for the items listed comes in the form of a label, tag or marking on the outside of the motor vehicle equipment and is permanently affixed and visible for the life of the motor vehicle equipment. The purpose of this standard is to aid in reducing injuries resulting from impact to glazing surfaces, and to ensure a necessary degree of transparency for driver visibility. Both glass and plastics are considered to be glazing materials which provide safety and minimize the possibility of occupants being thrown through the vehicle window in the event of an accident.

Estimated Annual Burden: 10.5 hours.

(2) Title: 49 CFR Part 566 Manufacturers' Identification.

OMB Control Number: 2127–0043.

Type Request: Extension of a currently approved collection.

Affected Public: Business or other for-profit.

Abstract: The National Highway Traffic Safety Administration's statute at 49 U.S.C. 30118 Notification of defects and noncompliance requires manufacturers to determine if the motor vehicle or item or replacement equipment contains a defect related to motor vehicle safety or fails to comply with an applicable Federal Motor Vehicle Safety Standard. Following such a determination, the manufacturer is required to notify the Secretary of Transportation, owners, purchasers and dealers of motor vehicles or replacement equipment, of the defect or noncompliance and to remedy the defect or noncompliance without charge to the owner. With this determination, NHTSA issued 49 CFR Part 566, Manufacturer Identification. Part 566 requires every manufacturer of motor vehicles and/or replacement equipment to file with the agency on a one time basis, the required information specified in Part 566.

Estimated Annual Burden: 25 hours.

(3) Title: Names and Addresses of First Purchasers of Motor Vehicles.

OMB Control Number: 2127–0044.

Type Request: Extension of a currently approved collection.

Affected Public: Business or other for-profit.

Abstract: 49 U.S.C. 30117 Providing information to, and maintaining records on, purchasers at subparagraph (b) Maintaining purchaser records and procedures states in part: A manufacturer of a motor vehicle or tire (except a retreaded tire) shall maintain a record of the name and address of the first purchasers of each vehicle or tire it produces and, to the extent prescribed by regulations of the Secretary, shall maintain a record of the name and address of the name and address of the first purchaser of replacement equipment (except a tire) that the manufacturer produces. This agency has no regulation specifying how the information is to be collected or maintained. When NHTSA's authorizing statute was enacted in 1966, Congress determined that an efficient recall of defective or noncomplying motor vehicles required the vehicle manufacturers to retain an accurate record of vehicle purchasers. By virtue of quick and easy access to this information, the manufacturer is able to quickly notify vehicle owners in the event of a recall. Experience with this statutory provision has shown that manufacturers have retained this information in a manner sufficient to enable them to expeditiously notify vehicle purchasers in case of a recall. Based on this experience, NHTSA has determined that no regulation is needed. Without this type of information readily available, manufacturers would either need to spend more time or money to notify purchasers of a recall.

Estimated Annual Burden: 950,000 hours.

(4) Title: 49 CFR Part 556, Petitions for Inconsequentiality.

OMB Control Number: 2127–0045.

Type Request: Extension of a currently approved collection.

Affected Public: Business or other for-profit.

Abstract: The National Highway Traffic Safety Administration's statute at 49 U.S.C. 30113 General exemptions at subsection (b) Authority to exempt and procedures, authorizes the Secretary of Transportation upon application of a manufacturer, to exempt the applicant from the notice and remedy requirements of 49 U.S.C. Charter 301, if the Secretary determines that the defect or noncompliance is inconsequential as it relates to motor vehicle safety. The notice and remedy requirements of Chapter 301 are set forth in 49 U.S.C. 30120 Remedies for defects and noncompliance. Those section require a manufacturer of motor vehicles or motor vehicle equipment to notify distributors, dealers and purchasers if any of the manufacturer's products are determined either to contain a safety-related defect or to fail to comply with an applicable Federal motor vehicle safety standard. The manufacturer is under a concomitant obligation to remedy such defects or noncompliance. NHTSA exercised this statutory authority to excuse inconsequential defects or noncompliance when it promulgated 49 CFR Part 556, Petitions for Inconsequentiality—this regulation establishes the procedures for manufacturers to submit such petitions to the agency will use in evaluating those petitions. Part 556 allows the agency to ensure that petitions filed under 15 U.S.C. 30113(b) are both properly substantiated and efficiently processed.

Estimated Annual Burden: 30 hours.

(5) Title: 49 CAR Section 571, 125-Warning Devices.

OMB Control Number: 2127–0506.

Type Request: Extension of a currently approved collection.

Affected Public: Business or other for-profit.

Abstract: 49 U.S.C. 30111, 30112 and 30117 (Appendix 1) of the National Traffic and Motor Vehicle Safety Act of 1966, authorizes the issuance of Federal Motor Vehicle Safety Standards (FMVSS). The Secretary is authorized to issue, amend, and revoke such rules and regulations as she/he deems necessary. Using this authority, the agency issued FMVSS No. 125, Warning Devices which applies to devices, without self contained energy sources, that are designed to be carried mandatorily in buses and trucks that have a gross vehicle weight rating (GVWR) greater than 10,000 pounds and voluntarily in other vehicles. These devices designed to be permanently affixed to the vehicle.

Estimated Annual Burden: 5.7 hours.

(6) Title: 49 CFR 571.218, Motorcycle Helmets (Labeling).

OMB Control Number: 2127–0518.

Type Request: Extension of a currently approved collection.

Affected Public: Federal, Local, State or Tribal Government, Business or other for-profit.

Abstract: The National Traffic and Motor Vehicle Safety statute at 49 U.S.C. Subchapter II Standards and Compliance, Sections 30111 and 30117 authorizes the issuance of Federal motor vehicle safety standards (FMVSS). The Secretary is authorized to issue, amend, and revoke such rules and regulations as he/she deems necessary. The Secretary is also authorized to require

manufacturers to provide information to first purchasers of motor vehicles or motor vehicle equipment when the vehicle or equipment is purchased, in a printed matter placed in the vehicle or attached to or accompanying the equipment. Using this authority, the agency issued the initial FMVSS No. 218, Motorcycle Helmets, in 1974. Motorcycle helmets are the devices used for protecting motorcyclists and other motor vehicle users in motor vehicle accidents. Federal Motor Vehicle Safety Standard No. 218 requires that each helmet shall be labeled permanently and legibly (S5.6), in a manner such that the label(s) can be read easily without removing padding or any other permanent part.

Estimated Annual Burden: 4,000 hours.

(7) Title: Replaceable Light Source Dimensional Information Collection, 49 CFR 54.

OMB Control Number: 2127–0563.

Type Request: Extension of a currently approved collection.

Affected Public: Business or other for-profit.

Abstract: Title 49 U.S.C. 322, 30111, 30115, 30117 and 30166, with delegation of authority at 49 CFR, 49 CFR 1.50, authorize the issuance of Federal Motor Vehicle Safety Standards (FMVSS) and the collection of data which supports their implementation. The agency, in prescribing an FMVSS, is to consider available relevant motor vehicle safety data, and to consult with other agencies as it deems appropriate. Further, the Title 49 U.S.C. mandates, that in issuing any FMVSS, the agency consider whether the standard is reasonable, practicable and appropriate for the particular type of motor vehicle or item of motor vehicle equipment for which it is prescribed, and whether such standards will contribute to carrying out the purpose of Title 49 U.S.C.

The Secretary is authorized to revoke such rules and regulations as deemed necessary to carry out this subchapter. Using this authority, the agency issued the initial FMVSS No. 108, Lamps, Reflective Devices, and Associated Equipment, specifying requirements for vehicle lighting for the purposes of reducing traffic accidents and their tragic result by providing adequate roadway illumination, improved a vehicle conspicuity, appropriate information transmission through signal lamps, in both day, night, and other conditions of reduced visibility. The standard has been amended numerous times in order to permit new headlighting designs. In recent years, the standard had become burdensome to bother regulators and regulated parties in the standard has not been able to fully accommodate the styling needs of motor vehicle designers, while at the same time assuring the safety on the highways. This resulted in numerous burdensome petitions for rulemaking to be submitted by the vehicle and lighting manufacturers to change the design restrictive language.

The reason for this burden was that as originally adopted the standard was more equipment design oriented, rather than performance oriented. Recent amendments have helped to rectify this situation. The requirement for replaceable light source dimensional information has resulted in a further extension of that effort to make the standard more performance oriented, and reduce the burden of petitioning for amendments to the standard. The standard now allows headlamp light sources (bulbs) that are specified in the standard as well as those listed in Part 564, to assure proper photometric performance upon replacement of the light sources upon failure of the original. The original manufacturer may be the same as that of the aftermarket replacement, consequently, headlamp bulbs regardless of where they are listed, are required to be standardized by inclusion of their interchangeability dimensions and other fit and photometric aspects, thus requiring all identical type bulbs to be manufactured to those pertinent interchangeability specifications. Implementation of Part 564 reduces the burden to manufacturers and user of new light sources by eliminating the 18 month petitioning process and substituting a 1 month agency review. Upon completion of the review, the new bulb's interchangeability information is listed in Part 564 and the new bulbs may be used 1 month later on new vehicles.

Estimated Annual Burden: 20 hours.

(8) Title: Compliance Labeling of Retroreflective Materials for

Heavy Trailer Conspicuity.

OMB Control Number: 2127–0569.

Type Request: Extension of a currently approved collection

Affected Public: Business or other for-profit.

Abstract: 49 U.S.C. 30111, 30112, and 30117 of the National Traffic and Motor Vehicle Safety Act of 1966 authorizes the issuance of Federal Motor Vehicle Safety Standards (FMVSS) and the collection of data which supports their implementation. The agency, in prescribing a FMVSS, is to consider available relevant motor vehicle safety data, and to consult with other agencies as it deems appropriate. Further, the Act mandates, that in issuing any FMVSS, the agency consider whether the standard is reasonable, practicable and appropriate for the particular type of motor vehicle or item of motor vehicle equipment for which it is prescribed, and whether such standards will contribute to carrying out the purpose of the Act. The Secretary is authorized to promulgate such rules and regulations as deemed necessary to carry out this subchapter. Using this authority, the agency issued the initial FMVSS No. 108, Lamps, Reflective Devices, and Associated Equipment, specifying requirements for vehicle lighting for the purpose of improved vehicle conspicuity, appropriate information transmission through signal lamps, in both day, night, and other conditions of reduced visibility. The standard has been amended numerous times, and the subject amendment, which became effective on December 1, 1993, increases the conspicuity of large trailers would be reduced by about 15 percent if retroreflective material having certain essential properties is used to mark the trailers. The amendment requires the permanent marking of the letters DOT–C2, DOT–C3 or DOT–C4 at least 3mm high at regular intervals on retroreflective sheeting material having adequate performance to provide effective trailer conspicuity. The high reflective brightness of the material and its ability to reflect light which strikes it at an angle are special properties required by the safety standard.

The high brightness is required because the material must be effective even when it is dirty. One of the principal goals of the standard is to prevent crashes in which the side of the trailer is blocking the road and it is not sufficiently visible at night to fast traffic. Frequently, the side of the trailer is not perpendicular to approaching traffic and the conspicuity material must reflect light which strikes it at an angle in order to be effective. There exist many types of retroreflective material similar in appearance to the required materials but lacking in its requisite properties. The manufacturers of new trailers are required to certify that their products are equipped with retroreflective material complying with the requirements of the standard. The Federal Highway Administration Office of Motor Carrier Safety enforces this and other standards through roadside inspections of trucks. There is no practical field test for the performance requirements, and labeling is the only objective way of distinguishing truck conspicuity grade material from lower

performance material. Without labeling, FHWA will not be able to enforce the performance requirements, and labeling is the only objective way of distinguishing truck conspicuity grade material from lower performance material. Without labeling, FHWA will not be able to enforce the performance requirements of the standard, and the compliance testing of new trailers will be complicated. Labeling is also important to small trailer manufacturers because it may help them to certify compliance. As a result of the comments to the NPRM, the agency decided to allow wider stripes of material of lower brightness than originally proposed as alternate means of providing the minimum safety performance.

Therefore, the marking system serves the additional role of identifying the minimum stripe width required for the retroreflective brightness of the particular material.

Estimated Annual Burden: 1 hour.

ADDRESSES: Send comments, within 30 days, to the Office of Information and Regulatory Affairs, Office of Management and Budget, 725–17th Street, NW., Washington, DC 20503, Attention DOT Desk Officer. Comments are invited on: whether the proposed collection of information is necessary for the proper performance of the functions of the Department, including whether the information will have practical utility; the accuracy of the Department's estimate of the burden of the proposed information collection; ways to enhance the quality, utility and clarity of the information to be collected; and ways to minimize the burden of the collection of information on respondents, including the use of automated collection techniques or other forms of information technology.

A comment to OMB is best assured of having its full effect if OMB receives it within 30 days of publication.

Issued in Washington, DC, on May 7, 1998.

Phillip A. Leach,

Clearance Officer, United States Department of Transportation.

[FR Doc. 98–12638 Filed 5–12–98; 8:45 am]

BILLING CODE 4910–62–P

DEPARTMENT OF TRANSPORTATION

Federal Aviation Administration

Noise Exposure Map Notice; Receipt of Noise Compatibility Program and Request for Review; Amarillo International Airport, Amarillo, TX

AGENCY: Federal Aviation Administration, DOT.

ACTION: Notice.

SUMMARY: The Federal Aviation Administration (FAA) announces its determination that the noise exposure maps submitted by the City of Amarillo for Amarillo International Airport under the provisions of Title 49 U.S.C., Chapter 475 (hereinafter referred to as ''Title 49'') and 14 CFR Part 150 are in compliance with applicable requirements. The FAA also announces that it is reviewing a proposed noise compatibility program that was submitted for the City of Amarillo under Part 150 in conjunction with the noise exposure maps and that this program will be approved or disapproved on or before October 27, 1998.

EFFECTIVE DATE: The effective date of the FAA's determination on the noise exposure maps and the start of its review of the associated noise compatibility program is April 30, 1998. The public comment period ends June 29, 1998.

FOR FURTHER INFORMATION CONTACT: Linda F. Stoltz, Department of Transportation, Federal Aviation Administration, Fort Worth Texas, 76193–0650, (817) 222–5608. Comments on the proposed noise compatibility program should also be submitted to the above office.

SUPPLEMENTARY INFORMATION: This notice announces that the FAA finds that the noise exposure maps submitted for the City of Amarillo are in compliance with applicable requirements of Part 150, effective April 30, 1998. Further, FAA is reviewing a proposed noise compatibility program for that airport which will be approved or disapproved on or before October 27, 1998. This notice also announces the availability of this program for public review and comment.

Under Title 49, an airport operator may submit to the FAA noise exposure maps which meet applicable regulations and which depict noncompatible land uses as of the date of submission of such maps, a description of projected aircraft operations, and the ways in which such operations will affect such maps. Title 49 requires such maps to be developed in consultation with interested and affected parties in the local community, government agencies, and persons using the airport.

An airport operator who has submitted noise exposure maps that are found by the FAA to be in compliance with the requirements of Federal Aviation Regulations (FAR) Part 150, promulgated pursuant to Title 49, may submit a noise compatibility program for FAA approval which sets forth the measures the operator has taken or proposes for the reduction of existing noncompatible uses and for the prevention of the introduction of additional noncompatible uses.

The City of Amarillo submitted to the FAA on December 16, 1997, noise exposure maps, descriptions and other documentation which were produced during the Amarillo International Airport FAR Part 150 Update. It was requested that the FAA review this material as the noise exposure maps, as described in Title 49, and that the noise mitigation measures, to be implemented jointly by the airport and surrounding communities, be approved as a noise compatibility program under Title 49.

The FAA has completed its review of the noise exposure maps and related descriptions submitted by the City of Amarillo. The specific maps under consideration are the Existing Noise Exposure Map, 1995, page C.36, and Future Noise Exposure Map, 2002, page G.4 in the submission.

The FAA has determined that these maps for Amarillo International Airport are in compliance with applicable requirements. This determination is effective on April 30, 1998. FAA's determination on an airport operator's noise exposure maps is limited to a finding that the maps were developed in accordance with the procedures contained in Appendix A of FAR Part 150. Such determination does not constitute approval of the applicant's data, information, or plans, or a commitment to approve a noise compatibility program or to fund the implementation of that program.

If questions arise concerning the precise relationship of specific properties to noise exposure contours depicted on a noise exposure map submitted under section 103 of the Act, it should be noted that the FAA is not involved in any way in determining the relative locations of specific properties with regard to the depicted noise contours, or in interpreting the noise exposure maps to resolve questions concerning, for example, which properties should be covered by the provisions of Title 49. These functions are inseparable from the ultimate land use control and planning responsibilities of local government. These local responsibilities are not changed in any way under Part 150 or through FAA's review of noise exposure maps. Therefore, the responsibility for the detailed overlaying of noise exposure contours onto the map depicting properties on the surface rests exclusively with the airport operator which submitted those maps, or with those public agencies and planning

agencies with which consultation is required under Title 49. The FAA has relied on the certification by the airport operator, under § 150.21 of FAR Part 150, that the statutorily required consultation has been accomplished.

The FAA has formally received the noise compatibility program for Amarillo International Airport, also effective on April 30, 1998. Preliminary review of the submitted material indicates that it conforms to the requirements for the submittal of noise compatibility programs, but that further review will be necessary prior to approval or disapproval of the program. The formal review period, limited by law to a maximum of 180 days, will be completed on or before October 27, 1998.

The FAA's detailed evaluation will be conducted under the provisions of 14 CFR Part 150, § 150.33. The primary considerations in the evaluation process are whether the proposed measures may reduce the level of aviation safety, create an undue burden on interstate or foreign commerce, or be reasonably consistent with obtaining the goal of reducing existing noncompatible land uses and preventing the introduction of additional noncompatible land uses.

Interested persons are invited to comment on the proposed program with specific reference to these factors. All comments, other than those properly addressed to local land use authorities, will be considered by the FAA to the extent practicable. Copies of the noise exposure maps, the FAA's evaluation of the maps, and the proposed noise compatibility program are available for examination at the following locations:

Federal Aviation Administration, Airports Division, 2601 Meacham Boulevard, Fort Worth, Texas 76137

Amarillo International Airport, 10801 Airport Boulevard, Amarillo, Texas 79111–1211

Questions may be directed to the individual named above under the heading, **FOR FURTHER INFORMATION CONTACT**.

Issued in Fort Worth, Texas, April 30, 1998.

Edward N. Agnew,

Acting Manager, Airports Division.

[FR Doc. 98–12741 Filed 5–12–98; 8:45 am]

BILLING CODE 4910–13–M

DEPARTMENT OF TRANSPORTATION

Federal Aviation Administration

Environmental Impact Statement: Piedmont Triad International Airport Greensboro, North Carolina

AGENCY: Federal Aviation Administration, DOT.

ACTION: Notice of Intent.

SUMMARY: The Federal Aviation Administration (FAA) intends to prepare an Environmental Impact Statement (EIS) to address environmental and related impacts expected to be associated with the expansion of Piedmont Triad International Airport located at Greensboro, North Carolina.

FOR FURTHER INFORMATION CONTACT: Thomas M. Roberts; Federal Aviation Administration; Atlanta Airports District Office; 1701 Columbia Avenue, Suite 2–260; College Park, Georgia 30337–2747; Telephone 404/305–7153.

SUPPLEMENTARY INFORMATION: The FAA will prepare an EIS for the proposed project to construct and operate a 9,000-foot parallel runway west of the existing runway 5/23 with associated taxiways and other related facilities. The proposed location of the new parallel runway is approximately 5,500 feet west of the existing 5/23 runway.

The FAA plans to coordinate with federal, state, and local agencies which have jurisdiction by law or special expertise with respect to any environmental impacts associated with the proposed project.

The EIS will also evaluate cumulative impacts anticipated to occur as a result of the implementation of other foreseeable future improvements at Piedmont Triad International Airport.

It is anticipated that a Request for Qualifications will be advertised in May of this year for a consultant to prepare the EIS.

Public Scoping: The FAA will hold a scoping meeting to solicit input from federal, state, and local agencies which have jurisdiction by law or have specific expertise with respect to any environmental impacts associated with the project. In addition a public scoping meeting will be held and the public may submit written comments on the scope of the environmental study to the address identified in the **FOR FURTHER INFORMATION CONTACT** paragraph. A Public Notice issued at a later time will provide the date, time, and place of the scoping meeting and the period for written comments.

Issued on April 30, 1998.

Dell T. Jernigan,

Manager, Atlanta Airports District Office.

[FR Doc. 98–12747 Filed 5–12–98; 8:45 am]

BILLING CODE 4910–13–M

DEPARTMENT OF TRANSPORTATION

Federal Aviation Administration

Notice of Intent To Rule on Application To Impose and Use the Revenue From a Passenger Facility Charge (PFC) at New Orleans International Airport, New Orleans, LA

AGENCY: Federal Aviation Administration (FAA), DOT.

ACTION: Notice of intent to rule on application.

SUMMARY: The FAA proposes to rule and invites public comment on the application to impose and use the revenue from a PFC at New Orleans International Airport under the provisions of the Aviation Safety and Capacity Expansion Act of 1990 (Title IX of the Omnibus Budget Reconciliation Act of 1990) (Pub. L. 101–508) and Part 158 of the Federal Aviation Regulations (14 CFR Part 158).

DATES: Comments must be received on or before June 12, 1998.

ADDRESSES: Comments on this application may be mailed or delivered in triplicate copies to the FAA at the following address: Mr. Ben Guttery, Federal Aviation Administration, Southwest Region, Airports Division, Planning and Programming Branch, ASW–610D, Fort Worth, Texas 76193–0610.

In addition, one copy of any comments submitted to the FAA must be mailed or delivered to Mr. Edward Levell, Jr., Director of Aviation, at New Orleans International Airport at the following address: Mr. Edward Levell, Jr., Director of Aviation, New Orleans International Airport, PO Box 20007, New Orleans, LA 70141.

Air carriers and foreign air carriers may submit copies of the written comments previously provided to the Airport under Section 158.23 of Part 158.

FOR FURTHER INFORMATION CONTACT: Mr. Ben Guttery, Federal Aviation Administration, Southwest Region, Airports Division, Planning and Programming Branch, ASW–610D, Fort Worth, Texas 76193–0610, (817) 222–5614.

The application may be reviewed in person at this same location.

SUPPLEMENTARY INFORMATION: The FAA proposes to rule and invites public

comment on the application to impose and use the revenue from a PFC at New Orleans International Airport under the provisions of the Aviation Safety and Capacity Expansion Act of 1990 (Title IX of the Omnibus Budget Reconciliation Act of 1990) (Public Law 101–508) and Part 58 of the Federal Aviation Regulations (14 CFR Part 158).

On April 30, 1998, the FAA determined that the application to impose and use the revenue from a PFC submitted by the Airport was substantially complete within the requirements of § 158.25 of Part 158. The FAA will approve or disapprove the application, in whole or in part, no later than August 19, 1998.

The following is a brief overview of the application.

Level of the proposed PFC: $3.00.

Proposed charge effective date: July 1, 2008.

Proposed charge expiration date: March 1, 2010.

Total estimated new PFC revenue: $11,072,644.

PFC application number: 98–04–C–00–MSY.

Brief description of proposed projects:

Project to Use PFC'S

Terminal Improvements.

Projects to Impose and Use PFC'S

LaFon Roads and Utilities and Upper Level Roadway Canopy.

Proposed class or classes of air carriers to be exempted from collecting PFC's:

FAR Part 135 On-demand air taxi/commercial operators.

Any person may inspect the application in person at the FAA office listed above under **FOR FURTHER INFORMATION CONTACT** and at the FAA regional Airports office located at: Federal Aviation Administration, Southwest Region, Airports Division, Planning and Programming Branch, ASW–610D, 2601 Meacham Blvd., Fort Worth, Texas 76193–4298.

In addition, any person may, upon request, inspect the application, notice and other documents germane to the application in person at New Orleans International Airport.

Issued in Fort Worth, Texas on April 30, 1998.

Edward N. Agnew,

Acting Manager, Airports Division.

[FR Doc. 98–12709 Filed 5–12–98; 8:45 am]

BILLING CODE 4910–13–M

DEPARTMENT OF TRANSPORTATION

Federal Highway Administration

[FHWA Docket No. 98–3763]

Request for Emergency Processing of Currently Approved Information Collection; Federal Motor Carriers Safety Regulations, Driver's Record of Duty Status

AGENCY: Federal Highway Administration (FHWA), DOT.

ACTION: Notice.

SUMMARY: In accordance with the Paperwork Reduction Act of 1995 (P.L. 104–13,44 U.S.C. 3501–3520), the FHWA is submitting a request to the Office of Management and Budget (OMB) for emergency processing clearance of a currently approved information collection. OMB clearance, for a six-month period, is being requested by May 31, 1998, when the current information collection is due to expire. The FHWA published its intent to request a three-year renewal to continue the current information collection in the **Federal Register** dated March 11, 1998, at 63 FR 11948. Comments to that notice are due on or before May 11, 1998. In addition, the FHWA published a Notice of proposed rulemaking (NPRM) relating to this information collection in the **Federal Register** dated April 20, 1998, at 63 FR 19457. This NPRM proposes to amend the FHWA regulations affecting the hours-of-service recordkeeping requirements. Comments to the NPRM are due on or before June 19, 1998.

FOR FURTHER INFORMATION CONTACT: A copy of the information collection clearance request may be obtained by contacting the DOT, FHWA Information Collection Liaison, Mr. Earl Coles, Office of Information and Management Services, Federal Highway Administration, 400 Seventh Street, SW., Washington, DC 20590-0001, (202)366–9084. Office hours are from 7:45 a.m. to 4:30 p.m., e.t., Monday through Friday, except Federal holidays.

SUPPLEMENTARY INFORMATION:

Title: Driver's Record of Duty Status.

OMB Number: 2125–0016.

Background: Motor carriers operating in interstate commerce are required to limit their drivers' hours of service. 49 CFR Section 395.8 requires that the drivers record their hours of service to assure compliance with the maximum driving and on-duty time limitations set forth in the Federal Motor Carrier Safety Regulations (FMCSRs). The record of duty status (RDS) is the primary regulatory tool used by Federal and State enforcement personnel and motor carriers to determine compliance with the maximum time limitations prescribed in the FMCSRs. Compliance with the hours of service requirement is a factor in determining a motor carrier's overall safety compliance rating. It is a valuable instrument to both government and industry to help ensure the safety of the general public by reducing the number of fatigued drivers on highways. This information collection is necessary for the FHWA to continue to determine compliance with the regulations.

Respondents: Motor carriers and drivers.

Number of Respondents: 3,300,000.

Frequency: Daily.

Estimated Total Annual Burden: 14,799,033.

Authority: 49 U.S.C 31136, 31141 and 31502 and 49 CFR 1.48.

Issued on: May 5, 1998.

Frederick G. Wright,

Acting Associate Administrator for Administration.

[FR Doc. 98–12637 Filed 5–12–98; 8:45 am]

BILLING CODE 4910–22–P

DEPARTMENT OF TRANSPORTATION

Surface Transportation Board

[STB Docket No. AB–55 (Sub-No. 562X)]

CSX Transportation, Inc.—Abandonment Exemption—in Rocky Mount, Nash County, NC

On April 23, 1998, CSX Transportation, Inc. (CSXT), filed with the Surface Transportation Board (Board) a petition under 49 U.S.C. 10502 for exemption from the provisions of 49 U.S.C. 10903 to abandon a portion of its Florence Service Lane, North End Subdivision, extending from Valuation Station 4+30 at Falls Road to Valuation Station 36+00 at the end of the track near Earl Street, which traverses U.S. Postal Service ZIP Code 27804, a distance of 0.60 miles, in Rocky Mount, Nash County, NC. CSXT indicates that there are no stations on the line.

The line does not contain federally granted rights-of-way. Any documentation in the railroad's possession will be made available promptly to those requesting it.

The interest of railroad employees will be protected by *Oregon Short Line R. Co.—Abandonment—Goshen,* 360 I.C.C. 91 (1979).

By issuance of this notice, the Board is instituting an exemption proceeding pursuant to 49 U.S.C. 10502(b). A final decision will be issued by August 11, 1998.

Any offer of financial assistance (OFA) under 49 CFR 1152.27(b)(2) will be due no later than 10 days after service of a decision granting the petition for exemption. Each OFA must be accompanied by a $1,000 filing fee. *See* 49 CFR 1002.2(f)(25).

All interested persons should be aware that, following abandonment of rail service and salvage of the line, the line may be suitable for other public use, including interim trail use. Any request for a public use condition under 49 CFR 1152.28 or for trail use/rail banking under 49 CFR 1152.29 will be due no later than June 2, 1998. Each trail use request must be accompanied by a $150 filing fee. *See* 49 CFR 1002.2(f)(27).

All filings in response to this notice must refer to STB Docket No. AB–55 (Sub-No. 562X) and must be sent to: (1) Surface Transportation Board, Office of the Secretary, Case Control Unit, 1925 K Street, N.W., Washington, DC 20423–0001; and (2) Charles M. Rosenberger, 500 Water Street—J150, Jacksonville, FL 32202.

Persons seeking further information concerning abandonment procedures may contact the Board's Office of Public Services at (202) 565–1592 or refer to the full abandonment or discontinuance regulations at 49 CFR part 1152. Questions concerning environmental issues may be directed to the Board's Section of Environmental Analysis (SEA) at (202) 565–1545. [TDD for the hearing impaired is available at (202) 565–1695.]

An environmental assessment (EA) (or environmental impact statement (EIS), if necessary) prepared by SEA will be served upon all parties of record and upon any agencies or other persons who commented during its preparation. Other interested persons may contact SEA to obtain a copy of the EA (or EIS). EAs in these abandonment proceedings normally will be made available within 60 days of the filing of the petition. The deadline for submission of comments on the EA will generally be within 30 days of its service.

Decided: May 5, 1998.

By the Board, David M. Konschnik, Director, Office of Proceedings.

Vernon A. Williams,

Secretary.

[FR Doc. 98–12589 Filed 5–12–98; 8:45 am]

BILLING CODE 4915–00–P

DEPARTMENT OF TRANSPORTATION

Surface Transportation Board

[STB Docket No. AB–414 (Sub-No. 2X)]

Iowa Interstate Railroad, Ltd.; Abandonment Exemption—In Marion County, IA

On April 23, 1998, Iowa Interstate Railroad, Ltd. (IAIS) filed with the Surface Transportation Board (Board) a petition under 49 U.S.C. 10502 for exemption from the provisions of 49 U.S.C. 10903 to abandon its line of railroad extending from milepost 123.5 near Otley to the end of the line at or near milepost 114.80 in Pella, a total distance of 8.70 miles in Marion County, IA. The lines traverse U.S. Postal Service Zip Codes 50214 and 50219, and includes the station at Pella (milepost 114).

The line does not contain federally granted rights-of-way. Any documentation in IAIS's possession will be made available promptly to those requesting it.

The interest of railroad employees will be protected by the conditions set forth in *Oregon Short Line R. Co.—Abandonment—Goshen,* 360 I.C.C. 91 (1979).

By issuance of this notice, the Board is instituting an exemption proceeding pursuant to 49 U.S.C. 10502(b). A final decision will be issued by August 11, 1998.

Any offer of financial assistance (OFA) under 49 CFR 1152.27(b)(2) will be due no later than 10 days after service of a decision granting the petition for exemption. Each OFA must be accompanied by a $1,000 filing fee. See 49 CFR 1002.2(f)(25).

All interested persons should be aware that, following abandonment of rail service and salvage of the line, the line may be suitable for other public use, including interim trail use. Any request for a public use condition under 49 CFR 1152.28 or for trail use/rail banking under 49 CFR 1152.29 will be due no later than June 2, 1998. Each trail use request must be accompanied by a $150 filing fee. See 49 CFR 1002.2(f)(27).

All filings in response to this notice must refer to STB Docket No. AB–414 (Sub-No. 2X) and must be sent to: (1) Surface Transportation Board, Office of the Secretary, Case Control Unit, 1925 K Street, N.W., Washington, DC 20423–0001; and (2) T. Scott Bannister, 1300 Des Moines Bldg., 405 Sixth Ave., Des Moines, IA 50309.

Persons seeking further information concerning abandonment procedures may contact the Board's Office of Public Services at (202) 565–1592 or refer to the full abandonment or discontinuance regulations at 49 CFR part 1152. Questions concerning environmental issues may be directed to the Board's Section of Environmental Analysis (SEA) at (202) 565–1545. [TDD for the hearing impaired is available at (202) 565–1695.]

An environmental assessment (EA) (or environmental impact statement (EIS), if necessary) prepared by SEA will be served upon all parties of record and upon any agencies or other persons who commented during its preparation. Other interested persons may contact SEA to obtain a copy of the EA (or EIS). EAs in these abandonment proceedings normally will be made available within 60 days of the filing of the petition. The deadline for submission of comments on the EA will generally be within 30 days of its service.

Decided: May 6, 1998.

By the Board, David M. Konschnik, Director, Office of Proceedings.

Vernon A. Williams,

Secretary.

[FR Doc. 98–12692 Filed 5–12–98; 8:45 am]

BILLING CODE 4915–00–P

DEPARTMENT OF TRANSPORTATION

Surface Transportation Board

[STB Docket No. AB–544X]

Sea Lion Railroad—Abandonment Exemption—In King County, WA

On April 23, 1998, Sea Lion Railroad, a/k/a Adventure Trail, Inc. (SLR) filed with the Surface Transportation Board (Board) a petition under 49 U.S.C. 10502 for exemption from the provisions of 49 U.S.C. 10903–10905 [1] to abandon a line of railroad between the end of the line at milepost 2.70 and milepost 0.09 in the Ballard District of Seattle, WA, a distance of approximately 3.00 miles, in King County, WA. The line traverses U.S. Postal Service Zip Codes 98107 and 98117. There are no existing rail stations.

The line contains federally granted rights-of-way. Any documentation in the railroad's possession will be made available promptly to those requesting it. The interest of railroad employees will be protected by the conditions set forth in *Oregon Short Line R. Co.—Abandonment—Goshen,* 360 I.C.C. 91 (1979).

[1] In addition to an exemption from 49 U.S.C. 10903, SLR seeks exemption from 49 U.S.C. 10904 (offer of financial assistance procedures) and 49 U.S.C. 10905 (public use conditions).

By issuance of this notice, the Board is instituting an exemption proceeding pursuant to 49 U.S.C. 10502(b). A final decision will be issued by August 11, 1998.

Any offer of financial assistance (OFA) under 49 CFR 1152.27(b)(2) will be due no later than 10 days after service of a decision granting the petition for exemption. Each OFA must be accompanied by a $1,000 filing fee. *See* 49 CFR 1002.2(f)(25).

All interested persons should be aware that, following abandonment of rail service and salvage of the line, the line may be suitable for other public use, including interim trail use. Any request for a public use condition under 49 CFR 1152.28 or for trail use/rail banking under 49 CFR 1152.29 will be due no later than June 2, 1998.[2] Each trail use request must be accompanied by a $150 filing fee. See 49 CFR 1002.2(f)(27).

All filings in response to this notice must refer to STB Docket No. AB–544X and must be sent to: (1) Surface Transportation Board, Office of the Secretary, Case Control Unit, 1925 K Street, N.W., Washington, DC 20423–0001, and (2) Charles H. Montange, 426 NW 162d Street, Seattle, WA 98177. Replies to the SLR petition are due on or before June 2, 1998.

Persons seeking further information concerning abandonment procedures may contact the Board's Office of Public Services at (202) 565–1592 or refer to the full abandonment or discontinuance regulations at 49 CFR part 1152. Questions concerning environmental issues may be directed to the Board's Section of Environmental Analysis (SEA) at (202) 565–1545. [TDD for the hearing impaired is available at (202) 565–1695.]

An environmental assessment (EA) (or environmental impact statement (EIS), if necessary) prepared by SEA will be served upon all parties of record and upon any agencies or other persons who commented during its preparation. Other interested persons may contact SEA to obtain a copy of the EA (or EIS). EAs in these abandonment proceedings normally will be available within 60 days of the filing of the petition. The deadline for submission of comments on the EA will generally be within 30 days of its service.

Decided: May 8, 1998.

By the Board, David M. Konschnik, Director, Office of Proceedings.

Vernon A. Williams,

Secretary.

[FR Doc. 98–12818 Filed 5–12–98; 8:45 am]

BILLING CODE 4915–00–P

[2] In the petition, SLR indicates that it consents to a request by the City of Seattle for issuance of a notice of interim trail use/rail banking. SLR adds that, once the City has acquired the line for trail use/rail banking by means of transfer from petitioner, Ballard Terminal Railroad Company will operate the line under contract with the City pursuant to a modified certificate of public convenience and necessity. We note, however, that a modified certificate is issued however, only when a state or political subdivision of a state acquires an abandoned line with the intent to provide rail service itself or to contract with an operator for such service. Trail use and rail banking are normally not contemplated under such a procedure. SLR's apparent intent here to transfer the line to the City for continued rail service. The use of rail banking to transfer a line for continued rail service appears questionable.

DEPARTMENT OF THE TREASURY

Office of the Comptroller of the Currency

Proposed Information Collection; Comment Request

AGENCY: Office of the Comptroller of the Currency (OCC), Treasury.

ACTION: Notice and request for comment.

SUMMARY: The OCC, as part of its continuing effort to reduce paperwork and respondent burden, invites the general public and other Federal agencies to take this opportunity to comment on continuing information collections, as required by the Paperwork Reduction Act of 1995. Currently, the OCC is soliciting comment concerning its extension without change of an information collection titled (MA)—Minimum Security Devices and Procedures, Reports of Suspicious Activities, and Bank Secrecy Act Compliance Program (12 CFR part 21).

DATES: Written comments should be submitted by July 13, 1998.

ADDRESSES: Direct all written comments to the Communications Division, Attention: 1557–0180, Third Floor, Office of the Comptroller of the Currency, 250 E Street, SW, Washington, DC 20219. In addition, comments may be sent by facsimile transmission to (202)874–5274, or by electronic mail to REGS.COMMENTS@OCC.TREAS.GOV.

FOR FURTHER INFORMATION CONTACT: Requests for additional information or copies of the collection may be obtained by contacting Jessie Gates or Camille Dickerson, (202)874–5090, Legislative and Regulatory Activities Division (1557–0180), Office of the Comptroller of the Currency, 250 E Street, SW, Washington, DC 20219.

SUPPLEMENTARY INFORMATION:

Title: (MA)—Minimum Security Devices and Procedures, Reports of Suspicious Activities, and Bank Secrecy Act Compliance Program (12 CFR 21).

OMB Number: 1557–0180.

Form Number: None.

Abstract: The collections of information contained in 12 CFR Part 21 are as follows:

Minimum Security Devices and Procedures (12 CFR 21.2 and 21.4)

Under 12 CFR 21.2, each national bank must designate a security officer. The bank security officer must develop a written security program to protect the bank from robberies, burglaries, and larcenies.

Under 12 CFR 21.4, the bank security officer must report annually to the bank's board of directors on the effectiveness of the bank's security program. The substance of the report must be reflected in the minutes of the board meeting in which the report is presented.

Suspicious Activity Reports (SAR)(12 CFR 21.11)

Under 12 CFR 21.11, national banks must file SARs in certain instances. The bank must retain the SAR and the original of any related documentation for five years.

Procedures for Monitoring Bank Secrecy Act Compliance (12 CFR 21.21)

Under 12 CFR 21.21, national banks must develop and maintain procedures to assure compliance with the Bank Secrecy Act and Treasury regulations at 31 CFR part 31.

These information collection requirements are required to ensure compliance with applicable statutes, further bank safety and soundness, provide protections for banks, and further public policy interests.

Type of Review: Extension, without change, of a currently approved collection.

Affected Public: Businesses or other for-profit.

Number of Respondents: 3,000.

Total Annual Responses: 45,527.

Frequency of Response: On occasion.

Total Annual Burden: 30,160 Hours.

COMMENTS: Comments submitted in response to this notice will be summarized and included in the request for OMB approval. All comments will become a matter of public record. Comments are invited on:

(a) Whether the collection of information is necessary for the proper performance of the functions of the agency, including whether the information has practical utility;

(b) The accuracy of the agency's estimate of the burden of the collection of information;

(c) Ways to enhance the quality, utility, and clarity of the information to be collected;

(d) Ways to minimize the burden of the collection on respondents, including through the use of automated collection techniques or other forms of information technology; and

(e) Estimates of capital or startup costs and costs of operation, maintenance, and purchase of services to provide information.

Dated: May 6, 1998.

Karen Solomon,

Director, Legislative & Regulatory Activities Division.

[FR Doc. 98–12622 Filed 5–12–98; 8:45 am]

BILLING CODE 4810–33–P

DEPARTMENT OF THE TREASURY

Office of the Comptroller of the Currency

Information Collection; Submission for OMB Review; Comment Request

AGENCY: Office of the Comptroller of the Currency, Treasury.

ACTION: Submission for OMB review; comment request.

SUMMARY: In accordance with the requirements of the Paperwork Reduction Act of 1995 (44 U.S.C. Chapter 35), the Office of the Comptroller of the Currency (OCC) hereby gives notice that it has sent to the Office of Management and Budget (OMB) for review proposed revisions to an information collection titled Examination Questionnaire.

DATES: Comments regarding this information collection are welcome and should be submitted to the OMB Reviewer and the OCC. Comments are due on or before June 12, 1998.

ADDRESSES: A copy of the submission may be obtained by calling the OCC Contact listed. Direct all written comments to the Communications Division, Attention: 1557–0199, Third Floor, Office of the Comptroller of the Currency, 250 E Street, SW., Washington, DC 20219. In addition, comments may be sent by facsimile transmission to (202) 874–5274, or by electronic mail to REGS.COMMENTS@OCC.TREAS.GOV.

SUPPLEMENTARY INFORMATION:

OMB Number: 1557–0199.

Form Number: CC–2000–01 (Rev) and CC–2000–02 (Rev).

Type of Review: Revision.

Title: Examination Questionnaire.

Description: This notice covers a revision of a currently approved collection of information titled Examination Questionnaire. Completed Examination Questionnaires provide the OCC with information needed to properly evaluate the effectiveness of the examination process and agency communications. The OCC will use the information to identify problems or trends that may impair the effectiveness of the examination process, to identify ways to improve its service to the banking industry, and to analyze staff and training needs.

There are two versions of the questionnaire—one for community and mid-sized banks and one for large banks. Community and mid-sized banks will receive the questionnaire as part of each safety and soundness examination or other examination-related activity. Large banks will be invited to provide comments annually.

Respondents: Businesses or other for-profit.

Number of Respondents: 2,600.

Total Annual Responses: 3,900.

Frequency of Response: On occasion.

Estimated Total Annual Burden: 650 burden hours.

OCC Contact: Jessie Gates or John Ference, (202) 874–5090, Legislative and Regulatory Activities Division, Office of the Comptroller of the Currency, 250 E Street, SW., Washington, DC 20219.

OMB Reviewer: Alexander Hunt, (202) 395–7340, Paperwork Reduction Project 1557–0199, Office of Management and Budget, Room 10226, New Executive Office Building, Washington, DC 20503.

The OCC may not conduct or sponsor, and respondent is not required to respond to, an information collection that has been extended, revised, or implemented on or after October 1, 1995, unless it displays a currently valid OMB control number. Comments are invited on:

(1) Whether the proposed revisions to the following collections of information are necessary for the proper performance of the OCC's functions, including whether the information has practical utility;

(2) The accuracy of the OCC's estimate of the burden of the information collection as it is proposed to be revised;

(3) Ways to enhance the quality, utility, and clarity of the information to be collected;

(4) Ways to minimize the burden of information collection on respondents, including through the use of automated collection techniques or other forms of information technology; and

(5) Estimates of capital or startup costs and costs of operation, maintenance, and purchase of services to provide information.

Dated: May 6, 1998.

Karen Solomon,

Director, Legislative & Regulatory Activities Division.

[FR Doc. 98–12624 Filed 5–12–98; 8:45 am]

BILLING CODE 4810–33–P

DEPARTMENT OF THE TREASURY

Internal Revenue Service

[LR–77–86]

Proposed Collection; Comment Request for Regulation Project

AGENCY: Internal Revenue Service (IRS), Treasury.

ACTION: Notice and request for comments.

SUMMARY: The Department of the Treasury, as part of its continuing effort to reduce paperwork and respondent burden, invites the general public and other Federal agencies to take this opportunity to comment on proposed and/or continuing information collections, as required by the Paperwork Reduction Act of 1995, Public Law 104–13 (44 U.S.C. 3506(c)(2)(A)). Currently, the IRS is soliciting comments concerning an existing temporary regulation, LR–77–86 (TD 8124), Certain Elections Under the Tax Reform Act of 1986 (§ 5h.5).

DATES: Written comments should be received on or before July 13, 1998, to be assured of consideration.

ADDRESSES: Direct all written comments to Garrick R. Shear, Internal Revenue Service, room 5571, 1111 Constitution Avenue NW., Washington, DC 20224.

FOR FURTHER INFORMATION CONTACT: Requests for additional information or copies of the regulation should be directed to Carol Savage, (202) 622–3945, Internal Revenue Service, room 5569, 1111 Constitution Avenue NW., Washington, DC 20224.

SUPPLEMENTARY INFORMATION:

Title: Certain Elections Under the Tax Reform Act of 1986.

OMB Number: 1545–0982.

Regulation Project Number: LR–77–86.

Abstract: Section 5h.5 (a) of this regulation sets forth general rules for the time and manner of making varioius elections under the Tax Reform Act of 1986. The regulation enables taxpayers to take advantage of various benefits provided by the Internal Revenue Code.

Current Actions: There is no change to this existing regulation.

Type of Review: Extension of OMB approval.

Affected Public: Individuals or households, business or other for-profit organizations, not-for-profit institutions, farms, and state, local, or tribal governments.

Estimated Number of Responses: 114,710.

Estimated Time Per Response: 15 minutes.

Estimated Total Annual Burden Hours: 28,678.

The following paragraph applies to all of the collections of information covered by this notice:

An agency may not conduct or sponsor, and a person is not required to respond to, a collection of information unless the collection of information displays a valid OMB control number. Books or records relating to a collection of information must be retained as long as their contents may become material in the administration of any internal revenue law. Generally, tax returns and tax return information are confidential, as required by 26 U.S.C. 6103.

REQUEST FOR COMMENTS: Comments submitted in response to this notice will be summarized and/or included in the request for OMB approval. All comments will become a matter of public record. Comments are invited on: (a) Whether the collection of information is necessary for the proper performance of the functions of the agency, including whether the information shall have practical utility; (b) the accuracy of the agency's estimate of the burden of the collection of information; (c) ways to enhance the quality, utility, and clarity of the information to be collected; (d) ways to minimize the burden of the collection of information on respondents, including through the use of automated collection techniques or other forms of information technology; and (e) estimates of capital or start-up costs and costs of operation, maintenance, and purchase of services to provide information.

Approved: May 8, 1998.

Garrick R. Shear,

IRS Reports Clearance Officer.

[FR Doc. 98–12723 Filed 5–12–98; 8:45 am]

BILLING CODE 4830–01–U

DEPARTMENT OF THE TREASURY

Internal Revenue Service

[REG–209020–86]

Proposed Collection; Comment Request for Regulation Project

AGENCY: Internal Revenue Service (IRS), Treasury.

ACTION: Notice and request for comments.

SUMMARY: The Department of the Treasury, as part of its continuing effort to reduce paperwork and respondent burden, invites the general public and other Federal agencies to take this opportunity to comment on proposed and/or continuing information collections, as required by the Paperwork Reduction Act of 1995, Public Law 104–13 (44 U.S.C. 3506(c)(2)(A)). Currently, the IRS is soliciting comments concerning an existing notice of proposed rulemaking and temporary regulation, REG–209020–86 (TD 8210), Foreign Tax Credit; Notification and Adjustment Due to Foreign Tax Redeterminations (§§ 1.905–3T, 1.905–4T, 1.905–5T and 301.6689–1T).

DATES: Written comments should be received on or before July 13, 1998, to be assured of consideration.

ADDRESSES: Direct all written comments to Garrick R. Shear, Internal Revenue Service, room 5571, 1111 Constitution Avenue NW., Washington, DC 20224.

FOR FURTHER INFORMATION CONTACT: Requests for additional information or copies of the regulation should be directed to Carol Savage, (202) 622–3945, Internal Revenue Service, room 5569, 1111 Constitution Avenue NW., Washington, DC 20224.

SUPPLEMENTARY INFORMATION:

Title: Foreign Tax Credit; Notification and Adjustment Due to Foreign Tax Redeterminations.

OMB Number: 1545–1056.

Regulation Project Number: REG–209020–86 (formerly INTL–61–86).

Abstract: This regulation relates to a taxpayer's obligation under section 905(c) of the Internal Revenue Code to file notification of a foreign tax redetermination, to make adjustments to a taxpayer's pools of foreign taxes and earnings and profits, and the imposition of the civil penalty for failure to file such notice or report such adjustments.

Current Actions: There is no change to this existing regulation.

Type of Review: Extension of a currently approved collection.

Affected Public: Individuals, and business or other for-profit organizations.

Estimated Number of Respondents: 10,000.

Estimated Time Per Respondent: 1 hour.

Estimated Total Respondents : 10,000.

The following paragraph applies to all of the collections of information covered by this notice:

An agency may not conduct or sponsor, and a person is not required to respond to, a collection of information unless the collection of information displays a valid OMB control number. Books or records relating to a collection of information must be retained as long as their contents may become material in the administration of any internal revenue law. Generally, tax returns and tax return information are confidential, as required by 26 U.S.C. 6103.

REQUEST FOR COMMENTS: Comments submitted in response to this notice will be summarized and/or included in the request for OMB approval. All comments will become a matter of public record. Comments are invited on: (a) Whether the collection of information is necessary for the proper performance of the functions of the agency, including whether the information shall have practical utility; (b) the accuracy of the agency's estimate of the burden of the collection of information; (c) ways to enhance the quality, utility, and clarity of the information to be collected; (d) ways to minimize the burden of the collection of information on respondents, including through the use of automated collection techniques or other forms of information technology; and (e) estimates of capital or start-up costs and costs of operation, maintenance, and purchase of services to provide information.

Approved: May 7, 1998.

Garrick R. Shear,

IRS Reports Clearance Officer.

[FR Doc. 98–12724 Filed 5–12–98; 8:45 am]

BILLING CODE 4830–01–U

DEPARTMENT OF THE TREASURY

Internal Revenue Service

[REG–209274–85]

Proposed Collection; Comment Request for Regulation Project

AGENCY: Internal Revenue Service (IRS), Treasury.

ACTION: Notice and request for comments.

SUMMARY: The Department of the Treasury, as part of its continuing effort to reduce paperwork and respondent burden, invites the general public and

other Federal agencies to take this opportunity to comment on proposed and/or continuing information collections, as required by the Paperwork Reduction Act of 1995, Public Law 104–13 (44 U.S.C. 3506(c)(2)(A)). Currently, the IRS is soliciting comments concerning an existing notice of proposed rulemaking and temporary regulations, REG–209274–85 (TD 8033), Tax-Exempt Entity Leasing (§ 1.168).

DATES: Written comments should be received on or before July 13, 1998 to be assured of consideration.

ADDRESSES: Direct all written comments to Garrick R. Shear, Internal Revenue Service, room 5571, 1111 Constitution Avenue NW., Washington, DC 20224.

FOR FURTHER INFORMATION CONTACT: Requests for additional information or copies of the regulations should be directed to Carol Savage, (202) 622–3945, Internal Revenue Service, room 5569, 1111 Constitution Avenue NW., Washington, DC 20224.

SUPPLEMENTARY INFORMATION:

Title: Tax-Exempt Entity Leasing.

OMB Number: 1545–0923.

Regulation Project Number: REG–209274–85.

Abstract: These regulations provide guidance to persons executing lease agreements involving tax-exempt entities under 168(h) of the Internal Revenue Code. The regulations are necessary to implement Congressionally enacted legislation and elections for certain previously tax-exempt organizations and certain tax-exempt controlled entities.

Current Actions: There is no change to these existing regulations.

Type of Review: Extension of a currently approved collection.

Affected Public: Not-for-profit institutions, and state, local or tribal governments.

Estimated Number of Respondents: 4,000.

Estimated Time Per Respondent: 30 minutes.

Estimated Total Annual Burden Hours: 2,000.

The following paragraph applies to all of the collections of information covered by this notice:

An agency may not conduct or sponsor, and a person is not required to respond to, a collection of information unless the collection of information displays a valid OMB control number. Books or records relating to a collection of information must be retained as long as their contents may become material in the administration of any internal revenue law. Generally, tax returns and tax return information are confidential, as required by 26 U.S.C. 6103.

Request for Comments

Comments submitted in response to this notice will be summarized and/or included in the request for OMB approval. All comments will become a matter of public record. Comments are invited on: (a) Whether the collection of information is necessary for the proper performance of the functions of the agency, including whether the information shall have practical utility; (b) the accuracy of the agency's estimate of the burden of the collection of information; (c) ways to enhance the quality, utility, and clarity of the information to be collected; (d) ways to minimize the burden of the collection of information on respondents, including through the use of automated collection techniques or other forms of information technology; and (e) estimates of capital or start-up costs and costs of operation, maintenance, and purchase of services to provide information.

Approved: May 5, 1998.

Garrick R. Shear,

IRS Reports Clearance Officer.

[FR Doc. 98–12725 Filed 5–12–98; 8:45 am]

BILLING CODE 4830–01–U

DEPARTMENT OF THE TREASURY

Internal Revenue Service

[PS–127–86; PS–128–86; PS–73–88]

Proposed Collection; Comment Request for Regulation Project

AGENCY: Internal Revenue Service (IRS), Treasury.

ACTION: Notice and request for comments.

SUMMARY: The Department of the Treasury, as part of its continuing effort to reduce paperwork and respondent burden, invites the general public and other Federal agencies to take this opportunity to comment on proposed and/or continuing information collections, as required by the Paperwork Reduction Act of 1995, Public Law 104–13 (44 U.S.C. 3506(c)(2)(A)). Currently, the IRS is soliciting comments concerning an existing final regulation, PS–127–86, PS–128–86, and PS–73–88 (TD 8644), Generation-Skipping Transfer Tax (§§ 26.2601–1, 26.2632–1, 26.2642–1, 26.2642–2, 26.2642–3, 26.2642–4, 26.2652–2, and 26.2662–1).

DATES: Written comments should be received on or before July 13, 1998 to be assured of consideration.

ADDRESSES: Direct all written comments to Garrick R. Shear, Internal Revenue Service, room 5571, 1111 Constitution Avenue NW., Washington, DC 20224.

FOR FURTHER INFORMATION CONTACT: Requests for additional information or copies of the regulation should be directed to Carol Savage, (202) 622–3945, Internal Revenue Service, room 5569, 1111 Constitution Avenue NW., Washington, DC 20224.

SUPPLEMENTARY INFORMATION:

Title: Generation-Skipping Transfer Tax.

OMB Number: 1545–0985.

Regulation Project Number: PS–127–86; PS–128–86; PS–73–88.

Abstract: This regulation provides rules relating to the effective date, return requirements, definitions, and certain rules covering the generation-skipping transfer tax. The information required by the regulation will require individuals and/or fiduciaries to report information on Forms 706, 706NA, 706GS(D), 706GS(D–1), 706GS(T), 709, and 843 in connection with the generation skipping transfer tax. The information will facilitate the assessment of the tax and taxpayer examinations.

Current Actions: There is no change to this existing regulation.

Type of Review: Extension of OMB approval.

Affected Public: Individuals or households, and business or other for-profit organizations.

Estimated Number of Respondents: 7,500.

Estimated Time Per Respondent: 30 minutes.

Estimated Total Annual Burden Hours: 3,750.

The following paragraph applies to all of the collections of information covered by this notice:

An agency may not conduct or sponsor, and a person is not required to respond to, a collection of information unless the collection of information displays a valid OMB control number. Books or records relating to a collection of information must be retained as long as their contents may become material in the administration of any internal revenue law. Generally, tax returns and tax return information are confidential, as required by 26 U.S.C. 6103.

Request for Comments

Comments submitted in response to this notice will be summarized and/or included in the request for OMB approval. All comments will become a matter of public record. Comments are invited on: (a) Whether the collection of information is necessary for the proper performance of the functions of the agency, including whether the

information shall have practical utility; (b) the accuracy of the agency's estimate of the burden of the collection of information; (c) ways to enhance the quality, utility, and clarity of the information to be collected; (d) ways to minimize the burden of the collection of information on respondents, including through the use of automated collection techniques or other forms of information technology; and (e) estimates of capital or start-up costs and costs of operation, maintenance, and purchase of services to provide information.

Approved: May 5, 1998.

Garrick R. Shear,

IRS Reports Clearance Officer.

[FR Doc. 98–12726 Filed 5–12–98; 8:45 am]

BILLING CODE 4830–01–U

DEPARTMENT OF THE TREASURY

Internal Revenue Service

[INTL–29–91]

Proposed Collection; Comment Request For Regulation Project

AGENCY: Internal Revenue Service (IRS), Treasury.

ACTION: Notice and request for comments.

SUMMARY: The Department of the Treasury, as part of its continuing effort to reduce paperwork and respondent burden, invites the general public and other Federal agencies to take this opportunity to comment on proposed and/or continuing information collections, as required by the Paperwork Reduction Act of 1995, Public Law 104–13 (44 U.S.C. 3506(c)(2)(A)). Currently, the IRS is soliciting comments concerning an existing final regulation, INTL–29–91 (TD 8556), Computation and Characterization of Income and Earnings and Profits Under the Dollar Approximate Separate Transactions Method of Accounting (DASTM) (§ 1.985–3).

DATES: Written comments should be received on or before July 13, 1998 to be assured of consideration.

ADDRESSES: Direct all written comments to Garrick R. Shear, Internal Revenue Service, room 5571, 1111 Constitution Avenue NW., Washington, DC 20224.

FOR FURTHER INFORMATION CONTACT: Requests for additional information or copies of the regulation should be directed to Carol Savage, (202) 622–3945, Internal Revenue Service, room 5569, 1111 Constitution Avenue NW., Washington, DC 20224.

SUPPLEMENTARY INFORMATION:

Title: Computation and Characterization of Income and Earnings and Profits Under the Dollar Approximate Separate Transactions Method of Accounting (DASTM).

OMB Number: 1545–1051.

Regulation Project Number: INTL–29–91.

Abstract: This regulation provides that taxpayers operating in hyperinflationary currencies must use the United States dollar as their functional currency and compute income using the dollar approximate separate transactions method (DASTM). Small taxpayers may elect an alternate method by which to compute income or loss. For prior taxable years in which income was computed using the profit and loss method, taxpayers may elect to recompute their income using DASTM.

Current Actions: There is no change to this existing regulation.

Type of Review: Extension of a currently approved collection.

Affected Public: Business or other for-profit organizations.

Estimated Number of Respondents: 700.

Estimated Time Per Respondent: 1 hour, 26 minutes.

Estimated Total Annual Burden Hours: 1,000.

The following paragraph applies to all of the collections of information covered by this notice:

An agency may not conduct or sponsor, and a person is not required to respond to, a collection of information unless the collection of information displays a valid OMB control number.

Books or records relating to a collection of information must be retained as long as their contents may become material in the administration of any internal revenue law. Generally, tax returns and tax return information are confidential, as required by 26 U.S.C. 6103.

Request for Comments: Comments submitted in response to this notice will be summarized and/or included in the request for OMB approval. All comments will become a matter of public record. Comments are invited on: (a) whether the collection of information is necessary for the proper performance of the functions of the agency, including whether the information shall have practical utility; (b) the accuracy of the agency's estimate of the burden of the collection of information; (c) ways to enhance the quality, utility, and clarity of the information to be collected; (d) ways to minimize the burden of the collection of information on respondents, including through the use of automated collection techniques or other forms of information technology; and (e) estimates of capital or start-up costs and costs of operation, maintenance, and purchase of services to provide information.

Approved: May 5, 1998.

Garrick R. Shear,

IRS Reports Clearance Officer.

[FR Doc. 98–12727 Filed 5–12–98; 8:45 am]

BILLING CODE 4830–01–U

DEPARTMENT OF TREASURY

Internal Revenue Service

Notice of Meeting With Current and Prospective Tax Software Developers for Electronic Filing of Form 1065, U.S. Partnership Return of Income

AGENCY: Internal Revenue Service (IRS), Treasury.

SUMMARY: This announcement serves as notice that the Internal Revenue Service will hold a meeting of current and prospective tax software developers to share the thinking about the strategic direction for mandating electronic filing for partnerships with more than 100 partners and to get initial reactions from the software developers to these strategies. In addition to discussing partnership returns, information will be provided on other electronic business returns and a session will be held to address questions from the March 3 and 4, 1998 software developers meeting.

DATES: The tentative agenda is as follows: June 16 from 12:30 pm to 4:30 pm will be for the issues from the March 3–4, 1998 software developers meeting; June 17 from 9:30 am to 4 pm, discussion on the Form 1065 electronic filing strategy; and on June 18 from 9 am to 11:30 am, information on electronically filed business returns will be discussed.

ADDRESSES: The meeting will be held at the New Carrollton Federal Building, 5000 Ellin Road, B1–303, Lanham, MD 20706 Room.

FOR FURTHER INFORMATION CONTACT: Questions or concerns should be directed to Lee Lawrence at IRS, Electronic Tax Administration, T:ETA:O, 5000 Ellin Road C4–237, Lanham, MD 20706 or by telephone at (202) 283–0445 (not a toll-free number). To register for this meeting, please call Carol Jakes at (202) 283–0559. A registration form will be mailed or faxed which must be completed and returned to the IRS by June 8, 1998. If you have any questions or issues which you would like to have addressed during the meeting, you may submit them

beforehand by faxing them to: Lee Lawrence ETA (202) 283–4786.

Terry Lutes,

National Director, Electronic Program Operations Office, Electronic Tax Administration.

[FR Doc. 98–12728 Filed 5–12–98; 8:45 am]

BILLING CODE 4830–01–U

federal register

Wednesday
May 13, 1998

Part II

Department of Transportation

Federal Aviation Administration

14 CFR Part 91

Prohibition Against Certain Flights Within the Territory and Airspace of Afghanistan; Final Rule

DEPARTMENT OF TRANSPORTATION

Federal Aviation Administration

14 CFR Part 91

[Docket No. 27744; SFAR 67]

RIN 2120–AG56

Prohibition Against Certain Flights Within the Territory and Airspace of Afghanistan

AGENCY: Federal Aviation Administration (FAA), DOT.

ACTION: Final rule.

SUMMARY: This action amends Special Federal Aviation Regulation (SFAR) 67 by extending until May 10, 2000, the prohibition on flight operations within portions of the territory and airspace of Afghanistan by any United States air carrier and commercial operator, by any person exercising the privileges of an airman certificate issued by the FAA, or by an operator using an aircraft registered in the United States unless the operator of such aircraft is a foreign air carrier; the amendment also permits flight operations by the aforementioned persons through Afghan airspace east of 070°35′ east longitude, or south of 33° north latitude. This action is necessary to continue the prevention of an undue hazard to persons and aircraft engaged in such flight operations as a result of the ongoing civil war in Afghanistan.

DATES: This action is effective May 7, 1998.

FOR FURTHER INFORMATION CONTACT: David Catey, Air Transportation Division, Flight Standards Service, Federal Aviation Administration, 800 Independence Avenue, SW., Washington, D.C. 20591. Telephone: (202) 267–8166.

SUPPLEMENTARY INFORMATION:

Availability of This Action

An electronic copy of this document may be downloaded, using a modem and suitable communications software, from the FAA regulations section of the Fedworld electronic bulletin board service ((703) 321–3339), the **Federal Register**'s electronic bulletin board service ((202) 512–1661), or the FAA's Aviation Rulemaking Advisory Committee Bulletin Board service ((800) 322–2722 or (202) 267–5948). Internet users may reach the FAA's web page at http://www.faa.gov or the **Federal Register**'s web page at http://www.access.gpo.gov/su__docs for access to recently published rulemaking documents.

Any person may obtain a copy of this document by submitting a request to the Federal Aviation Administration, Office of Rulemaking, ARM–1, 800 Independence Ave, SW., Washington, DC 20591, or by calling (202) 267–9677. Communications must identify the docket number of this action.

Persons interested in being placed on the mailing list for future rules should request from the above office a copy of Advisory Circular No. 11–2A, Notice of Proposed Rulemaking Distribution System, which describes the application procedure.

Small Entity Inquiries

The Small Business Regulatory Enforcement Fairness Act of 1996 (SBREFA) requires the FAA to report inquiries from small entities concerning information on, and advice about, compliance with statutes and regulations within the FAA's jurisdiction, including interpretation and application of the law to specific sets of facts supplied by a small entity.

If you are a small entity and have a question, contact your local FAA official. If you do not know how to contact your local FAA official, you may contact Charlene Brown, Program Analyst Staff, Office of Rulemaking, ARM–27, Federal Aviation Administration, 800 Independence Avenue, SW, Washington, DC 20591, 1–888–551–1594. Internet users can find additional information on SBREFA in the ''Quick Jump'' section of the FAA's web page at http://www.faa.gov and may send electronic inquiries to the following Internet address: 9–AWA–SBREFA@faa.dot.gov.

Background

On May 10, 1994, the FAA issued SFAR 67 in response to the threat to civil aviation due to the civil war in Afghanistan (59 FR 25282; May 14, 1994). SFAR 67 was originally scheduled to expire after one year. Notices of the extension of SFAR 67 were published on May 15, 1995 (60 FR 25980) and May 14, 1996 (61 FR 24430). On May 9, 1997, the FAA again extended the expiration date to May 10, 1998, and permitted flight operations by affected persons through Afghan airspace over the Wakhan Corridor (62 FR 26890; May 15, 1997).

Fighting between government and opposition forces, and the resulting threat to civil aviation, continues in portions of Afghanistan, although at a lower level and intensity in the areas to be opened to U.S. civil aviation than when SFAR 67 was originally issued and later amended. The Taliban have controlled all of southern Afghanistan for a considerable time; currently the fighting is primarily confined to the central Kabul area and northern and northwestern Afghanistan. While other areas of the country continue to be the scene of sporadic fighting, the factions involved have little or no capability to target aircraft operating at normal cruising altitudes in the areas being opened to U.S. operators. The area where civil aviation is most threatened in Afghanistan lies in an area north of 33° north latitude and west of 070°35′ east longitude.

The primary factions, the Taliban and a loose coalition of opposition forces, still possess a wide range of sophisticated surface- and air-based weapons that potentially could be used to attack civil aircraft overflying central, northern, and northwestern Afghanistan at cruising altitudes. These weapons include fighter and attack aircraft armed with cannons and air-to-air missiles, and surface-to-air missiles (SAM) systems. Although aircraft have been used primarily for ground attacks against airfields and other key facilities, air-to-air encounters also have been observed. Press reports also suggest that a number of Afghan military and civil aircraft have been shot down using SAMs. The fluctuations in the level and intensity of combat create an unsafe environment for transiting civilian aircraft in the vicinity of Kabul and northern and northwestern Afghanistan.

Advisories issued by the International Civil Aviation Organization (ICAO) urging civil aircraft to avoid Afghan airspace remain valid for at least a portion of Afghan airspace. In a letter dated April 8, 1994, Assad Kotaite, President of the ICAO Council, issued a notice urging air carriers to discontinue flights over Afghanistan. In a subsequent letter dated November 14, 1994, Dr. Kotaite warned of the continuing risks associated with flights over Afghanistan, including operations using certain routes developed by the Afghan government or neighboring countries. On September 18, 1995, in yet another letter addressing flight safety over Afghanistan, Dr. Kotaite advised that ''the safety of international civil flight operations through the Kabul [Flight Information Region] can not be assured.'' Dr. Kotaite did indicate in this letter that if operators were using Afghan airspace, flying time over Afghanistan should be minimized and that route V500, promulgated by a Pakistani notice to airmen (NOTAM), involves only a two minute flying time over Afghanistan. A letter of May 10, 1996, advised of a report by the crew of a Boeing 747 cargo aircraft of anti-aircraft fire in the vicinity of Kabul; however, at 37,000 feet altitude, the aircraft was never in any danger. These

advisories, which are still germane, reflect the uncertain nature of the situation and underscore the dangers to flights in portions of Afghan airspace. On April 29, 1998, Dr. Kotaite sent a letter to the United States supporting the approach taken in the proposal. Further, Dr. Kotaite stated that ICAO is considering issuing another letter to all ICAO member states indicating that flights could be permitted in the eastern and southern areas of Afghanistan.

In the past, at least two major factions in Afghanistan have deliberately targeted civil aircraft. Such policies occasionally have been publicly announced. In a statement released in September 1995, General Dostam, who at the time opposed the nominal Rabbani Government, warned all international air carriers that his forces would force or shoot down any airplane venturing into airspace controlled by his faction without first obtaining proper clearance from them. This statement followed a similar warning issued in 1994 by an opposition council. Air corridors over central Afghanistan have been closed frequently as a result of these threats and active factional fighting.

Currently, none of the factions in the civil war has a clear intent to deliberately target a foreign-flagged commercial air carrier. However, the Taliban's continued frustration with the airlift of arms, ammunition, and supplies to other factions, combined with the other factions' interest in bringing down Taliban flights, creates a potentially hazardous environment whereby an airliner might be misidentified and inadvertently targeted in the central, northern, and northwestern portions of Afghanistan. The FAA has received reports that scheduled passenger flights have been intercepted by opposition fighter aircraft. In July 1996, a fighter intercepted a Pakistan International Airlines flight enroute from London to Lahore. Some reporting indicates that the aircraft may have been 40–50 NM off its assigned international air route. Charter flights appear to be equally or more vulnerable. A Russian-operated charter flight from the UAE carrying unmanifested ammunition to Kabul was forced to land in Kandahar; the aircraft and its crew were held there for almost one year before escaping in August 1996.

The control and operation of Afghanistan's limited air traffic control facilities remains relatively stable. Although central Afghan government control over installations critical to air traffic navigation and communication changed hands when the Taliban took control of Kabul, the transfer of authority went smoothly. Indeed, most air traffic control employees remained on the job and only the senior leadership was replaced. If opposition forces retake Kabul, the realignment of control to the previous occupants should be smooth as well.

The greatest threat to civil aviation is within the area over Afghanistan north of 33° north latitude and west of 070°35′ east longitude. The fighting described above, and the resulting threat to civil aviation, has occurred well away from the Wakhan Corridor, which the FAA opened to U.S. operators in May 1997 by allowing operations east of 071°35′ east longitude. Several non-U.S. carriers also utilize international air corridor V876, just west of the Wakhan Corridor, as an alternate to the Wakhan Corridor. The area surrounding V876 (east of 070°35′ east longitude) is remote and sparsely populated. There is no evidence that Afghan factions or terrorist elements would target or make preparations for specific operations against U.S. or other international air carriers overflying Afghanistan east of 070°35′ east longitude, which includes V876. While an action aimed at shooting down or intercepting an aircraft on V876 cannot be absolutely ruled out, it is considered unlikely. The U.S. Government assesses the overall risk for flights using V876 as low; the risk for the Wakhan Corridor continues to be assessed as minimal. The slightly higher threat along V876 comes mainly from the fact that flights could cross factional boundaries and areas of expected fighting. This threat is mitigated by the lack of surface-to-air missiles and fighter aircraft in this area and the lack of intent to target aircraft by the armed factions in the area. Several non-U.S. air carriers currently operate safely along the V876 airway, and the International Air Transport Association endorses its use. Therefore, the FAA is removing the flight prohibition for that portion of Afghan airspace east of 070°35′ east longitude.

Similarly, civil aviation operations along several routes south of 33° north latitude-particularly G202 and V922—would encounter minimal to low risk. The Taliban has controlled all of southern Afghanistan, including the areas encompassing the routes south of the 33° north latitude. That area has remained relatively stable, with no fighting observed for at least 2 years. Therefore, the FAA is removing the flight prohibition for that portion of Afghan airspace south of the 33° north latitude.

Consideration of Comments

On April 1, 1998, the FAA proposed to revise SFAR 67 (62 FR 16078). Three comments were received in the docket. The Air Transport Association supported the amendment as proposed citing the economic benefits of reducing the circumnavigation of Afghan airspace. The Air Line Pilots' Association concurred with continuing flight prohibitions in certain areas of Afghanistan as proposed. The International Civil Aviation Organization supported the approach taken by the United States as proposed. Therefore, the FAA will adopt the amendment as proposed.

Amendment of Prohibition Against Certain Flights Within the Territory and Airspace of Afghanistan

On the basis of the above information, and in furtherance of my responsibilities to promote the safety of flight of civil aircraft in air commerce, I have determined that continued action by the FAA is necessary to prevent the injury to U.S. operators or loss of certain U.S.-registered aircraft conducting flights in the vicinity of Afghanistan. I find that the current civil war in Afghanistan continues to present an immediate hazard to the operation of civil aircraft within portions of Afghan airspace. Accordingly, I am extending for 2 years the prohibition under SFAR 67 on flight operations within the territory and airspace of Afghanistan. This action is necessary to prevent an undue hazard to aircraft and to protect persons and property on board those aircraft. SFAR 67 expires on May 10, 2000. Because the circumstances described herein warrant continued action by the FAA to maintain the safety of flight within certain portions of Afghan airspace, I find good cause exists for making this rule effective immediately upon issuance. I also find that this action is fully consistent with the obligations under section 40105 of Title 49, United States Code to ensure that I exercise my duties consistently with the obligations of the United States under international agreements.

I also am ordering the amendment of SFAR 67 to allow flights by United States air carriers and commercial operators, by any person exercising the privileges of a certificate issued by the FAA, or by an operator using aircraft registered in the United States through Afghan airspace east of 070°35′ east longitude or south of 33° north latitude.

The Department of State has been advised of and has no objections to the actions taken herein.

Regulatory Evaluation Summary

In accordance with SFAR 67, United States air carriers and commercial operators currently use alternate routes to avoid Afghan territory and airspace. Navigating around Afghanistan results in increased variable operating costs, primarily for United States air carriers operating between Europe and India. Based on data identified during the promulgation of SFAR 67, the FAA estimates that the weighted-average variable cost for a wide-body aircraft is approximately $3,200 per hour. Based on data received from two United States air carriers, the additional time it takes to navigate around Afghanistan ranges from 10 minutes by flying over Iran to between one and four hours by flying over Saudi Arabia (depending on the flight's origin and destination). Additional costs associated with these alternate routes range from little, if any, by flying over Iran to between $3,200 to $12,700 per flight over Saudi Arabia.

Last year the FAA amended SFAR 67 to allow for flights along the route V500 airway that passes through the Wakhan Corridor. This amendment to the extension to SFAR 67, further allows United States air carriers access to Afghan airspace east of 070°35′ east longitude and south of 33° north latitude. There is no inordinate hazard to persons and aircraft, due to the remote, sparsely populated nature of the area surrounding the Wakhan Corridor and V876, and because no significant combat action is known to have occurred in the area east of 070°35′ east longitude and south of 33° north latitude for at least 2 years. This amendment provides U.S. air carriers with an option to operate along route V876 rather than route V500 or route G8 which goes over Iran and Pakistan. If U.S. air carriers choose to fly route V876 over the Wakhan region, they could experience the same cost savings that route V500 offered, which ranged from approximately $530 by flying over Iran, and between $3,200 to $12,700 per flight over Saudi Arabia.

This action imposes no additional cost burden on U. S. air carriers, only cost savings. In view of the foregoing, the FAA has determined that the extension to SFAR 67 is cost beneficial.

Regulatory Flexibility Determination

The Regulatory Flexibility Act of 1980 (RFA), as amended, was enacted by Congress to ensure that small entities are not unnecessarily and disproportionately burdened by Government regulations. The Act requires that whenever an agency publishes a general notice of proposed rulemaking, an initial regulatory flexibility analysis identifying the economic impact on small entities, and considering alternatives that may lessen those impacts must be conducted if the rule would have a significant economic impact on a substantial number of small entities.

The FAA has determined that none of the United States air carriers or commercial operators are small entities. Therefore, the SFAR will not impose a significant economic impact on a substantial number of small entities.

International Trade Impact Assessment

When the FAA promulgated SFAR 67, it found that the SFAR could have an adverse impact on the international flights of United States air carriers and commercial operators because it could marginally increase their operating costs and flight times relative to foreign carriers who continue to overfly Afghanistan. This action does not impose any restrictions on United States air carriers or commercial operators beyond those originally imposed by SFAR 67. Therefore, the FAA believes that the SFAR will have little, if any, effect on the sale of United States aviation products and services in foreign countries.

Unfunded Mandates Reform Act

Title II of the Unfunded Mandates Reform Act of 1995 (the Act), enacted as Pub. L. 104–4 on March 22, 1995, requires each Federal agency, to the extent permitted by law, to prepare a written assessment of the effects of any Federal mandate in a proposed or final agency rule that may result in the expenditure by State, local, and tribal governments, in the aggregate, or by the private sector, of $100 million or more (adjusted annually for inflation) in any one year. Section 204(a) of the Act, 2 U.S.C. 1534(a), requires the Federal agency to develop an effective process to permit timely input by elected officers (or their designees) of State, local, and tribal governments on a ''significant intergovernmental mandate.'' A ''significant intergovernmental mandate'' under the Act is any provision in a Federal agency regulation that would impose an enforceable duty upon State, local, and tribal governments, in the aggregate, of $100 million (adjusted annually for inflation) in any one year. Section 203 of the Act, 2 U.S.C. 1533, which supplements section 204(a), provides that before establishing any regulatory requirements that might significantly or uniquely affect small governments, the agency shall have developed a plan that, among other things, provides for notice to potentially affected small governments, if any, and for a meaningful and timely opportunity to provide input in the development of regulatory actions.

This rule does not contain any Federal intergovernmental mandates, but does contain a private sector mandate. However, because expenditures by the private sector will not exceed $100 million annually, the requirements of Title II of the Unfunded Mandates Reform Act of 1995 do not apply.

Paperwork Reduction Act

This amendment contains no information collection requests requiring approval of the Office of Management and Budget pursuant to the Paperwork Reduction Act (44 U.S.C. 3507 *et seq.*).

Federalism Determination

This amendment will not have substantial direct effects on the states, on the relationship between the national government and the states, or on the distribution of power and responsibilities among the various levels of government. Therefore, in accordance with Executive Order 12612 (52 FR 4168; October 30, 1987), it is determined that this regulation does not have federalism implications warranting the preparation of a Federalism Assessment.

Significance

The FAA has determined that this action is not a ''significant regulatory action'' under Executive Order 12866. This action is considered a ''significant rule'' under DOT Regulatory Policies and Procedures (44 FR 11034; February 26, 1979). Because revenue flights to Afghanistan are not currently being conducted by United States air carriers or commercial operators, the FAA certifies that this rule will not have a significant economic impact, positive or negative, on a substantial number of small entities under the criteria of the Regulatory Flexibility Act.

The Amendment

For the reasons set forth above, the Federal Aviation Administration is amending 14 CFR Part 91 as follows:

PART 91—GENERAL OPERATING AND FLIGHT RULES

1. The authority citation for Part 91 continues to read as follows:

Authority: 49 U.S.C. 106(g), 40103, 40113, 40120, 44101, 44701, 44709, 44711, 44712, 44715, 44716, 44717, 44722, 46306, 46315, 46316, 46502, 46504, 46506, 47122, 47508, 47528–47531.

2. Paragraphs 3 and 5 of SFAR 67 are revised to read as follows:

SPECIAL FEDERAL AVIATION REGULATIONS NO. 67—PROHIBITION AGAINST CERTAIN FLIGHTS WITHIN THE TERRITORY AND AIRSPACE OF AFGHANISTAN

* * * * *

3. *Permitted Operations.* This SFAR does not prohibit persons described in paragraph 1 from conducting flight operations within the territory and airspace of Afghanistan:

a. Where such operations are authorized either by exemption issued by the Administrator or by another agency of the United States Government with the approval of the FAA; or

b. East of 070°35′ east longitude, or south of 33° north latitude.

* * * * *

5. *Expiration.* This Special Federal Aviation Regulation remains in effect until May 10, 2000.

Issued in Washington, DC on May 7, 1998.

Jane F. Garvey,

Administrator.

[FR Doc. 98–12631 Filed 5–8–98; 10:11 am]

BILLING CODE 4910–13–P

federal register

Wednesday
May 13, 1998

Part III

Department of Health and Human Services

Food and Drug Administration

21 CFR Parts 3, et al.

Removal of Regulations Regarding Certification of Drugs Composed Wholly or Partly of Insulin; Proposed Rule and Rule

DEPARTMENT OF HEALTH AND HUMAN SERVICES

Food and Drug Administration

21 CFR Parts 3, 5, 10, 16, 25, 50, 56, 58, 71, 200, 201, 207, 210, 211, 310, 312, 314, 369, 429, 800, and 812

[Docket No. 98N–0210]

Removal of Regulations Regarding Certification of Drugs Composed Wholly or Partly of Insulin; Companion Document to Direct Final Rule

AGENCY: Food and Drug Administration, HHS.

ACTION: Proposed rule.

SUMMARY: The Food and Drug Administration (FDA) is publishing this companion proposed rule to the direct final rule, published elsewhere in this issue of the **Federal Register**, which is intended to repeal FDA's regulations governing certification of drugs containing insulin and make conforming amendments to other sections of the agency's regulations. The agency is taking this action in accordance with provisions of the Food and Drug Administration Modernization Act of 1997 (FDAMA). FDAMA repealed the statutory provision in the Federal Food, Drug, and Cosmetic Act (the act) under which the agency certified drugs containing insulin. FDAMA also made conforming amendments to the act.

DATES: Comments must be received on or before July 27, 1998.

ADDRESSES: Submit written comments to the Dockets Management Branch (HFA–305), Food and Drug Administration, 12420 Parklawn Dr., rm. 1–23, Rockville, MD 20857.

FOR FURTHER INFORMATION CONTACT: Wayne H. Mitchell, Center for Drug Evaluation and Research (HFD–7), Food and Drug Administration, 5600 Fishers Lane, Rockville, MD 20857, 301–594–2041.

SUPPLEMENTARY INFORMATION:

I. Background

Section 125(a) of FDAMA (Pub. L. 105–115) repealed section 506 of the act (21 U.S.C. 356) and made other conforming amendments to the act and another provision of Federal law. Section 506 was the statutory provision in the act under which the agency certified drugs containing insulin. FDA is proposing to remove all regulations relating to the certification of insulin products, remove citations to section 506 of the act in various authority sections in title 21 of the Code of Federal Regulations (CFR), and eliminate citations to section 506 in regulations that do not deal primarily with the certification of insulin. FDA is also proposing to eliminate out-of-date provisions dealing with labeling and testing of insulin and to update the definition of insulin found in 21 CFR 200.15.

II. Additional Information

This proposed rule is a companion to the direct final rule published elsewhere in this issue of the **Federal Register**. The companion proposed rule and the direct final rule are identical. This companion proposed rule will provide the procedural framework to finalize the rule in the event the direct final rule receives significant adverse comment and is withdrawn. The comment period for the companion proposed rule runs concurrently with the comment period of the direct final rule. Any comments received under the companion proposed rule will be treated as comments regarding the direct final rule.

Most of the amendments in this rule are a direct result of the repeal of the statutory certification provision. The remainder of the amendments repeal or update out-of-date, noncontroversial regulations dealing with insulin. If no significant adverse comment is received in response to the direct final rule, no further action will be taken related to the companion proposed rule. Instead, FDA will publish a confirmation document within 30 days after the comment period ends confirming that the direct final rule will go into effect on September 25, 1998. If FDA receives significant adverse comments, the agency will withdraw the direct final rule. FDA will proceed to respond to all of the comments received regarding the rule and, if appropriate, the rule will be finalized under this companion proposed rule using usual notice-and-comment procedures.

For additional information, see the corresponding direct final rule published elsewhere in this issue of the **Federal Register**. All persons who wish to comment should review the detailed rationale for these amendments set out in the preamble discussion of the direct final rule. A significant adverse comment is one that explains why the rule would be inappropriate, including challenges to the rule's underlying premise or approach, or would be ineffective or unacceptable without a change. A comment recommending a rule change in addition to this rule will not be considered a significant adverse comment, unless the comment states why this rule would be ineffective without the additional change.

III. Environmental Impact

The agency has determined under 21 CFR 25.30(h) that this action is of a type that does not individually or cumulatively have a significant effect on the human environment. Therefore, neither an environmental assessment nor an environmental impact statement is required.

IV. Analysis of Impacts

FDA has examined the impacts of this companion proposed rule under Executive Order 12866, the Regulatory Flexibility Act (5 U.S.C. 601–612), and the Unfunded Mandates Reform Act of 1995 (Pub. L. 104–4). Executive Order 12866 directs agencies to assess all costs and benefits of available regulatory alternatives and, when regulation is necessary, to select regulatory approaches that maximize net benefits (including potential economic, environmental, public health and safety, and other advantages; distributive impacts; and equity). Executive Order 12866 classifies a rule as significant if it meets any one of a number of specified conditions, including having an annual effect on the economy of $100 million or adversely affecting in a material way a sector of the economy, competition, or jobs, or if it raises novel legal or policy issues. The agency believes that this proposed rule is consistent with the regulatory philosophy and principles identified in the Executive Order. In addition, the proposed rule is not a significant regulatory action as defined by the Executive Order and so is not subject to review under the Executive Order.

The Regulatory Flexibility Act requires agencies to analyze regulatory options to minimize any significant impact on small entities. The only two current manufacturers marketing insulin drug products in the United States are not small entities. Furthermore, by eliminating the certification process, this direct final rule would lower market entry barriers for small entities. The agency certifies that the proposed rule will not have a significant impact on a substantial number of small entities. Therefore, under the Regulatory Flexibility Act, no further analysis is required.

The Unfunded Mandates Act requires an agency to prepare a budgetary impact statement before issuing any rule likely to result in a Federal mandate that may result in expenditures by State, local, and tribal governments or the private sector of $100 million (adjusted annually for inflation) in any 1 year. The elimination of the insulin certification program will lower the

costs of marketing insulin drug products by eliminating both the direct cost of applying for certification and the cost of holding batches of insulin while awaiting certification. Because this rule will not result in an expenditure of $100 million or more on any governmental entity or the private sector, no budgetary impact statement is required.

V. Paperwork Reduction Act of 1995

FDA tentatively concludes that this proposed rule contains no collections of information. Therefore, clearance by the Office of Management and Budget under the Paperwork Reduction Act of 1995 (Pub. L. 104–13) is not required.

VI. Request for Comments

Interested persons may, on or before September 27, 1998, submit to the Dockets Management Branch (address above) written comments regarding this proposal. This comment period runs concurrently with the comment period for the direct final rule; any comments received will be considered as comments regarding the direct final rule. Two copies of any comments are to be submitted, except that individuals may submit one copy. Comments are to be identified with the docket number found in brackets in the heading of this document. Received comments may be seen in the office above between 9 a.m. and 4 p.m., Monday through Friday.

List of Subjects

21 CFR Part 3

Administrative practice and procedure, Biologics, Drugs, Medical devices.

21 CFR Part 5

Authority delegations (Government agencies), Imports, Organization and functions (Government agencies).

21 CFR Part 10

Administrative practice and procedure, News media.

21 CFR Part 16

Administrative practice and procedure.

21 CFR Part 25

Environmental impact statements, Foreign relations, Reporting and recordkeeping requirements.

21 CFR Part 50

Human research subjects, Prisoners, Reporting and recordkeeping requirements, Safety.

21 CFR Part 56

Human research subjects, Reporting and recordkeeping requirements, Safety.

21 CFR Part 58

Laboratories, Reporting and recordkeeping requirements.

21 CFR Part 71

Administrative practice and procedure, Color additives, Confidential business information, Cosmetics, Drugs, Reporting and recordkeeping requirements.

21 CFR Part 200

Drugs, Prescription drugs.

21 CFR Part 201

Drugs, Labeling, Reporting and recordkeeping requirements.

21 CFR 207

Drugs, Reporting and recordkeeping requirements.

21 CFR 210

Drugs, Packaging and containers.

21 CFR Part 211

Drugs, Labeling, Laboratories, Packaging and containers, Prescription drugs, Reporting and recordkeeping requirements, Warehouses.

21 CFR Part 310

Administrative practice and procedure, Drugs, Labeling, Medical devices, Reporting and recordkeeping requirements.

21 CFR Part 312

Drugs, Exports, Imports, Investigations, Labeling, Medical research, Reporting and recordkeeping requirements, Safety.

21 CFR Part 314

Administrative practice and procedure, Confidential business information, Drugs, Reporting and recordkeeping requirements.

21 CFR Part 369

Labeling, Medical devices, Over-the-counter drugs.

21 CFR Part 429

Administrative practice and procedure, Drugs, Labeling, Packaging and containers, Reporting and recordkeeping requirements.

21 CFR Part 800

Administrative practice and procedure, Medical devices, Ophthalmic goods and services, Packaging and containers, Reporting and recordkeeping requirements.

21 CFR Part 812

Health records, Medical devices, Medical research, Reporting and recordkeeping requirements.

Therefore, under the Federal Food, Drug, and Cosmetic Act and under authority delegated to the Commissioner of Food and Drugs, it is proposed that 21 CFR parts 3, 5, 10, 16, 25, 50, 56, 58, 71, 200, 201, 207, 210, 211, 310, 312, 314, 369, 429, 800, and 812 be amended as follows:

PART 3—PRODUCT JURISDICTION

1. The authority citation for 21 CFR part 3 is revised to read as follows:

Authority: 21 U.S.C. 321, 351, 352, 353, 355, 357, 360, 360c–360f, 360h–360j, 360gg–360ss, 371(a), 379e, 381, 394; 42 U.S.C. 216, 262.

PART 5—DELEGATIONS OF AUTHORITY AND ORGANIZATION

2. The authority citation for 21 CFR part 5 continues to read as follows:

Authority: 5 U.S.C. 504, 552, App. 2; 7 U.S.C. 138a, 2271; 15 U.S.C. 638, 1261–1282, 3701–3711a; 15 U.S.C. 1451–1461; 21 U.S.C. 41–50, 61–63, 141–149, 321–394, 467f, 679(b), 801–886, 1031–1309; 35 U.S.C. 156; 42 U.S.C. 241, 242, 242a, 242l, 242n, 243, 262, 263, 264, 265, 300u–300u–5, 300aa–1; 1395y, 3246b, 4332, 4831(a), 10007–10008; E.O. 11921, 41 FR 24294, 3 CFR, 1977 Comp., p. 124–131; E.O. 12591, 52 FR 13414, 3 CFR, 1988 Comp., p. 220–223.

§ 5.31 [Amended]

3. Section 5.31 *Petitions under part 10* is amended by removing and reserving paragraphs (f)(2)(iii) and (f)(2)(iv).

§ 5.73 [Removed]

4. Section 5.73 *Certification of insulin* is removed.

§ 5.74 [Removed]

5. Section 5.74 *Issuance, amendment, or repeal of regulations pertaining to drugs containing insulin* is removed.

PART 10—ADMINISTRATIVE PRACTICES AND PROCEDURES

6. The authority citation for 21 CFR part 10 continues to read as follows:

Authority: 21 U.S.C. 41–50, 141–149, 321–394, 467f, 679, 821, 1034; 42 U.S.C. 201, 262, 263b, 264; 15 U.S.C. 1451–1461; 5 U.S.C. 551–558, 701–721; 28 U.S.C. 2112.

§ 10.50 [Amended]

7. Section 10.50 *Promulgation of regulations and orders after an opportunity for a formal evidentiary public hearing* is amended by removing and reserving paragraph (c)(10).

PART 16—REGULATORY HEARING BEFORE THE FOOD AND DRUG ADMINISTRATION

8. The authority citation for 21 CFR part 16 continues to read as follows:

Authority: 21 U.S.C. 41–50, 141–149, 321–394, 467f, 679, 821, 1034; 42 U.S.C. 201, 262, 264; 15 U.S.C. 1451–1461; 28 U.S.C. 2112.

§ 16.1 [Amended]

9. Section 16.1 *Scope* is amended in paragraph (b)(2) by removing the entry for ''§ 429.50.''

PART 25—ENVIRONMENTAL IMPACT CONSIDERATIONS

10. The authority citation for 21 CFR part 25 continues to read as follows:

Authority: 21 U.S.C. 321–393; 42 U.S.C. 262, 263b–264; 42 U.S.C. 4321, 4332; 40 CFR parts 1500–1508; E.O. 11514, 35 FR 4247, 3 CFR, 1971 Comp., p. 531–533 as amended by E.O. 11991, 42 FR 26967, 3 CFR, 1978 Comp., p. 123–124 and E.O. 12114, 44 FR 1957, 3 CFR, 1980 Comp., p. 356–360.

§ 25.31 [Amended]

11. Section 25.31 *Human drugs and biologics* is amended in paragraph (f) by removing the words ''or insulin.''

PART 50—PROTECTION OF HUMAN SUBJECTS

12. The authority citation for 21 CFR part 50 is revised to read as follows:

Authority: 21 U.S.C. 321, 346, 346a, 348, 352, 353, 355, 357, 360, 360c–360f, 360h–360j, 371, 379e, 381; 42 U.S.C. 216, 241, 262, 263b–263n.

§ 50.1 [Amended]

13. Section 50.1 *Scope* is amended in the last sentence of paragraph (a) by removing the number ''506,''.

PART 56—INSTITUTIONAL REVIEW BOARDS

14. The authority citation for 21 CFR part 56 is revised to read as follows:

Authority: 21 U.S.C. 321, 346, 346a, 348, 351, 352, 353, 355, 357, 360, 360c–360f, 360h–360j, 371, 379e, 381; 42 U.S.C. 216, 241, 262, 263b–263n.

PART 58—GOOD LABORATORY PRACTICE FOR NONCLINICAL LABORATORY STUDIES

15. The authority citation for 21 CFR part 58 is revised to read as follows:

Authority: 21 U.S.C. 342, 346, 346a, 348, 351, 352, 353, 355, 357, 360, 360b–360f, 360h–360j, 371, 379e, 381; 42 U.S.C. 216, 262, 263b–263n.

PART 71—COLOR ADDITIVE PETITIONS

16. The authority citation for 21 CFR part 71 is revised to read as follows:

Authority: 21 U.S.C. 321, 342, 348, 351, 355, 357, 360, 360b–360f, 360h–360j, 361, 371, 379e, 381; 42 U.S.C. 216, 262.

PART 200—GENERAL

17. The authority citation for 21 CFR part 200 is revised to read as follows:

Authority: 21 U.S.C. 321, 331, 351, 352, 353, 355, 357, 358, 360e, 371, 374, 375.

18. Section 200.15 is revised to read as follows:

§ 200.15 Definition of term ''insulin.''

For purposes of sections 801 and 802 of the act and this title, the term insulin means the active principle of the pancreas that affects the metabolism of carbohydrates in the animal body and which is of value in the treatment of diabetes mellitus. The term includes synthetic and biotechnologically derived products that are the same as, or similar to, naturally occurring insulins in structure, use, and intended effect and are of value in the treatment of diabetes mellitus.

PART 201—LABELING

19. The authority citation for 21 CFR part 201 is revised to read as follows:

Authority: 21 U.S.C. 321, 331, 351, 352, 353, 355, 357, 358, 360, 360b, 360gg–360ss, 371, 374, 379e; 42 U.S.C. 216, 241, 262, 264.

§ 201.50 [Amended]

20. Section 201.50 *Statement of identity* is amended in paragraph (b) by removing the second sentence.

§ 201.100 [Amended]

21. Section 201.100 *Prescription drugs for human use* is amended in paragraph (c)(2) by removing the number '', 506,''.

PART 207—REGISTRATION OF PRODUCERS OF DRUGS AND LISTING OF DRUGS IN COMMERCIAL DISTRIBUTION

22. The authority citation for 21 CFR part 207 is revised to read as follows:

Authority: 21 U.S.C. 331, 351, 352, 355, 357, 360, 360b, 371, 374; 42 U.S.C. 262.

§ 207.25 [Amended]

23. Section 207.25 *Information required in registration and drug listing* is amended in paragraphs (b)(2), (b)(5), and (b)(6) by removing the number ''506,'' and in paragraph (b)(4) by removing the number '', 506,''.

§ 207.31 [Amended]

24. Section 207.31 *Additional drug listing information* is amended in paragraph (a)(1) by removing the number '', 506,'', and in paragraphs (a)(2), (a)(3), and (c) by removing the number ''506,''.

§ 207.37 [Amended]

25. Section 207.37 *Inspection of registrations and drug listings* is amended in paragraph (a)(2)(i) by removing the number ''506,''.

PART 210—CURRENT GOOD MANUFACTURING PRACTICE IN MANUFACTURING, PROCESSING, PACKING, OR HOLDING OF DRUGS; GENERAL

26. The authority citation for 21 CFR part 210 is revised to read as follows:

Authority: 21 U.S.C. 321, 351, 352, 355, 357, 360b, 371, 374.

PART 211—CURRENT GOOD MANUFACTURING PRACTICE FOR FINISHED PHARMACEUTICALS

27. The authority citation for 21 CFR part 211 is revised to read as follows:

Authority: 21 U.S.C. 321, 351, 352, 355, 357, 360b, 371, 374.

PART 310—NEW DRUGS

28. The authority citation for 21 CFR part 310 is revised to read as follows:

Authority: 21 U.S.C. 321, 331, 351, 352, 353, 355, 357, 360b–360f, 360j, 361(a), 371, 374, 375, 379e; 42 U.S.C. 216, 241, 242(a), 262, 263b–263n.

PART 312—INVESTIGATIONAL NEW DRUG APPLICATION

29. The authority citation for 21 CFR part 312 is revised to read as follows:

Authority: 21 U.S.C. 321, 331, 351, 352, 353, 355, 357, 371; 42 U.S.C. 262.

30. The authority citation for 21 CFR part 312, subpart E is revised to read as follows:

Authority: 21 U.S.C. 351, 352, 353, 355, 357, 371; 42 U.S.C. 262.

PART 314—APPLICATIONS FOR FDA APPROVAL TO MARKET A NEW DRUG OR AN ANTIBIOTIC DRUG

31. The authority citation for 21 CFR part 314 is revised to read as follows:

Authority: 21 U.S.C. 321, 331, 351, 352, 353, 355, 357, 371, 374, 379e.

§ 314.170 [Amended]

32. Section 314.170 *Adulteration and misbranding of an approved drug* is amended in the first sentence by removing the phrase ''under sections 505, 506, and 507'' and adding in its place the phrase ''under sections 505(j) and 507''.

§ 314.430 [Amended]

33. Section 314.430 *Availability for public disclosure of data and*

information in an application or abbreviated application is amended in paragraph (f)(6) by removing the phrase ''under sections 505(j), 506, and 507'' and adding in its place the phrase ''under sections 505(j) and 507''.

PART 369—INTERPRETATIVE STATEMENTS RE WARNINGS ON DRUGS AND DEVICES FOR OVER–THE–COUNTER SALE

34. The authority citation for 21 CFR part 369 is revised to read as follows:

Authority: 21 U.S.C. 321, 331, 351, 352, 353, 355, 357, 371.

§ 369.5 [Removed]

35. Section 369.5 *Warning required on insulin intended for over-the-counter sale* is removed

§ 369.21 [Amended]

36. Section 369.21 *Drugs; warning and caution statements required by regulations* is amended by removing the entry for ''INSULIN''.

PART 429—DRUGS COMPOSED WHOLLY OR PARTLY OF INSULIN

37. Under authority of section 701(a) of the Federal Food, Drug, and Cosmetic Act (21 U.S.C. 371(a)) and section 125(a) of the Food and Drug Modernization Act (Pub. L. 105–115), amend Title 21 of the Code of Federal Regulations by removing part 429.

PART 800—GENERAL

38. The authority citation for 21 CFR part 800 is revised to read as follows:

Authority: 21 U.S.C. 321, 334, 351, 352, 355, 357, 360e, 360i, 360k, 361, 362, 371.

PART 812—INVESTIGATIONAL DEVICE EXEMPTIONS

39. The authority citation for 21 CFR part 812 is revised to read as follows:

Authority: 21 U.S.C. 331, 351, 352, 353, 355, 357, 360, 360c–360f, 360h–360j, 371, 372, 374, 379e, 381, 382, 383; 42 U.S.C. 216, 241, 262, 263b–263n.

Dated: April 17, 1998.

William B. Schultz,

Deputy Commissioner for Policy.

[FR Doc. 98–12452 Filed 5–12–98; 8:45 am]

BILLING CODE 4160–01–F

DEPARTMENT OF HEALTH AND HUMAN SERVICES

Food and Drug Administration

21 CFR Parts 3, 5, 10, 16, 25, 50, 56, 58, 71, 200, 201, 207, 210, 211, 310, 312, 314, 369, 429, 800, and 812

[Docket No. 98N–0210]

Removal of Regulations Regarding Certification of Drugs Composed Wholly or Partly of Insulin

AGENCY: Food and Drug Administration, HHS.

ACTION: Direct final rule.

SUMMARY: The Food and Drug Administration (FDA) is repealing its regulations governing certification of drugs containing insulin and making conforming amendments to other sections of its regulations. The agency is taking this action in accordance with provisions of the Food and Drug Administration Modernization Act of 1997 (FDAMA). FDAMA repealed the statutory provision in the Federal Food, Drug, and Cosmetic Act (the act) under which the agency certified drugs containing insulin. FDAMA also made conforming amendments to the act. FDA is using direct final rulemaking for this action because the agency expects that there will be no significant adverse comment on the rule. Most of the amendments in this rule are a direct result of the repeal of the statutory certification provision. The remainder of the amendments repeal or update out-of-date, noncontroversial regulations dealing with insulin. Elsewhere in this issue of the **Federal Register**, FDA is publishing a companion proposed rule under FDA's usual procedure for notice-and-comment rulemaking to provide a procedural framework to finalize the rule in the event the agency receives significant adverse comments and withdraws this direct final rule.

DATES: This regulation is effective September 25, 1998. Submit written comments on or before July 27, 1998. If no timely significant adverse comments are received, the agency will publish a document in the **Federal Register** before August 26, 1998, confirming the effective date of the direct final rule. If timely significant adverse comments are received, the agency will publish a document of significant adverse comment in the **Federal Register** withdrawing this direct final rule before August 25, 1998.

ADDRESSES: Submit written comments to the Dockets Management Branch (HFA–305), Food and Drug Administration, 12420 Parklawn Dr., rm. 1–23, Rockville, MD 20857.

FOR FURTHER INFORMATION CONTACT: Wayne H. Mitchell, Center for Drug Evaluation and Research (HFD–7), Food and Drug Administration, 5600 Fishers Lane, Rockville, MD 20857, 301–594–2041.

SUPPLEMENTARY INFORMATION:

I. Background

On November 21, 1997, the President signed FDAMA (Pub. L. 105–115). Section 125(a) of FDAMA repealed section 506 of the act (21 U.S.C. 356). Section 506 was the section of the act under which the agency certified drugs composed wholly or partly of insulin. Section 125(a) of FDAMA also removed references to section 506 from section 301(i)(1) and (j) of the act (21 U.S.C. 331(i)(1) and (j)). Section 301(i) of the act prohibits fraudulent use of certain labeling required under various provisions of the act; while section 301(j) prohibits any person from using, or the unauthorized disclosure of, trade secret information obtained under authority of various provisions of the act.

Section 125(a) of FDAMA also repealed section 502(k) of the act (21 U.S.C. 352(k)), which provided that any drug that is, or is represented to be, composed wholly or partly of insulin is misbranded unless it has been certified or released under authority of section 506 of the act.

FDAMA also removed references to section 506 of the act in section 510(j)(1)(A) and (j)(1)(D) of the act (21 U.S.C. 360(j)(1)(A) and (j)(1)(D)), which is part of the drug listing provisions of the act, and section 125(a) of FDAMA amended a law governing procurement of drugs by certain Federal agencies (38 U.S.C. 8126(h)(2)) by removing a reference to drugs certified under authority of section 506 of the act.

FDAMA added drugs composed wholly or partly of insulin to the prohibition in section 801(d) of the act (21 U.S.C. 381(d)) against the reimportation of prescription drugs except by the original manufacturer. This amendment to section 801(d) of the act does not require implementing regulations. FDA will, however, place language reflecting this provision of FDAMA in relevant sections of a separate rule implementing the Prescription Drug Marketing Act of 1987 (Pub. L. 100–293). That rulemaking was initiated with the proposed rule published in the **Federal Register** of March 14, 1994 (59 FR 11842).

Finally, section 125(c) of FDAMA amended section 802 of the act (21 U.S.C. 382) to exempt insulin drugs from the export requirements of section 802 if the drugs meet the requirements of section 801(e)(1) of the act.

II. Direct Final Rulemaking

FDA has determined that the subjects of this rulemaking are suitable for a direct final rule. The actions taken should be noncontroversial, and the agency does not anticipate receiving any significant adverse comments.

The repeal of section 506 of the act eliminated the statutory provision on which the agency relied to certify drugs composed wholly or partly of insulin. FDA will, therefore, remove all provisions of title 21 of the Code of Federal Regulations (CFR) relating to the certification of insulin products. FDA will also make various ministerial changes to title 21, such as removing references to section 506 of the act in authority sections and regulations whose subjects are not certification of insulin.

FDA has also determined that it is appropriate to use direct final rulemaking to update the definition of insulin in § 200.15 (21 CFR 200.15). The statutory references in the definition are being changed to reflect changes in the law and the scope of the definition is being clarified to reflect the existence of new forms of insulin that have been introduced since the definition was originally issued.

If FDA does not receive significant adverse comment on or before July 27, 1998, the agency will publish a document in the **Federal Register** before August 25, 1998, confirming the effective date of the direct final rule. A significant adverse comment is one that explains why the rule would be inappropriate, including challenges to the rule's underlying premise or approach, or would be ineffective or unacceptable without a change. A comment recommending a rule change in addition to this rule will not be considered a significant adverse comment, unless the comment states why this rule would be ineffective without the additional change. If timely significant adverse comments are received, the agency will publish a document of significant adverse comment in the **Federal Register** withdrawing this direct final rule before August 26, 1998.

The companion proposed rule, which is identical to the direct final rule, provides a procedural framework within which the rule may be finalized in the event the direct final rule is withdrawn because of significant adverse comment. The comment period for the direct final rule runs concurrently with that of the

companion proposed rule. Any comments received under the companion proposed rule will be treated as comments regarding the direct final rule. Likewise, significant adverse comments submitted to the direct final rule will be considered comments to the companion proposed rule, and the agency will consider such comments in developing a final rule. FDA will not provide additional opportunity for comment on the companion proposed rule.

If a significant adverse comment applies to part of this rule and that part may be severed from the remainder of the rule, FDA may adopt as final those parts of the rule that are not the subject of a significant adverse comment. A full description of FDA's policy on direct final rule procedures may be found in a guidance document published in the **Federal Register** of November 21, 1997 (62 FR 62466).

III. Description of the Rule

The rule eliminates references to section 506 of the act in all authority citations in 21 CFR, chapter I.

The rule amends the delegation of authority provisions in 21 CFR part 5 to eliminate provisions dealing with the authority to sign citizen petitions regarding the certification of insulin, the authority to certify batches of insulin, and the authority to issue regulations under section 506 of the act pertaining to drugs containing insulin.

The rule eliminates a reference to section 506(c) of the act in 21 CFR 10.50, which deals with issuance of regulations and orders after an opportunity for a formal evidentiary public hearing. Former section 506(c) of the act dealt with the issuance of insulin regulations prescribing tests or methods of assay for batch certification that differed from those specified in an official compendium.

The rule removes a reference to 21 CFR 429.50, which relates to suspension of certification services for certain persons, in 21 CFR 16.1, which defines the scope of 21 CFR part 16.

The regulations in 21 CFR 25.31 (see 62 FR 40570 at 40595, July 29, 1997) are amended to eliminate testing and certification of batches of insulin under section 506 of the act from a list of actions that are categorically excluded from the requirement to prepare an environmental assessment or an environmental impact statement.

The rule removes a reference to section 506 of the act in 21 CFR 50.1, which defines the scope of 21 CFR part 50.

This rule amends the statutory references in the definition of insulin found in § 200.15 to reflect the repeal of sections 502(k) and 506 of the act; the addition of insulin drug products to the reimportation provision of section 801(d) of the act by FDAMA; the use of the term ''insulin'' in the export labeling provisions of section 801(f) of the act, which was added by the Technical Amendments to the FDA Export Reform and Enhancement Act of August 6, 1996 (Pub. L. 104–180); and FDAMA's addition of section 802(i) to the act, which exempts insulin drugs from the export requirements of section 802 of the act. The new definition also clarifies the scope of the term ''insulin'' to reflect the existence of synthetic and biotechnologically derived human insulin. The definition is designed to encompass chemical analogs of insulin, the first of which, insulin lispro (an Eli Lilly & Co. product), was recently approved.

The labeling requirements found in part 201 (21 CFR part 201) are being amended by this rule. Section 201.50(b) is amended to remove a sentence that refers to labeling requirements contained in part 429 (21 CFR part 429), which is also being eliminated by this rule. A reference to section 506 of the act is being removed from § 201.100(c)(2).

Several references to section 506 of the act are being removed from 21 CFR parts 207 and 314.

FDA is repealing all of part 429 and those portions of part 369 (21 CFR part 369) that deal with insulin drug products.

Part 429 contains the primary provisions the agency has relied on to carry out the batch certification of drugs composed wholly or partly of insulin. Subpart A of part 429 defines key terms used in the insulin certification regulations; subpart B of part 429 contains packaging and labeling requirements for products subject to batch certification; subparts C and D of part 429 contain applicable standards and tests and methods of assay for determining whether batches of insulin may be certified; subpart E of part 429 contains the requirements for submitting a request for certification; subpart F of part 429 contains the administrative procedures and fees applicable to insulin certification; and subpart G of part 429 imposes additional recordkeeping requirements applicable to batch certified insulin products. With the repeal of section 506 of the act, and the elimination of the insulin batch certification program, the agency is eliminating these subparts.

The agency notes that several of the provisions in part 429, such as those covering packaging and labeling and tests and methods of assay, could be retained under provisions of the act other than section 506 of the act. However, the agency has determined, as explained in this section of this document, that it would not be appropriate or necessary to do so at this time.

The current regulations in § 429.10 require insulin drug products to be packaged in sterile immediate containers with closures through which the insulin may be withdrawn with a conventional hypodermic syringe and needle. Section 429.10 also provides for distinctive containers for certain insulin drug products, none of which is currently marketed. Although all insulin drug products are currently marketed in immediate containers that meet the requirements contained in § 429.10, there is no assurance that a new, safe, and effective container/closure system would conform to the regulation. To avoid having to amend the regulation each time a new, acceptable container/closure system is developed, the agency is removing § 429.10 and, instead, will rely on the new drug approval process to approve appropriate container/closure systems for drug products containing insulin. Applicants for drug products containing insulin submit descriptions of the container/closure system with the new drug application (NDA); FDA reviews the container/closure system for use with the drug product and, if appropriate, approves its use with the drug product as part of the NDA approval. This system is used to approve container/closure systems for most new drug products on the market today, and it provides the flexibility necessary to provide for approval of new, safe, and effective container/closure systems.

The current regulations in §§ 369.21, 429.11, and by cross reference § 369.5, set out detailed requirements for the labeling of insulin drug products. The current regulations require, among other information and warnings, information on potency of the drug product, expiration date of the lot, storage instructions, instructions on injecting insulin, and descriptions of how the type of insulin-containing drug product differs from other types of insulin drug products.

FDA is removing §§ 369.5 and 429.11 and those portions of § 369.21 that apply to insulin drug products, and will rely on the new drug approval process, in conjunction with the general drug labeling requirements found in part 201, to establish appropriate labeling requirements for each drug product containing insulin. Applicants submit copies of proposed labeling with the

marketing applications for all new drug products, including those containing insulin; FDA then reviews the application and, if appropriate, approves it, after the applicant has made necessary changes. This system is used to establish labeling for most new drug products and provides the flexibility necessary to provide adequate labeling for new types of insulin drug products. Because all currently marketed insulin drug products are the subject of effective NDA's under section 505(b) of the act, the labeling of these products is not expected to change as a result of the removal of these rules.

The current regulations in § 429.12 contain a distinguishing color scheme, which is outdated. The current system includes distinguishing colors for 40 units per milliliter strengths of insulin drug products, which are no longer being marketed. It also provides an identifying color scheme for insulin zinc globin, which is also not marketed. Under § 429.12, most of the currently marketed insulin drug products are identified by the color combination of black and white, which provides limited usefulness. No provisions are made for either of the two types of mixtures of human insulin and insulin suspension isophane currently being marketed or insulin lispro, a human insulin analogue. Accordingly, FDA is removing § 429.12.

Major insulin manufacturers, working with the International Diabetes Federation (IDF), have developed a new color coding system in which each type of insulin would be identified with a distinctive color. FDA has been favorably impressed with the IDF system. However, the agency believes that it is administratively more efficient to remove part 429 in its entirety at this time, and implement the IDF system in a separate rulemaking proceeding or incorporate it into a guidance issued under FDA's ''Good Guidance Practices'' published in the **Federal Register** of February 27, 1997 (62 FR 8961).

FDA is also removing § 429.25, which establishes standards of quality and purity for protamine, and § 429.26, which establishes standards of quality and purity for globin hydrochloride. (No insulin products using globin hydrochloride are currently being marketed.) FDA does not, at this time, intend to issue regulations directly establishing other product standards relating to drugs composed wholly or partly of insulin. Insulin manufacturers and FDA laboratories use the requirements set out in the approved NDA for analyzing an insulin drug product and, where appropriate, the standards set out in the United States Pharmacopeia (USP).

FDA is also removing § 429.30, which sets out testing and assay methods. Section 429.30 provides, generally, that insulin injection, insulin suspension protamine zinc, insulin zinc globin, insulin suspension isophane, insulin zinc suspension, insulin zinc suspension prompt, and insulin zinc suspension extended be tested and assayed according to methods set out in the USP. Section 429.30 also provides tests for isophane ratio, chloride in globin hydrochloride, sulfate in protamine, nitrogen, and zinc. At least one of these products (insulin zinc globin) is no longer marketed. The tests and methods of assay for the remaining products are either outdated or if still in use, have been incorporated into the applicable NDA.

FDA intends to avoid the potential for this type of outdated, codified specification by not proposing at this time regulations specifying testing or assay methods. Instead, insulin will be required to conform to all applicable USP monographs and the approved NDA for each product. This will mean that insulin drug products will be regulated just as other new drugs are regulated by FDA.

IV. Environmental Impact

The agency has determined under 21 CFR 25.24(h) that this action is of a type that does not individually or cumulatively have a significant effect on the human environment. Therefore, neither an environmental assessment nor an environmental impact statement is required.

V. Analysis of Impacts

FDA has examined the impacts of the direct final rule under Executive Order 12866, the Regulatory Flexibility Act (5 U.S.C. 601–612), and the Unfunded Mandates Reform Act of 1995 (Pub. L. 104–4). Executive Order 12866 directs agencies to assess all costs and benefits of available regulatory alternatives and, when regulation is necessary, to select regulatory approaches that maximize net benefits (including potential economic, environmental, public health and safety, and other advantages; distributive impacts; and equity). Executive Order 12866 classifies a rule as significant if it meets any one of a number of specified conditions, including having an annual effect on the economy of $100 million or adversely affecting in a material way a sector of the economy, competition, or jobs, or if it raises novel legal or policy issues. As discussed below, the agency believes that this final rule is consistent with the regulatory philosophy and principles identified in the Executive Order. In addition, the direct final rule is not a significant regulatory action as defined by the Executive Order and so is not subject to review under the Executive Order.

The Regulatory Flexibility Act requires agencies to analyze regulatory options to minimize any significant impact on small entities. The only two manufacturers currently marketing insulin drug products in the United States are not small entities. Furthermore, by eliminating the certification process, this direct final rule would lower market entry barriers for small entities. The agency certifies that the direct final rule will not have a significant impact on a substantial number of small entities. Therefore, under the Regulatory Flexibility Act, no further analysis is required.

The Unfunded Mandates Reform Act requires an agency to prepare a budgetary impact statement before issuing any rule likely to result in a Federal mandate that may result in expenditures by State, local, and tribal governments or the private sector of $100 million (adjusted annually for inflation) in any 1 year. The elimination of the insulin certification program will lower the costs of marketing insulin drug products, by eliminating both the direct cost of applying for certification and the cost of holding batches of insulin while awaiting certification. Because this rule will not result in an expenditure of $100 million or more on any governmental entity or the private sector, no budgetary impact statement is required.

VI. Paperwork Reduction Act of 1995

This direct final rule contains no collections of information. Therefore, clearance by the Office of Management and Budget under the Paperwork Reduction Act of 1995 is not required.

VII. Request for Comments

Interested persons may, on or before July 27, 1998, submit to the Dockets Management Branch (address above) written comments regarding this proposal. Two copies of any comments are to be submitted, except that individuals may submit one copy. Comments are to be identified with the docket number found in brackets in the heading of this document. Received comments may be seen in the office above between 9 a.m. and 4 p.m., Monday through Friday.

List of Subjects

21 CFR Part 3

Administrative practice and procedure, Biologics, Drugs, Medical devices.

21 CFR Part 5

Authority delegations (Government agencies), Imports, Organization and functions (Government agencies).

21 CFR Part 10

Administrative practice and procedure, News media.

21 CFR Part 16

Administrative practice and procedure.

21 CFR Part 25

Environmental impact statements, Foreign relations, Reporting and recordkeeping requirements.

21 CFR Part 50

Human research subjects, Prisoners, Reporting and recordkeeping requirements, Safety.

21 CFR Part 56

Human research subjects, Reporting and recordkeeping requirements, Safety.

21 CFR Part 58

Laboratories, Reporting and recordkeeping requirements.

21 CFR Part 71

Administrative practice and procedure, Color additives, Confidential business information, Cosmetics, Drugs, Reporting and recordkeeping requirements.

21 CFR Part 200

Drugs, Prescription drugs.

21 CFR Part 201

Drugs, Labeling, Reporting and recordkeeping requirements.

21 CFR 207

Drugs, Reporting and recordkeeping requirements.

21 CFR 210

Drugs, Packaging and containers.

21 CFR Part 211

Drugs, Labeling, Laboratories, Packaging and containers, Prescription drugs, Reporting and recordkeeping requirements, Warehouses.

21 CFR Part 310

Administrative practice and procedure, Drugs, Labeling, Medical devices, Reporting and recordkeeping requirements.

21 CFR Part 312

Drugs, Exports, Imports, Investigations, Labeling, Medical research, Reporting and recordkeeping requirements, Safety.

21 CFR Part 314

Administrative practice and procedure, Confidential business information, Drugs, Reporting and recordkeeping requirements.

21 CFR Part 369

Labeling, Medical devices, Over-the-counter drugs.

21 CFR Part 429

Administrative practice and procedure, Drugs, Labeling, Packaging and containers, Reporting and recordkeeping requirements.

21 CFR Part 800

Administrative practice and procedure, Medical devices, Ophthalmic goods and services, Packaging and containers, Reporting and recordkeeping requirements.

21 CFR Part 812

Health records, Medical devices, Medical research, Reporting and recordkeeping requirements.

Therefore, under the Federal Food, Drug, and Cosmetic Act and under authority delegated to the Commissioner of Food and Drugs, 21 CFR parts 3, 5, 10, 16, 25, 50, 56, 58, 71, 200, 201, 207, 210, 211, 310, 312, 314, 369, 429, 800, and 812 are amended as follows:

PART 3—PRODUCT JURISDICTION

1. The authority citation for 21 CFR part 3 is revised to read as follows:

Authority: 21 U.S.C. 321, 351, 352, 353, 355, 357, 360, 360c–360f, 360h–360j, 360gg–360ss, 371(a), 379e, 381, 394; 42 U.S.C. 216, 262.

PART 5—DELEGATIONS OF AUTHORITY AND ORGANIZATION

2. The authority citation for 21 CFR part 5 continues to read as follows:

Authority: 5 U.S.C. 504, 552, App. 2; 7 U.S.C. 138a, 2271; 15 U.S.C. 638, 1261–1282, 3701–3711a; 15 U.S.C. 1451–1461; 21 U.S.C. 41–50, 61–63, 141–149, 321–394, 467f, 679(b), 801–886, 1031–1309; 35 U.S.C. 156; 42 U.S.C. 241, 242, 242a, 242l, 242n, 243, 262, 263, 264, 265, 300u–300u–5, 300aa–1; 1395y, 3246b, 4332, 4831(a), 10007–10008; E.O. 11921, 41 FR 24294, 3 CFR, 1977 Comp., p. 124–131; E.O. 12591, 52 FR 13414, 3 CFR, 1988 Comp., p. 220–223.

§ 5.31 [Amended]

3. Section 5.31 *Petitions under part 10* is amended by removing and reserving paragraphs (f)(2)(iii) and (f)(2)(iv).

§ 5.73 [Removed]

4. Section 5.73 *Certification of insulin* is removed.

§ 5.74 [Removed]

5. Section 5.74 *Issuance, amendment, or repeal of regulations pertaining to drugs containing insulin* is removed.

PART 10—ADMINISTRATIVE PRACTICES AND PROCEDURES

6. The authority citation for 21 CFR part 10 continues to read as follows:

Authority: 21 U.S.C. 41–50, 141–149, 321–394, 467f, 679, 821, 1034; 42 U.S.C. 201, 262, 263b, 264; 15 U.S.C. 1451–1461; 5 U.S.C. 551–558, 701–721; 28 U.S.C. 2112.

§ 10.50 [Amended]

7. Section 10.50 *Promulgation of regulations and orders after an opportunity for a formal evidentiary public hearing* is amended by removing and reserving paragraph (c)(10).

PART 16—REGULATORY HEARING BEFORE THE FOOD AND DRUG ADMINISTRATION

8. The authority citation for 21 CFR part 16 continues to read as follows:

Authority: 21 U.S.C. 41–50, 141–149, 321–394, 467f, 679, 821, 1034; 42 U.S.C. 201, 262, 264; 15 U.S.C. 1451–1461; 28 U.S.C. 2112.

§ 16.1 [Amended]

9. Section 16.1 *Scope* is amended in paragraph (b)(2) by removing the entry for ''§ 429.50.''

PART 25—ENVIRONMENTAL IMPACT CONSIDERATIONS

10. The authority citation for 21 CFR part 25 continues to read as follows:

Authority: 21 U.S.C. 321–393; 42 U.S.C. 262, 263b–264; 42 U.S.C. 4321, 4332; 40 CFR parts 1500–1508; E.O. 11514, 35 FR 4247, 3 CFR, 1971 Comp., p. 531–533 as amended by E.O. 11991, 42 FR 26967, 3 CFR, 1978 Comp., p. 123–124 and E.O. 12114, 44 FR 1957, 3 CFR, 1980 Comp., p. 356–360.

§ 25.31 [Amended]

11. Section 25.31 *Human drugs and biologics* is amended in paragraph (f) by removing the words ''or insulin.''

PART 50—PROTECTION OF HUMAN SUBJECTS

12. The authority citation for 21 CFR part 50 is revised to read as follows:

Authority: 21 U.S.C. 321, 346, 346a, 348, 352, 353, 355, 357, 360, 360c–360f, 360h–360j, 371, 379e, 381; 42 U.S.C. 216, 241, 262, 263b–263n.

§ 50.1 [Amended]

13. Section 50.1 *Scope* is amended in the last sentence of paragraph (a) by removing the number ''506,''.

PART 56—INSTITUTIONAL REVIEW BOARDS

14. The authority citation for 21 CFR part 56 is revised to read as follows:

Authority: 21 U.S.C. 321, 346, 346a, 348, 351, 352, 353, 355, 357, 360, 360c–360f, 360h–360j, 371, 379e, 381; 42 U.S.C. 216, 241, 262, 263b–263n.

PART 58—GOOD LABORATORY PRACTICE FOR NONCLINICAL LABORATORY STUDIES

15. The authority citation for 21 CFR part 58 is revised to read as follows:

Authority: 21 U.S.C. 342, 346, 346a, 348, 351, 352, 353, 355, 357, 360, 360b–360f, 360h–360j, 371, 379e, 381; 42 U.S.C. 216, 262, 263b–263n.

PART 71—COLOR ADDITIVE PETITIONS

16. The authority citation for 21 CFR part 71 is revised to read as follows:

Authority: 21 U.S.C. 321, 342, 348, 351, 355, 357, 360, 360b–360f, 360h–360j, 361, 371, 379e, 381; 42 U.S.C. 216, 262.

PART 200—GENERAL

17. The authority citation for 21 CFR part 200 is revised to read as follows:

Authority: 21 U.S.C. 321, 331, 351, 352, 353, 355, 357, 358, 360e, 371, 374, 375.

18. Section 200.15 is revised to read as follows:

§ 200.15 Definition of term ''insulin.''

For purposes of sections 801 and 802 of the act and this title, the term insulin means the active principle of the pancreas that affects the metabolism of carbohydrates in the animal body and which is of value in the treatment of diabetes mellitus. The term includes synthetic and biotechnologically derived products that are the same as, or similar to, naturally occurring insulins in structure, use, and intended effect and are of value in the treatment of diabetes mellitus.

PART 201—LABELING

19. The authority citation for 21 CFR part 201 is revised to read as follows:

Authority: 21 U.S.C. 321, 331, 351, 352, 353, 355, 357, 358, 360, 360b, 360gg–360ss, 371, 374, 379e; 42 U.S.C. 216, 241, 262, 264.

§ 201.50 [Amended]

20. Section 201.50 *Statement of identity* is amended in paragraph (b) by removing the second sentence.

§ 201.100 [Amended]

21. Section 201.100 *Prescription drugs for human use* is amended in paragraph (c)(2) by removing the number '', 506,''.

PART 207—REGISTRATION OF PRODUCERS OF DRUGS AND LISTING OF DRUGS IN COMMERCIAL DISTRIBUTION

22. The authority citation for 21 CFR part 207 is revised to read as follows:

Authority: 21 U.S.C. 331, 351, 352, 355, 357, 360, 360b, 371, 374; 42 U.S.C. 262.

§ 207.25 [Amended]

23. Section 207.25 *Information required in registration and drug listing* is amended in paragraphs (b)(2), (b)(5), and (b)(6) by removing the number ''506,'' and in paragraph (b)(4) by removing the number '', 506,''.

§ 207.31 [Amended]

24. Section 207.31 *Additional drug listing information* is amended in paragraph (a)(1) by removing the number '', 506,'', and in paragraphs (a)(2), (a)(3), and (c) by removing the number ''506,''.

§ 207.37 [Amended]

25. Section 207.37 *Inspection of registrations and drug listings* is amended in paragraph (a)(2)(i) by removing the number ''506,''.

PART 210—CURRENT GOOD MANUFACTURING PRACTICE IN MANUFACTURING, PROCESSING, PACKING, OR HOLDING OF DRUGS; GENERAL

26. The authority citation for 21 CFR part 210 is revised to read as follows:

Authority: 21 U.S.C. 321, 351, 352, 355, 357, 360b, 371, 374.

PART 211—CURRENT GOOD MANUFACTURING PRACTICE FOR FINISHED PHARMACEUTICALS

27. The authority citation for 21 CFR part 211 is revised to read as follows:

Authority: 21 U.S.C. 321, 351, 352, 355, 357, 360b, 371, 374.

PART 310—NEW DRUGS

28. The authority citation for 21 CFR part 310 is revised to read as follows:

Authority: 21 U.S.C. 321, 331, 351, 352, 353, 355, 357, 360b–360f, 360j, 361(a), 371, 374, 375, 379e; 42 U.S.C. 216, 241, 242(a), 262, 263b–263n.

PART 312—INVESTIGATIONAL NEW DRUG APPLICATION

29. The authority citation for 21 CFR part 312 is revised to read as follows:

Authority: 21 U.S.C. 321, 331, 351, 352, 353, 355, 357, 371; 42 U.S.C. 262.

30. The authority citation for 21 CFR part 312, subpart E is revised to read as follows:

Authority: 21 U.S.C. 351, 352, 353, 355, 357, 371; 42 U.S.C. 262.

PART 314—APPLICATIONS FOR FDA APPROVAL TO MARKET A NEW DRUG OR AN ANTIBIOTIC DRUG

31. The authority citation for 21 CFR part 314 is revised to read as follows:

Authority: 21 U.S.C. 321, 331, 351, 352, 353, 355, 357, 371, 374, 379e.

§ 314.170 [Amended]

32. Section 314.170 *Adulteration and misbranding of an approved drug* is amended in the first sentence by removing the phrase ''under sections 505, 506, and 507'' and adding in its place the phrase ''under sections 505(j) and 507''.

§ 314.430 [Amended]

33. Section 314.430 *Availability for public disclosure of data and information in an application or abbreviated application* is amended in paragraph (f)(6) by removing the phrase ''under sections 505(j), 506, and 507'' and adding in its place the phrase ''under sections 505(j) and 507''.

PART 369—INTERPRETATIVE STATEMENTS RE WARNINGS ON DRUGS AND DEVICES FOR OVER–THE–COUNTER SALE

34. The authority citation for 21 CFR part 369 is revised to read as follows:

Authority: 21 U.S.C. 321, 331, 351, 352, 353, 355, 357, 371.

§ 369.5 [Removed]

35. Section 369.5 *Warning required on insulin intended for over-the-counter sale* is removed.

§ 369.21 [Amended]

36. Section 369.21 *Drugs; warning and caution statements required by regulations* is amended by removing the entry for ''INSULIN''.

PART 429—DRUGS COMPOSED WHOLLY OR PARTLY OF INSULIN

Part 429 [Removed]

37. Under authority of section 701(a) of the Federal Food, Drug, and Cosmetic Act (21 U.S.C. 371(a)) and section 125(a) of the Food and Drug Modernization Act (Pub. L. 105–115), amend Title 21 of the Code of Federal Regulations by removing part 429.

PART 800—GENERAL

38. The authority citation for 21 CFR part 800 is revised to read as follows:

Authority: 21 U.S.C. 321, 334, 351, 352, 355, 357, 360e, 360i, 360k, 361, 362, 371.

PART 812—INVESTIGATIONAL DEVICE EXEMPTIONS

39. The authority citation for 21 CFR part 812 is revised to read as follows:

Authority: 21 U.S.C. 331, 351, 352, 353, 355, 357, 360, 360c–360f, 360h–360j, 371, 372, 374, 379e, 381, 382, 383; 42 U.S.C. 216, 241, 262, 263b–263n.

Dated: April 17, 1998.

William B. Schultz,

Deputy Commissioner for Policy.

[FR Doc. 98–12452 Filed 5–12–98; 8:45 am]

BILLING CODE 4160–01–F

federal register

Wednesday
May 13, 1998

Part IV

Department of Housing and Urban Development

24 CFR Parts 200 and 207

Electronic Submission of Required Data by Multifamily Mortgagees to Report Mortgage Delinquencies, Defaults, Reinstatements, Assignment Elections, and Withdrawals of Assignment Elections; Proposed Rule

DEPARTMENT OF HOUSING AND URBAN DEVELOPMENT

24 CFR Parts 200 and 207

[Docket No. FR–4303–P–01]

RIN 2502–AH11

Electronic Submission of Required Data by Multifamily Mortgagees to Report Mortgage Delinquencies, Defaults, Reinstatements, Assignment Elections, and Withdrawals of Assignment Elections

AGENCY: Office of the Assistant Secretary for Housing-Federal Housing Commissioner, HUD.

ACTION: Proposed rule; Notice of proposed information collection requirements.

SUMMARY: This proposed rule would require mortgagees that hold or service multifamily mortgages insured by HUD to submit certain data electronically to HUD in a HUD prescribed format. Electronic submission is necessary because the manual submission of HUD forms has become a burden to servicing mortgagees, as well as to HUD. This proposed rule would apply to all multifamily mortgagees in their responsibility to report mortgage delinquencies, mortgage defaults, mortgage reinstatements, elections to assign mortgages to HUD, and withdrawal of assignment elections.

DATES: *Comment due date:* July 13, 1998.

ADDRESSES: Interested persons are invited to submit comments regarding this proposed rule to the Rules Docket Clerk, Office of the General Counsel, Room 10276, Department of Housing and Urban Development, 451 Seventh Street, SW, Washington, DC 20410. Communications should refer to the above docket number and title. Facsimile (FAX) comments are not acceptable. A copy of each comment submitted will be available for public inspection and copying during regular business hours (7:30 a.m. to 5:30 p.m.) eastern time at the above address.

FOR FURTHER INFORMATION CONTACT: Willie Spearmon, Director, Office of Business Products, Room 6134, Department of Housing and Urban Development, 451 Seventh Street, SW, Washington, DC 20410, telephone (202) 708–3000 (this is not a toll-free number). Individuals with hearing or speech impairments may access this number via TTY by calling the Federal Information Relay Service at (800) 877–8339 (this is a toll-free number).

SUPPLEMENTARY INFORMATION:

I. Background

HUD obtains data regarding the status of delinquent insured mortgage loans on multifamily projects by using Form HUD–92426, *Multifamily Default Status Report.* HUD needs the information submitted on the form in order to monitor mortgage loans for which the mortgagees are experiencing payment or other difficulties. In accordance with the requirements of 24 CFR part 207, the mortgagee must prepare and sign this form under the specified circumstances and mail it to HUD. When HUD receives the form, it must sign it and return it to the mortgagee to acknowledge receipt of the form.

To replace this burdensome paperwork process, HUD has developed a method for mortgagees to submit the data currently collected on Form HUD–92426, as well as to report the date of the mortgagees' last physical inspection of the project, using the Internet. According to this new method, the mortgagee will electronically submit the required data to HUD, after which an electronic receipt will automatically be returned. HUD will provide, at no cost to mortgagees, ''stand alone'' software and technical support for that software, which is designed to run on IBM-compatible personal computers (PCs). Mortgagees will, however, need to provide their own PCs and Internet connections. Mortgagees that do not choose to initiate Internet access for themselves may contract with another entity or individual to act on their behalf to report the data electronically; HUD believes that this is not likely to be necessary in most cases.

One of HUD's primary concerns is the costs mortgagees may incur in establishing Internet access if they have not already done so. For this reason, HUD has decided to allow for a staggered implementation of this rulemaking, under which smaller mortgagees would be given more time to comply with the new electronic reporting requirements. HUD believes, however, that electronic tracking of the default and reinstatement data generally will reduce costs for mortgagees. HUD has field-tested electronic submission of this data on a voluntary pilot basis with a number of mortgagees, and has received generally favorable responses.

While HUD hopes to begin implementing the electronic reporting requirements in this rule in July 1998, HUD encourages mortgagees to comply with these requirements voluntarily to the extent possible, in order for the mortgagees and HUD to realize an early advantage of cost savings.

II. This Proposed Rule

This document proposes to amend the regulations in 24 CFR parts 200 and 207 related to multifamily housing mortgage insurance, in order to require mortgagees with insured multifamily mortgage loans to submit information reporting mortgage delinquencies, defaults, reinstatements, assignment elections, and withdrawals of assignment elections electronically, rather than in writing on Form HUD–92426. Specifically, this document proposes to amend the regulations as follows:

(1) This proposed rule would add a new subpart B to part 200, entitled ''Electronic Submission of Required Data for Mortgage Defaults and Mortgage Insurance Claims for Insured Multifamily Mortgages.'' This new subpart B would require multifamily mortgagees to submit the data electronically, and it would provide the staggered schedule of effectiveness. As mentioned above, HUD would allow smaller mortgagees (i.e., those with fewer insured mortgage loans) more time to comply with the electronic submission requirements. This new subpart would also provide for an exception to the electronic submission requirements, subject to HUD approval, for very small mortgagees for which compliance would represent a financial hardship.

(2) This document also proposes several conforming changes to the current requirements in part 207. In § 207.256, which requires mortgagees to notify HUD of defaults, this document proposes to require mortgagees to notify HUD in the manner prescribed in the new subpart B of part 200, rather than in writing. This document would similarly amend § 207.256a, which requires mortgagees to notify HUD if a mortgage loan is reinstated, and § 207.258, which requires mortgagees to notify HUD if they elect to assign a mortgage to HUD or to acquire a property and convey title to HUD.

III. Other Matters

A. Paperwork Burden

The information collection requirements contained in this proposed rule have been submitted to the Office of Management and Budget (OMB) for review in accordance with the Paperwork Reduction Act of 1995 (44 U.S.C. 3501–3520).

In accordance with 5 CFR 1320.5(a)(1)(iv), HUD is setting forth the following concerning the proposed collection of information:

Description	Number of respondents	Total annual response	Minutes per response	Total hours
Electronic transfer of information	420	2000	10	333

Interested persons are invited to submit comments regarding the information collection requirements in this proposed rule. Comments must be received within 60 days of the date of this proposal. Comments must refer to the proposed rule by name and docket number (FR 4303), and must be sent to Joseph F. Lackey, Jr., HUD Desk Officer, Office of Management and Budget, New Executive Office Building, Washington, DC 20503.

B. Regulatory Flexibility Act

The Secretary, in accordance with the Regulatory Flexibility Act (5 U.S.C. 605(b)), has reviewed this proposed rule before publication and by approving it certifies that this proposed rule would not have a significant economic impact on a substantial number of small entities. The electronic submission requirements in this proposed rule should reduce burden and costs for all mortgagees. As stated above, HUD will also reduce the burden on mortgagees by providing the software and technical support necessary to facilitate the electronic submission requirements. Therefore, HUD has determined that this proposed rule would not have a significant economic impact on a substantial number of small entities. Notwithstanding this determination, HUD specifically invites comments regarding alternatives to this proposed rule that will meet HUD's objectives as described in this preamble.

C. Environmental Impact

This proposed rule is categorically excluded from environmental review under the National Environmental Policy Act (42 U.S.C. 4321). The proposed addition to part 200 of a new subpart B falls within the exclusion provided by 24 CFR 50.19(c)(1), in that it does not direct, provide for assistance or loan and mortgage insurance for, or otherwise govern or regulate, real property acquisition, disposition, leasing, rehabilitation, alteration, demolition, or new construction, or establish, revise, or provide for standards for construction or construction materials, manufactured housing, or occupancy. The proposed amendments to part 207 are categorically excluded under 24 CFR 50.19(c)(2), because they amend an existing document, and the existing document as a whole would not fall within the exclusion in 24 CFR 50.19(c)(1), but the amendments by themselves would.

D. Executive Order 12612, Federalism

The General Counsel, as the Designated Official under section 6(a) of Executive Order 12612, *Federalism*, has determined that the policies contained in this proposed rule would not have substantial direct effects on States or their political subdivisions, on the relationship between the Federal Government and the States, or on the distribution of power and responsibilities among the various levels of government. This proposed rule relates only to the manner in which mortgagees submit required information to HUD, and it would not affect the federalism concerns addressed in the Order. As a result, this proposed rule is not subject to review under the Order.

E. Unfunded Mandates Reform Act

Title II of the Unfunded Mandates Reform Act of 1995 (Pub. L. 104–4; approved March 22, 1995) (UMRA) establishes requirements for Federal agencies to assess the effects of their regulatory actions on State, local, and tribal governments, and on the private sector. This rule would not impose any Federal mandates on any State, local, or tribal government, or on the private sector, within the meaning of the UMRA.

F. Catalog of Federal Domestic Assistance

The Catalog of Federal Domestic Assistance number is 14.155.

List of Subjects

24 CFR Part 200

Administrative practice and procedure, Claims, Equal employment opportunity, Fair housing, Home improvement, Housing standards, Lead poisoning, Loan programs—housing and community development, Minimum property standards, Mortgage insurance, Organization and functions (Government agencies), Penalties, Reporting and recordkeeping requirements, Social security, Unemployment compensation, Wages.

24 CFR Part 207

Manufactured homes, Mortgage insurance, Reporting and recordkeeping requirements, Solar energy.

Accordingly, 24 CFR Chapter II is proposed to be amended as follows:

PART 200—INTRODUCTION TO FHA PROGRAMS

1. The authority citation for 24 CFR part 200 continues to read as follows:

Authority: 12 U.S.C. 1701–1715z–18; 42 U.S.C. 3535(d).

2. In part 200, a new subpart B, consisting of §§ 200.120 through 200.121, is added to read as follows:

Subpart B—Electronic Submission of Required Data for Mortgage Defaults and Mortgage Insurance Claims for Insured Multifamily Mortgages

Sec.
200.120 Purpose and applicability.
200.121 Requirements and effectiveness.

§ 200.120 Purpose and applicability.

(a) *Purpose.* The purpose of this subpart B is to require mortgagees of all multifamily projects whose mortgages are insured or coinsured by HUD to submit electronically information regarding mortgage delinquencies, defaults, reinstatements, elections to assign, and withdrawals of assignment elections, and related information, as that information is required by 24 CFR part 207 and Form HUD–92426 (which is available at the Department of Housing and Urban Development, HUD Custom Service Center, 451 7th Street, SW, Room B–100, Washington, DC 20410; telephone (800) 767–7465).

(b) *Applicability.* This subpart applies to all HUD multifamily mortgage insurance and coinsurance programs.

§ 200.121 Requirements and effectiveness.

(a) Multifamily mortgagees, which are required by 24 CFR part 207 to report mortgage delinquencies, defaults, reinstatements, assignment elections, withdrawals of assignment elections, and related information, must submit this information electronically, over the Internet, in accordance with the following schedule of effectiveness:

(1) Mortgagees having 70 or more insured mortgage loans must comply with this section by no later than January 1, 1999;

(2) Mortgagees having from 26 to 69 insured mortgage loans must comply with this section by no later than January 1, 2000;

(3) Mortgagees having from 11 to 25 insured mortgage loans must comply with this section by no later than January 1, 2001;

(4) Mortgagees having 10 or fewer insured mortgage loans must comply with this section by no later than January 1, 2002.

(b) *Exception.* On or after January 1, 2002, mortgagees that hold or service fewer than 10 multifamily mortgages may continue to report mortgage delinquencies, defaults, reinstatements, assignment elections, withdrawals of assignment elections, and related information in writing on Form HUD–92426 only with specific HUD approval. HUD will grant such approval, upon application by the mortgagee, for reasons of hardship due to insufficient financial resources to purchase the required hardware and Internet access.

(c) HUD will not accept reports of information regarding defaults, reinstatements, assignment elections, and related information in a manner that is not in accordance with this section. Failure on the part of mortgagees to report this information as required by 24 CFR part 207 and this section may result in HUD's application of the sanctions and surcharges specified in 24 CFR part 207.

PART 207—MULTIFAMILY HOUSING MORTGAGE INSURANCE

3. The authority citation for 24 CFR part 207 continues to read as follows:

Authority: 12 U.S.C. 1701z–11(e), 1713, and 1715b; 42 U.S.C. 3535(d).

4. Section 207.256 is revised to read as follows:

§ 207.256 Notice.

(a) If the default as defined in § 207.255 is not cured within the 30 days grace period, the mortgagee must, within 30 days thereafter, notify the Commissioner of such default, in the manner prescribed in 24 CFR part 200, subpart B.

(b) Notwithstanding § 207.255(a)(2), the mortgagee must give notice to the Commissioner, in the manner prescribed in 24 CFR part 200, subpart B, of the failure of the mortgagor to comply with such covenant, regardless of the fact the mortgagee may not have elected to accelerate the debt.

5. Section 207.256a is revised to read as follows:

§ 207.256a Reinstatement of defaulted mortgage.

If, after default and prior to the completion of foreclosure proceedings, the mortgagor cures the default, the insurance shall continue as if a default had not occurred, provided the mortgagee gives notice of reinstatement to the Commissioner, in the manner prescribed in 24 CFR part 200, subpart B.

6. Section 207.258 is amended by revising paragraphs (a) and (b)(1), to read as follows:

§ 207.258 Insurance claim requirements.

(a) *Alternative election by mortgagee.* When the mortgagee becomes eligible to receive mortgage insurance benefits pursuant to § 207.255(c), it must, within 45 days thereafter, give the Commissioner notice, in the manner prescribed in 24 CFR part 200, subpart B, of its intention to file an insurance claim and of its election either to assign the mortgage to the Commissioner, as provided in paragraph (b) of this section, or to acquire and convey title to the Commissioner, as provided in paragraph (c) of this section.

(b) * * *

(1) *Notice of assignment.* On the date the assignment of the mortgage is filed for record, the mortgagee must notify the Commissioner, in the manner prescribed in 24 CFR part 200, subpart B, of such assignment, and must also notify the FHA Comptroller by telegram of such recordation.

* * * * *

April 8, 1998.

Dated: May 6, 1998.

Art Agnos,

Acting General Deputy, Assistant Secretary for Housing, Deputy Federal Housing Commissioner.

[FR Doc. 98–12615 Filed 5–12–98; 8:45 am]

BILLING CODE 4210–27–P

federal register

Wednesday
May 13, 1998

Part V

Department of Transportation

Federal Aviation Administration

14 CFR Part 108

Certification of Screening Companies; Proposed Rule

DEPARTMENT OF TRANSPORTATION

Federal Aviation Administration

14 CFR Part 108

[Docket No. 28852; Notice No. 97–3]

RIN 2120–AG31

Certification of Screening Companies

AGENCY: Federal Aviation Administration (FAA). DOT.

ACTION: Advanced notice of proposed rulemaking (ANPRM); withdrawal.

SUMMARY: In early 1997, the FAA sought public comment on issues relating to FAA certification of screening companies and other enhancements to air carrier screening of passengers, property, and baggage. The FAA issued the advance notice in response to a recommendation made by the White House Commission on Aviation Safety and Security, and to a requirement in the Federal Aviation Reauthorization Act of 1996. The Reauthorization Act requires the FAA to certify companies providing security screening and to develop uniform performance standards for providing security screening services. The FAA is currently developing, field testing, and evaluating an automated screener testing system which will provide uniform data regarding screener performance. The FAA plans to propose to require performance standards as an integral part of the certification of screening companies rule, develop and incorporate the specific standards in a security program, and measure subsequent company performance based on the data that this system provides. Therefore, the FAA is withdrawing the ANPRM to allow this automated system to be adequately field tested and evaluated before proceeding with rulemaking.

DATES: This withdrawal is effective May 13, 1998.

FOR FURTHER INFORMATION CONTACT: Ms. Kris Mason, Office of Civil Aviation Security Policy and Planning, ACP–100, Federal Aviation Administration, 800 Independence Avenue, S.W., Washington, DC 20591, telephone (202) 267–8184.

SUPPLEMENTARY INFORMATION:

Background

Following the tragic cash of TWA 800 on July 17, 1996, the President created the White House Commission on Aviation Safety and Security (the Commission). The Commission issued an initial report on September 9, 1996, with 20 specific recommendations for improving security, one of which was the development of uniform performance standards for the selection, training, certification, and recertification of screening companies and their employees.

On October 9, 1996, the President signed the Federal Aviation Reauthorization Act of 1996, Pub. L. 104–264 (the Act). Section 302 provides:

> The Administrator of the Federal Aviation Administration is directed to certify companies providing security screening and to improve the training and testing of security screeners through development of uniform performance standards for providing security screening services.

Discussion of Comments

In response to the Congressional mandate and to the Commission report, the FAA published an ANPRM on March 17, 1997, (62 FR 12724) requesting comments on certification of companies providing security screening. The FAA received 20 comments from the public on the ANPRM, which are briefly summarized below.

While commenters disagreed on several issues, including the level of oversight responsibility air carriers should have over certificated screening companies, commenters generally agreed that national standards for security screening operations are needed. Approximately one-third of the commenters stated that certification of individual screeners would have a greater impact on improving safety than certification of screening companies. Most of these commenters also stated that the certification of individual screeners would improve screener professionalism and performance.

Approximately half of the commenters agreed that air carriers conducting screening operations should be subject to the same standards as certificated screening companies. A majority of commenters stated that the same screening operation requirements that apply to U.S. carriers should apply to foreign carriers providing services in this country. Several commenters disagreed with any proposal by the FAA to regulate joint-use checkpoints and checkpoint operational configurations.

Reason for Withdrawal

While certificating companies providing security screening can result in many important changes to the way that carriers and screening companies conduct screening in the U.S., a critical step in this process is having a reliable and consistent way to measure the screeners' performance. By measuring performance, the FAA can hold certificated screening companies and carriers accountable for safe, effective screening operations. Both the FAA and many commenters to the ANPRM recognize the importance of establishing national performance, training, and testing standards.

The FAA is currently developing, field testing, and evaluating an automated screener testing system call Threat Image Projection (TIP) which is expected to yield uniform data regarding screener performance. When TIP is installed on existing x-ray machines, it tests screeners' detection capabilities by projecting both random images of threats into live bags being screened, and randomly projecting images of bags containing threats onto x-ray screens. Screeners are then responsible for positively identifying the threat image. Once prompted, TIP indicates to the screener whether the threat is real and then records the screener's performance in a database that the FAA can access to analyze performance trends.

TIP is currently being field tested, and its reliability and functional use must be validated prior to general use. The FAA is closely monitoring TIP's capabilities in an operational environment and is making necessary adjustments. The FAA is also beginning to gather and analyze data which it can use to develop screener performance standards and measure subsequent screening company performance. The FAA estimates that this validation period will require another 6–8 months to complete. Because the FAA sees this technology as such an integral part in developing both a program to certificate screening companies, and uniform performance standards, it is delaying rulemaking action until the validation is complete.

Decision

In consideration of the above, Notice No. 97–3, published on March 17, 1997, is hereby withdrawn.

Issued in Washington, DC on May 8, 1998.

Anthony Fainberg,

Director, Office of Civil Aviation Security Policy and Planning.

[FR Doc. 98–12749 Filed 5–11–98; 8:45 am]

BILLING CODE 4910–13–M

federal register

Wednesday
May 13, 1998

Part VI

The President

Executive Order 13082—Joint Mexican-United States Defense Commission

Federal Register
Vol. 63, No. 92
Wednesday, May 13, 1998

Presidential Documents

Title 3—

The President

Executive Order 13082 of May 8, 1998

Joint Mexican-United States Defense Commission

By the authority vested in me as President by the Constitution and the laws of the United States of America, and in order to add a member of the Joint Staff to the Joint-Mexican-United States Defense Commission, it is hereby ordered that the third paragraph of Executive Order 9080 of February 27, 1942, as amended by Executive Order 10692 of December 22, 1956, and by Executive Order 12377 of August 6, 1982, is further amended to read as follows:

''The United States membership of the Commission shall consist of an Army member, a Navy member, an Air Force member, a Marine Corps member, and a Joint Staff member, each of whom shall be designated by the Secretary of Defense and serve during the pleasure of the Secretary. The Secretary shall designate from among the United States members a Chair thereof and may designate alternate United States members of the Commission.''

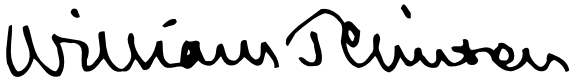

THE WHITE HOUSE,
May 8, 1998.

[FR Doc. 98–12963
Filed 5–12–98; 11:08 am]
Billing code 3195–01–P

Reader Aids

Federal Register

Vol. 63, No. 92

Wednesday, May 13, 1998

CUSTOMER SERVICE AND INFORMATION

Federal Register/Code of Federal Regulations

General Information, indexes and other finding aids	**202–523–5227**
Laws	**523–5227**

Presidential Documents

Executive orders and proclamations	**523–5227**
The United States Government Manual	**523–5227**

Other Services

Electronic and on-line services (voice)	**523–4534**
Privacy Act Compilation	**523–3187**
Public Laws Update Service (numbers, dates, etc.)	**523–6641**
TTY for the deaf-and-hard-of-hearing	**523–5229**

ELECTRONIC RESEARCH

World Wide Web

Full text of the daily Federal Register, CFR and other publications:

http://www.access.gpo.gov/nara

Federal Register information and research tools, including Public Inspection List, indexes, and links to GPO Access:

http://www.nara.gov/fedreg

E-mail

PENS (Public Law Electronic Notification Service) is an E-mail service that delivers information about recently enacted Public Laws. To subscribe, send E-mail to

listproc@lucky.fed.gov

with the text message:

subscribe publaws-l <firstname> <lastname>

Use listproc@lucky.fed.gov only to subscribe or unsubscribe to PENS. We cannot respond to specific inquiries at that address.

Reference questions. Send questions and comments about the Federal Register system to:

info@fedreg.nara.gov

The Federal Register staff cannot interpret specific documents or regulations.

FEDERAL REGISTER PAGES AND DATES, MAY

24097–24382 1
24383–24738 4
24739–24910 5
24911–25152 6
25153–25386 7
25387–25746 8
25747–26062 11
26063–26420 12
26421–26710 13

CFR PARTS AFFECTED DURING MAY

At the end of each month, the Office of the Federal Register publishes separately a List of CFR Sections Affected (LSA), which lists parts and sections affected by documents published since the revision date of each title.

3 CFR

Proclamations:
7088 24383
7089 25145
7090 25147
7091 25149
7092 25151
7093 26415

Executive Orders:
9080 26709
10692 26709
12377 26709
13081 24385
13082 26709

Administrative Orders:

Presidential Determinations:
No. 98–21 of April 28, 1998 26419

5 CFR

351 26421
630 26421
1605 24380

Proposed Rules:
351 26531

7 CFR

301 .....25153, 25747, 25748
979 25387

Proposed Rules:
1 24467
210 .....24686, 25569
220 .....24686, 25569
271 .....24985, 26250
278 .....24985, 26250
279 .....24985, 26250
1710 24995
1714 24995

9 CFR

Proposed Rules:
93 26099
130 24473

10 CFR

11 25156
25 25156
430 25996

12 CFR

Ch. III 25157
Ch. VII 24097
330 25750
703 24103
704 24103
1720 26063

Proposed Rules:
922 26532
931 26532
933 26532
934 26532
941 26532
935 25718
938 25718
970 25718

13 CFR

120 24739

Proposed Rules:
120 24753

14 CFR

11 25572
36 26063
21 26422
27 26422
39 .....24210, 24387, 24389, 24740, 24742, 24911, 24913, 24914, 24915, 25158, 25389, 26063, 26425, 26426, 26427, 26429, 26439
71 .....24389, 24390, 24744, 24745, 26445, 26446, 26447, 26448, 26449, 26450, 26451
91 26684
97 .....25160, 25161
135 25572

Proposed Rules:
39 .....24136, 24138, 24756, 24758, 24760, 24762, 25179, 25180, 25182, 25781, 25787, 26100, 26102, 26104, 26106, 26107, 26109, 26111, 26112
71 .....24140, 24500, 24764, 24995
108 26706

15 CFR

270 24917
911 24917

16 CFR

260 24240

Proposed Rules:
Ch. I 24996

17 CFR

4 24390

Proposed Rules:
1 24142
34 26114
35 26114
423 25417

19 CFR

101 24746
351 24391
354 24391

20 CFR

404 24927
416 24927

21 CFR

3....26690
5....26690
10....26690
16....26690
25....26690
50....26690
56....26690
58....26690
71....26690
165....25764
184....24416
200....26690
201....26690
207....26690
210....26690
211....26690
310....26690
312....26690
314....26690
369....26690
430....26066
431....26066
432....26066
433....26066
436....26066
440....26066
441....26066
442....26066
443....26066
444....26066
446....26066
448....26066
449....26066
450....26066
452....26066
453....26066
455....26066
460....26066
510....24105, 25163
522....24106, 24420
529....24105, 25163
556....24106
558....24420
800....26690
801....24934
803....26069
804....26069
812....26690
1240....26077

Proposed Rules:

3....26694
5....26694
10....26694
16....26694
25....26694
50....26694
56....26694
58....26694
71....26694
101....24253, 24593
120....24253
165....25789
200....26694
201....26694
207....26694
210....26694
211....26694
310....26694
312....26694
314....26694
369....26694
429....26694
430....26127
431....26127
432....26127
433....26127
436....26127
440....26127
441....26127
442....26127
443....26127
444....26127
446....26127
449....26127
450....26127
452....26127
453....26127
455....26127
460....26127
800....26694
812....26694
803....26129
804....26129
874....25794

22 CFR

41....24107

24 CFR

3280....26386

Proposed Rules:

6....26022
180....26022
200....26702
203....24736
207....26702
570....26022
888....24846
3280....26392

26 CFR

Proposed Rules:

1....24765, 25796

28 CFR

2....25769, 25770, 25771
51....24108

29 CFR

4231....24421

Proposed Rules:

1910....24501
2700....25183

30 CFR

202....26362
203....24747
216....26362
250....26362
918....25391
920....26451

Proposed Rules:

218....25187
250....25187
256....25187
934....25428

31 CFR

285....25136

Proposed Rules:

208....26561

32 CFR

323....25772
701....25773
706....24747
2101....25736

33 CFR

100....24109, 24425, 27454
117....24426
165....24109, 24425, 25164
207....24427

Proposed Rules:

100....25187
165....25189

36 CFR

223....24110

37 CFR

260....25394

38 CFR

21....26455

39 CFR

241....25166

40 CFR

51....24429
52....24114, 24115, 24434, 24435, 24748, 24935, 25167, 25415, 25773, 26455, 26460, 26462
60....24436
62....24841
63....24116, 24436, 24749, 26078, 26463
76....24116
80....24117
81....24445, 24748
85....24429
86....24446
148....24596
156....25168
180....24118, 24119, 24450, 24451, 24452, 24936, 24939, 24941, 24949, 24955, 25775, 26082, 26089, 26097, 26466, 26472, 26473, 26481
261....24976, 24963
268....24596
271....24453
279....24963
281....24453
300....25169
302....24596
721....24120

Proposed Rules:

22....25006
51....25902
52....25191, 25796, 26561, 26562, 26564
59....25006
60....24515
63....24515, 24765, 26561
76....25902
96....25092
131....26565
141....25430, 26137
142....25430
258....25430
260....25430
261....25006, 25430, 25796
264....25430
265....25430
266....25430
270....25430
279....25006, 25430

41 CFR

Ch. 301....26488

42 CFR

60....25777
409....26252
410....26252, 26318
411....26252
412....26318
413....26252, 26318
415....26318
422....25360
424....26252
483....26252
485....26318
489....26252

Proposed Rules:

405....25576, 26565
412....25576, 26565
413....25576, 26565

44 CFR

206....24969

Proposed Rules:

206....24143, 25010

45 CFR

1215....26488
2507....26488

Proposed Rules:

142....25272

46 CFR

Proposed Rules:

1....26566
10....26566

47 CFR

0....24121, 25778
1....24121, 24126
43....24120
63....24120
64....24120
68....25170
69....26495, 26497
73....24454, 24970
101....26502

Proposed Rules:

22....26138
61....25811
64....26138
73....24517, 24518
76....24145

48 CFR

970....25779
5243....24129
5252....24129

Proposed Rules:

1....25382
4....25382
12....25382
14....25382
19....25382
26....25382
27....25382
32....25382
41....25382
52....25382
204....25438
208....25438
213....25438
216....25438
217....25438
219....25438
223....25438
225....25438

237.....25438
242.....25438
246.....25438
247.....25438
253.....25438

49 CFR

223.....24630
232.....24130
239.....24630
393.....24454
553.....26508

Proposed Rules:
544.....24519

50 CFR

17.....25177, 26517
600 .....24212, 24970, 26250
648.....25415
660 .....24970, 24973, 26250
679.....24984

Proposed Rules:
217.....24148
300.....24751
600.....24522, 26570
622.....24522
648.....25442

REMINDERS

The items in this list were editorially compiled as an aid to Federal Register users. Inclusion or exclusion from this list has no legal significance.

RULES GOING INTO EFFECT MAY 13, 1998

ENVIRONMENTAL PROTECTION AGENCY

Pesticides; tolerances in food, animal feeds, and raw agricultural commodities:

Bromoxynil; published 5-13-98

Diflubenzuron; published 5-13-98

Pyriproxyfen; published 5-13-98

GENERAL SERVICES ADMINISTRATION

Federal travel:

Per diem localities; maximum lodging and meal allowances; published 5-13-98

INTERIOR DEPARTMENT

Surface Mining Reclamation and Enforcement Office

Permanent program and abandoned mine land reclamation plan submissions:

Maryland; published 5-13-98

TRANSPORTATION DEPARTMENT

Coast Guard

Regattas and marine parades:

River Race Augusta; published 5-13-98

TRANSPORTATION DEPARTMENT

Federal Aviation Administration

Airworthiness directives:

Boeing; published 4-13-98

Organization, functions, and authority delegations:

Unescorted access privilege; fingerprint cards submission for employment investigation checks; address change; published 4-13-98

TRANSPORTATION DEPARTMENT

National Highway Traffic Safety Administration

Rulemaking procedures:

Motor vehicle safety standards; international harmonization activities; published 5-13-98

COMMENTS DUE NEXT WEEK

AGRICULTURE DEPARTMENT

Agricultural Marketing Service

Spearmint oil produced in Far West; comments due by 5-19-98; published 4-29-98

AGRICULTURE DEPARTMENT

Animal and Plant Health Inspection Service

Plant-related quarantine, domestic:

Black stem rust; comments due by 5-22-98; published 4-7-98

AGRICULTURE DEPARTMENT

Grants and cooperative agreements to State and local govenments, university, hospitals, and other non-profit organizations; comments due by 5-18-98; published 2-17-98

COMMERCE DEPARTMENT

National Oceanic and Atmospheric Administration

Fishery conservation and management:

Magnuson-Stevens Act provisions—

Essential fish habitat; comments due by 5-22-98; published 5-13-98

West Coast States and Western Pacific fisheries—

Pacific coast groundfish; comments due by 5-22-98; published 4-22-98

West Coast States and Western Pacific fisheries—

Pacific Coast groundfish; comments due by 5-21-98; published 5-6-98

COMMODITY FUTURES TRADING COMMISSION

Commodity Exchange Act:

Trading hours; approval of changes; comments due by 5-18-98; published 5-1-98

DEFENSE DEPARTMENT

Federal Acquisition Regulation (FAR):

Civil defense costs; comments due by 5-19-98; published 3-20-98

Mandatory Government source inspection; comments due by 5-19-98; published 3-20-98

ENERGY DEPARTMENT

Federal Energy Regulatory Commission

Natural Gas Policy Act:

Interstate natural gas pipelines—

Business practice standards; comments due by 5-22-98; published 4-22-98

ENVIRONMENTAL PROTECTION AGENCY

Air quality implementation plans; approval and promulgation; various States:

Arizona; comments due by 5-18-98; published 4-1-98

Missouri; comments due by 5-22-98; published 4-22-98

Vermont; comments due by 5-22-98; published 4-22-98

Washington; comments due by 5-21-98; published 4-21-98

Air quality planning purposes; designation of areas:

Nebraska; comments due by 5-21-98; published 4-23-98

Drinking water:

National primary drinking water regulations—

Variances and exemptions; revisions; comments due by 5-20-98; published 4-20-98

Pesticides; tolerances in food, animal feeds, and raw agricultural commodities:

Propazine; comments due by 5-18-98; published 3-18-98

FEDERAL COMMUNICATIONS COMMISSION

Common carrier services:

Telecommunications Act of 1996; implementation—

Broadcast ownership and other rules; biennial review; comments due by 5-22-98; published 3-31-98

Radio stations; table of assignments:

Arkansas; comments due by 5-18-98; published 4-10-98

GENERAL SERVICES ADMINISTRATION

Federal Acquisition Regulation (FAR):

Civil defense costs; comments due by 5-19-98; published 3-20-98

Mandatory Government source inspection; comments due by 5-19-98; published 3-20-98

HEALTH AND HUMAN SERVICES DEPARTMENT

Food and Drug Administration

Food for human consumption:

Food labeling—

Nutrient content claims; ''healthy'' definition; comments due by 5-19-98; published 3-18-98

HEALTH AND HUMAN SERVICES DEPARTMENT

Health Care Financing Administration

Medicare:

Medicare integrity program establishment, fiscal intermediary and carrier functions, and conflict of interest requirements; comments due by 5-19-98; published 3-20-98

INTERIOR DEPARTMENT

Land Management Bureau

Range management:

Grazing administration—

Alaska; livestock; comments due by 5-19-98; published 3-20-98

INTERIOR DEPARTMENT

Fish and Wildlife Service

Alaska National Wildlife Refuges:

Kenai National Wildlife Refuge; seasonal closure of Moose Range Meadows public access easements; comments due by 5-18-98; published 3-18-98

Endangered and threatened species:

Gentner's fritillary; comments due by 5-22-98; published 3-23-98

Northern Idaho ground squirrel; comments due by 5-22-98; published 3-23-98

INTERIOR DEPARTMENT

National Park Service

Special regulations:

Appalachian National Scenic Trail, ME et al.; snowmobile routes; comments due by 5-18-98; published 3-19-98

INTERIOR DEPARTMENT

Surface Mining Reclamation and Enforcement Office

Permanent program and abandoned mine land reclamation plan submissions:

Missouri; comments due by 5-22-98; published 4-22-98

JUSTICE DEPARTMENT

Immigration and Naturalization Service

Immigration:

Benefits applicants and petitioners fingerprinting fees and requirements for

conducting criminal background checks before final naturalization adjudication; comments due by 5-18-98; published 3-17-98

NATIONAL AERONAUTICS AND SPACE ADMINISTRATION

Federal Acquisition Regulation (FAR):

Civil defense costs; comments due by 5-19-98; published 3-20-98

Mandatory Government source inspection; comments due by 5-19-98; published 3-20-98

NATIONAL CREDIT UNION ADMINISTRATION

Credit unions:

Federal credit unions acting as trustees and custodians of pension and retirement plans; comments due by 5-20-98; published 3-24-98

STATE DEPARTMENT

Visas; nonimmigrant documentation:

New applications from aliens whose prior applications were refused; nonacceptance-for-six-months policy; comments due by 5-18-98; published 3-17-98

TRANSPORTATION DEPARTMENT

Coast Guard

Regattas and marine parades:

Parker International Waterski Marathon; comments due by 5-18-98; published 4-2-98

TRANSPORTATION DEPARTMENT

Federal Aviation Administration

Airworthiness directives:

Airbus; comments due by 5-20-98; published 4-20-98

Boeing; comments due by 5-18-98; published 4-3-98

British Aerospace; comments due by 5-21-98; published 4-21-98

Dassault; comments due by 5-20-98; published 4-20-98

Dornier; comments due by 5-21-98; published 4-21-98

Empresa Brasileira de Aeronautica S.A.; comments due by 5-21-98; published 4-21-98

Empresa Brasileira de Aeronautica, S.A; comments due by 5-21-98; published 4-21-98

Eurocopter France; comments due by 5-19-98; published 3-20-98

Maule Aerospace Technology Corp.; comments due by 5-22-98; published 3-24-98

McDonnell Douglas; comments due by 5-18-98; published 4-2-98

Saab; comments due by 5-21-98; published 4-21-98

Airworthiness standards:

Transport category airplanes—

Cargo or baggage compartments; fire safety standards; comments due by 5-18-98; published 2-17-98

Class E airspace; comments due by 5-18-98; published 3-30-98

TRANSPORTATION DEPARTMENT

National Highway Traffic Safety Administration

Motor vehicle safety standards:

Side impact protection—

Side impact test dummy specifications; lumbar spine inserts-spacers and ribcage damper pistons; comments due by 5-18-98; published 4-2-98

TREASURY DEPARTMENT

Alcohol, Tobacco and Firearms Bureau

Alcohol, tobacco, and other excise taxes:

Brady Handgun Violence Prevention Act; implementation—

National instant criminal background check system; firearms dealer, importer, and manufacturer requirements; comments due by 5-20-98; published 2-19-98

Alcohol; viticultural area designations:

Chiles Valley, CA; comments due by 5-19-98; published 3-20-98

TREASURY DEPARTMENT

Customs Service

Organization and functions; field organization, ports of entry, etc.:

Fort Myers, FL; comments due by 5-18-98; published 3-17-98

TREASURY DEPARTMENT

Fiscal Service

Financial management services:

Debt Collection Imrovement Act of 1996—

Barring delinquent debtors from obtaining Federal loans or loan insurance or guarantees; comments due by 5-22-98; published 4-22-98

LIST OF PUBLIC LAWS

This is a continuing list of public bills from the current session of Congress which have become Federal laws. It may be used in conjunction with ''P L U S'' (Public Laws Update Service) on 202–523–6641. This list is also available online at http://www.nara.gov/fedreg.

The text of laws is not published in the **Federal Register** but may be ordered in ''slip law'' (individual pamphlet) form from the Superintendent of Documents, U.S. Government Printing Office, Washington, DC 20402 (phone, 202–512–1808). The text will also be made available on the Internet from GPO Access at http://www.access.gpo.gov/su_docs/. Some laws may not yet be available.

H.R. 3579/P.L. 105–174

1998 Supplemental Appropriations and Rescissions Act (May 1, 1998; 112 Stat. 58)

Last List April 29, 1998

Public Laws Electronic Notification Service (PENS)

PENS is a free electronic mail notification service of newly enacted public laws. To subscribe, send E-mail to **listproc@lucky.fed.gov** with the text message: **subscribe PUBLAWS-L** Your Name

Note: This service is strictly for E-mail notification of new public laws. The text of laws is not available through this service. **PENS** cannot respond to specific inquiries sent to this address.