4–15–98
Vol. 63 No. 72
Pages 18307–18816

federal register

Wednesday
April 15, 1998

Now Available Online via

GPO Access

Free online access to the official editions of the *Federal Register, the Code of Federal Regulations* and other Federal Register publications is available on *GPO Access*, a service of the U.S. Government Printing Office at:

http://www.access.gpo.gov/nara/index.html

For additional information on ***GPO Access*** products, services and access methods, see page II or contact the *GPO Access* User Support Team via:

- ★ Phone: toll-free: 1-888-293-6498
- ★ Email: gpoaccess@gpo.gov

The **FEDERAL REGISTER** is published daily, Monday through Friday, except official holidays, by the Office of the Federal Register, National Archives and Records Administration, Washington, DC 20408, under the Federal Register Act (44 U.S.C. Ch. 15) and the regulations of the Administrative Committee of the Federal Register (1 CFR Ch. I). The Superintendent of Documents, U.S. Government Printing Office, Washington, DC 20402 is the exclusive distributor of the official edition.

The **Federal Register** provides a uniform system for making available to the public regulations and legal notices issued by Federal agencies. These include Presidential proclamations and Executive Orders, Federal agency documents having general applicability and legal effect, documents required to be published by act of Congress, and other Federal agency documents of public interest.

Documents are on file for public inspection in the Office of the Federal Register the day before they are published, unless the issuing agency requests earlier filing. For a list of documents currently on file for public inspection, see http://www.nara.gov/fedreg.

The seal of the National Archives and Records Administration authenticates the Federal Register as the official serial publication established under the Federal Register Act. Under 44 U.S.C. 1507, the contents of the **Federal Register** shall be judicially noticed.

The **Federal Register** is published in paper and on 24x microfiche. It is also available online at no charge as one of the databases on GPO Access, a service of the U.S. Government Printing Office.

The online edition of the **Federal Register** is issued under the authority of the Administrative Committee of the Federal Register as the official legal equivalent of the paper and microfiche editions (44 U.S.C. 4101 and 1 CFR 5.10). It is updated by 6 a.m. each day the **Federal Register** is published and it includes both text and graphics from Volume 59, Number 1 (January 2, 1994) forward.

GPO Access users can choose to retrieve online **Federal Register** documents as TEXT (ASCII text, graphics omitted), PDF (Adobe Portable Document Format, including full text and all graphics), or SUMMARY (abbreviated text) files. Users should carefully check retrieved material to ensure that documents were properly downloaded.

On the World Wide Web, connect to the **Federal Register** at http://www.access.gpo.gov/nara. Those without World Wide Web access can also connect with a local WAIS client, by Telnet to swais.access.gpo.gov, or by dialing (202) 512-1661 with a computer and modem. When using Telnet or modem, type swais, then log in as guest with no password.

For more information about GPO Access, contact the GPO Access User Support Team by E-mail at gpoaccess@gpo.gov; by fax at (202) 512–1262; or call (202) 512–1530 or 1–888–293–6498 (toll free) between 7 a.m. and 5 p.m. Eastern time, Monday–Friday, except Federal holidays.

The annual subscription price for the **Federal Register** paper edition is $555, or $607 for a combined **Federal Register,** Federal Register Index and List of CFR Sections Affected (LSA) subscription; the microfiche edition of the **Federal Register** including the Federal Register Index and LSA is $220. Six month subscriptions are available for one-half the annual rate. The charge for individual copies in paper form is $8.00 for each issue, or $8.00 for each group of pages as actually bound; or $1.50 for each issue in microfiche form. All prices include regular domestic postage and handling. International customers please add 25% for foreign handling. Remit check or money order, made payable to the Superintendent of Documents, or charge to your GPO Deposit Account, VISA, MasterCard or Discover. Mail to: New Orders, Superintendent of Documents, P.O. Box 371954, Pittsburgh, PA 15250–7954.

There are no restrictions on the republication of material appearing in the **Federal Register.**

How To Cite This Publication: Use the volume number and the page number. Example: 63 FR 12345.

SUBSCRIPTIONS AND COPIES

PUBLIC	
Subscriptions:	
Paper or fiche	**202–512–1800**
Assistance with public subscriptions	**512–1806**
General online information	**202–512–1530; 1–888–293–6498**
Single copies/back copies:	
Paper or fiche	**512–1800**
Assistance with public single copies	**512–1803**
FEDERAL AGENCIES	
Subscriptions:	
Paper or fiche	**523–5243**
Assistance with Federal agency subscriptions	**523–5243**

Printed on recycled paper containing 100% post consumer waste

Contents

Federal Register

Vol. 63, No. 72

Wednesday, April 15, 1998

Agriculture Department
See Grain Inspection, Packers and Stockyards Administration
See Rural Utilities Service

Census Bureau
PROPOSED RULES
Foreign trade statistics:
Foreign military sales shipments; value reporting requirement, 18344–18345

Centers for Disease Control and Prevention
NOTICES
Committees; establishment, renewal, termination, etc.:
Immunization Practices Advisory Committee, 18427
Grants and cooperative agreements; availability, etc.:
Human immunodeficiency virus (HIV), sexually transmitted diseases (STDs), and tuberculosis (TB); control and prevention, 18427–18430
Meetings:
National Center for Infectious Diseases Scientific Counselors Board, 18430

Children and Families Administration
NOTICES
Grants and cooperative agreements; availability, etc.:
Head Start program—
Training partnerships with historically black colleges and universities, 18430–18431

Coast Guard
RULES
Drawbridge operations:
Maine, 18319–18323
Massachusetts, 18322–18323
New York, 18320–18322
PROPOSED RULES
Drawbridge operations:
Louisiana, 18350–18351
Private navigation aids:
Wisconsin and Alabama, 18349–18350

Commerce Department
See Census Bureau
See Foreign-Trade Zones Board
See International Trade Administration
See National Oceanic and Atmospheric Administration

Committee for the Implementation of Textile Agreements
NOTICES
Cotton, wool, and man-made textiles:
Dominican Republic, 18378–18379

Corporation for National and Community Service
NOTICES
Grants and cooperative agreements; availability, etc.:
AmeriCorps* programs—
North Dakota and South Dakota, 18379
Foster grandparent projects, 18379–18381
Retired and senior volunteer program projects, 18381–18383
Senior companion projects, 18383–18385

Defense Department
See Navy Department
NOTICES
Agency information collection activities:
Proposed collection; comment request, 18385

Delaware River Basin Commission
NOTICES
Hearings, 18388–18389

Drug Enforcement Administration
NOTICES
Applications, hearings, determinations, etc.:
Cash Drug Store; correction, 18501

Education Department
NOTICES
Grants and cooperative agreements; availability, etc.:
Incarcerated youth offenders program; workplace and community transition training, 18389–18390
Special education and rehabilitative services—
Dissemination and utilization project and rehabilitation research and training center, 18390–18391

Employment and Training Administration
NOTICES
Grants and cooperative agreements; availability, etc.:
Welfare-to-work program, 18445–18458
Meetings:
Indian and Native American Employment and Training Council, 18458

Energy Department
See Energy Efficiency and Renewable Energy Office
See Federal Energy Regulatory Commission
NOTICES
Floodplain and wetlands protection; environmental review determinations; availability, etc.:
Savannah River Site, SC; wetland mitigation bank program, 18391–18392
Grants and cooperative agreements; availability, etc.:
Inventions and innovation program, 18392–18393

Energy Efficiency and Renewable Energy Office
NOTICES
Meetings:
Appliance Energy Efficiency Standards Advisory Committee, 18393

Environmental Protection Agency
RULES
Air and water programs:
Pulp, paper, and paperboard industries; effluent limitations guidelines, pretreatment standards, and new source performance standards, 18504–18751
Antarctica; environmental impact assessment of nongovernmental activities, 18323–18326
Pesticides; tolerances in food, animal feeds, and raw agricultural commodities:
Canola oil, 18326–18329
Spinosad, 18329–18338

PROPOSED RULES
Air pollutants, hazardous; national emission standards:
Pulp and paper production; standards for chemical recovery combustion sources at kraft, soda, sulfite, and stand-alone semichemical pulp mills, 18754–18793
Antarctica; environmental impact assessment of nongovernmental activities, 18352–18354
Hazardous waste:
Identification and listing—
Exclusions, 18354–18361
Water pollution; effluent guidelines for point source categories:
Pulp, paper, and paperboard; bleached papergrade kraft and soda, 18796–18802
Water pollution control:
Water quality standards—
Polychlorinated biphenyls (PCBs); priority toxic pollutants numeric criteria; States' compliance; correction, 18501
NOTICES
Agency information collection activities:
Proposed collection; comment request, 18399–18401
Submission for OMB review; comment request, 18402–18403
Air pollution control; new motor vehicles and engines:
California pollution control standards; Federal preemption waiver; public hearing; correction, 18403–18406
Committees; establishment, renewal, termination, etc.:
FIFRA Scientific Advisory Panel, 18408–18409
Hazardous waste:
Land disposal restrictions; exemptions—
DuPont Sabine River Works Facility, 18406–18408
Meetings:
Environmental Financial Advisory Board, 18408
Local Government Advisory Committee, 18409
Pesticide, food, and feed additive petitions:
Interregional Research Project, 18411–18420
Pesticide registration, cancellation, etc.:
Agrevo USA Co. et al., 18409–18410
Agrium U.S. Inc. et al.; correction, 18410
Pesticides; emergency exemptions, etc.:
Carfentrazone ethyl, 18420–18421
Water pollution control:
Clean Water Act—
Class I administrative penalty assessments, 18406

Executive Office of the President
See Presidential Documents

Federal Aviation Administration
RULES
Airworthiness directives:
Boeing, 18307–18308
New Piper Aircraft, Inc., 18308–18311
Class E airspace, 18312–18313, 18311–18312
Gulf of Mexico high offshore airspace area, 18313–18314
PROPOSED RULES
Airworthiness directives:
Boeing, 18341–18342
Fokker, 18342–18344
NOTICES
Meetings:
RTCA, Inc., 18485–18486
Passenger facility charges; applications, etc.:
Elko Municipal Airport, NV, 18486
Pangborn Memorial Airport, WA, 18486–18487
San Jose International Airport, CA, 18487

Federal Communications Commission
NOTICES
Agency information collection activities:
Proposed collection; comment request, 18421–18422
Common carrier services:
Toll free service access codes; vanity numbers, 18422–18423

Federal Energy Regulatory Commission
NOTICES
Environmental statements; availability, etc.:
International Paper Co. et al., 18398
Minnesota Power & Light Co., 18398
Hydroelectric applications, 18398–18399
Applications, hearings, determinations, etc.:
Cove Point LNG L.P., 18394
Gas Transport, Inc., 18394
MIGC, Inc., 18394
NorAm Gas Transmission Co., 18394–18395
OkTex Pipeline Co., 18395
Overthrust Pipeline Company, 18395
Questar Pipeline Co., 18395–18396
San Diego Gas & Electric Co. et al., 18396
Texas Gas Transmission Corp., 18396
Transcontinental Gas Pipe Line Corp., 18396
Williams Gas Pipelines Central, Inc., 18397–18398
Williston Basin Interstate Pipeline Co., 18398

Federal Maritime Commission
NOTICES
Agreements filed, etc., 18423
Freight forwarder licenses:
Abaco International Shippers, Inc., et al., 18423–18425

Federal Reserve System
NOTICES
Banks and bank holding companies:
Change in bank control, 18425–18426
Formations, acquisitions, and mergers, 18426
Permissible nonbanking activities, 18426
Federal Open Market Committee:
Domestic policy directives, 19426–18427
Meetings; Sunshine Act, 18427

Fish and Wildlife Service
NOTICES
Environmental statements; availability, etc.:
Incidental take permits—
Travis County, TX; golden-cheeked warbler, 18438

Food and Drug Administration
RULES
Organization, functions, and authority delegations:
Headquarters and field offices; current organizational structure and addresses, 18314–18317
NOTICES
Human drugs:
Patent extension; regulatory review period determinations—
ZAGAM, 18431
Meetings:
Pulmonary-Allergy Drugs Advisory Committee, 18431–18432

Foreign-Trade Zones Board
NOTICES
Applications, hearings, determinations, etc.:
Florida
Komatsu Latin-America Corp.; construction and mining equipment parts distribution facility, 18363–18364
Ohio, 18364

Grain Inspection, Packers and Stockyards Administration
NOTICES
Stockyards; posting and deposting:
St. James Horse Sales Co., MO, et al., 18362

Health and Human Services Department
See Centers for Disease Control and Prevention
See Children and Families Administration
See Food and Drug Administration
See National Institutes of Health
See Public Health Service
See Substance Abuse and Mental Health Services Administration

Housing and Urban Development Department
NOTICES
Agency information collection activities:
Submission for OMB review; comment request, 18436–18437
Empowerment zones; designation, 18437
Grants and cooperative agreements; availability, etc.:
Indian housing block grant program, 18804–18807
Reporting and recordkeeping requirements, 18437–18438

Interior Department
See Fish and Wildlife Service
See Land Management Bureau
See Minerals Management Service
See National Park Service
See Reclamation Bureau
RULES
Supplemental standards of ethical conduct for Department employees; correction, 18501

Internal Revenue Service
NOTICES
Agency information collection activities:
Proposed collection; comment request, 18492–18500

International Trade Administration
NOTICES
Antidumping:
Circular welded non-alloy steel pipe from—
Mexico, 18364
Pasta from—
Italy, 18364–18366
Committees; establishment, renewal, termination, etc.:
U.S.-Korea Committee on Business Cooperation, 18367
Countervailing duties:
Hot-rolled lead and bismuth carbon steel products from—
United Kingdom, 18367–18375

International Trade Commission
NOTICES
Import investigations:
Hardware logic emulation systems and components, 18442–18443
Static random access memory semiconductors from—
Korea et al., 18443–18444

Justice Department
See Drug Enforcement Administration
See Victims of Crime Office
NOTICES
Pollution control; consent judgments:
J&L Specialty Steel, Inc., 18444

Labor Department
See Employment and Training Administration
See Pension and Welfare Benefits Administration

Land Management Bureau
RULES
Range management:
Wild horse and burro adoptions; power of attorney use disallowed, 18338–18340
NOTICES
Environmental statements; availability, etc.:
Mosquito Creek Lake project, OH, 18438–18439
Realty actions; sales, leases, etc.:
Wyoming, 18439

Maritime Administration
NOTICES
Applications, hearings, determinations, etc.:
Lykes Bros. Steamship Co., Inc., 18487–18488

Minerals Management Service
NOTICES
Agency information collection activities:
Proposed collection; comment request, 18439–18440

National Highway Traffic Safety Administration
NOTICES
Agency information collection activities:
Proposed collection; comment request, 18488–18489
Motor vehicle safety standards:
Nonconforming vehicles—
Importation eligibility; determinations, 18489–18492

National Institutes of Health
NOTICES
Meetings:
AIDS Research Office Advisory Council, 18432
National Cancer Institute, 18432–18433
National Eye Institute, 18433
National Institute of Mental Health, 18434–18435
National Institute of Neurological Disorders and Stroke, 18433–18434
National Institute on Aging, 18434
National Institute on Alcohol Abuse and Alcoholism, 18432
National Institute on Drug Abuse, 18434

National Oceanic and Atmospheric Administration
NOTICES
Agency information collection activities:
Proposed collection; comment request, 18375–18377
Permits:
Marine mammals, 18377–18378

National Park Service
NOTICES
Meetings:
National Park System Advisory Board, 18440–18441
Native American Graves Protection and Repatriation Review Committee, 18441

National Transportation Safety Board
NOTICES
Meetings; Sunshine Act, 18458

Navy Department
NOTICES
Inventions, Government-owned; availability for licensing, 18385–18388
Meetings:
Naval Research Advisory Committee, 18388

Nuclear Regulatory Commission
NOTICES
Environmental statements; availability, etc.:
Saxton Nuclear Experimental Corp. et al., 18459–18460
Meetings:
Nuclear Waste Advisory Committee, 18460
Reactor Safeguards Advisory Committee, 18461–18462
Applications, hearings, determinations, etc.:
Ben-Haim, Aharon, M.D., 18458
Elamir, Magdy, M.D., 18458–18459
Hydro Resources, Inc., 18459
Illinois Power Co., 18459
Pacific Gas & Electric Co., 18460–18461

Pension and Welfare Benefits Administration
PROPOSED RULES
Employee Retirement Income Security Act:
Employee benefit plans established or maintained pursuant to collective bargaining agreements; negotiated rulemaking advisory committee; intent to establish, 18345–18349

Pension Benefit Guaranty Corporation
RULES
Single-employer plans:
Allocation of assets—
Interest assumptions for valuing benefits, 18317–18319
NOTICES
Single-employer and multiemployer plans:
Interest rates and assumptions, 18462–18463

Presidential Documents
PROCLAMATIONS
Special observances:
Pan American Day and Pan American Week (Proc. 7081), 18811
ADMINISTRATIVE ORDERS
Korean Peninsula Energy Development Organization; U.S. contribution (Presidential Determination No. 98-20 of April 3, 1998), 18815

Public Health Service
See Centers for Disease Control and Prevention
See Food and Drug Administration
See National Institutes of Health
See Substance Abuse and Mental Health Services Administration
NOTICES
National toxicology program:
Carcinogens Report, Ninth Edition—
Substances, mixtures and exposure circumstances for listing or delisting, 18435

Reclamation Bureau
NOTICES
Environmental statements; availability, etc.:
Tucson aqueduct system reliability investigation project, AZ, 18441–18442

Rural Utilities Service
RULES
General information, organization and functions, and loan making authority
Correction, 18307
NOTICES
Electric and telecommunications borrowers; information dissemination; agency policies, 18362–18363

Securities and Exchange Commission
NOTICES
Meetings:
Securities laws uniformity; annual conference, 18470–18477
Self-regulatory organizations; proposed rule changes:
New York Stock Exchange, Inc., 18481–18483
New York Stock Exchange, Inc., et al., 18477–18481
Applications, hearings, determinations, etc.:
DG Investor Series et al., 18464–18465
Reich & Tang Distributors, Inc., et al., 18465–18468
Sanford C. Bernstein Fund, Inc., et al., 18468–18470

Small Business Administration
NOTICES
Disaster loan areas:
Florida, 18483
Georgia, 18483
Massachusetts et al., 18483
Michigan, 18483
Minnesota, 18483–18484
North Carolina, 18484

Social Security Administration
NOTICES
Privacy Act:
Computer matching programs, 18484–18485

Substance Abuse and Mental Health Services Administration
NOTICES
Agency information collection activities:
Proposed collection; comment request, 18435–18436

Textile Agreements Implementation Committee
See Committee for the Implementation of Textile Agreements

Transportation Department
See Coast Guard
See Federal Aviation Administration
See Maritime Administration
See National Highway Traffic Safety Administration
NOTICES
Agency information collection activities:
Submission for OMB review; comment request, 18485

Treasury Department
See Internal Revenue Service

Victims of Crime Office
NOTICES
Agency information collection activities:
Proposed collection; comment request, 18444–18445

Separate Parts In This Issue

Part II
Environmental Protection Agency, 18504–18751

Part III
Environmental Protection Agency, 18754–18793

Part IV
Environmental Protection Agency, 18796–18802

Part V
Department of Housing and Urban Development, 18804–18807

Part VI
The President, 18811

Part VII
The President, 18815

Reader Aids
Consult the Reader Aids section at the end of this issue for phone numbers, online resources, finding aids, reminders, and notice of recently enacted public laws.

CFR PARTS AFFECTED IN THIS ISSUE

A cumulative list of the parts affected this month can be found in the Reader Aids section at the end of this issue.

3 CFR

Proclamations:

7081 18811

Administrative Orders:

Presidential Determinations:

No. 98–20 of April 3, 1998 18815

5 CFR

Ch. XXV 18501

7 CFR

1700 18307

14 CFR

39 (2 documents) 18307, 18308

71 (3 documents) 18311, 18312, 18313

Proposed Rules:

39 (2 documents) 18341, 18342

15 CFR

Proposed Rules:

30 18344

21 CFR

5 18314

29 CFR

4044 18317

Proposed Rules:

2510 18345

33 CFR

117 (6 documents) 18319, 18320, 18321, 18322, 18323

Proposed Rules:

66 18349

117 18350

40 CFR

8 18323

63 18754

180 (2 documents) 18326, 18329

261 18504

430 18504

Proposed Rules:

8 18352

63 18754

131 18501

261 18354

430 18796

43 CFR

4700 18338

Rules and Regulations

Federal Register
Vol. 63, No. 72
Wednesday, April 15, 1998

This section of the FEDERAL REGISTER contains regulatory documents having general applicability and legal effect, most of which are keyed to and codified in the Code of Federal Regulations, which is published under 50 titles pursuant to 44 U.S.C. 1510.

The Code of Federal Regulations is sold by the Superintendent of Documents. Prices of new books are listed in the first FEDERAL REGISTER issue of each week.

DEPARTMENT OF AGRICULTURE

Rural Utilities Service

7 CFR Part 1700

General Information, Organization and Functions, and Loan Making Authority; Correction

AGENCY: Rural Utilities Service, USDA.

ACTION: Correcting amendments.

SUMMARY: This document contains corrections to the final rule which was published Thursday, April 2, 1998 (63 FR 16085). The rule related to internal agency management; primarily, agency functions and responsibilities and delegations of authority.

DATES: April 15, 1998.

FOR FURTHER INFORMATION CONTACT: F. Lamont Heppe, Jr., Director, Program Development and Regulatory Analysis, Rural Utilities Service, 1400 Independence Avenue, SW., STOP 1522, Room 4034, South Building, Washington, DC 20250–1522. Telephone: (202) 720–0736. Fax: (202) 720–4120. E-mail: fheppe@rus.usda.gov.

SUPPLEMENTARY INFORMATION:

Background

The final rule that is the subject of these corrections affects the internal management of the RUS telecommunications program. This rule reflected the recently approved reorganization of the RUS telecommunications program. The intended effect of this action was to provide efficient utilization of program personnel resources. The new organizational structure will be put into place in the near future. To better guide and assist the public, RUS is amending the rule to reflect the current rather than the newly approved organizational structure. Following the establishment of the new telecommunications program organizational units, the public will be advised accordingly.

Need for Correction

As published, the final rule contains information that may be misleading and is in need of modification.

Correction of Publication

Accordingly, the publication on April 2, 1998, of the final rule, which was the subject of FR Doc. 98–8588, is corrected as follows:

§ 1700.28 [Corrected]

Paragraph 1. On page 16086, in the third column, in § 1700.28, paragraph (b), in the first sentence after the heading, the word ''Three'' and the parenthetical phrase and commas ',(Eastern, Northwest, and Southwest Areas),'' are removed, and the first sentence is corrected to begin with the word ''Area''.

Paragraph 2. On page 16086, in the third column, in § 1700.28, paragraph (c), the heading is corrected to read ''Staff offices'', and paragraph (c) is corrected by adding to the end of the paragraph the following sentence: ''The Advanced Telecommunications Services office prepares analyses of loan making activities and the business and regulatory environment of RUS borrowers and recommends policies and procedures.''

§ 1700.30 [Corrected]

Paragraph 1. On page 16087, in the first column, in § 1700.30, paragraph (b), the first sentence after the heading is corrected by removing the word ''three''.

Dated: April 10, 1998.

Christopher A. McLean,

Acting Administrator, Rural Utilities Service.

[FR Doc. 98–10030 Filed 4–14–98; 8:45 am]

BILLING CODE 3410–15–P

DEPARTMENT OF TRANSPORTATION

Federal Aviation Administration

14 CFR Part 39

[Docket No. 97–NM–267–AD; Amendment 39–10284; AD 98–02–02]

RIN 2120–AA64

Airworthiness Directives; Boeing Model 747 Series Airplanes Equipped With Pratt & Whitney JT9D–3 and –7 Series Engines

AGENCY: Federal Aviation Administration, DOT.

ACTION: Final rule; correction.

SUMMARY: This document corrects erroneous references that appeared in airworthiness directive (AD) 98–02–02 that was published in the **Federal Register** on January 16, 1998 (63 FR 2593). The erroneous references resulted in incorrect citations of AD numbers. That AD is applicable to certain Boeing Model 747 series airplanes. It supersedes an existing AD to continue to require repetitive inspections for discrepancies of the forward engine mount bulkhead of the nacelle strut, and corrective actions, if necessary. That AD also continues to provide for an optional terminating action for the repetitive inspections. For certain airplanes, the AD adds various inspections to detect discrepancies in the forward engine mount bulkhead and chord, and in the forward lower spar web, and corrective actions, if necessary. The AD also adds an additional optional terminating action for the repetitive inspections.

DATES: Effective February 2, 1998.

The incorporation by reference of certain publications listed in the regulations was previously approved by the Director of the Federal Register as of February 2, 1998 (63 FR 2593, January 16, 1998).

FOR FURTHER INFORMATION CONTACT: Tamara L. Anderson, Aerospace Engineer, Airframe Branch, ANM–120S, FAA, Transport Airplane Directorate, Seattle Aircraft Certification Office, 1601 Lind Avenue, SW., Renton, Washington 98055–4056; telephone (425) 227–2771; fax (425) 227–1181.

SUPPLEMENTARY INFORMATION: Airworthiness Directive (AD) 98–02–02, amendment 39–10284, applicable to certain Boeing Model 747 series airplanes, was published in the **Federal**

Register on January 16, 1998 (63 FR 2593). That AD supersedes AD 82–22–02, amendment 39–4476 (47 FR 46842, October 21, 1982), to continue to require repetitive inspections for discrepancies of the forward engine mount bulkhead of the nacelle strut, and corrective action, if necessary. That AD also continues to provide for an optional terminating action for the repetitive inspections. For certain airplanes, that AD adds various repetitive inspections to detect discrepancies (i.e., cracks, damage, loose fasteners) in the forward engine mount bulkhead and in the forward lower spar web, and corrective actions, if necessary. For other airplanes, that AD adds a one-time inspection to detect stop drilled cracks of the exterior of the forward engine mount chord, and replacement of the chord with a new chord, if necessary. That AD also adds an additional optional terminating action for the repetitive inspections.

As published, AD 98–02–02 contained two erroneous references to previously issued AD's, one in paragraph (a) of the AD and the other in paragraph (b). Paragraph (a) of that AD identified the affected airplanes as, ''For airplanes on which the terminating action specified in AD 80–03–09 * * *.'' However, the correct AD number should have been specified as 80–03–09 R1. Paragraph (b) of that AD identified the affected airplanes as, ''For airplanes on which only loose fasteners have been replaced as required by telegraphic AD T79–NW–21, amendment 39–3687.'' Paragraph (b) is a restatement of a NOTE specified in AD 82–22–02. The NOTE did not reference ''amendment 39–3687,'' therefore, paragraph (b) should not reference it either.

Since no other part of the regulatory information has been changed, the final rule is not being republished.

The effective of this AD remains February 2, 1998.

§ 39.13 [Corrected]

On page 2595, in the first column, paragraph (a) of AD 98–02–02 is corrected to read as follows:

* * * * *

(a) For airplanes on which the terminating action specified in AD 80–03–09 R1, amendment 39–3832, has been accomplished: Within 300 hours time-in-service after October 27, 1982 (the effective date of 82–22–02, amendment 39–4476), accomplish paragraphs (a)(1), (a)(2), and (a)(3) of this AD. Repeat the inspections thereafter at intervals not to exceed 4,000 flight hours, until accomplishment of the inspections required by paragraphs (c)(1) and (c)(2) of this AD or the terminating action specified in paragraph (e) of this AD.

* * * * *

On page 2595, in the second column, paragraph (b) of AD 98–02–02 is corrected to read as follows:

* * * * *

(b) For airplanes on which only loose fasteners have been replaced as required by telegraphic AD T79–NW–21: Within 600 hours time-in-service after October 27, 1982, replace all fasteners in both rows of fasteners with new fasteners in accordance with one of the service bulletins listed below:

- Boeing Alert Service Bulletin 747–54A2069, Revision 2, dated February 1, 1980;
- Boeing Alert Service Bulletin 747–54A2069, Revision 3, dated May 23, 1980;
- Boeing Alert Service Bulletin 747–54A2069, Revision 4, dated November 26, 1980;
- Boeing Service Bulletin 747–54A2069, Revision 5, dated August 21, 1981;
- Boeing Alert Service Bulletin 747–54A2069, Revision 6, dated October 22, 1982;
- Boeing Service Bulletin 747–54A2069, Revision 7, dated July 28, 1988;
- Boeing Service Bulletin 747–54A2069, Revision 8, dated June 9, 1994; or
- Boeing Alert Service Bulletin 747–54A2069, Revision 9, dated May 29, 1997.

* * * * *

Issued in Renton, Washington, on April 8, 1998.

Darrell M. Pederson,

Acting Manager,

Transport Airplane Directorate,

Aircraft Certification Service.

[FR Doc. 98–9876 Filed 4–14–98; 8:45 am]

BILLING CODE 4910–13–U

DEPARTMENT OF TRANSPORTATION

Federal Aviation Administration

14 CFR Part 39

[Docket No. 90–CE–65–AD; Amendment 39–10467; AD 98–08–18]

RIN 2120–AA64

Airworthiness Directives; The New Piper Aircraft, Inc. Models PA–31, PA–31–300, PA–31–325, PA–31–350, and PA–31P Airplanes

AGENCY: Federal Aviation Administration, DOT.

ACTION: Final rule.

SUMMARY: This amendment supersedes Airworthiness Directive (AD) 79–01–04, which currently requires repetitively inspecting the elevator bungee spring for cracks or surface deformities on certain Piper Aircraft Corporation (known currently as The New Piper Aircraft, Inc.) Model PA–31–350 airplanes, and replacing any elevator bungee spring with cracks or surface deformities. This AD retains the repetitive inspection and replacement requirements from AD 79–01–04 on The New Piper Aircraft, Inc. (Piper) Model PA–31–350 airplanes until an elevator bungee spring of improved design is installed, and requires these repetitive inspection and replacement requirements on certain other Piper PA–31 and PA–31P series airplanes not affected by AD 79–01–04. This AD also requires replacing the elevator bungee link with a link of improved design on all affected airplanes except for the Piper Model PA–31P airplanes, and repetitively replacing the elevator bungee spring on all affected airplanes. This AD results from reports of cracked elevator bungee springs on airplanes incorporating the older design elevator bungee spring that are not affected by AD 79–01–04, and by reports of cracked elevator bungee springs on airplanes that have improved design elevator bungee springs installed. The actions specified by this AD are intended to prevent failure of the elevator bungee spring, which could result in a reduction in elevator control and consequent loss of control of the airplane.

DATES: Effective May 26, 1998.

The incorporation by reference of certain publications listed in the regulations is approved by the Director of the Federal Register as of May 26, 1998.

ADDRESSES: Service information that applies to this AD may be obtained from The New Piper Aircraft, Inc., Customer Services, 2926 Piper Drive, Vero Beach, Florida 32960. This information may also be examined at the Federal Aviation Administration (FAA), Central Region, Office of the Regional Counsel, Attention: Rules Docket 90–CE–65–AD, Room 1558, 601 E. 12th Street, Kansas City, Missouri 64106; or at the Office of the Federal Register, 800 North Capitol Street, NW, suite 700, Washington, DC.

FOR FURTHER INFORMATION CONTACT: William Herderich, Aerospace Engineer, Atlanta Certification Office, FAA, One Crown Center, 1895 Phoenix Boulevard, suite 450, Atlanta, Georgia 30349; telephone: (770) 703–6084; facsimile: (770) 703–6097.

SUPPLEMENTARY INFORMATION:

Events Leading to the AD

A proposal to amend part 39 of the Federal Aviation Regulations (14 CFR part 39) to include an AD that would apply to certain Piper Models PA–31, PA–31–300, PA–31–325, PA–31–350, and PA–31P airplanes was published in the **Federal Register** as a notice of proposed rulemaking (NPRM) on July 23, 1997 (62 FR 39490). The NPRM proposed to supersede AD 79–01–04. The proposed AD would retain the repetitive inspection and replacement requirements from AD 79–01–04 on Piper Model PA–31–350 airplanes until an elevator bungee spring of improved design is installed; would require these repetitive inspection and replacement requirements on certain Piper Models PA–31, PA–31–300, PA–31–325, and PA–31P airplanes that are not affected by AD 79–01–04; and would require the following:

- Replacing the elevator bungee link with a Piper part number (P/N) 71086–03 (or FAA-approved equivalent part number) elevator bungee link on all affected airplanes, except for the Piper Model PA–31P airplanes; and
- Repetitively replacing the elevator bungee spring with a Piper P/N 71056–02 (or FAA-approved equivalent part number) or P/N 71056–03 (or FAA-approved equivalent part number) elevator bungee spring.

Accomplishment of the proposed inspections would be in accordance with Piper Service Bulletin (SB) No. 626C, dated February 28, 1997.

Accomplishment of the proposed replacements would be in accordance with *Section IV, Surface Controls,* of the applicable maintenance manual for all the affected airplanes, except for the Model PA–31P airplanes. Accomplishment of the proposed replacements for the Model PA–31P airplanes would be in accordance with Piper Service Bulletin No. 1002, dated June 5, 1997.

The NPRM resulted from reports of cracked elevator bungee springs on airplanes incorporating the older design elevator bungee spring that are not affected by AD 79–01–04, and by reports of cracked elevator bungee springs on airplanes that have improved design elevator bungee springs installed.

Interested persons have been afforded an opportunity to participate in the making of this amendment. Due consideration has been given to the two comments received from one commenter. No comments were received on the FAA's estimate of the cost impact on the public.

Comment No. 1: The Applicability of the Proposed AD

The commenter states that the applicability statement of the NPRM is unclear. The commenter explains that the NPRM references Models PA–31, PA–31–300, PA–31–325, PA–31–350, and PA–31P airplanes. No reference is made to Models PA–31P–350, PA–31T, PA–31T1, PA–31T2, and PA–31T3 airplanes. The commenter feels that the FAA should state whether these airplanes are exempt from the AD.

The FAA concurs that the NPRM references Models PA–31, PA–31–300, PA–31–325, PA–31–350, and PA–31P airplanes, and that no reference is made to Models PA–31P–350, PA–31T, PA–31T1, PA–31T2, and PA–31T3 airplanes. This was the FAA's intent. The FAA does not concur that a statement should be included in the AD to clarify that certain airplanes are excluded. On the contrary, past experience has shown that including such a statement in the AD causes confusion as to what airplanes are affected by the AD. If a particular airplane is not referenced in the Applicability section of the AD, then that airplane is not affected by the AD. No changes to the final rule have been made as a result of this comment.

Comment No. 2: The Use of the Term "Series"

The commenter states that the FAA should not use the term ''series'' when referring to aircraft since it has no precise definition. The commenter explains that the AD may not be enforceable if the Models are not listed, and this NPRM may fall within this category.

The FAA does not concur with never using the term ''series''; however, the FAA does concur that in certain instances the term ''series'' could be misleading. In the Applicability section of the AD, the model designations of all airplanes should be listed; the term series in this section puts the burden of interpreting which airplane models are affected on the owners/operators. The term ''series'' is acceptable when referring to a large number of airplane models in the narrative of the preamble of the AD. In this NPRM, the models are listed in the Applicability section so no changes to the NPRM are necessary. No changes to the final rule have been made as a result of this comment.

The FAA's Determination

After careful review of all available information related to the subject presented above, the FAA has determined that air safety and the public interest require the adoption of the rule as proposed except for minor editorial corrections. The FAA has determined that these minor corrections will not change the meaning of the AD and will not add any additional burden upon the public than was already proposed.

Differences Between This AD and Piper Service Bulletins

Piper Service Bulletin No. 626C, dated February 28, 1997, specifies replacing the bungee links every 1,000 flight hours, and specifies repetitive inspections of both the Piper P/N 42377–02 (or FAA-approved equivalent part number) and P/N 71056–02 (or FAA-approved equivalent part number) elevator bungee springs on Piper PA–31 series airplanes, except for the Model PA–31P airplanes. This AD only requires a one-time replacement of the elevator bungee link on these airplanes, and does not require repetitive inspections of the Piper P/N 71056–02 (or FAA-approved equivalent part number) elevator bungee spring.

The FAA has determined that:

- Based on history and design data, a life limit is not required for the P/N 71086–03 (or FAA-approved equivalent part number) elevator bungee links; and
- Because the Piper P/N 71056–02 (or FAA-approved equivalent part number) and P/N 71056–03 (or FAA-approved equivalent part number) elevator bungee springs have the same structural design, repetitive inspections are only needed on the Piper P/N 42377–02 (or FAA-approved equivalent part number) elevator bungee springs.

In addition, Piper Service Bulletin No. 1002, dated June 5, 1997, specifies repetitively replacing the P/N 42376–05 elevator bungee link on the Piper Model PA–31P airplanes. The FAA has determined that the P/N 42376–05 elevator bungee link is compatible with the P/N 42377–02 and P/N 71056–03 elevator bungee springs and replacement of the elevator bungee links on Piper Model PA–31P airplanes is not necessary.

Cost Impact

The FAA estimates that 1,325 airplanes in the U.S. registry will be affected by this AD, that it will take approximately 1 workhour per airplane to accomplish the required replacement, and that the average labor rate is approximately $60 an hour. Parts cost approximately $60 per airplane. Based on these figures, the total cost impact of this AD on U.S. operators is estimated to be $159,000.

The above figures only take into account the cost of the initial

replacement and do not take into account the cost of repetitive replacements. The FAA has no way of determining how many repetitive replacements each owner/operator may incur over the life of an affected airplane. The figure also does not include the cost of the repetitive inspections for the affected Piper PA–31 and PA–31P series airplanes that would be required until mandatory replacement of the elevator bungee spring. The FAA has no way of determining how many of the affected airplanes will have the old design elevator bungee spring still installed and will be subject to the required repetitive inspections. The FAA believes that most affected Piper PA–31 and PA–31P series airplanes have already exceeded 1,000 hours TIS and the owners/operators will replace the elevator bungee spring within 100 hours TIS of the effective date of the AD instead of repetitively inspecting the older design elevator bungee spring.

Regulatory Impact

The regulations adopted herein will not have substantial direct effects on the States, on the relationship between the national government and the States, or on the distribution of power and responsibilities among the various levels of government. Therefore, in accordance with Executive Order 12612, it is determined that this final rule does not have sufficient federalism implications to warrant the preparation of a Federalism Assessment.

For the reasons discussed above, I certify that this action (1) is not a ''significant regulatory action'' under Executive Order 12866; (2) is not a ''significant rule'' under DOT Regulatory Policies and Procedures (44 FR 11034, February 26, 1979); and (3) will not have a significant economic impact, positive or negative, on a substantial number of small entities under the criteria of the Regulatory Flexibility Act. A copy of the final evaluation prepared for this action is contained in the Rules Docket. A copy of it may be obtained by contacting the Rules Docket at the location provided under the caption **ADDRESSES**.

List of Subjects in 14 CFR Part 39

Air transportation, Aircraft, Aviation safety, Incorporation by reference, Safety.

Adoption of the Amendment

Accordingly, pursuant to the authority delegated to me by the Administrator, the Federal Aviation Administration amends part 39 of the Federal Aviation Regulations (14 CFR part 39) as follows:

PART 39—AIRWORTHINESS DIRECTIVES

1. The authority citation for part 39 continues to read as follows:

Authority: 49 U.S.C. 106(g), 40113, 44701.

§ 39.13 [Amended]

2. Section 39.13 is amended by removing Airworthiness Directive (AD) 79–01–04, Amendment 39–3381, and by adding a new AD to read as follows:

98–08–18 The New Piper Aircraft, Inc. (formerly Piper Aircraft Corporation): Amendment 39–10467; Docket No. 90–CE–65–AD. Supersedes 79–01–04, Amendment 39–3381.

Applicability: The following airplane models and serial numbers, certificated in any category:

Models	Serial Nos.
PA–31, PA–31–300, and PA–31–325.	31–2 through 31–8312019.
PA–31–350	31–5001 through 31–8553002.
PA–31P	31P–1 through 31P–7730012.

Note 1: This AD applies to each airplane identified in the preceding applicability provision, regardless of whether it has been modified, altered, or repaired in the area subject to the requirements of this AD. For airplanes that have been modified, altered, or repaired so that the performance of the requirements of this AD is affected, the owner/operator must request approval for an alternative method of compliance in accordance with paragraph (g) of this AD. The request should include an assessment of the effect of the modification, alteration, or repair on the unsafe condition addressed by this AD; and, if the unsafe condition has not been eliminated, the request should include specific proposed actions to address it.

Compliance: Required as indicated in the body of this AD, unless already accomplished.

To prevent failure of the elevator bungee spring, which could result in a reduction in elevator control and consequent loss of control of the airplane, accomplish the following:

(a) For any affected airplane incorporating a Piper part number (P/N) 42377–02 (or FAA-approved equivalent part number) elevator bungee spring where the elevator bungee spring has 900 hours TIS or less, accomplish the following:

(1) Within the next 100 hours time-in-service (TIS) after the effective date of this AD, unless already accomplished (compliance with AD 79–01–04), and thereafter at intervals not to exceed 100 hours TIS until the replacement required by paragraph (b) of this AD is accomplished, inspect the elevator bungee spring for cracks or surface deformities in accordance with the ACCOMPLISHMENT INSTRUCTIONS section of Piper Service Bulletin No. 626C, dated February 28, 1997.

Note 2: The 100-hour TIS repetitive inspection compliance time is the same as that in AD 79–01–04 (superseded by this action). This compliance time is being retained to provide credit and continuity for already-accomplished and future inspections.

Note 3: Piper Service Bulletin No. 626C, dated February 28, 1997, lists Piper Models PA–31, PA–31–300, PA–31–325, and PA–31–350 airplanes in the Models Affected section. For purposes of this AD, the inspection procedures included in this service bulletin also apply to the Piper Model PA–31P airplanes.

(2) If any cracks or surface deformities are found during any inspection required by paragraph (a)(1) of this AD, prior to further flight, accomplish the following:

(i) For all affected Models PA–31, PA–31–300, PA–31–325, and PA–31–350 airplanes, replace the elevator bungee link with a Piper P/N 71086–03 (or FAA-approved equivalent part number) elevator bungee link;

(ii) For all the affected airplanes, replace the elevator bungee spring with a Piper P/N 71056–02 (or FAA-approved equivalent part number) or Piper P/N 71056–03 (or FAA-approved equivalent part number) elevator bungee spring. Accomplish this in accordance with *Section IV, Surface Controls,* of the applicable maintenance manual.

(b) Upon accumulating 1,000 hours TIS on a Piper P/N 42377–02, 71056–02, or 71056–03 (or FAA-approved equivalent part number for any of the above) elevator bungee spring or within the next 100 hours TIS after the effective date of this AD, whichever occurs later, accomplish the following:

(1) For all affected Models PA–31, PA–31–300, PA–31–325, and PA–31–350 airplanes, replace the elevator bungee link with a Piper P/N 71086–03 (or FAA-approved equivalent part number) elevator bungee link in accordance with *Section IV, Surface Controls,* of the applicable maintenance manual, unless already accomplished.

(2) For all affected airplanes, replace the elevator bungee spring with a Piper P/N 71056–02 (or FAA-approved equivalent part number) or Piper P/N 71056–03 (or FAA-approved equivalent part number).

(i) For all affected Models PA–31, PA–31–300, PA–31–325, and PA–31–350 airplanes, accomplish this replacement in accordance with *Section IV, Surface Controls,* of the applicable maintenance manual.

(ii) For the affected Model PA–31P airplanes, accomplish the replacement in accordance with the INSTRUCTIONS section in Piper Service Bulletin No. 1002, dated June 5, 1997.

(c) For all affected airplanes, repetitively replace the elevator bungee spring with a Piper P/N 71056–02 (or FAA-approved equivalent part number) or Piper P/N 71056–03 (or FAA-approved equivalent part number) elevator bungee spring at intervals not to exceed 1,000 hours TIS.

(1) Accomplish the repetitive replacements in accordance with the applicable service information specified in either paragraph (b)(2)(i) or (b)(2)(ii) of this AD.

(2) If an affected airplane already had the elevator bungee spring and link replaced as specified in paragraphs (b)(1) and (b)(2) of this AD, then only the repetitive replacements of the elevator bungee spring as specified in paragraph (c) of this AD are required.

(d) The repetitive inspections required by paragraph (a) of this AD may be terminated when the replacements specified in paragraphs (a)(2) and (b)(1) and (b)(2) of this AD are accomplished.

(e) As of the effective date of this AD, no person shall install either a Piper P/N 42377–02 (or FAA-approved equivalent part number) elevator bungee spring or a Piper P/N 42376–02 (or FAA-approved equivalent part number) elevator bungee link.

Note 4: The actions specified by this AD are different from those in Piper SB No. 626C, dated February 28, 1997. This AD takes precedence over the service bulletin. Piper SB No. 626C, dated February 28, 1997, specifies replacing the bungee links every 1,000 flight hours, and specifies repetitive inspections of both the Piper P/N 42377–02 and P/N 71056–02 elevator bungee springs. This AD requires a one-time replacement of the elevator bungee link, and does not require repetitive inspections of the Piper P/N 71056–02 elevator bungee springs on any of the affected airplanes.

(f) Special flight permits may be issued in accordance with sections 21.197 and 21.199 of the Federal Aviation Regulations (14 CFR 21.197 and 21.199) to operate the airplane to a location where the requirements of this AD can be accomplished.

(g) An alternative method of compliance or adjustment of the compliance time that provides an equivalent level of safety may be approved by the Manager, Atlanta Aircraft Certification Office (ACO), One Crown Center, 1895 Phoenix Boulevard, suite 450, Atlanta, Georgia 30349.

(1) The request shall be forwarded through an appropriate FAA Maintenance Inspector, who may add comments and then send it to the Manager, Atlanta ACO.

(2) Alternative methods of compliance approved in accordance with AD 79–01–04 (superseded by this action) are not considered approved as alternative methods of compliance with this AD.

Note 5: Information concerning the existence of approved alternative methods of compliance with this AD, if any, may be obtained from the Atlanta ACO.

(h) The inspection required by this AD shall be done in accordance with Piper Service Bulletin No. 626C, dated February 28, 1997. The replacement required by this AD (for Model PA–31P airplanes) shall be done in accordance with Piper Service Bulletin No. 1002, dated June 5, 1997. This incorporation by reference was approved by the Director of the Federal Register in accordance with 5 U.S.C. 552(a) and 1 CFR part 51. Copies may be obtained from The New Piper Aircraft, Inc., 2926 Piper Drive, Vero Beach, Florida 32960. Copies may be inspected at the FAA, Central Region, Office of the Regional Counsel, Room 1558, 601 E. 12th Street, Kansas City, Missouri, or at the Office of the Federal Register , 800 North Capitol Street, NW, suite 700, Washington, DC.

(i) This amendment supersedes AD 79–01–04, Amendment 39–3381.

(j) This amendment becomes effective on May 26, 1998.

Issued in Kansas City, Missouri, on April 6, 1998.

Marvin R. Nuss,

Acting Manager, Small Airplane Directorate, Aircraft Certification Service.

[FR Doc. 98–9750 Filed 4–14–98; 8:45 am]

BILLING CODE 4910–13–U

DEPARTMENT OF TRANSPORTATION

Federal Aviation Administration

14 CFR Part 71

[Airspace Docket No. 97–ANM–16]

Amendment of Class E Airspace; McCall, ID

AGENCY: Federal Aviation Administration (FAA), DOT.

ACTION: Final rule.

SUMMARY: This action amends the McCall, ID, Class E airspace area. This revision of airspace is necessary in order to fully encompass the procedures for two new Standard Instrument Approach Procedures (SIAPS) at the McCall Airport, McCall, ID.

EFFECTIVE DATE: 0901 UTC, June 18, 1998.

FOR FURTHER INFORMATION CONTACT: Dennis Ripley, ANM–520.6, Federal Aviation Administration, Docket No. 97–ANM–16, 1601 Lind Avenue S.W., Renton, Washington 98055–4056; telephone number: (425) 227–2527.

SUPPLEMENTARY INFORMATION:

History

On January 26, 1998, the FAA proposed to amend Title 14, Code of Federal Regulations, part 71 (14 CFR part 71) by revising the McCall Class E airspace area at McCall, ID, (63 FR 3674). This action provides the airspace to fully encompass two SIAPs for the McCall Airport. The coordinates for the airport were recently updated and are corrected herein. Interested parties were invited to participate in the rulemaking proceeding by submitting written comments on the proposal. No comments were received.

The coordinates for this airspace docket are based on North American Datum 83. Class E airspace areas extending upward from 700 feet or more above the surface of the earth are published in Paragraph 6005 of FAA Order 7400.9E, dated September 10, 1997, and effective September 16, 1997, which is incorporated by reference in 14 CFR 71.1. The Class E airspace designation listed in this document will be published subsequently in the Order.

The Rule

This amendment to 14 CFR part 71 modifies Class E airspace at McCall, ID. This modification of airspace is necessary to fully contain the Global Positioning System (GPS) Runway 34 SIAP and the Non-directional Radio Beacon (NDB) Runway 34 SIAP within controlled airspace. This revision adds approximately 45 miles of additional airspace to the west, a 17 mile extension to the south, and smaller extensions to the north and east. The FAA establishes Class E airspace extending upward from 700 feet AGL, where necessary, to contain aircraft transitioning between the terminal and en route environments. The intended effect of this rule is designed to provide safe and efficient use of the navigable airspace and to promote safe flight operations under Instrument Flight Rules (IFR) at the McCall Airport and between the terminal and en route transition stages.

The FAA has determined that this regulation only involves an established body of technical regulations for which frequent and routine amendments are necessary to keep them operationally current. It, therefore, (1) is not a ''significant regulatory action'' under Executive Order 12866; (2) is not a ''significant rule'' under DOT Regulatory Policies and Procedures (44 FR 11034; February 26, 1979); and (3) does not warrant preparation of a Regulatory Evaluation as the anticipated impact is so minimal. Since this is a routine matter that will only affect air traffic procedures and air navigation, it is certified that this rule will not have a significant economic impact on a substantial number of small entities under the criteria of the Regulatory Flexibility Act.

List of Subjects in 14 CFR Part 71

Airspace, Incorporation by reference, Navigation (air).

Adoption of the Amendment

In consideration of the foregoing, the Federal Aviation Administration amends 14 CFR Part 71 as follows:

PART 71—DESIGNATION OF CLASS A, CLASS B, CLASS C, CLASS D, AND CLASS E AIRSPACE AREAS; AIRWAYS; ROUTES; AND REPORTING POINTS

1. The authority citation for 14 CFR part 71 continues to read as follows:

Authority: 49 U.S.C. 106(g), 40103, 40113, 40120; E.O. 10854, 24 FR 9565, 3 CFR, 1959–1963 Comp., p. 389.

§ 71.1 [Amended]

2. The incorporation by reference in 14 CFR 71.1 of the Federal Aviation Administration Order 7400.9E, Airspace Designations and Reporting Points, dated September 10, 1997, and effective September 16, 1997, is amended as follows:

Paragraph 6005 Class E airspace areas extending upward from 700 feet or more above the surface of the earth.

* * * * *

ANM ID E5 McCall, ID [Revised]

McCall Airport, ID
(Lat. 44°53′20″ N, long, 116°06′06″ W)
McCall NDB
(Lat. 44°48′20″ N, long. 116°06′08″ W)

That airspace extending upward from 700 feet above the surface within 4 miles west and 8 miles east of the 169° and 349° bearings from the McCall NDB extending from 16 miles south to 11 miles north of the NDB; that airspace extending upward from 1,200 feet above the surface within a line from lat. 44°12′00″ N, long. 116°06′00″ W; to lat. 45°05′00″ N, long. 117°28′00″ W; to lat. 45°15′00″ N, long. 117°19′00″ W; to lat. 45°05′30″ N, long. 115°52′00″ W; to lat. 44°16′00″ N, long. 115°40′00″ W; thence to the point of beginning, excluding Federal airways, La Grande and Baker City, OR, and Boise, ID, Class E airspace areas.

* * * * *

Issued in Seattle, Washington, on March 26, 1998.

Glenn A. Adams III,

Acting Manager, Air Traffic Division, Northwest Mountain Region.

[FR Doc. 98–9836 Filed 4–14–98; 8:45 am]

BILLING CODE 4910–13–M

DEPARTMENT OF TRANSPORTATION

Federal Aviation Administration

14 CFR Part 71

[Airspace Docket No. 97–ANM–15]

Revocation of Class E Airspace; Blue Mesa, CO; and Establishment of Class E Airspace; Gunnison, CO

AGENCY: Federal Aviation Administration (FAA), DOT.

ACTION: Final rule.

SUMMARY: This action revokes the Class E airspace at Blue Mesa, CO, and establishes a larger Class E airspace area in its place, which is designated the Gunnison, CO, Class E airspace area. The Blue Mesa Class E airspace area was incorrectly named for a navigational aid rather than for the airport served by the airspace. This is contrary to FAA policy. This action, in effect, renames the Class E airspace area. This action also increases the size of the Class E airspace area. The additional controlled airspace is necessary to accommodate a new Global Positioning System (GPS) standard instrument approach procedure (SIAP) serving the Gunnison County Airport, Gunnison, CO.

EFFECTIVE DATE: 0901 UTC, June 18, 1998.

FOR FURTHER INFORMATION CONTACT: Dennis Ripley, ANM–520.6, Federal Aviation Administration, Docket No. 97–ANM–15, 1601 Lind Avenue SW., Renton, Washington, 98055–4056; telephone number: (425) 227–2527.

SUPPLEMENTARY INFORMATION:

History

On January 26, 1998, the FAA proposed to amend Title 14, Code of Federal Regulations, part 71 (14 CFR part 71) by revoking the Blue Mesa, CO, Class E airspace area while establishing a larger and correctly named Gunnison, CO, Class E airspace area (63 FR 3675). Interested parties were invited to participate in the rulemaking proceeding by submitting written comments on the proposal. No comments were received.

The coordinates for this airspace docket are based on North American Datum 83. Class E airspace areas extending upward from 700 feet or more above the surface of the earth are published in Paragraph 6005 of FAA Order 7400.9E, dated September 10, 1997, and effective September 16, 1997, which is incorporated by reference in 14 CFR 71.1. The Class E airspace designation listed in this document will be published subsequently in the Order.

The Rule

This amendment to 14 CFR part 71 revokes the existing Blue Mesa, CO, Class E airspace and establishes Class E airspace at Gunnison, CO. The establishment of the Gunnison, CO, airspace adds a 2 nautical mile 700-foot Class E area extension to the northeast, and modifies 1200-foot Class E airspace to the south and the east of the existing Blue Mesa, CO, airspace. The extensions are necessary to meet the airspace criteria for aircraft transitioning between the terminal and en route environments and to fully encompass a new GPS–B SIAP to the Gunnison County Airport. The FAA establishes Class E airspace extending upward from 700 feet AGL, where necessary, to contain aircraft transitioning between the terminal and en route environments. The intended effect of this rule is designed to provide safe and efficient use of the navigable airspace and to promote safe flight operations under Instrument Flight Rules at the Gunnison County Airport and between the terminal and en route transition stages.

The FAA has determined that this regulation only involves an established body of technical regulations for which frequent and routine amendments are necessary to keep them operationally current. It, therefore, (1) is not a ''significant regulatory action'' under Executive Order 12866; (2) is not a ''significant rule'' under DOT Regulatory Policies and Procedures (44 FR 11034; February 26, 1979); and (3) does not warrant preparation of a Regulatory Evaluation as the anticipated impact is so minimal. Since this is a routine matter that will only affect air traffic procedures and air navigation, it is certified that this rule will not have a significant economic impact on a substantial number of small entities under the criteria of the Regulatory Flexibility Act.

List of Subjects in 14 CFR Part 71

Airspace, Incorporation by reference, Navigation (air).

Adoption of the Amendment

In consideration of the foregoing, the Federal Aviation Administration amends 14 CFR part 71 as follows:

PART 71—DESIGNATION OF CLASS A, CLASS B, CLASS C, CLASS D, AND CLASS E AIRSPACE AREAS; AIRWAYS; ROUTES; AND REPORTING POINTS

1. The authority citation for 14 CFR part 71 continues to read as follows:

Authority: 49 U.S.C. 106(g), 40103, 40113, 40120; E.O. 10854, 24 FR 9565, 3 CFR, 1959–1963 Comp., p. 389.

§ 71.1 [Amended]

2. The incorporation by reference in 14 CFR 71.1 of the Federal Aviation Administration Order 7400.9E, Airspace Designations and Reporting Points, dated September 10, 1997, and effective September 16, 1997, is amended as follows:

Paragraph 6005 Class E airspace areas extending upward from 700 feet or more above the surface of the earth.

* * * * *

ANM CO E5 Blue Mesa, CO [Removed]

* * * * *

ANM CO E5 Gunnison, CO [New]

Gunnison County Airport, CO
(Lat. 38°32′02″ N, long. 106°55′59″ W)

That airspace extending upward from 700 feet above the surface within an area bounded by a line beginning at lat. 38°11′25″

N, long. 107°12′30″ W; to lat. 38°21′25″ N, long. 107°25′00″ to W; lat. 38°24′30″ N, long. 107°21′00″ W; to lat. 38°33′30″ N, long. 107°20′00″ W; to lat. 38°31′25″ N, long. 107°12′30″ W; to lat. 38°42′00″ N, long. 106°59′00″ W; to lat. 38°32′10″ N, long. 106°46′00″ W; thence to the point of beginning; that airspace extending upward from 1,200 feet above the surface within an area bounded by a line beginning at lat. 37°59′30″ N, long. 107°16′00″ W; to lat. 38°17′45″ N, long. 107°39′00″ W; to lat. 38°45′40″ N, long. 106°54′00″ W; to lat. 38°16′40″ N, long. 106°08′00″ W; to lat. 38°09′00″ N, long. 106°16′00″ W; to lat. 38°18′30″ N, long. 106°47′00″ W; thence to the point of beginning.

* * * * *

Issued in Seattle, Washington, on April 2, 1998.

Joe E. Gingles,

Acting Assistant Manager, Air Traffic Division, Northwest Mountain Region.

[FR Doc. 98–9835 Filed 4–14–98; 8:45 am]

BILLING CODE 4910–13–M

DEPARTMENT OF TRANSPORTATION

Federal Aviation Administration

14 CFR Part 71

[Airspace Docket No. 96–ASW–30]

RIN 2120–AA66

Modification to the Gulf of Mexico High Offshore Airspace Area

AGENCY: Federal Aviation Administration (FAA), DOT.

ACTION: Final rule.

SUMMARY: This action amends the Gulf of Mexico High Offshore airspace area by extending the present airspace area west and south to the boundary of the Houston Air Route Traffic Control Center (ARTCC) Flight Information Region/Control Area (FIR/CTA). Additionally, this action establishes the vertical limits of the airspace area expansion from Flight Level (FL) 280 up to and including FL 600. The FAA is taking this action to provide additional airspace in which domestic air traffic procedures may be used to separate and manage aircraft, resulting in the enhanced utilization of that airspace.

EFFECTIVE DATE: 0901 UTC, June 18, 1998.

FOR FURTHER INFORMATION CONTACT: Ellen Crum, Airspace and Rules Division, ATA–400, Office of Air Traffic Airspace Management, Federal Aviation Administration, 800 Independence Avenue, SW., Washington, DC 20591; telephone: (202) 267–8783.

SUPPLEMENTARY INFORMATION:

Background

On March 2, 1993, the FAA published a final rule (58 FR 12128) which, in part, redesignated certain control areas over international waters as offshore airspace areas. The redesignations were necessary to comply with the Airspace Reclassification final rule (56 FR 65638; December 17, 1991).

One of the areas affected by the March 2, 1993, final rule was the Gulf of Mexico Control Area. This area was divided vertically into two areas, one of which was redesignated as the Gulf of Mexico High Offshore airspace area.

In June 1996 the FAA completed phase II of an evaluation of the airspace over the Gulf of Mexico. The evaluation was a combined effort with representatives from the FAA, Servicios a la Navegacion en El Espacio Aereo Mexicano, and other airspace users. The objective of the evaluation was, in part, to identify areas where air traffic services, air traffic operations, and utilization of airspace could be improved. One of the outcomes of this evaluation was the determination that system capacity would be enhanced by modifying air traffic control (ATC) procedures used to control aircraft operations in the airspace over the Gulf of Mexico. Currently, International Civil Aviation Organization (ICAO) oceanic ATC procedures are used to separate and manage aircraft operations that extend beyond the lateral boundary of the existing Gulf of Mexico High Offshore airspace area. Modifying the Gulf of Mexico High Offshore airspace area by extending the boundaries further west and south of the current location to the Houston ARTCC FIR/CTA, allows the application of domestic ATC separation procedures over a larger area. This action to modify the offshore airspace area will enhance system capacity and allow for more efficient utilization of that airspace.

On September 11, 1997, the FAA proposed to amend 14 CFR part 71 to modify the Gulf of Mexico High Offshore airspace area (62 FR 47781). Interested parties were invited to participate in this rulemaking proceeding by submitting written comments on the proposal to the FAA. No comments objecting to the proposal were received. Except for editorial changes, this amendment is the same as that proposed in the notice.

Offshore airspace areas are published in paragraph 2003 of FAA Order 7400.9E, dated September 10, 1997, and effective September 16, 1997, which is incorporated by reference in 14 CFR 71.1. The Offshore airspace area listed in this document will be published subsequently in the Order.

The Rule

This amendment to 14 CFR part 71 modifies the Gulf of Mexico High Offshore airspace area by extending the present airspace area west and south to the Houston ARTCC FIR/CTA. This modification will allow the application of domestic ATC separation procedures, in lieu of ICAO separation procedures, thereby, enhancing system capacity, and allowing for more efficient use of the airspace.

The FAA has determined that this regulation only involves an established body of technical regulations for which frequent and routine amendments are necessary to keep them operationally current. It, therefore—(1) is not a ''significant regulatory action'' under Executive Order 12866; (2) is not a ''significant rule'' under DOT Regulatory Policies and Procedures (44 FR 11034; February 26, 1979); and (3) does not warrant preparation of a regulatory evaluation as the anticipated impact is so minimal. Since this is a routine matter that will only affect air traffic procedures and air navigation, it is certified that this rule will not have a significant economic impact on a substantial number of small entities under the criteria of the Regulatory Flexibility Act.

ICAO Considerations

As part of this action relates to navigable airspace outside the United States, this rule is submitted in accordance with the ICAO International Standards and Recommended Practices.

The application of International Standards and Recommended Practices by the FAA, Office of Air Traffic Airspace Management, in areas outside U.S. domestic airspace is governed by the Convention on International Civil Aviation. Specifically, the FAA is governed by Article 12 and Annex 11, which pertain to the establishment of necessary air navigational facilities and services to promote the safe, orderly, and expeditious flow of civil air traffic. The purpose of the document is to ensure that civil aircraft operations on international air routes are performed under uniform conditions. The International Standards and Recommended Practices in Annex 11 apply to airspace under the jurisdiction of a contracting state, derived from ICAO. Annex 11 provisions apply when air traffic services are provided and a contracting state accepts the responsibility of providing air traffic services over high seas or in airspace of undetermined sovereignty. A

contracting state accepting this responsibility may apply the International Standards and Recommended Practices that are consistent with standards and practices utilized in its domestic jurisdiction.

In accordance with Article 3 of the Convention, state owned aircraft are exempt from the Standards and Recommended Practices of Annex 11. The United States is a contracting state to the Convention. Article 3(d) of the Convention provides that participating state aircraft will be operated in international airspace with due regard for the safety of civil aircraft.

Since this action involves, in part, the designation of navigable airspace outside the United States, the Administrator has consulted with the Secretary of State and the Secretary of Defense in accordance with the provisions of Executive Order 10854.

List of Subjects in 14 CFR Part 71

Airspace, Incorporation by reference, Navigation (air).

Adoption of the Amendment

In consideration of the foregoing, the Federal Aviation Administration amends 14 CFR part 71 as follows:

PART 71—DESIGNATION OF CLASS A, CLASS B, CLASS C, CLASS D, AND CLASS E AIRSPACE AREAS; AIRWAYS; ROUTES; AND REPORTING POINTS

1. The authority citation for part 71 continues to read as follows:

Authority: 49 U.S.C. 106(g), 40103, 40113, 40120; E.O. 10854, 24 FR 9565, 3 CFR, 1959–1963 Comp., p. 389.

§ 71.1 [Amended]

2. The incorporation by reference in 14 CFR 71.1 of the Federal Aviation Administration Order 7400.9E, Airspace Designations and Reporting Points, dated September 10, 1997, and effective September 16, 1997, is amended as follows:

Paragraph 2003—Offshore Airspace Areas

* * * * *

Gulf of Mexico High [Revised]

That airspace extending upward from 18,000 feet MSL to and including FL 600 bounded on the west, north, and east by a line 12 miles offshore and parallel to the Texas, Louisiana, Mississippi, Alabama, and Florida shorelines, and bounded on the south from east to west by the southern boundary of the Jacksonville ARTCC, Miami Oceanic CTA/FIR, Houston CTA/FIR and lat. 26°00′00″ N.; and that airspace extending upward from FL 280 to and including FL 600 beginning at lat. 28°12′20″ N., long. 95°24′20″ W.; then clockwise to lat. 28°15′00″ N., long. 94°00′00″ W.; to lat. 28°15′00″ N., long. 89°53′00″ W.; to lat. 26°55′00″ N., long. 89°35′00″ W.; to lat. 26°21′00″ N., long. 89°30′00″ W.; to lat. 24°58′00″ N., long. 89°17′30″ W.; to lat. 24°30′00″ N., long. 89°14′00″ W.; to lat. 24°30′00″ N., long. 93°00′00″ W.; to lat. 25°23′00″ N., long. 94°42′00″ W.; to lat. 26°00′00″ N., long. 95°55′00″ W.; to lat. 26°00′00″ N., long. 95°59′00″ W.; to lat. 26°04′45″ N., long. 95°56′49″ W.; to lat. 26°52′00″ N., long. 95°35′00″ W.; to lat. 27°38′00″ N., long. 95°30′00″ W.; to lat. 28°00′00″ N., long. 95°27′00″ W. to point of beginning.

* * * * *

Issued in Washington, DC, on April 9, 1998.

Reginald C. Matthews,

Acting Program Director for Air Traffic Airspace Management.

[FR Doc. 98–9940 Filed 4–14–98; 8:45 am]

BILLING CODE 4910–13–P

DEPARTMENT OF HEALTH AND HUMAN SERVICES

Food and Drug Administration

21 CFR Part 5

Delegations of Authority and Organization

AGENCY: Food and Drug Administration, HHS.

ACTION: Final rule.

SUMMARY: The Food and Drug Administration (FDA) is amending the regulations for delegations of authority and organization to set forth the current organizational structure of the agency as well as the current addresses for headquarters and field offices. This action is necessary to ensure the continued accuracy of the regulations.

EFFECTIVE DATE: April 15, 1998.

FOR FURTHER INFORMATION CONTACT: Rudy Guillen, Division of Management Systems and Policy (HFA–340), Food and Drug Administration, 5600 Fishers Lane, Rockville, MD 20857, 301–827–4810.

SUPPLEMENTARY INFORMATION: The regulations are being amended in subpart C of part 5 (21 CFR part 5) to reflect the central organization of the agency and to provide current addresses for headquarters and field offices.

Notice and comment on these amendments are not necessary under the Administrative Procedure Act because this is a rule of agency organization (5 U.S.C. 553(b)).

List of Subjects in 21 CFR Part 5

Authority delegations (Government agencies), Imports, Organization and functions (Government agencies).

Therefore, under the Federal Food, Drug, and Cosmetic Act and under authority delegated to the Commissioner of Food and Drugs, 21 CFR part 5 is amended as follows:

PART 5—DELEGATIONS OF AUTHORITY AND ORGANIZATION

1. The authority citation for 21 CFR part 5 continues to read as follows:

Authority: 5 U.S.C. 504, 552, App. 2; 7 U.S.C. 138a, 2271; 15 U.S.C. 638, 1261–1282, 3701–3711a; 15 U.S.C. 1451–1461; 21 U.S.C. 41–50, 61–63, 141–149, 321–394, 467f, 679(b), 801–886, 1031–1309; 35 U.S.C. 156; 42 U.S.C. 241, 242, 242a, 242l, 242n, 243, 262, 263, 264, 265, 300u–300u–5, 300aa–1; 1395y, 3246b, 4332, 4831(a), 10007–10008; E.O. 11921, 41 FR 24294, 3 CFR, 1977 Comp., p. 124–131; E.O. 12591, 52 FR 13414, 3 CFR, 1988 Comp., p. 220–223.

2. Section 5.200 is revised to read as follows:

§ 5.200 Headquarters.

The central organization of the Food and Drug Administration consists of the following:

Office of the Commissioner. [1]
Office of the Chief Counsel.
Office of Executive Secretariat.
Office of Equal Employment and Civil Rights.
Office of the Administrative Law Judge.
Office of Internal Affairs.
Office of Operations.
Center for Biologics Evaluation and Research. [2]
Office of the Center Director
Scientific Advisors and Consultants Staff.
Equal Employment Opportunity Staff.
Quality Assurance Staff.
Congressional and Public Affairs Staff.
Regulations and Policy Staff.
Office of Management
Division of Planning, Evaluation, and Budget.
Division of Management Services.
Division of Information Technology Operations.
Division of Infrastructure and Systems Development.
Office of Compliance and Biologics Quality
Team Biologics Liaison Staff.
Division of Case Management.
Division of Inspections and Surveillance.
Division of Manufacturing and Product Quality.
Office of Blood Research and Review
Division of Transfusion Transmitted Diseases.

[1] Mailing address: 5600 Fishers Lane, Rockville, MD 20857.

[2] Mailing address: 1401 Rockville Pike, Rockville, MD 20852–1448.

Division of Hematology.
Division of Blood Applications.
Division of Blood Establishment and Products.
Office of Therapeutics Research and Review
Division of Cytokine Biology.
Division of Cellular and Gene Therapies.
Division of Hematologic Products.
Division of Monoclonal Antibodies.
Division of Clinical Trial Design and Analysis.
Division of Application Review and Policy.
Regulatory Information Management Staff.
Office of Vaccines Research and Review
Division of Allergenic Products and Parasitology.
Division of Bacterial Products.
Division of Viral Products.
Division of Vaccines and Related Products Applications.
Office of Communication, Training, and Manufacturers Assistance
Division of Congressional and Public Affairs.
Division of Manufacturers Assistance and Training.

Center for Food Safety and Applied Nutrition. [3]
Office of the Center Director
Equal Employment Opportunity Staff.
Office of Policy, Planning, and Strategic Initiatives
Executive Operations Staff.
Office of Programs
Beltsville Technical Operations Staff.
Office of Cosmetics and Colors
Division of Programs and Enforcement Policy.
Division of Science and Applied Technology.
Office of Food Labeling
Division of Programs and Enforcement Policy.
Division of Technical Evaluation.
Division of Science and Applied Technology.
Office of Premarket Approval
Division of Product Policy.
Division of Petition Control.
Division of Health Effects Evaluation.
Division of Molecular Biological Research and Evaluation.
Division of Product Manufacture and Use.
Office of Plant and Dairy Foods and Beverages
Division of Programs and Enforcement Policy.
Division of Virulence Assessment.
Division of Pesticides and Industrial Chemicals.
Division of Natural Products.
Division of Food Processing and Packaging.
Office of Seafood
Division of Special Programs.
Division of Programs and Enforcement Policy.
Division of Science and Applied Technology.
Office of Special Nutritionals
Clinical Research and Review Staff.
Division of Programs and Enforcement Policy.
Division of Science and Applied Technology.
Office of Special Research Skills
Division of Toxicology Research.
Division of Microbiological Studies.
Office of Systems and Support
Quality Assurance Staff.
Office of Constituent Operations
Consumer Education Staff.
Legislative Activities Staff.
Industry Activities Staff.
International Activities Staff.
Office of Field Programs
Division of Enforcement and Programs.
Division of HACCP Programs.
Division of Cooperative Programs.
Office of Management Systems
Safety Management Staff.
Division of Information Resources Management.
Division of Planning and Resources Management.
Office of Scientific Analysis and Support
Division of Mathematics.
Division of General Scientific Support.
Division of Market Studies.

Center for Drug Evaluation and Research. [4]
Office of the Center Director
Advisors and Consultants Staff.
Equal Employment Opportunity Staff.
Pilot Drug Evaluation Staff.
Executive Operations Staff.
Regulatory Policy Staff.
Office of Management
Special Projects Staff.
Division of Planning, Evaluation, and Resource Management.
Division of Management Services.
Office of Training and Communications[1]
Freedom of Information Staff.
Division of Communications Management.
Division of the Medical Library.
Division of Training and Development.
Office of Compliance [5]
Division of Manufacturing and Product Quality.
Division of Scientific Investigations.
Division of Prescription Drug Compliance and Surveillance.
Division of Labeling and Nonprescription Drug Compliance.
Office of Information Technology[1]
Quality Assurance Staff.
Technology Support Services Staff.
Division of Data Management and Services.
Division of Applications Development and Services.
Division of Infrastructure Management and Services.
Office of Review Management[4]
Advisors and Consultants Staff.
Office of Drug Evaluation I
Division of Cardio-Renal Drug Products.
Division of Drug Marketing, Advertising and Communication.[1]
Division of Neuropharmacological Drug Products.
Division of Oncology Drug Products.
Office of Drug Evaluation II
Division of Metabolic and Endocrine Drug Products.
Division of Pulmonary Drug Products.
Division of Reproductive and Urologic Drug Products.
Office of Drug Evaluation III
Division of Anesthetic, Critical Care, and Addiction Drug Products.
Division of Gastro-Intestinal and Coagulation Drug Products.
Division of Medical Imaging and Radiopharmaceutical Drug Products.
Office of Drug Evaluation IV [6]
Division of Anti-Infective Drug Products.
Division of Anti-Viral Drug Products.
Division of Special Pathogen and Immunologic Drug Products.
Office of Drug Evaluation V
Division of Anti-Inflammatory, Analgesic, and Ophthalmologic Drug Products.
Division of Dermatologic and Dental Drug Products.
Division of Over-The-Counter Drug Evaluation.
Office of Epidemiology and Biostatistics[1]
Quantitative Methods and Research Staff.
Division of Biometrics I.[4]
Division of Pharmacovigilance and Epidemiology.[1]
Division of Biometrics II.
Division of Biometrics III.
Division of Biometrics IV.[6]
Office of Pharmaceutical Science[4]
Quality Implementation Staff.[1]
Operations Staff.[4]
Office of Clinical Pharmacology and Biopharmaceutics
Pharmacometrics Staff.
Division of Pharmaceutical Evaluation I.[4]
Division of Pharmaceutical Evaluation II.[1]

[3] Mailing address: 200 C St. SW., Washington, DC 20204.

[4] Mailing address: 1451 Rockville Pike, Rockville MD 20857

[5] Mailing address: 7520 Standish Pl., Rockville, MD 20857

[6] Mailing address: 9200 Corporate Blvd., Rockville, MD 20850

Division of Pharmaceutical Evaluation III.[6]
Office of Generic Drugs[7]
Division of Bioequivalence.
Division of Chemistry I.
Division of Chemistry II.
Division of Labeling and Program Support.
Office of New Drug Chemistry[1]
Division of New Drug Chemistry I.[4]
Division of New Drug Chemistry II.[1]
Division of New Drug Chemistry III.[8]
Office of Testing and Research[1]
Regulatory Research and Analysis Staff.
Laboratory of Clinical Pharmacology.[9]
Division of Applied Pharmacology Research.[10]
Division of Testing and Applied Analytical Development.[11]
Division of Product Quality Research.[1]
Office of Regulatory Affairs[12]
Contaminants Policy Coordination Staff.
Equal Employment Opportunity Staff.
Strategic Initiatives Staff.
Office of Resource Management
Division of Planning, Evaluation, and Management.
Division of Information Systems.
Division of Human Resource Development.
Division of Management Operations.
Office of Enforcement
Medical Products Quality Assurance Staff.
Division of Compliance Management and Operations.
Division of Compliance Policy.
Office of Regional Operations
Division of Federal-State Relations.
Division of Field Science.
Division of Emergency and Investigational Operations.
Division of Import Operations and Policy.
Office of Criminal Investigations[13]
Northeast Regional Office.[14]
Pacific Area Office.[15]
Southeast Regional Office.[16]
Southwest Regional Office.[17]
Central Regional Office.[18]
National Center for Toxicological Research.[19]
Office of the Center Director
Environmental Health and Program Assurance Staff.
Equal Employment Opportunity Staff.
Scientific Coordination Staff.
Technology Advancement Staff.
Office of Planning and Resource Management
Planning Staff.
Evaluation Staff.
Financial Management Staff.
Office of Research
Research Coordination Staff.
Biomarkers Laboratory Staff.
Division of Reproductive and Developmental Toxicology.
Division of Genetic Toxicology.
Division of Biochemical Toxicology.
Division of Nutritional Toxicology.
Division of Biometry and Risk Assessment.
Division of Chemistry.
Division of Microbiology.
Division of Neurotoxicology.
Office of Research Support
Veterinary Services Staff.
Information Technology Staff.
Division of Facilities Engineering and Maintenance.
Division of Administrative Services.
Center for Veterinary Medicine.[20]
Office of the Center Director
Office of Management and Communications
Administrative Staff.
Communications Staff.
Program Planning and Evaluation Staff.
Information Resources Management Staff.
Office of New Animal Drug Evaluation
Division of Therapeutic Drugs for Food Animals.
Division of Biometrics and Production Drugs.
Division of Therapeutic Drugs for Non-Food Animals.
Division of Human Food Safety.
Division of Manufacturing Technologies.
Office of Surveillance and Compliance
Division of Epidemiology and Surveillance.
Division of Animal Feeds.
Division of Compliance.
Office of Research
Administrative Staff.
Division of Residue Chemistry.
Division of Animal Research.
Center for Devices and Radiological Health.[21]
Office of the Center Director
Equal Employment Opportunity Staff.
Office of Systems and Management
Integrity, Committee and Conference Management Staff.
Division of Management Operations.
Financial Resources Staff.
Division of Information Dissemination.
Division of Information Technology Management.
Division of Planning, Analysis and Finance.
Office of Compliance[21]
Promotion and Advertising Policy Staff.
Division of Program Operations.
Division of Bioresearch Monitoring.
Division of Enforcement I.
Division of Enforcement II.
Division of Enforcement III.
Office of Device Evaluation
Program Operations Staff.
Program Management Staff.
Division of Cardiovascular, Respiratory, and Neurological Devices.
Division of Reproductive, Abdominal, Ear, Nose, and Throat, and Radiological Devices.
Division of General and Restorative Devices.
Division of Clinical Laboratory Devices.
Division of Ophthalmic Devices.
Division of Dental, Infection Control, and General Hospital Devices.
Office of Science and Technology
Division of Mechanics and Materials Science.
Division of Life Sciences.
Division of Physical Sciences.
Division of Electronics and Computer Sciences.
Division of Management, Information, and Support Services.
Office of Health and Industry Programs
Program Operations Staff.
Division of Device User Program and Systems Analysis.
Division of Small Manufacturers Assistance.
Division of Mammography Quality and Radiation Programs.
Division of Communication Media.
Office of Surveillance and Biometrics
Division of Biostatistics.
Division of Postmarket Surveillance.
Division of Surveillance Systems.
Office of Orphan Products Development.[1]
Office of Science.
Office of External Affairs.[1]
Industry and Small Business Liaison Staff.
Medwatch Staff.
Office of Public Affairs
Press Relations Staff.
Communications Staff.
Freedom of Information Staff.
Speechwriting Staff.
Management Staff.
Broadcast Media Staff.

[7] Mailing address: 7500 Standish Pl., Rockville, MD 20855
[8] Mailing address: 9201 Corporate Blvd., Rockville, MD 20850
[9] Mailing address: Four Research Ct., Rockville, MD 20850
[10] Mailing address: 8301 Muirkird Rd., Rockville, MD 20708
[11] Mailing address: 1114 Market St., St. Louis, MO 63101
[12] Mailing address: 5600 Fishers Lane, Rockville, MD 20857
[13] Mailing address: 7500 Standish Pl., rm. 250N, Rockville, MD 20855.
[14] Mailing address: 850 Third Ave., Brooklyn, NY 11232.
[15] Mailing address: 13301 Clay St., Oakland, CA 94512.
[16] Mailing address: 60 Eighth St. NE., Atlanta, GA 30309.
[17] Mailing address: 7920 Elmbrook Rd., Dallas, TX 75247.
[18] Mailing address: 900 U.S. Customhouse, Second Chestnut St., Philadelphia, PA 19106.
[19] Mailing address: Jefferson, AR 72079–9502.
[20] Mailing address: 7500 Standish Pl., MPN–2, Rockville MD 20855
[21] Mailing address: 9200 Corporate Blvd., Rockville, MD 20850

Office of Health Affairs
Medicine Staff.
Health Assessment Policy Staff.
Office of Legislative Affairs
Congressional Affairs Staff I.
Congressional Affairs Staff II.
Special Projects Staff.
Office of Consumer Affairs
Office of AIDS and Special Health Issues
Office of Women's Health
Office of International Affairs
Office of Management and Systems
Operations Coordination Staff.
Executive Management Staff.
Office of Planning and Evaluation
Planning and Management Communications Staff.
Evaluation and Analysis Staff.
Economics Staff.
Office of Information Resources Management
Planning Resources and Information Systems Management Staff.
Administrative Management Staff.
Division of Information Services and Policy.
Division of Operations and Technology Services.
Division of Software Engineering Services.
Division of Facilities Telecommunications and Planning Support.
Office of Financial Management
Division of Financial Systems.
Division of Accounting.
Division of Budget Formulation.
Office of Human Resources and Management Services
Division of Personnel Operations I.
Division of Personnel Operations II.
Division of Employee and Labor Management Relations.
Division of Recruitment and Staffing.
Division of Compensation Benefits and Training.
Division of Management Systems and Policy.
Division of Personnel Operations III.
Office of Facilities, Acquisitions and Central Services [22]
Policy Evaluation and Support Staff.
Division of Contracts and Procurement Management.
Division of Construction and Facilities Support Contracting.
Division of Central Services.
Division of Real Property Management.
Project Analysis and Evaluation Staff.
Division of Facilities Planning, Engineering and Safety.
Facilities Planning Staff.
FDA Safety Staff.
Office of Policy
Regulations Policy and Management Staff.
Policy Development and Coordination Staff.
Policy Research Staff.
International Policy Staff.

[22] Mailing address: 12420 Parklawn Dr., Rockville, MD 20857

3. Section 5.210 is revised to read as follows:

§ 5.210 FDA Public Information Offices.

(a) *Dockets Management Branch (HFA–305).* The Dockets Management Branch Public Room is located in rm. 1–23, 12420 Parklawn Dr., Rockville, MD 20857. Telephone: 301–443–1753.

(b) *Freedom of Information Staff (HFI–35).* The Freedom of Information Public Room is located in rm. 12A–30, Parklawn Bldg., 5600 Fishers Lane, Rockville, MD 20857. Telephone: 301–827–6500

(c) *Press Relations Staff (HFI–40).* The Press Offices are located in rm. 15A–07, Parklawn Bldg., 5600 Fishers Lane, Rockville, MD 20857. Telephone: 301–827–6242; and in rm. 3807, FB–8, 200 C St. SW., Washington, DC 20204. Telephone 202–245–1141.

4. Section 5.215 is revised to read as follows:

§ 5.215 Field structure.

NORTHEAST REGION

Regional Field Office: 850 Third Ave., Brooklyn, NY 11232.
Northeast Regional Laboratory: 850 Third Ave., Brooklyn , NY 11232–1593.
New York District Office: 850 Third Ave., Brooklyn, NY 11232–1593.
New England District Office: One Montvale Ave., Stoneham, MA 02180.
Buffalo District Office: Olympic Towers, 300 Pearl St., Buffalo, NY 14202.

CENTRAL REGION

Regional Field Office: U.S. Customhouse, Second and Chestnut Sts., rm. 900, Philadelphia, PA 19106.
Baltimore District Office: 900 Madison Ave., Baltimore, MD 21201–2199.
Cincinnati District Office: 1141 Central Pkwy., Cincinnati, OH 45202–1097.
New Jersey District Office: Waterview Corporate Center, 10 Waterview Blvd., 3d Floor, Parsippany, NJ 07054.
Philadelphia District Office: U.S. Customhouse, Second and Chestnut Sts., rm. 900, Philadelphia, PA 19106.
Chicago District Office: 300 South Riverside Plaza, suite 550, South Chicago, IL 60606.
Detroit District Office: 1560 East Jefferson Ave., Detroit, MI 48207–3179.
Minneapolis District Office: 240 Hennepin Ave., Minneapolis, MN 55401–1912.

SOUTHEAST REGION

Regional Field Office: 60 Eighth St. NE., Atlanta, GA 30309.
Southeast Regional Laboratory: 60 Eighth St. NE., Atlanta, GA 30309.
Atlanta District Office: 60 Eighth St. NE., Atlanta, GA 30309.
Nashville District Office: 297 Plus Park Blvd., Nashville, TN 37217.
New Orleans District Office: 4298 Elysian Fields Ave., New Orleans, LA 70122.
Florida District Office: 555 Winderley Pl., suite 200., Maitland, FL 32751.
San Juan District Office: 466 Fernandez Juncos Ave., San Juan, PR 00901–3223.

SOUTHWEST REGION

Regional Field Office: 7920 Elmbrook Rd., Dallas, TX 75247–4982.
Dallas District Office: 3310 Live Oak St., Dallas, TX 75204.
Denver District Office: Bldg. 20, Denver Federal Center, Sixth and Kipling Sts., P.O. Box 25087, Denver, CO 80225–0087.
Kansas City District Office: 11630 West 80th St., Lenexa, KS 66214.
St. Louis Branch: 12 Sunnen Dr., St. Louis, MO 63143.

PACIFIC REGION

Regional Field Office: 1301 Clay St., suite 1180–N, Oakland, CA 94612–5217.
San Francisco District Office: 1431 Harbor Bay Pkwy., Alameda, CA 94502–7070.
Los Angeles District Office: 19900 MacArthur Blvd., suite 300, Irvine, CA 92612–2445.
Seattle District Office: 22201 23d Dr. SE., Bothell, WA 98021–4421.

Dated: April 8, 1998.

William K. Hubbard,

Associate Commissioner for Policy Coordination.

[FR Doc. 98–9865 Filed 4–14–98; 8:45 am]

BILLING CODE 4160–01–F

PENSION BENEFIT GUARANTY CORPORATION

29 CFR Part 4044

Allocation of Assets in Single-Employer Plans; Interest Assumptions for Valuing Benefits

AGENCY: Pension Benefit Guaranty Corporation.

ACTION: Final rule.

SUMMARY: The Pension Benefit Guaranty Corporation's regulation on Allocation of Assets in Single-Employer Plans prescribes interest assumptions for valuing benefits under terminating single-employer plans. This final rule amends the regulation to adopt interest assumptions for plans with valuation dates in May 1998.

EFFECTIVE DATE: May 1, 1998.

FOR FURTHER INFORMATION CONTACT: Harold J. Ashner, Assistant General

Counsel, Office of the General Counsel, Pension Benefit Guaranty Corporation, 1200 K Street, NW., Washington, DC 20005, 202–326–4024. (For TTY/TDD users, call the Federal relay service toll-free at 1–800–877–8339 and ask to be connected to 202–326–4024.)

SUPPLEMENTARY INFORMATION: The PBGC's regulation on Allocation of Assets in Single-Employer Plans (29 CFR part 4044) prescribes actuarial assumptions for valuing plan benefits of terminating single-employer plans covered by title IV of the Employee Retirement Income Security Act of 1974.

Among the actuarial assumptions prescribed in part 4044 are interest assumptions. These interest assumptions are intended to reflect current conditions in the financial and annuity markets.

Two sets of interest assumptions are prescribed, one set for the valuation of benefits to be paid as annuities and one set for the valuation of benefits to be paid as lump sums. This amendment adds to appendix B to part 4044 the annuity and lump sum interest assumptions for valuing benefits in plans with valuation dates during May 1998.

For annuity benefits, the interest assumptions will be 5.60 percent for the first 25 years following the valuation date and 5.25 percent thereafter. The annuity interest assumptions represent an increase (from those in effect for April 1998) of 0.10 percent for the first 25 years following the valuation date and are otherwise unchanged. For benefits to be paid as lump sums, the interest assumptions to be used by the PBGC will be 4.25 percent for the period during which a benefit is in pay status and 4.00 percent during any years preceding the benefit's placement in pay status. The lump sum interest assumptions are unchanged from those in effect for April 1998.

The PBGC has determined that notice and public comment on this amendment are impracticable and contrary to the public interest. This finding is based on the need to determine and issue new interest assumptions promptly so that the assumptions can reflect, as accurately as possible, current market conditions.

Because of the need to provide immediate guidance for the valuation of benefits in plans with valuation dates during May 1998, the PBGC finds that good cause exists for making the assumptions set forth in this amendment effective less than 30 days after publication.

The PBGC has determined that this action is not a ''significant regulatory action'' under the criteria set forth in Executive Order 12866.

Because no general notice of proposed rulemaking is required for this amendment, the Regulatory Flexibility Act of 1980 does not apply. See 5 U.S.C. 601(2).

List of Subjects in 29 CFR Part 4044

Pension insurance, Pensions.

In consideration of the foregoing, 29 CFR part 4044 is amended as follows:

PART 4044—ALLOCATION OF ASSETS IN SINGLE-EMPLOYER PLANS

1. The authority citation for part 4044 continues to read as follows:

Authority: 29 U.S.C. 1301(a), 1302(b)(3), 1341, 1344, 1362.

2. In appendix B, a new entry is added to Table I, and Rate Set 55 is added to Table II, as set forth below. The introductory text of each table is republished for the convenience of the reader and remains unchanged.

Appendix B to Part 4044—Interest Rates Used to Value Annuities and Lump Sums

TABLE I.—ANNUITY VALUATIONS

[This table sets forth, for each indicated calendar month, the interest rates (denoted by i_1, i_2, . . ., and referred to generally as i_t) assumed to be in effect between specified anniversaries of a valuation date that occurs within that calendar month; those anniversaries are specified in the columns adjacent to the rates. The last listed rate is assumed to be in effect after the last listed anniversary date.]

For valuation dates occurring in the month—	The values of i_t are:					
	i_t	for t =	i_t	for t =	i_t	for t =
* * *	*		*		*	*
May 1998	.0560	1–25	.0525	>25	N/A	N/A

TABLE II.—LUMP SUM VALUATIONS

[In using this table: (1) For benefits for which the participant or beneficiary is entitled to be in pay status on the valuation date, the immediate annuity rate shall apply; (2) For benefits for which the deferral period is y years (where y is an integer and $0 < y \leq n_1$), interest rate i_1 shall apply from the valuation date for a period of y years, and thereafter the immediate annuity rate shall apply; (3) For benefits for which the deferral period is y years (where y is an integer and $n_1 < y \leq n_1 + n_2$), interest rate i_2 shall apply from the valuation date for a period of $y—n_1$ years, interest rate i_1 shall apply for the following n_1 years, and thereafter the immediate annuity rate shall apply; (4) For benefits for which the deferral period is y years (where y is an integer and $y > n_1 + n_2$), interest rate i_3 shall apply from the valuation date for a period of $y—n_1—n_2$ years, interest rate i_2 shall apply for the following n_2 years, interest rate i_1 shall apply for the following n_1 years, and thereafter the immediate annuity rate shall apply.]

Rate set	For plans with a valuation date		Immediate annuity rate (percent)	Deferred annuities (percent)				
	On or after	Before		i_1	i_2	i_3	n_1	n_2
*	*		*	*	*	*		*
55	05–1–98	06–1–98	4.25	4.00	4.00	4.00	7	8

Issued in Washington, D.C., on this 8th day of April 1998.

David M. Strauss,

Executive Director, Pension Benefit Guaranty Corporation.

[FR Doc. 98–9748 Filed 4–14–98; 8:45 am]

BILLING CODE 7708–01–P

DEPARTMENT OF TRANSPORTATION

Coast Guard

33 CFR Part 117

[CGD01–97–124]

RIN 2115–AE47

Drawbridge Operation Regulations: Presumpscot River, ME

AGENCY: Coast Guard, DOT.

ACTION: Final rule.

SUMMARY: The Coast Guard is removing the operating rules for the US1 highway bridge at Martin Point, mile 0.0, over the Presumpscot River between Portland and Falmouth, Maine. The US1 highway bridge was replaced by a fixed span bridge in 1985, and the regulations are no longer applicable. Notice and public procedure have been omitted from this action because the bridge the regulations formerly governed no longer exists.

DATES: This final rule is effective April 15, 1998.

ADDRESSES: Documents as indicated in this preamble are available for inspection or copying at the First Coast Guard District Office, 408 Atlantic Avenue, Boston, Massachusetts, 02110, 7 a.m. to 3 p.m. Monday through Friday, except Federal holidays. The telephone number is (617) 223–8364.

FOR FURTHER INFORMATION CONTACT: John W. McDonald, Project Officer, First Coast Guard District, (617) 223–8364.

SUPPLEMENTARY INFORMATION:

Backround

The US1 highway bridge at Martin Point was replaced by a new fixed span bridge in 1985. The old highway bridge has been removed.

The Coast Guard has determined that good cause exists under the Administrative procedure Act (5 U.S.C. 553) to forego notice and comment for this rulemaking because notice and comment are unnecessary. Notice and comment are unnecessary because the bridge the regulations governed no longer exists.

The Coast Guard, for the reason just stated, has also determined that good cause exists for this rule to become effective upon publication in the **Federal Register**.

Regulatory Evaluation

This rule is not a significant regulatory action under section 3(f) of Executive Order 12866 and does not require an assessment of potential costs and benefits under section 6(a)(3) of that Order. It has not been reviewed by the Office of Management and Budget under that Order. It is not significant under the regulatory policies and procedures of the Department of Transportation (DOT) (44 FR 11040; February 26, 1979). The Coast Guard expects the economic impact of this rule to be so minimal that a full Regulatory Evaluation under paragraph 10e of the regulatory policies and procedures of DOT is unnecessary. This conclusion is based on the fact that the bridge has been removed and the regulations for the bridge are no longer needed.

Small Entities

Under the Regulatory Flexibility Act (5 U.S.C. 601 *et seq.*), the Coast Guard considered whether this final rule will have a significant economic impact on a substantial number of small entities. ''Small entities'' include small businesses, not-for profit organizations that are independently owned and operated and are not dominant in their fields, and governmental jurisdictions with populations less than 50,000. Therefore, for the reasons discussed in the Regulatory Evaluation section above, the Coast Guard certifies under section 605(b) of the Regulatory Flexibility Act (5 U.S.C. 601 *et seq.*) that this final rule will not have a significant economic impact on a substantial number of small entities.

Collection of Information

This final rule does not provide for a collection of information under the Paperwork Reduction Act of 1995 (44 U.S.C. 3501 *et seq.*).

Federalism

The Coast Guard has analyzed this final rule in accordance with the principles and criteria contained in Executive Order 12612 and has determined that this rule does not have sufficient federalism implications to warrant the preparation of a Federalism Assessment.

Environment

The Coast Guard considered the environmental impact of this rule and concluded that, under section 2.B.2.e. (34) of Commandant Instruction M16475.1B, as amended by 59 FR 38655, July 29, 1994, this final rule is categorically excluded from further environmental documentation. A ''Categorical Exclusion Determination'' is available in the docket for inspection or copying where indicated under **ADDRESSES**.

List of Subjects in 33 CFR Part 117

Bridges.

Regulations

For the reasons set out in the preamble, the Coast Guard amends 33 CFR part 117 as follows:

PART 117—DRAWBRIDGE OPERATION REGULATIONS

1. The authority citation for part 117 continues to read as follows:

Authority: 33 U.S.C. 499; 49 CFR 1.46; 33 CFR 1.05–1(g); section 117.255 also issued under the authority of Pub. L. 102–587, 106 Stat. 5039.

§ 117.532 [Removed]

2. Section 117.532 is removed.

Dated: March 16, 1998.

James D. Garrison,

Captain, U.S. Coast Guard, Acting Commander, First Coast Guard District.

[FR Doc. 98–9923 Filed 4–14–98; 8:45 am]

BILLING CODE 4910–15–M

DEPARTMENT OF TRANSPORTATION

Coast Guard

33 CFR Part 117

[CGD01–97–127]

RIN 2115–AE47

Drawbridge Operation Regulations: Fore River, ME

AGENCY: Coast Guard, DOT.

ACTION: Final rule.

SUMMARY: The Coast Guard is removing the operating rules for the I–295 Million Dollar Bridge over the Fore River, mile 3.4, between Portland and South Portland, Maine. The I–295 Million Dollar Bridge was replaced by a new bridge in 1996, and the regulations for the I–295 Bridge are no longer necessary. Notice and public procedure have been omitted from this action

because the bridge the regulations formerly governed no longer exists.

DATES: This final rule is effective April 15, 1998.

ADDRESSES: Documents as indicated in this preamble are available for inspection or copying at the First Coast Guard District Office, 408 Atlantic Avenue, Boston, Massachusetts 02110, 7 a.m. to 3 p.m., Monday through Friday, except Federal holidays. The telephone number is (617) 223–8364.

FOR FURTHER INFORMATION CONTACT: John W. McDonald, Project Officer, First Coast Guard District, (617) 223–8364.

SUPPLEMENTARY INFORMATION:

Background

The I–295 Million Dollar Bridge was replaced by a new bridge in 1996. The old bridge has been removed.

The Coast Guard has determined that good cause exists under the Administrative Procedure Act (5 U.S.C. 553) to forego notice and comment for this rulemaking because notice and comment are unnecessary. Notice and comment are unnecessary because the bridge the regulations governed no longer exists.

The Coast Guard, for the just stated, has also determined that good cause exists for this rule to be effective upon publication in the **Federal Register**.

Regulatory Evaluation

This final rule is not a significant regulatory action under section 3(f) of Executive Order 12866 and does not require an assessment of potential costs and benefits under section 6(a)(3) of that Order. It has not been reviewed by the Office of Management and Budget under that Order. It is not significant under the regulatory policies and procedures of the Department of Transportation (DOT) (44 FR 11040; February 26, 1979). The Coast Guard expects the economic impact of this final rule to be so minimal that a full Regulatory Evaluation under paragraph 10e of the regulatory policies and procedures of DOT is unnecessary. This conclusion is based on the fact that the bridge has been removed and the regulations for said bridge are no longer needed.

Small Entities

Under the Regulatory Flexibility Act (5 U.S.C. 601 *et seq.*), the Coast Guard considered whether this final rule will have a significant economic impact on a substantial number of small entities. ''Small entities'' include small businesses, not-for-profit organizations that are independently owned and operated and are not dominant in their fields, and governmental jurisdictions with populations less than 50,000. Therefore, for the reasons discussed in the Regulatory Evaluation section above, the Coast Guard certifies under section 605(b) of the Regulatory Flexibility Act (4 U.S.C. 601 *et seq.*), that this final rule will not have a significant economic impact on a substantial number of small entities.

Collection of Information

This final rule does not provide for a collection of information under the Paperwork Reduction Act of 1995 (44 U.S.C. 3501 *et seq.*).

Federalism

The Coast Guard has analyzed this final rule in accordance with the principles and criteria contained in Executive Order 12612 and has determined that this rule does not have sufficient federalism implication to warrant the preparation of a Federalism Assessment.

Environment

The Coast Guard considered the environmental impact of this final rule and concluded that, under section 2.B.2.e. (34) of Commandant Instruction M16475.1B, as amended by 59 FR 38655, July 29, 1994, this final rule is categorically excluded from further environmental documentation. A ''Categorical Exclusion Determination'' is available in the docket for inspection or copying where indicated under **ADDRESSES**.

List of Subjects in 33 CFR Part 117

Bridges.

Regulations

For the reasons set out in the preamble, the Coast Guard amends 33 CFR part 117 as follows:

PART 117—DRAWBRIDGE OPERATION REGULATIONS

1. The authority citation for part 117 continues to read as follows:

Authority: 33 U.S.C. 499; 49 CFR 1.46; 33 CFR 1.05–1(g); section 117.255 also issued under the authority of Pub. L. 102–587, 106 Stat. 5039.

§ 117.524 [Removed]

2. Section 117.524 is removed.

Dated: March 16, 1998.

James D. Garrison,

Captain, U.S. Coast Guard, Acting Commander, First Coast Guard District.

[FR Doc. 98–9924 Filed 4–14–98; 8:45 am]

BILLING CODE 4910–15–M

DEPARTMENT OF TRANSPORTATION

Coast Guard

33 CFR Part 117

[CGD01–97–125]

RIN 2115–AE47

Drawbridge Operation Regulations: Hutchinson River, NY

AGENCY: Coast Guard, DOT.

ACTION: Final rule.

SUMMARY: The Coast Guard is removing the operating rules for the I–95 bridge at New York City, mile 2.2, over the Hutchinson River. The Coast is removing the operating regulations for the I–95 highway bridge because it was replaced by a fixed span in 1996. Notice and public procedures have been omitted from this action because the bridge the regulations formerly governed no longer exists.

DATES: This final rule is effective April 15, 1998.

ADDRESSES: Documents as indicated in this preamble are available for inspection or copying at the First Coast Guard District Office, 408 Atlantic Avenue, Boston, Massachusetts, 02110, 7 a.m. to 3 p.m., Monday through Friday, except Federal holidays. The telephone number is (617) 223–8364.

FOR FURTHER INFORMATION CONTACT: John W. McDonald, Project Officer, First Coast Guard District, (617) 223–8364.

SUPPLEMENTARY INFORMATION:

Background

The I–95 Bridge was replaced by a new fixed span bridge in 1996. The old bridge has been removed.

The Coast Guard has determined that good cause exists under the Administrative Procedure Act (5 U.S.C. 553) to forego notice and comment for this rulemaking because notice and comment are unnecessary. Notice and comment are unnecessary because the bridge the regulations governed no longer exists.

The Coast Guard, for the reason just stated, has also determined that good cause exists for this rule to be effective upon publication in the **Federal Register**.

Regulatory Evaluation

This final rule is not a significant regulatory action under section 3(f) of Executive Order 12866 and does not require an assessment of potential costs and benefits under section 6(a)(3) of that Order. It has not been reviewed by the Office of Management and Budget under that Order. It is not significant under the

regulatory policies and procedures of the Department of Transportation (DOT) (44 FR 11040; February 26, 1979). The Coast Guard expects the economic impact of this rule to be so minimal that a full Regulatory Evaluation under paragraph 10e of the regulatory policies and procedures of DOT is unnecessary. This conclusion is based on the fact that the bridge in question has been removed and the regulations for said bridge are no longer needed.

Small Entities

Under the Regulatory Flexibility Act (5 U.S.C. 601 *et seq.*), the Coast Guard considered whether this final rule will have a significant economic impact on a substantial number of small entities. ''Small entities'' include small businesses, not-for profit organizations that are independently owned and operated and are not dominant in their fields, and governmental jurisdictions with populations less than 50,000. Therefore, for the reasons discussed in the Regulatory Evaluation section above, the Coast Guard certifies under section 605(b) of the Regulatory Flexibility Act (5 U.S.C. 601 *et seq.*), that this rule will not have a significant economic impact on a substantial number of small entities.

Collection of Information

This final rule does not provide for a collection of information under the Paperwork Reduction Act of 1995 (44 U.S.C. 3501 *et seq.*).

Federalism

The Coast Guard has analyzed this final rule in accordance with the principles and criteria contained in Executive Order 12612 and has determined that this rule does not have sufficient federalism implications to warrant the preparation of a Federalism Assessment.

Environment

The Coast Guard considered the environmental impact of this final rule and concluded that, under section 2.B.2.e. (34) of Commandant Instruction M16475.1B, as amended by 59 FR 38655, July 29 1994, this final rule is categorically excluded from further environmental documentation. A ''Categorical Exclusion Determination'' is available in the docket for inspection or copying where indicated under **ADDRESSES.**

List of Subjects in 33 CFR Part 117

Bridges.

Regulations

For the reasons set out in the preamble, the Coast Guard amends 33 CFR part 117 as follows:

PART 117—DRAWBRIDGE OPERATION REGULATIONS

1. The authority citation for part 117 continues to read as follows:

Authority: 33 U.S.C. 499; 49 CFR 1.46; 33 CFR 1.05–1(g); section 117.255 also issued under the authority of Pub. L. 102–587, 106 Stat. 5039.

2. In § 117.793 paragraph (b) is revised to read as follows:

§ 117.793 Hutchinson River (Eastchester Creek).

* * * * *

(b) The draw of the Hutchinson River Parkway Bridge, mile 0.9, shall open on signal if at least six hours notice is given.

* * * * *

Dated: March 16, 1998.

James D. Garrison,

Captain U.S. Coast Guard, Acting Commander, First Coast Guard District.

[FR Doc. 98–9925 Filed 4–14–98; 8:45 am]

BILLING CODE 4910–15–M

DEPARTMENT OF TRANSPORTATION

Coast Guard

33 CFR Part 117

[CGD01–98–013]

RIN 2115–AE47

Drawbridge Operation Regulations: Richmond Creek, NY

AGENCY: Coast Guard, DOT.

ACTION: Final rule.

SUMMARY: The Coast Guard is removing the operating rules for the Richmond Avenue Bridge, mile 2.0, at New York City. The Richmond Avenue Bridge has been replaced by a new fixed bridge. Notice and public procedure have been omitted from this action because the bridge the regulations formerly governed no longer exists.

DATES: This final rule is effective April 15, 1998.

ADDRESSES: Documents as indicated in this preamble are available for inspection or copying at the First Coast Guard District Office, 408 Atlantic Avenue, Boston, Massachusetts, 02210, 7 a.m. to 3 p.m., Monday through Friday, except Federal holidays. The telephone number is (617) 223–8364.

FOR FURTHER INFORMATION CONTACT: John W. McDonald, Project Officer, First Coast Guard District, (617) 223–8364.

SUPPLEMENTARY INFORMATION:

Background

The Richmond Avenue Bridge has been removed and replaced by a new fixed bridge.

The Coast Guard has determined that good cause exists under the Administrative Procedure Act (5 U.S.C. 553) to forego notice and comment for this rulemaking because notice and comment are unnecessary. Notice and comment are unnecessary because the bridge the regulations governed no longer exists.

The Coast Guard, for reasons just stated, has also determined that good cause exists for this rule to be effective upon publication in the **Federal Register**.

Regulatory Evaluation

This final rule is not a significant regulatory action under section 3(f) of Executive Order 12866 and does not require an assessment of potential costs and benefits under section 6(a)(3) of that Order. It has not been reviewed by the Office of Management and Budget under that Order. It is not significant under the regulatory policies and procedures of the Department of Transportation (DOT) (44 FR 11040; February 26, 1979). The Coast Guard expects the economic impact of this rule to be so minimal that a full Regulatory Evaluation under paragraph 10e of the regulatory policies and procedures of DOT is unnecessary. This conclusion is based on the fact that the bridge has been removed and the regulations for the bridge are no longer needed.

Small Entities

Under the Regulatory Flexibility Act (5 U.S.C. 601 *et seq.*), the Coast Guard considered whether this final rule will have a significant economic impact on a substantial number of small entities. ''Small entities'' include small businesses, not-for profit organizations that are independently owned and operated and are not dominant in their fields, and governmental jurisdictions with populations less than 50,000. Therefore, for the reasons discussed in the Regulatory Evaluation section above, the Coast Guard certifies under section 605(b) of the Regulatory Flexibility Act (5 U.S.C. 601 *et seq.*,), that this final rule will not have a significant economic impact on a substantial number of small entities.

Collection of Information

This final rule does not provide for a collection of information under the Paperwork Reduction Act of 1995 (44 U.S.C. 3501 *et seq.*).

Federalism

The Coast Guard has analyzed this final rule in accordance with the principles and criteria contained in Executive Order 12612 and has determined that this rule does not have sufficient federalism implications to warrant the preparation of a Federalism Assessment.

Environment

The Coast Guard considered the environmental impact of this final rule and concluded that, under section 2.B.2.e.(34) of Commandant Instruction M16475.1B, as amended by 59 FR 38655, July 29, 1994, this final rule is categorically excluded from further environmental documentation. A ''Categorical Exclusion Determination'' is available in the docket for inspection or copying where indicated under **ADDRESSES.**

List of Subjects in 33 CFR Part 117

Bridges.

Regulations

For the reasons set out in the preamble, the Coast Guard amends 33 CFR part 117 as follows:

PART 117—DRAWBRIDGE OPERATION REGULATIONS

1. The authority citation for part 117 continues to read as follows:

Authority: 33 U.S.C. 499; 49 CFR 1.46; 33 CFR 1.05–1(g); section 117.255 also issued under the authority of Pub. L. 102–587, 106 Stat. 5039.

§ 117.807 [Amended]

2. Section 117.807 is removed.

Dated: March 16, 1998.

James D. Garrison,

Captain, U.S. Coast Guard, Acting Commander, First Coast Guard District.

[FR Doc. 98–9926 Filed 4–14–98; 8:45 am]

BILLING CODE 4910–15–M

DEPARTMENT OF TRANSPORTATION

Coast Guard

33 CFR Part 117

[CGD01–97–126]

RIN 2115–AE47

Drawbridge Operation Regulations: North River, MA

AGENCY: Coast Guard, DOT.

ACTION: Final rule.

SUMMARY: The Coast Guard is removing the operating rules for the S3A Bridge, mile 1.6, at Scituate, Massachusetts. The S3A Bridge was removed in 1995, and replaced by a temporary bridge; therefore, the regulations for the S3A Bridge are no longer necessary. Notice and public procedure have been omitted from this action because the bridge the regulations formerly governed no longer exits.

DATES: This final rule is effective April 15, 1998.

ADDRESSES: Documents as indicated in this preamble are available for inspection or coping at the First Coast Guard District Office, 408 Atlantic Avenue, Boston, Massachusetts, 02210, 7 a.m. to 3 p.m., Monday through Friday, except Federal holidays. The telephone number is (617) 223–8364.

FOR FURTHER INFORMATION CONTACT:

John W. McDonald, Project Officer, First Coast Guard District, (617) 223–8364.

SUPPLEMENTARY INFORMATION:

Background

The S3A Bridge has been removed and replaced by a temporary bridge. A new fixed span bridge will be constructed on the original alignment of the S3A Bridge.

The Coast Guard has determined that good cause exists under the Administrative Procedure Act (5 U.S.C. 553) to forego notice and comment for this rulemaking because notice and comment are unnecessary. Notice and comment are unnecessary because the bridge the regulations governed no longer exists.

The Coast Guard, for reasons just stated, has also determined that good cause exists for this final rule to be effective upon publication in the **Federal Register**.

Regulatory Evaluation

This final rule is not a significant regulatory action under section 3(f) of Executive Order 12866 and does not require an assessment of potential costs and benefits under section 6(a)(3) of that Order. It has not been reviewed by the Office of Management and Budget under that Order. It is not significant under the regulatory policies and procedures of the Department of Transportation (DOT) (44 FR 11040; February 26, 1979). The Coast Guard expects the economic impact of this rule to be so minimal that a full Regulatory Evaluation under paragraph 10e of the regulatory policies and procedures of DOT is unnecessary. This conclusion is based on the fact that the bridge has been removed and the regulations for the bridge are no longer needed.

Small Entities

Under the Regulatory Flexibility Act (5 U.S.C. 601 *et seq.*), the Coast Guard considered whether this final rule will have a significant economic impact on a substantial number of small entities. ''Small entities'' include small businesses, not-for profit organizations that are independently owned and operated and are not dominant in their fields, and governmental jurisdictions with populations less than 50,000. Therefore, for the reasons discussed in the Regulatory Evaluation section above, the Coast Guard certifies under section 605(b) of the Regulatory Flexibility Act (5 U.S.C. 601 *et seq.*), that this final rule will not have a significant economic impact on a substantial number of small entities.

Collection of Information

This final rule does not provide for a collection of information under the Paperwork Reduction Act of 1995 (44 U.S.C. 350 *et seq.*).

Federalism

The Coast Guard has analyzed this final rule in accordance with the principles and criteria contained in Executive Order 12612 and has determined that this rule does not have sufficient federalism implications to warrant the preparation of a Federalism Assessment.

Environment

The Coast Guard considered the environmental impact of this final rule and concluded that, under section 2.B.2.e (34) of Commandant Instruction M16475.1B, as amended by 59 FR 38655, July 29, 1994, this final rule is categorically excluded from further environmental documentation. A ''Categorical Exclusion Determination'' is available in the docket for inspection or copying where indicated under **ADDRESSES**.

List of Subjects in 33 CFR Part 117

Bridges.

Regulations

For the reasons set out in the preamble, the Coast Guard amends 33 CFR part 117 as follows:

PART 117—DRAWBRIDGE OPERATION REGULATIONS

1. The authority citation for part 117 continues to read as follows:

Authority: 33 U.S.C. 499; 49 CFR 1.46; 33 CFR 1.05–1(g); section 117.255 also issued under the authority of Pub. L. 102–587, 106 Stat. 5039.

2. Section 117.613 is revised to read as follows:

§ 117.613 North River.

The draw of the Plymouth County (Bridge Street) Bridge, mile 4.0, at Norwell, shall open on signal from May 1 through October 31 if at least four hours notice is given. From November 1 through April 30, the draw shall open on signal if at least 24 hours notice is given.

Dated: March 16, 1998.

James D. Garrison,

Captain, U.S. Coast Guard, Acting Commander, First Coast Guard District.

[FR Doc. 98–9927 Filed 4–14–98; 8:45 am]

BILLING CODE 4910–15–M

DEPARTMENT OF TRANSPORTATION

Coast Guard

33 CFR Part 117

[CGD01–97–128]

RIN 2115–AE47

Drawbridge Operation Regulations: Sheepscot River, ME

AGENCY: Coast Guard, DOT.

ACTION: Final rule.

SUMMARY: The Coast Guard is removing the operating rules for the Maine Highway Bridge over the Sheepscot River, mile 14.0, between Wiscasset and North Edgecombe, Maine. The Maine Highway Bridge was replaced by a fixed span bridge in 1983, and the regulations are no longer applicable. Notice and public procedure have been omitted from this action because the bridge the regulations formerly governed no longer exists.

DATES: This final rule is effective on April 15, 1998.

ADDRESSES: Documents as indicated in this preamble are available for inspection or copying at the First Coast Guard District Office, 408 Atlantic Avenue, Boston, Massachusetts 02110, 7 a.m. to 3 p.m., Monday through Friday, except Federal holidays. The telephone number is (617) 223–8364.

FOR FURTHER INFORMATION CONTACT: John W. McDonald, Project Officer, First Coast Guard District, (617) 223–8364.

SUPPLEMENTARY INFORMATION:

Background

The Maine Highway Bridge was replaced by a new fixed span bridge in 1983, and the old bridge has been removed.

The Coast Guard has determined that good cause exists under the Administrative Procedure Act (5 U.S.C. 553) to forego notice and comment for this rulemaking because notice and comment are unnecessary. Notice and comment are unnecessary because the bridge the regulations governed no longer exists.

The Coast Guard, for the reason just stated, has also determined that good cause exists for this rule to be effective upon publication in the **Federal Register**.

Regulatory Evaluation

This rule is not a significant regulatory action under section 3(f) of Executive Order 12866 and does not require an assessment of potential costs and benefits under section 6(a)(3) of that Order. It has not been reviewed by the Office of Management and Budget under that Order. It is not significant under the regulatory policies and procedures of the Department of Transportation (DOT) (44 FR 11040; February 26, 1979). The Coast Guard expects the economic impact of this rule to be so minimal that a full Regulatory Evaluation under paragraph 10e of the regulatory policies and procedures of DOT is unnecessary. This conclusion is based on the fact that the bridge has been removed and the regulations for said bridge are no longer needed.

Small Entities

Under the Regulatory Flexibility Act (5 U.S.C. 601 *et seq.*), the Coast Guard considered whether this final rule will have a significant economic impact on a substantial number of small entities. ''Small entities'' include small businesses, not-for-profit organizations that are independently owned and operated and are not dominant in their fields, and governmental jurisdictions with populations less than 50,000. Therefore, for the reasons discussed in the Regulatory Evaluation section above, the Coast Guard certifies under section 605(b) of the Regulatory Flexibility Act (5 U.S.C. 601 *et seq.*) that this final rule will not have a significant economic impact on a substantial number of small entities.

Collection of Information

This final rule does not provide for a collection of information under the Paperwork Reduction Act of 1995 (44 U.S.C. 3501 *et seq.*).

Federalism

The Coast Guard has analyzed this final rule in accordance with the principles and criteria contained in Executive Order 12612 and has determined that this rule does not have sufficient federalism implications to warrant the preparation of a Federalism Assessment.

Environment

The Coast Guard considered the environmental impact of this rule and concluded that, under section 2.B.2.e.(34) of Commandant Instruction M16475.1B, as amended by 59 FR 38655, July 29, 1994, this rule is categorically excluded from further environmental documentation. A ''Categorical Exclusion Determination'' is available in the docket for inspection or copying where indicated under **ADDRESSES**.

List of Subjects in 33 CFR Part 117

Bridges.

Regulations

For the reasons set out in the preamble, the Coast Guard amends 33 CFR part 117 as follows:

PART 117—DRAWBRIDGE OPERATION REGULATIONS

1. The authority citation for part 117 continues to read as follows:

Authority: 33 U.S.C. 499; 49 CFR 1.46; 33 CFR 1.05–1(g); section 117.255 also issued under the authority of Pub. L. 102–587, 106 Stat. 5039.

2. Section 117.533 is revised as follows:

§ 117.533 Sheepscot River.

The draw of the Maine Central Railroad Bridge, mile 15.0, between Wiscasset and North Edgecombe, Maine, need not be opened for the passage of vessels. The draw of the Maine Central Railroad Bridge shall be returned to operable condition within six months after notification by the District Commander to do so.

Dated: March 16, 1998.

James D. Garrison,

Captain, U.S. Coast Guard, Acting Commander, First Coast Guard District.

[FR Doc. 98–9929 Filed 4–14–98; 8:45 am]

BILLING CODE 4910–15–M

ENVIRONMENTAL PROTECTION AGENCY

40 CFR Part 8

[FRL–5994–2]

Extension of Effective Date of Environmental Impact Assessment of Nongovernmental Activities in Antarctica

AGENCY: Environmental Protection Agency (EPA).

ACTION: Direct amendment to interim final rule.

SUMMARY: On April 30, 1997, the Environmental Protection Agency (EPA) promulgated a regulation on environmental impact assessment of nongovernmental activities in Antarctica under Public Law 104–227, the Antarctic Science, Tourism, and Conservation Act of 1996. The April 30, 1997, Interim Final Rule applies only to nongovernmental activities that may occur through the 1998–99 austral summer, to be replaced by a final rule. The EPA had planned to promulgate the final rule prior to October 2, 1998. However, representatives from the affected industry and environmental nongovernmental organizations (NGOs) have requested that EPA delay promulgation of the final rule for at least one year so that more experience with the Interim Final Rule can be considered in developing the final rule. After consultation with other Federal agencies which are involved with nongovernmental activities in Antarctica, EPA has determined that this request is reasonable and that additional time to develop the final rule will be beneficial. In order to delay promulgation of the final rule, EPA must amend the Interim Final Rule to extend its applicability through the 2000–2001 austral summer. Accordingly, EPA is promulgating this amendment to the Interim Final Rule as a direct amendment to interim final rule without prior proposal, because EPA views this as a noncontroversial action and anticipates no adverse comments.

DATES: Effective date: July 14, 1998 unless relevant adverse comments are received by June 15, 1998. If the effective date is delayed, timely notice will be published in the **Federal Register**.

ADDRESSES: Comments must be addressed to Mr. Joseph Montgomery or Ms. Katherine Biggs, Office of Federal Activities (2252A), U.S. Environmental Protection Agency, 401 M Street, S.W., Washington, D.C. 20460.

FOR FURTHER INFORMATION CONTACT: Mr. Joseph Montgomery or Ms. Katherine Biggs, Office of Federal Activities (2252A), U.S. Environmental Protection Agency, 401 M Street, S.W., Washington, D.C. 20460; telephone: (202) 564–7157 or (202) 564–7144, respectively.

SUPPLEMENTARY INFORMATION: The EPA is also proposing an identical amendment and soliciting comment on it in the **PROPOSED RULES** section of today's **Federal Register**. The accompanying notice of proposed rulemaking serves as the basis of a subsequent final rule if the time extension amendment in the direct amendment to interim final rule receives relevant adverse comment and the direct amendment to interim final rule does not take effect as described below. If relevant adverse comments are received on the direct amendment to interim final rule, then EPA will withdraw this direct amendment to interim final rule prior to its effective date, consider the comments received on it as comments on the identical amendment in the **PROPOSED RULES** section, and address these comments during this subsequent final rulemaking.

This direct amendment to interim final rule will become effective without further notice ninety (90) days from the date of today's **Federal Register** publication unless the EPA receives relevant adverse comment within sixty (60) days from the date of today's publication. For instructions on commenting to EPA, please see the **ADDRESSES** section and the **ADDRESSES** section of the corresponding proposed rule in the **PROPOSED RULES** section of today's **Federal Register**.

For additional information, see the proposed rule published in the **PROPOSED RULES** section of this **Federal Register**. For information on the direct amendment to interim final rulemaking process and associated proposed rulemaking, see the **SUMMARY** section of this document.

I. Executive Order Clearance

Under Executive Order 12866, (58 FR 51,735 (October 4, 1993)) the EPA must determine whether the regulatory action is ''significant'' and therefore subject to review by the Office of Management and Budget (OMB) and the requirements of the Executive Order. The Order defines ''significant regulatory action'' as one that is likely to result in a rule that may:

(1) Have an annual effect on the economy of $100 million or more or adversely affect in a material way the economy, a sector of the economy, productivity, competition, jobs, the environment, public health or safety, or State, local, or tribal governments or communities;

(2) Create a serious inconsistency or otherwise interfere with an action taken or planned by another agency;

(3) Materially alter the budgetary impact of entitlements, grants, user fees, or loan programs or the rights and obligations of recipients thereof; or

(4) Raise novel legal or policy issues arising out of legal mandates, the President's priorities, or the principles set forth in the Executive Order.

Pursuant to the terms of Executive Order 12866, EPA determined that the Interim Final Rule (62 FR 83, 23544 (April 30, 1997)) was a ''significant regulatory action.'' Although none of the first three criteria apply, the Interim Final Rule raised novel legal or policy issues arising out of legal mandates under P.L. 104–227, the Antarctic Science, Tourism, and Conservation Act of 1996 and the Protocol on Environmental Protection to the Antarctic Treaty of 1959. Accordingly, the Interim Final Rule was submitted to OMB for review. Changes were made in response to OMB recommendations. The EPA has determined, however, that this action to amend the effective date of the Interim Final Rule is not a ''significant regulatory action'' because the legal and policies issues raised are no longer novel and were considered previously by OMB and because the first three criteria still do not apply. Accordingly, this action was not submitted to OMB for review.

II. Regulatory Flexibility Act

The EPA determined that the Interim Final Rule issued April 30, 1997, was not subject to the Regulatory Flexibility Act (RFA), which generally requires an agency to prepare a regulatory flexibility analysis for any proposed and final rule, unless the agency certifies that the rule will not have a significant economic impact on a substantial number of small entities. By its terms, the RFA applies only to rules for which the Agency is required to conduct notice-and-comment rulemaking under the Administrative Procedure Act (APA) or any other statute. The Interim Final Rule was not subject to the RFA because EPA promulgated the rule invoking the ''good cause'' exemption provided in section 553(b) of the APA, 5 U.S.C. 553(b)(B), which removed the rule from the APA notice and comment requirements.

Today's regulation, although it does no more than extend the effective date of the Interim Final Rule, is not exempt from APA notice and comment requirements, and is, therefore, subject to the requirements of the Regulatory Flexibility Act. The Agency has carefully assessed the impact of this regulation on small entities, and has determined that it is appropriate to certify that it will not have a significant economic impact on a substantial number of small entities.

This determination is based on several factors. First, the total number of entities subject to the rule is small, probably no more than 10. However, the overwhelming majority of the affected entities will be small. Nevertheless, the

impact of the rule will be low because assessments are already done pursuant to the current rule. Further, because the Interim Final Rule, as extended today, only requires assessment of environmental impacts, it will not cause any revenue reductions. The only economic effects of the rule on small businesses will be limited primarily to the cost of preparing an assessment. As explained further below in the discussion of the Paperwork Reduction Act, these costs should have been relatively minor even for the first year's submission, which all operators completed. Further, EPA anticipates few, if any, new operators will enter the field, and that for existing operators submissions in succeeding years will be able to re-use or modify substantial portions of the first year's documentation, further reducing costs.

In addition, EPA has ensured the impact to small entities is minimized by drafting the Interim Final Rule such that the requirements it imposes are no greater than necessary to ensure that the United States will be in compliance with its international obligations under the Protocol and the Treaty. Finally, EPA has included a number of provisions, e.g., incorporation of information and consolidation of documentation, in the Interim Final Rule which should minimize the cost of such an analysis.

III. Unfunded Mandates Reform Act and Executive Order 12875

Title II of the Unfunded Mandates Reform Act of 1995 (UMRA), P.L. 104–4, establishes requirements for Federal agencies to assess the effects of their regulatory actions on state, local, and tribal governments and the private sector. The UMRA did not apply to the Interim Final Rule because it was necessary for the ratification and implementation of international treaty obligations. The Interim Final Rule was not subject to the requirements of sections 202 and 205 of the UMRA. In any event, EPA determined that the Interim Final Rule did not contain a Federal mandate that may result in annual expenditures of $100 million or more for state, local, and tribal governments, in the aggregate, or for the private sector. The EPA also determined that the Interim Final Rule contained no regulatory requirements that might significantly or uniquely affect small governments under section 203 of the UMRA. This action is merely an extension of the effective date of the Interim Final Rule and imposes no burdens that may result in annual expenditures of $100 million or more. The rule, as extended, also is not expected to impact small governments significantly or uniquely. Accordingly, the requirements of UMRA do not apply.

Executive Order 12875, Enhancing Intergovernmental Partnerships, likewise requires EPA to address certain effects on state, local, and tribal governments, but does not apply to the private sector. Since this regulation will affect only the private sector, and not any local, state, or tribal governments, the Executive Order does not apply.

IV. Paperwork Reduction Act

The information collection requirements in the Interim Final Rule were submitted for approval to the OMB under the Paperwork Reduction Act, 44 U.S.C. 3501 *et seq.* Under Section 1320.13 of this Act, EPA received emergency approval, and a six month extension of this approval, from OMB for the Interim Final Rule. The OMB's approval expires in August 1998. Information Collection Request (ICR) Supporting Statements were prepared by EPA for the emergency approval of the ICR for the Interim Final Rule (ICR No. 1808.01) and the extension of this approval, and copies may be obtained from Ms. Sandy Farmer, Regulatory Information Division (2136), U.S. Environmental Protection Agency, 401 M Street, S.W., Washington, D.C. 20460; telephone: (202) 260–2740.

The emergency request for ICR approval along with the Interim Final Rule were necessary so that implementing regulations would be in place contemporaneously with the United States' ratification of the Protocol and in order to implement its obligations under the Protocol as soon as the Protocol entered into force. The Interim Final Rule provides nongovernmental operators with the specific environmental documentation requirements they must meet in order to comply with the Protocol.

Nongovernmental operators, including tour operators, conducting expeditions to Antarctica are required to submit environmental documentation to EPA that evaluates the potential environmental impact of their proposed activities. If EPA has no comments, or if the documentation is satisfactorily revised in response to EPA's comments, and the operator does not receive a notice from EPA that the environmental documentation does not meet the requirements of Article 8 and Annex I of the Protocol and the provisions of the interim final regulations, the operator will have no further obligations pursuant to the applicable requirements of the interim final regulations provided that any appropriate measures, which may include monitoring, are put in place to assess and verify the impact of the activity.

The type of environmental document required depends upon the nature and intensity of the environmental impacts that could result from the activity under consideration. The Interim Final Rule provides for incorporation of material into an environmental document by referring to it in the document when the effect will be to reduce paperwork. Further, an operator may include more than one proposed expedition within one environmental document and one environmental document may also be used to address expeditions being carried out by more than one operator further reducing burden. In addition, EPA anticipates that operators will likely use the environmental documents submitted for their 1997–1998 expeditions, with appropriate revisions, for submittal in subsequent years under the Interim Final Rule.

This action is merely an extension of the effective date of the Interim Final Rule, and is being taken in part in response to Antarctica tour operators. The EPA is preparing the ICR Supporting Statement for the Interim Final Rule taking into account the experience of the Federal agencies and the nongovernmental operators, including tour operators, subject to the Interim Final Rule during the 1997–1998 austral season covered by OMB's emergency ICR approval. A **Federal Register** Notice will be published informing the public of the availability of the Supporting Statement for review and comment. Following the public comment period, EPA will address any relevant comments and then request OMB's approval of the ICR for the Interim Final Rule prior to the information collection schedule for the 1998–1999 austral season. For the limited time the Interim Final Rule will be in effect, the EPA anticipates that operators will, as they did for the 1997–1998 austral season, make one submittal per year for all of their expeditions for that year. No capital costs or operational and maintenance costs are anticipated to be incurred as a result of the ICR for the Interim Final Rule. The following estimates were provided in the Interim Final Rule promulgated on April 30, 1997 (62 FR 83, 23538 (April 30, 1997)).

Frequency of Reporting: Once per year.

Affected Public: Businesses, other nongovernmental entities including for profit entities, and not for profit institutions.

Number of Respondents: 8.

Estimated Average Time Per Respondent: 120 Hours.

Total Annual Burden Hours: 960.

Burden means the total time, effort, or financial resources expended by persons to generate, maintain, retain, or disclose or provide information to or for a Federal agency. This includes the time needed to: review instructions; develop, acquire, install, and utilize technology and systems for the purposes of collecting, validating, and verifying information, processing and maintaining information, and disclosing and providing information; adjust the existing ways to comply with any previously applicable instructions and requirements; train personnel to be able to respond to a collection of information; search data sources; complete and review the collection of information; and transmit or otherwise disclose the information.

An agency may not conduct or sponsor, and a person is not required to respond to, a collection of information unless it displays a currently valid OMB control number. The OMB control numbers for EPA's regulations are listed in 40 CFR Part 9 and 48 CFR Chapter 15.

V. National Technology Transfer and Advancement Act

Under the National Technology Transfer and Advancement Act, 15 U.S.C. 272 note, EPA must use voluntary consensus standards to carry out policy objectives or activities unless it would be impractical to do so. In this case, such standards, applicable to this regulation, do not exist. Accordingly, the use of such standards is not required.

VI. Submission to Congress and the Comptroller General

The Congressional Review Act, 5 U.S.C. 801 *et seq.*, as added by the Small Business Regulatory Enforcement Fairness Act of 1996, generally provides that, before a rule may take effect, the agency promulgating the rule must submit a rule report, which includes a copy of the rule, to each House of the Congress and to the Comptroller General of the United States. EPA will submit a report containing this direct amendment to interim final rule and other required information to the U.S. Senate, the U.S. House of Representatives, and the Comptroller General of the United States prior to publication of the direct amendment to interim final rule in the **Federal Register**. This direct final rule is not a ''major rule'' as defined by 5 U.S.C. 804(2).

List of Subjects in 40 CFR Part 8

Environmental protection, Antarctica, Enforcement, Environmental documentation, Environmental impact assessment, Penalties, Prohibited acts.

Dated: April 2, 1998.

Steven A. Herman,

Assistant Administrator, Office of Enforcement and Compliance Assurance.

Therefore, for the reasons set out in the preamble, title 40 chapter 1 of the Code of Federal Regulations is amended as follows:

PART 8—ENVIRONMENTAL IMPACT ASSESSMENT OF NONGOVERNMENTAL ACTIVITIES IN ANTARCTICA

1. The authority citation for part 8 continues to read as follows:

Authority: 16 U.S.C. 2401 *et seq.*, as amended, 16 U.S.C. 2403a.

2. Section 8.2 is amended by revising paragraph (d) to read as follows:

§ 8.2 Applicability and effect.

* * * * *

(d) This part is effective on April 30, 1997. This part will expire upon the earlier of the end of the 2000–2001 austral summer season or upon issuance of a final regulation.

3. Section 8.8 is amended by revising paragraphs (b)(1) and (b)(2) to read as follows:

§ 8.8 Comprehensive environmental evaluation.

* * * * *

(b) *Submission of Draft CEE to the EPA and Circulation to Other Parties.* (1) For the 1998–1999, 1999–2000, and 2000–2001 austral seasons, any operator who plans a nongovernmental expedition which would require a CEE must submit a draft of the CEE by December 1, 1997, December 1, 1998, and December 1, 1999, respectively. Within fifteen (15) days of receipt of the draft CEE, EPA will: send it to the Department of State which will circulate it to all Parties to the Protocol and forward it to the Committee for Environmental Protection established by the Protocol, and publish notice of receipt of the CEE and request for comments on the CEE in the **Federal Register**, and will provide copies to any person upon request. The EPA will accept public comments on the CEE for a period of ninety (90) days following notice in the **Federal Register**. The EPA, in consultation with other interested federal agencies, will evaluate the CEE to determine if the CEE meets the requirements under Article 8 and Annex I to the Protocol and the provisions of this part and will transmit its comments to the operator within 120 days following publication in the **Federal Register** of the notice of availability of the CEE.

(2) The operator shall send a final CEE to EPA at least seventy-five (75) days before commencement of the proposed activity in the Antarctic Treaty area. The CEE must include (or summarize) any comments on the draft CEE received from EPA, the public, and the Parties, including comments offered at the XXII Antarctic Treaty Consultative Meeting in 1998, the XXIII Antarctic Treaty Consultative Meeting in 1999, and the XXIV Antarctic Treaty Consultative Meeting in 2000 for CEEs submitted for the 1998–1999, 1999–2000, and 2000–2001 austral seasons, respectively. Following the final response from the operator, the EPA will inform the operator if EPA, with the concurrence of the National Science Foundation, makes the finding that the environmental documentation submitted does not meet the requirements of Article 8 and Annex I of the Protocol and the provisions of this part. This notification will occur within fifteen (15) days of submittal of the final CEE by the operator if the final CEE is submitted by the operator within the time limits set out in this section. If no final CEE is submitted or the operator fails to meet these time limits, EPA will provide such notification sixty (60) days prior to departure of the expedition. If EPA does not provide such notice, the operator will be deemed to have met the requirements of this part provided that procedures, which include appropriate monitoring, are put in place to assess and verify the impact of the activity. The EPA will transmit the CEE, along with a notice of any decisions by the operator relating thereto, to the Department of State which shall circulate it to all Parties no later than sixty (60) days before commencement of the proposed activity in the Antarctic Treaty area. The EPA will also publish a notice of availability of the final CEE in the **Federal Register**.

* * * * *

[FR Doc. 98–10006 Filed 4–14–98; 8:45 am]

BILLING CODE 6560–50–P

ENVIRONMENTAL PROTECTION AGENCY

40 CFR Part 180

[OPP–300623; FRL–5773–9]

2070–AB78

Canola Oil; Exemption from the Requirement of a Tolerance

AGENCY: Environmental Protection Agency (EPA).

ACTION: Final rule.

SUMMARY: This rule establishes an exemption from the requirement of a tolerance for residues of canola oil, i.e., low erucic acid rapeseed oil (containing no more than 2% erucic acid), when used as an insecticide in or on all food commodities. W. Neudorff GmbH KG submitted a petition to the EPA under the Federal Food, Drug and Cosmetic Act (FFDCA) as amended by the Food Quality Protection Act (FQPA) of 1996 requesting the exemption from the requirement of a tolerance. This regulation eliminates the need to establish a maximum permissible level for residues of this insecticide in or on all food commodities.

EFFECTIVE DATE: This regulation is effective April 15, 1998. Objections and requests for hearings must be received on or before June 15, 1998.

ADDRESSES: Written objections and hearing requests, identified by the docket control number [OPP–300623], may be submitted to: Hearing Clerk (1900), Environmental Protection Agency, Rm. M3708, 401 M St., SW., Washington, DC 20460. Fees accompanying objections and hearing requests shall be labeled ''Tolerance Petition Fees'' and forwarded to: EPA Headquarters Accounting Operations Branch, OPP (Tolerance Fees), P.O. Box 360277M, Pittsburgh, PA 15251. A copy of any objections and hearing requests filed with the Hearing Clerk should be identified by the docket control number [OPP–300623] and submitted to: Public Information and Records Integrity Branch, Information Resources and Services Division (7502C), Office of Pesticide Programs, Environmental protection Agency, 401 M St., SW., Washington, DC 20460. In person, bring copy of objections and hearing requests to: Rm. 119, CM #2, 1921 Jefferson Davis Hwy., Arlington, VA.

A copy of objections and hearing requests filed with the Hearing Clerk may be submitted electronically by sending electronic mail (e-mail) to: opp-docket@epamail.epa.gov. Copies of electronic objections and hearing requests must be submitted as an ASCII file avoiding the use of special characters and any form of encryption. Copies of electronic objections and hearing requests will also be accepted on disks in WordPerfect 5.1 or 6.1 file format or ASCII file format. All copies of electronic objections and hearing requests must be identified by the docket control number [OPP–300623]. No Confidential Business Information (CBI) should be submitted through e-mail. Copies of electronic objections and hearing requests on this rule may be filed online at many Federal Depository Libraries.

FOR FURTHER INFORMATION CONTACT: By mail: Susanne Cerrelli, c/o Product Manager (PM) 90, Biopesticides and Pollution Prevention Division (7511W), Office of Pesticide Programs, Environmental Protection Agency, 401 M St., SW., Washington, DC 20460, Office location and telephone number and e-mail address: CS1 Rm. 5-W31, 2800 Crystal Drive, Arlington, VA, 703–308–8077, e-mail: cerrelli.susanne@epamail.epa.gov.

SUPPLEMENTARY INFORMATION: W. Neudorff GmbH KG, c/o Walter G. Telarek, PC, 1008 Riva Ridge Drive, Great Falls, VA, has requested in pesticide petition PP 7F4804 the establishment of an exemption from the requirement of a tolerance for residues of canola oil. A notice of filing (FRL–5597–6) was published in the **Federal Register** (62 FR 17812) on April 11, 1997, and the notice announced that the comment period would end on May 11, 1997; no comments were received. This exemption from the requirement of a tolerance will permit the marketing of raw agricultural commodities when treated in accordance with EPA Reg No. 67702–U, which is being issued under the Federal Insecticide, Fungicide, and Rodenticide Act (FIFRA), as amended (Pub. L. 95–396, 92 Stat. 819; 7 U.S.C. 136). The data submitted in the petition and all other relevant material have been evaluated. The following is a summary of EPA's findings regarding this petition.

I. Product Identity

NEU 1160 Vegetable Oil Insecticide (EPA file symbol No. 067702–U) is the first pesticide product containing low erucic acid rapeseed oil as the active ingredient. The rapeseed oil in this product contains less than 2% erucic acid and conforms with 21 CFR 184.1555(c). Canola oil is the common name of this active ingredient. Canola oil is the full refined edible oil obtained from certain varieties of plants, i.e. *Brassica campetris*, or *B. napus*, of the family Cruciferae.

II. Risk Assessment and Statutory Findings

New section 408(c)(2)(a)(i) of FFDCA allows EPA to establish an exemption from the requirement of a tolerance (the legal limit for a pesticide chemical residue in or on a food) only if EPA determines that the tolerance is ''safe.'' Section 408(c)(2)(ii) defines ''safe'' to mean that ''there is a reasonable certainty that no harm will result from aggregate exposure to the pesticide chemical residue, including all anticipated dietary exposures and all other exposures for which there is reliable information.'' This includes exposure through drinking water and in residential settings, but does not include occupational exposure. Section 408(c)(2)(b) requires EPA to give special consideration to exposure of infants and children to the pesticide chemical residue in establishing a tolerance and to ''ensure that there is a reasonable certainty that no harm will result to infants and children from aggregate exposure to the pesticide chemical residue***.'' EPA performs a number of analyses to determine the risks from aggregate exposure to pesticide residues. First, EPA determines the toxicity of pesticides. Second, EPA examines exposure to the pesticide through food, drinking water, and through other exposures that occur as a result of pesticide use in residential settings.

III. Toxicological Profile

Consistent with section 408(b)(2)(d) of FFDCA, EPA has reviewed the scientific data and other relevant information in support of this action and considered its validity, completeness, reliability, and relationship to human risk. EPA has also considered available information concerning the variability of the sensitivities of major identifiable subgroups of consumers, including infants and children. Data waivers were requested for acute oral, dermal, inhalation, and eye toxicity, dermal sensitization, genotoxicity, reproductive and developmental toxicity, subchronic (90–day) oral and inhalation toxicity, and teratogenicity. The waivers were accepted based on the long history of use of canola as an edible fat and oil in food without any indication of deleterious effects; its low toxicity; its natural occurrence as an oil extracted from plants; its low erucic acid (less than 2%) content; its conformity with 21 CFR 184.1555(c); and its classification by FDA as ''generally recognized as safe'' (GRAS) for use as an edible fat or oil in human food. Available toxicity data on vegetable oils from the open literature and the Reregistration Eligibility Decision document for Flower and Vegetable Oils (EPA 738–R–93–031) support this finding.

IV. Residue Chemistry

A waiver was requested and granted for the following residue data requirements: (1) Magnitude of residue anticipated at the time of harvest, and (2) method used to determine the residue. These are waived based on the rationale presented in Unit III of this preamble.

V. Aggregate Exposure

In examining aggregate exposure, FFDCA section 408 directs EPA to consider available information concerning exposures from the pesticide residue in food and all other non-occupational exposures. The primary non-food sources of exposure the Agency considers include drinking water or groundwater, and exposure through pesticide use in gardens, lawns, or buildings (residential and other indoor uses).

Dietary exposure of canola oil via food consumption exists due to its use as a fat and oil in food. Residues from use of the biochemical pesticide, canola oil, are expected to increase the current dietary exposures only minimally because the application rates for canola are very low. In addition, because the current uses of low erucic acid canola oil have low toxicity, the Agency has determined that the aggregate dietary risk from adding the pesticidal uses of canola would be minimal.

Exposure by the inhalation route would be negligible because canola oil has low volatility, and the maximum concentration applied to plants is 2% canola oil. In summary, the potential aggregate exposure, derived from non-dietary and non-occupational exposure, should be minimal.

VI. Cumulative Effects

Canola oil shares a common dietary metabolic disposition with other edible fats and oils. Canola oil and other cooking grade oils have been used for many years without reported toxicity. These fats and oils are not known to cause any direct toxic effects when part of a balanced diet.

VII. Endocrine Disruptors

The Agency has no information to suggest that canola oil has any effect on the immune and endocrine systems. The Agency is not requiring information on the endocrine effects of this biochemical pesticide at this time; Congress has allowed 3 years after August 3, 1996, for the Agency to implement a screening program with respect to endocrine effects. Nevertheless, the above discussion on exposure from all sources combined with the low toxicity of canola oil would indicate such testing would not be necessary.

VIII. Safety Determination for U.S. Population, Infants and Children

Based on the information discussed in Unit V of this preamble, EPA concludes that there is reasonable certainty that no harm will result from aggregate exposure to the U.S. population, including infants and children, to residues of canola oil. This includes all anticipated dietary exposures and all other exposures for which there is reliable information. The Agency has arrived at this conclusion because, as discussed in Unit III of this preamble, the toxicity of canola oil to mammals is very low and under reasonably foreseeable circumstances it does not pose a risk. FFDCA section 408 provides that EPA shall apply an additional ten-fold margin of exposure (safety) for infants and children in the case of threshold effects to account for pre- and post-natal toxicity and the completeness of the database, unless EPA determines that a different margin of exposure (safety) will be safe for infants and children. Margins of exposure (safety) are often referred to as uncertainty (safety) factors. In this instance, the Agency believes there is reliable data to support the conclusion that canola oil is practically non-toxic to mammals, including infants and children, and, thus, there are no threshold effects; therefore, EPA has not used a margin of exposure (safety) approach to assess the safety of canola oil. As a result, the provision requiring an additional margin of exposure (safety) does not apply.

IX. Other Considerations

1. *Analytical method.* The Agency proposes to establish an exemption from the requirement of a tolerance without any numerical limitation; therefore, an analytical method is not required for enforcement purposes for canola oil residues.

2. *Codex maximum residue level.* There are no CODEX tolerances nor international tolerance exemptions established for canola oil at this time.

X. Conclusion

Based on the information discussed above, EPA establishes an exemption from the requirement of a tolerance for Canola oil (low erucic acid rapeseed oil containing no more than 2% erucic acid). This exemption from the requirement of a tolerance will be revoked if any experience with or scientific data on this pesticide indicate that the tolerance is not safe.

XI. Objections and Hearing Requests

The new FFDCA section 408(g) provides essentially the same process for persons to ''object'' to a tolerance exemption regulation issued by EPA under new section 408(e) as was provided in the old section 408. However, the period for filing objections is 60 days, rather than 30 days. EPA currently has procedural regulations which govern the submission of objections and hearing requests. These regulations will require some modification to reflect the new law. However, until those modifications can be made, EPA will continue to use those procedural regulations with appropriate adjustments to reflect the new law.

Any person adversely affected by this regulation may, by June 15, 1998, file written objections to the regulation and may also request a hearing on those objections. Objections and hearing requests must be filed with the Hearing Clerk, at the address given above (40 CFR 178.20). A copy of the objections and/or hearing requests filed with the Hearing Clerk should be submitted to the OPP docket for this rulemaking. The objections submitted must specify the provisions of the regulation deemed objectionable and the grounds for the objections (40 CFR 178.25). Each objection must be accompanied by the fee prescribed by 40 CFR 180.33(i). If a hearing is requested, the objections must include a statement of the factual issue(s) on which a hearing is requested, the requestor's contentions on such issues, and a summary of any evidence relied upon by the objector (40 CFR 178.27). A request for a hearing will be granted if the Administrator determines that the material submitted shows the following: There is genuine and substantial issue of fact; there is reasonable possibility that available evidence identified by the requestor would, if established, resolve one or more of such issues in favor of the requestor, taking into account uncontested claims or facts to the contrary; and resolution of the factual issue(s) in the manner sought by the requestor would be adequate to justify the action requested (40 CFR 178.32). Information submitted in connection with an objection or hearing request may be claimed confidential by marking any part or all of that information as CBI. Information so marked will not be disclosed except in accordance with procedures set forth in 40 CFR part 2. A copy of the information that does not contain CBI must be submitted for inclusion in the public record. Information not marked confidential may be disclosed publicly by EPA without prior notice.

XII. Public Docket and Electronic Submissions

EPA has established a record for this rulemaking under docket control number [OPP–300623] (including any comments and data submitted electronically). A public version of this record, including printed, paper versions of electronic comments, which does not include any information

claimed as CBI, is available for inspection from 8:30 a.m. to 4 p.m., Monday through Friday, excluding legal holidays. The public record is located in Room 119 of the Public Information and Records Integrity Branch, Information Resources and Services Division (7502C), Office of Pesticide Programs, Environmental Protection Agency, Crystal Mall #2, 1921 Jefferson Davis Highway, Arlington, VA.

Electronic comments may be sent directly to EPA at:

opp-docket@epamail.epa.gov.

Electronic comments must be submitted as an ASCII file avoiding the use of special characters and any form of encryption.

The official record for this rulemaking, as well as the public version, as described above will be kept in paper form. Accordingly, EPA will transfer any copies of objections and hearing requests received electronically into printed, paper form as they are received and will place the paper copies in the official rulemaking record which will also include all comments submitted directly in writing. The official rulemaking record is the paper record maintained at the Virginia address in ''ADDRESSES'' at the beginning of this document.

XIII. Regulatory Assessment Requirements

This final rule establishes an exemption from the tolerance requirement under FFDCA section 408(d) in response to a petition submitted to the Agency. The Office of Management and Budget (OMB) has exempted these types of actions from review under Executive Order 12866, entitled Regulatory Planning and Review (58 FR 51735, October 4, 1993). This final rule does not contain any information collections subject to OMB approval under the Paperwork Reduction Act (PRA), 44 U.S.C. 3501 et seq., or impose any enforceable duty or contain any unfunded mandate as described under Title II of the Unfunded Mandates Reform Act of 1995 (UMRA) (Pub. L. 104–4). Nor does it require any prior consultation as specified by Executive Order 12875, entitled Enhancing the Intergovernmental Partnership (58 FR 58093, October 28, 1993), or special considerations as required by Executive Order 12898, entitled Federal Actions to Address Environmental Justice in Minority Populations and Low-Income Populations (59 FR 7629), February 16, 1994), or require OMB review in accordance with Executive Order 13045, entitled Protection of Children from Environmental Health Risks and Safety Risks (62 FR 19885, April 23, 1997).

In addition, since tolerance exemptions that are established on the basis of a petition under FFDCA section 408(d), such as the exemption in this final rule, do not require the issuance of a proposed rule, the requirements of the Regulatory Flexibility Act (RFA) (5 U.S.C. 601 et seq.) do not apply. Nevertheless, the Agency previously assessed whether establishing tolerances, exemptions from tolerances, raising tolerance levels or expanding exemptions might adversely impact small entities and concluded, as a generic matter, that there is no adverse economic impact. The factual basis for the Agency's generic certification for tolerance actions published on May 4, 1981 (46 FR 24950) was provided to the Chief Counsel for Advocacy of the Small Business.

XIV. Submission to Congress and the Comptroller General

The Congressional Review Act, 5 U.S.C. 801 *et seq.*, as added by the Small Business Regulatory Enforcement Fairness Act of 1996, generally provides that before a rule may take effect, the Agency promulgating the rule must submit a rule report, which includes a copy of the rule, to each House of the Congress and the Comptroller General of the United States. EPA will submit a report containing this rule and other required information to the U.S. Senate, the U.S. House of Representatives and the Comptroller General of the United States prior to publication of the rule in the **Federal Register**. This rule is not a ''major rule'' as defined by 5 U.S.C. 804(2).

List of Subjects in 40 CFR Part 180

Environmental protection, Administrative practice and procedure, Agricultural commodities, pesticides and pests, Reporting and recordkeeping requirements.

Dated: April 3, 1998.

Marcia E. Mulkey,

Director, Office of Pesticide Programs.

PART 180—[AMENDED]

1. The authority citation for part 180 continues to read as follows:

Authority: 21 U.S.C. 346a and 371.

2. Section 180.1194 is added to read as follows:

§ 180.1194 Canola oil; exemption from the requirement of a tolerance.

An exemption from the requirement of a tolerance is established for residues of the biochemical pesticide, canola oil, conforming to the following definition when used as an insecticide, in or on all food commodities: Canola oil, also known as low erucic rapeseed oil, is the fully refined, bleached, and deodorized edible oil obtained from certain varieties of *Brassica Napus* or *B. Campestris* of the family Cruciferae. Canola oil contains no more than 2 percent erucic acid.

[FR Doc. 98–10013 Filed 4–14–98; 8:45 am]

BILLING CODE 6560–50–F

ENVIRONMENTAL PROTECTION AGENCY

40 CFR Part 180

[OPP–300644; FRL–5785–7]

RIN 2070–AB78

Spinosad; Pesticide Tolerances

AGENCY: Environmental Protection Agency (EPA).

ACTION: Final rule.

SUMMARY: This regulation establishes permanent tolerances for residues of spinosad in or on almonds at 0.02 parts per million (ppm); almond hulls at 2.0 ppm; apples at 0.2 ppm; apple pomace, wet at 0.5 ppm; citrus fruits group at 0.3 ppm; citrus pulp, dried at 0.5 ppm; citrus oil at 3.0 ppm; cottonseed at 0.02 ppm; cotton gin byproducts at 1.5 ppm; fruiting vegetables (except cucurbits) group at 0.4 ppm; Brassica (cole), leafy vegetables, head and stem subgroup at 2.0 ppm; Brassica (cole), leafy vegetables, greens subgroup at 10.0 ppm; leafy vegetables (except Brassica vegetables) group at 8.0 ppm; fat of cattle, goats, hogs, horses, and sheep at 0.6 ppm; meat of cattle, goats, hogs, horses, and sheep at 0.04; meat byproducts of cattle, goats, hogs, horses, and sheep at 0.2 ppm; milk fat at 0.5 ppm; and whole milk at 0.04 ppm. This regulation also removes the time limitation for the tolerance for residues of spinosad on cottonseed which expires on November 15, 1999. DowElanco requested these tolerances under the Federal Food, Drug, and Cosmetic Act (FFDCA), as amended by the Food Quality Protection Act of 1996 (FQPA) (Pub. L. 104-170). In addition, this regulation removes time-limited tolerances set under section 408(1)(6) of the FFDCA, as amended by the FQPA for residues of spinosad on fruiting vegetables (except cucurbits) group, tomato paste, leafy vegetables (except Brassica vegetables) group, and Brassica (cole), leafy vegetables, group at 0.25, 0.50, 10.0, and 10.0 ppm, respectively. These tolerances were set under the

section 18 emergency exemption provision of the FQPA and they expire on September 30, 1998. With this regulation, permanent tolerances are now being established to replace these time-limited tolerances with the exception of tomato paste. A tolerance will not be established for tomato paste because EPA has determined that the maximum amount of spinosad residues expected in tomato paste is less than the proposed tolerance for tomatoes. Therefore, no tolerance is required for tomato paste.

DATES: This regulation is effective April 15, 1998. Objections and requests for hearings must be received by EPA on or before June 15, 1998.

ADDRESSES: Written objections and hearing requests, identified by the docket control number, [OPP–300644], must be submitted to: Hearing Clerk (1900), Environmental Protection Agency, Rm. M3708, 401 M St., SW., Washington, DC 20460. Fees accompanying objections and hearing requests shall be labeled ''Tolerance Petition Fees'' and forwarded to: EPA Headquarters Accounting Operations Branch, OPP (Tolerance Fees), P.O. Box 360277M, Pittsburgh, PA 15251. A copy of any objections and hearing requests filed with the Hearing Clerk identified by the docket control number, [OPP–300644], must also be submitted to: Public Information and Records Integrity Branch, Information Resources and Services Division (7502C), Office of Pesticide Programs, Environmental Protection Agency, 401 M St., SW., Washington, DC 20460. In person, bring a copy of objections and hearing requests to Rm. 119, CM #2, 1921 Jefferson Davis Hwy., Arlington, VA.

A copy of objections and hearing requests filed with the Hearing Clerk may also be submitted electronically by sending electronic mail (e-mail) to: opp-docket@epamail.epa.gov. Copies of objections and hearing requests must be submitted as an ASCII file avoiding the use of special characters and any form of encryption. Copies of objections and hearing requests will also be accepted on disks in WordPerfect 5.1/6.1 file format or ASCII file format. All copies of objections and hearing requests in electronic form must be identified by the docket control number [OPP–300644]. No Confidential Business Information (CBI) should be submitted through e-mail. Electronic copies of objections and hearing requests on this rule may be filed online at many Federal Depository Libraries.

FOR FURTHER INFORMATION CONTACT: By mail: Beth Edwards, Registration Division 7505C, Office of Pesticide Programs, Environmental Protection Agency, 401 M St., SW., Washington, DC 20460. Office location, telephone number, and e-mail address: Crystal Mall #2, 1921 Jefferson Davis Hwy., Arlington, VA, (703) 305-5400, e-mail: edwards.beth@epamail.epa.gov.

SUPPLEMENTARY INFORMATION: On February 26, 1997, EPA established a time-limited tolerance under section 408 and 409 of the FFDCA, 21 U.S.C. 346a(d) and 348 for residues of spinosad on cottonseed (62 FR 8626) (FRL–5590–8). This tolerance expires on November 15, 1999. DowElanco, on December 11, 1997, requested that the time limitation be removed based on a cotton gin trash residue study that they had submitted as a condition of the registration and the time-limited tolerance. DowElanco also submitted a summary of its petition as required under the FFDCA as amended by the Food Quality Protection Act (FQPA) of 1996 (Pub. L. 104-170).

On October 22, 1997, EPA established time-limited tolerances under section 408(1)(6) of the FFDCA, as amended by the FQPA of 1996 for residues of spinosad on fruiting vegetables (except cucurbits) group, tomato paste, leafy vegetables (except Brassica vegetables) group, and Brassica (cole), leafy vegetables group at 0.25, 0.50, 10.0, and 10.0 ppm, respectively (62 FR 54771) (FRL–5746–6). These tolerances were set under the Section 18 emergency exemption provision of the FQPA and they expire on September 30, 1998. These emergency exemption tolerances for spinosad were granted to control Western Flower Thrips on fruiting vegetables (excluding cucurbits) in the states of Florida, Georgia and Arkansas, and to control beet armyworm on leafy vegetables (except Brassica) and Brassica leafy vegetables in Arizona.

In the **Federal Register** issues of December 24, 1996 (61 FR 67801) (FRL–5578–2), October 8, 1997 (62 FR 52558) (FRL–5748–6), and March 4, 1998 (63 FR 10609) (FRL–5774–1), EPA issued notices pursuant to section 408 of the FFDCA, 21 U.S.C. 346a(e) announcing the filing of pesticide petitions (PP) 7F4797, 7F4871, and 8F4942 for tolerances by DowElanco, 9330 Zionsville Road, Indianapolis IN 46268-1054. These notices included a summary of the petitions prepared by DowElanco, the registrant. There were no comments received in response to the notices of filing.

The petitions requested that 40 CFR 180.495 be amended by removing the time limitation for the tolerance for residues of the insecticide spinosad in or on cottonseed at 0.02 ppm and by establishing tolerances in or on almonds at 0.02 ppm; almond hulls at 2.0 ppm; apples at 0.2 ppm; apple pomace, wet at 0.5 ppm; citrus fruits group at 0.3 ppm; citrus pulp, dried at 0.5 ppm; citrus oil at 3.0 ppm; cotton gin byproducts at 1.5 ppm; fruiting vegetables (except cucurbits) group at 0.4 ppm; leafy vegetables (except Brassica vegetables) group at 8.0 ppm; Brassica (cole), leafy vegetables, head and stem subgroup at 2.0 ppm; Brassica (cole), leafy vegetables, greens subgroup at 15.0 ppm; fat of cattle, goats, hogs, horses, and sheep at 0.7 ppm; meat of cattle, goats, hogs, horses, and sheep at 0.04 ppm; meat byproducts of cattle, goats, hogs, horses, and sheep at 0.2 ppm; milk fat at 0.5 ppm; and whole milk at 0.04 ppm. EPA determined that the requested tolerances for fat of cattle, goats, hogs, horses, and sheep at 0.7 ppm and Brassica (cole), leafy vegetables, greens subgroup at 15.0 ppm were too high based on magnitude of the residue studies. EPA recommended that the tolerances be set at 0.6 ppm and 10.0 ppm, respectively.

I. Risk Assessment and Statutory Findings

New section 408(b)(2)(A)(i) of the FFDCA allows EPA to establish a tolerance (the legal limit for a pesticide chemical residue in or on a food) only if EPA determines that the tolerance is ''safe.'' Section 408(b)(2)(A)(ii) defines ''safe'' to mean that ''there is a reasonable certainty that no harm will result from aggregate exposure to the pesticide chemical residue, including all anticipated dietary exposures and all other exposures for which there is reliable information.'' This includes exposure through drinking water and in residential settings, but does not include occupational exposure. Section 408(b)(2)(C) requires EPA to give special consideration to exposure of infants and children to the pesticide chemical residue in establishing a tolerance and to ''ensure that there is a reasonable certainty that no harm will result to infants and children from aggregate exposure to the pesticide chemical residue. . . .''

EPA performs a number of analyses to determine the risks from aggregate exposure to pesticide residues. First, EPA determines the toxicity of pesticides based primarily on toxicological studies using laboratory animals. These studies address many adverse health effects, including (but not limited to) reproductive effects, developmental toxicity, toxicity to the nervous system, and carcinogenicity. Second, EPA examines exposure to the pesticide through the diet (e.g., food and drinking water) and through exposures

that occur as a result of pesticide use in residential settings.

A. Toxicity

1. *Threshold and non-threshold effects.* For many animal studies, a dose response relationship can be determined, which provides a dose that causes adverse effects (threshold effects) and doses causing no observed effects (the ''no-observed effect level'' or ''NOEL'').

Once a study has been evaluated and the observed effects have been determined to be threshold effects, EPA generally divides the NOEL from the study with the lowest NOEL by an uncertainty factor (usually 100 or more) to determine the Reference Dose (RfD). The RfD is a level at or below which daily aggregate exposure over a lifetime will not pose appreciable risks to human health. An uncertainty factor (sometimes called a ''safety factor'') of 100 is commonly used since it is assumed that people may be up to 10 times more sensitive to pesticides than the test animals, and that one person or subgroup of the population (such as infants and children) could be up to 10 times more sensitive to a pesticide than another. In addition, EPA assesses the potential risks to infants and children based on the weight of the evidence of the toxicology studies and determines whether an additional uncertainty factor is warranted. Thus, an aggregate daily exposure to a pesticide residue at or below the RfD (expressed as 100 percent or less of the RfD) is generally considered acceptable by EPA. EPA generally uses the RfD to evaluate the chronic risks posed by pesticide exposure. For shorter term risks, EPA calculates a margin of exposure (MOE) by dividing the estimated human exposure into the NOEL from the appropriate animal study. Commonly, EPA finds MOEs lower than 100 to be unacceptable. This 100-fold MOE is based on the same rationale as the 100-fold uncertainty factor.

Lifetime feeding studies in two species of laboratory animals are conducted to screen pesticides for cancer effects. When evidence of increased cancer is noted in these studies, the Agency conducts a weight of the evidence review of all relevant toxicological data including short-term and mutagenicity studies and structure activity relationship. Once a pesticide has been classified as a potential human carcinogen, different types of risk assessments (e.g., linear low dose extrapolations or MOE calculation based on the appropriate NOEL) will be carried out based on the nature of the carcinogenic response and the Agency's knowledge of its mode of action.

2. *Differences in toxic effect due to exposure duration.* The toxicological effects of a pesticide can vary with different exposure durations. EPA considers the entire toxicity data base, and based on the effects seen for different durations and routes of exposure, determines which risk assessments should be done to assure that the public is adequately protected from any pesticide exposure scenario. Both short and long durations of exposure are always considered. Typically, risk assessments include ''acute,'' ''short-term,'' ''intermediate term,'' and ''chronic'' risks. These assessments are defined by the Agency as follows.

Acute risk, by the Agency's definition, results from 1-day consumption of food and water, and reflects toxicity which could be expressed following a single oral exposure to the pesticide residues. High end exposure to food and water residues are typically assumed.

Short-term risk results from exposure to the pesticide for a period of 1-7 days, and therefore overlaps with the acute risk assessment. Historically, this risk assessment was intended to address primarily dermal and inhalation exposure which could result, for example, from residential pesticide applications. However, since enaction of FQPA, this assessment has been expanded to include both dietary and non-dietary sources of exposure, and will typically consider exposure from food, water, and residential uses when reliable data are available. In this assessment, risks from average food and water exposure, and high-end residential exposure, are aggregated. High-end exposures from all three sources are not typically added because of the very low probability of this occurring in most cases, and because the other conservative assumptions built into the assessment assure adequate protection of public health. However, for cases in which high-end exposure can reasonably be expected from multiple sources (e.g. frequent and widespread homeowner use in a specific geographical area), multiple high-end risks will be aggregated and presented as part of the comprehensive risk assessment/characterization. Since the toxicological endpoint considered in this assessment reflects exposure over a period of at least 7 days, an additional degree of conservatism is built into the assessment; i.e., the risk assessment nominally covers 1-7 days exposure, and the toxicological endpoint/NOEL is selected to be adequate for at least 7 days of exposure. (Toxicity results at lower levels when the dosing duration is increased.)

Intermediate-term risk results from exposure for 7 days to several months. This assessment is handled in a manner similar to the short-term risk assessment.

Chronic risk assessment describes risk which could result from several months to a lifetime of exposure. For this assessment, risks are aggregated considering average exposure from all sources for representative population subgroups including infants and children.

B. Aggregate Exposure

In examining aggregate exposure, FFDCA section 408 requires that EPA take into account available and reliable information concerning exposure from the pesticide residue in the food in question, residues in other foods for which there are tolerances, residues in groundwater or surface water that is consumed as drinking water, and other non-occupational exposures through pesticide use in gardens, lawns, or buildings (residential and other indoor uses). Dietary exposure to residues of a pesticide in a food commodity are estimated by multiplying the average daily consumption of the food forms of that commodity by the tolerance level or the anticipated pesticide residue level. The Theoretical Maximum Residue Contribution (TMRC) is an estimate of the level of residues consumed daily if each food item contained pesticide residues equal to the tolerance. In evaluating food exposures, EPA takes into account varying consumption patterns of major identifiable subgroups of consumers, including infants and children. The TMRC is a ''worst case'' estimate since it is based on the assumptions that food contains pesticide residues at the tolerance level and that 100% of the crop is treated by pesticides that have established tolerances. If the TMRC exceeds the RfD or poses a lifetime cancer risk that is greater than approximately one in a million, EPA attempts to derive a more accurate exposure estimate for the pesticide by evaluating additional types of information (anticipated residue data and/or percent of crop treated data) which show, generally, that pesticide residues in most foods when they are eaten are well below established tolerances.

II. Aggregate Risk Assessment and Determination of Safety

Consistent with section 408(b)(2)(D), EPA has reviewed the available scientific data and other relevant information in support of this action.

EPA has sufficient data to assess the hazards of spinosad and to make a determination on aggregate exposure, consistent with section 408(b)(2), for tolerances for residues of spinosad on almonds at 0.02 ppm; almond hulls at 2.0 ppm; apples at 0.2 ppm; apple pomace, wet at 0.5 ppm; citrus fruits group at 0.3 ppm; citrus pulp, dried at 0.5 ppm; citrus oil at 3.0 ppm; cottonseed at 0.02 ppm; cotton gin byproducts at 1.5 ppm; fruiting vegetables (except cucurbits) group at 0.4 ppm; leafy vegetables (except Brassica vegetables) group at 8.0 ppm; Brassica (cole), leafy vegetables, head and stem subgroup at 2.0 ppm; Brassica (cole), leafy vegetables, greens subgroup at 10.0 ppm; fat of cattle, goats, hogs, horses, and sheep at 0.6 ppm; meat and meat byproducts of cattle, goats, hogs, horses, and sheep at 0.04 ppm; milk fat at 0.5 ppm; and whole milk at 0.04 ppm. EPA's assessment of the dietary exposures and risks associated with establishing the tolerance follows.

A. Toxicological Profile

EPA has evaluated the available toxicity data and considered its validity, completeness, and reliability as well as the relationship of the results of the studies to human risk. EPA has also considered available information concerning the variability of the sensitivities of major identifiable subgroups of consumers, including infants and children. The nature of the toxic effects caused by spinosad are discussed below.

1. Acute toxicity studies with technical spinosad (88% - 90.4%): Oral LD_{50} in the rat is > 5,000 milligram/kilogram (mg/kg) for males and females - Toxicity Category IV; dermal LD_{50} in the rat is >2,800 mg/kg for males and females - Toxicity Category III; inhalation LC_{50} in the rat is >5.18 mg/L - Toxicity Category IV; primary eye irritation in the rabbit (slight conjunctival irritation) - Toxicity Category IV; primary dermal irritation in the rabbit (no erythema and edema) - Toxicity Category IV. Spinosad is not a sensitizer.

2. Acute toxicity studies with the end-use (44% formulation) product for spinosad: Oral LD_{50} in the rat is >5,000 mg/kg for males and females - Toxicity Category IV; dermal LD_{50} in the rat is >2,800 mg/kg for males and females - Toxicity Category III; inhalation LC_{50} in the rat is >5 mg/L - Toxicity Category IV; primary eye irritation in the rabbit (slight conjunctival irritation) - Toxicity Category IV; primary dermal irritation in the rabbit (slight transient erythema and edema) - Toxicity Category IV; not a sensitizer.

3. In a subchronic feeding study in rats, the no-observed adverse effect level (NOAEL) was 33.9 and 38.8 mg/kg/day for males and females, respectively. The lowest observed effect level (LOEL) was 68.5 and 78.1 mg/kg/day for males and females, respectively based on decreased body weight gain, anemia, and vacuolation in multiple organs (kidney, liver, heart, spleen, adrenals, and thyroid).

4. In a subchronic feeding study in mice, the NOEL was 7.5 mg/kg/day and the LOEL was 22.5 mg/kg/day based on cytoplasmic vacuolation in multiple organs (kidney, liver, heart, stomach, lymphoid organs, and ovary).

5. In a subchronic feeding study in dogs, the NOEL was 4.89 and 5.38 mg/kg/day for males and females, respectively. The LOEL was 9.73 mg/kg/day and 10.5 mg/kg/day based on decreased mean body weights and food consumption, and anemia.

6. In a 21-day dermal study in rats, the NOEL for systemic effects was > 1,000 mg/kg/day (limit dose). No systemic toxicity was observed at any dose tested.

7. In a chronic feeding study in dogs, the NOEL was 2.68 mg/kg/day. The LOEL was 8.22 mg/kg/day based on increased liver enzymes (ALT, AST), triglycerides; vacuolated cells (parathyroid), and arteritis.

8. In a carcinogenicity study in mice, the NOEL was 11.4 mg/kg/day. The LOEL was 50.9 mg/kg/day based on decreased body weight gains, increased mortality, hematologic effects, increased thickening of the gastric mucosa, and histologic changes in the stomach of males.

9. In a chronic feeding/carcinogenicity/neurotoxicity study in rats, the NOEL (systemic) was 9.5 and 12.0 mg/kg/day for males and females, respectively. The LOEL (systemic) was 24.1 and 30.3 mg/kg/day for males and females, respectively based on vacuolation of epithelial follicular cells of the thyroid. The neurological NOEL was 46 and 57 mg/kg/day for males and females, respectively. The neurological LOEL was not determined.

10. In a developmental study in rabbits, the maternal NOEL was ≥50 mg/kg/day. The maternal LOEL was not established. The developmental NOEL was ≥50 mg/kg/day. The developmental LOEL was not established.

11. In a developmental study in rats, the maternal NOEL was >200 mg/kg/day. The maternal LOEL was not established. The developmental NOEL was >200 mg/kg/day. The developmental LOEL was not established.

12. In a two-generation reproduction toxicity study in rats, the systemic NOEL was 10 mg/kg/day. The systemic LOEL was 100 mg/kg/day based on increased organ weights (heart, liver, kidney, spleen, thyroid), histopath lesions in the lungs and mesenteric lymph nodes, stomach (F), and prostate. The reproductive NOEL was 10 mg/kg/day. The reproductive LOEL was 100 mg/kg/day based on decreased litter size, decreased pup survival, decreased body weight, increased incidence of dystocia and/or vaginal bleeding post-partum with associated increased mortality of dams.

13. Studies on gene mutation and other genotoxic effects: In a Gene Mutation Assay (mouse forward mutation) there was no forward mutation induction in mouse lymphoma L5178Y Tk +/- cells at concentrations of 0, 1, 5, 10, 15, 20, or 25 µg/ml without metabolic activation or at concentrations of 15 through 50 µg/ml with metabolic activation. In a Structural Chromosomal Aberration Assay *in vitro* there was no increase in the number of CHO (chinese hamster ovary) cells with chromosomal aberrations at concentratioins from 20 to 35 µg/ml (without activation) or concentrations from 100 to 500 µg/ml (with activation). In a Micronucleus Test in mice, there was no increase in the frequencey of micronuclei in bone marrow cells from mice treated at concentratioins from 500 to 2,000 µg/ml for two days. In Other Genotoxicity Assays, unscheduled DNA synthesis was not induced in adult rat hepatocytes in vitro at concentrations of 0.01 to 5 µg/ml tested.

14. The results of three metabolism studies are as follows: (i) Approximately 95% of technical spinosad was eliminated by 24 hours mainly in the urine (34%), bile (36%), and tissues and carcass (21%). Metabolites include the glutathione conjugates of the unchanged form as well as N- and O-demethylated forms of XDE-105 (Factor D). (ii) At 100 mg/kg/dose, the radiolabeled XDE-105 (Factor D) was primarily excreted in the feces (68%) after 24-hours. The absorption, distribution, and elimination of 14C-XDE-105 (Factor A) demonstrated no appreciable differences based on dose or repeated dosing. (iii) At high (100 mg/kg) doses, there are no major differences in the bioavailability, routes or rates of excretion or metabolism of 14C-XDE-105 (Factor A) following oral administration.

15. In an acute neurotoxicity study, groups of Fischer 334 rats (10/sex/dose) received a single oral (gavage) administration of spinosad (87.9%) at dose levels of 0, 200, 630, or 2,000 mg/

kg. There were no effects on neurobehavioral endpoints or histopathology of the nervous system. For neurotoxicity, the NOEL was ≥ 2,000 mg/kg/day, highest dose tested (HDT). A LOEL was not established.

16. In a subchronic neurotoxicity study, groups of Fischer 344 rats (10/sex/dose) were administered diets containing spinosad at levels of 0, 0.003, 0.006, 0.012, or 0.06% (0, 2.2, 4.3, 8.6, or 42.7 mg/kg/day for males and 2.6, 5.2, 10.4, or 52.1 mg/kg/day for females, respectively). There were no effects on neurobehavior endpoints or histopathology of the nervous system. For neurotoxicity, the NOEL was ≥ 42.7 and ≥52.1 mg/kg/day in males and females, respectively (HDT).

17. In the 2-year chronic neurotoxicity study, groups of Fischer 344 rats (65/sex/dose) received diets containing spinosad at dose levels of 0, 0.005, 0.02, 0.05, or 0.1% (0, 2.4, 9.5, 24.1, or 49.4 mg/kg/day for males and 0, 3.0, 12.0, 30.3, or 62.2 mg/kg/day for females, respectively). Neurobehavioral testing performed at 3, 6, 9, and 12 months of study was negative, and histopathological evaluation of perfused tissues at study termination did not identify pathology of the central or peripheral nervous system. There was no evidence of neurotoxicity. For neuropathology, the NOEL was 0.1% (≥ 46 mg/kg/day for males and 57 mg/kg/day for females (HDT).

B. Toxicological Endpoints

1. *Acute toxicity*. EPA did not select a dose and endpoint for an acute dietary risk assessment due to the lack of toxicological effects attributable to a single exposure (dose) in studies available in the data base including oral developmental toxicity studies in rats and rabbits. In the acute neurotoxicity study the NOEL was ≥2,000 mg/kg/day.

2. *Short - (1 day to 7 days), intermediate- (1 week to several months), and chronic - term occupational and residential dermal and inhalation toxicity*. EPA did not select a dose or endpoint for short-, intermediate and long-term dermal risk assessments because (i) lack of appropriate endpoints; (ii) the combination of molecular structure and size as well as the lack of dermal or systemic toxicity at 2,000 mg/kg/day in a 21-day dermal toxicity study in rats which indicates the lack of dermal absorption; and (iii) the lack of long-term exposure based on the current use pattern. Therefore, a dermal risk assessment is not required. EPA also determined that based on the current use pattern and exposure scenario, an inhalation risk assessment is not required.

3. *Chronic toxicity*. EPA has established the RfD for spinosad at 0.027 mg/kg/day. This RfD is based on a chronic toxicity study in dogs using a NOEL of 2.68 mg/kg/day. The LOEL was 8.46 mg/kg/day based on vacuolation in glandular cells (parathyroid) and lymphatic tissues, arteritis and increases in serum enzymes such as alanine aminotransferase, and aspartate aminotransferase, and triglyceride levels in dogs fed spinosad in the diet at dose levels of 1.44, 2.68, or 8.46 mg/kg/day for 52 weeks. A 100-fold uncertainty factor (UF) was applied to the NOEL of 2.68 mg/kg/day to account for inter- and intra-species variation.

EPA determined that the 10X factor to account for enhanced sensitivity of infants and children (as required by FQPA) should be removed. Thus, an uncertainty factor of 100 is adequate and the RfD remains at 0.027 mg/kg/day.

The FQPA factor is removed because: (i) The data provided no indication of increased susceptibility of rats or rabbits to in utero and/or post-natal exposure to spinosad. In the prenatal developmental toxicity studies in rats and rabbits and the two-generation reproduction study in rats, effects in the offspring were observed only at or below treatment levels which resulted in evidence of parental toxicity. (ii) No neurotoxic signs have been observed in any of the standard required studies conducted. (iii) The toxicology data base is complete and there are no data gaps.

4. *Carcinogenicity*. There is no evidence of carcinogenicity in studies in either the mouse or rat.

C. Exposures and Risks

1. *From food and feed uses*. Tolerances have been established (40 CFR 180.495) for the residues of spinosad in or on cottonseed at 0.02 ppm (to expire on 11/15/99). Time-limited tolerances for Section 18 emergency exemptions are established under 40 CFR 180.495 for residues of spinosad in or on Brassica (cole) leafy vegetables at 10 ppm, fruiting vegetables (except cucurbit vegetables) at 0.25 ppm, leafy vegetables (except Brassica vegetables) at 10 ppm, and tomato paste at 0.5 ppm. Risk assessments were conducted by EPA to assess dietary exposures and risks from spinosad as follows:

i. *Acute exposure and risk*. Acute dietary risk assessments are performed for a food-use pesticide if a toxicological study has indicated the possibility of an effect of concern occurring as a result of a one day or single exposure. No acute toxicological endpoints were identified for spinosad due to the lack of toxicological effects attributable to a single exposure (dose). Therefore, the Agency concludes that there is a reasonable certainty of no harm from acute dietary exposure.

ii. *Chronic exposure and risk*. The RfD used for the chronic dietary analysis is 0.027 mg/kg/day. In conducting this chronic dietary risk assessment, EPA made very conservative assumptions: 100% of citrus, almonds, apples, fruiting (except cucurbit) vegetables, Brassica leafy vegetables, leafy vegetables, cottonseed, and ruminant commodities having spinosad tolerances will contain spinosad residues and those residues will be at the level of the established tolerance. This results in an overestimate of human dietary exposure. This chronic dietary risk assessment used 10 ppm tolerances for the leafy vegetables (except Brassica vegetables) crop group and for the Brassica leafy vegetables head and stem subgroup from section 18 tolerances that were established last year. For the section 3 registrations on these groups, EPA has recommended tolerances of 8 ppm (leafy vegetables) and 2 ppm (Brassica head and stem leafy vegetables). The use pattern for these section 18 registrations is identical to the section 3 registrations proposed in this risk assessment, but due to an incomplete data base at the time the Section 18s were reviewed, the tolerances were set high which resulted in a conservative risk assessment. With this action, these section 18 tolerances are replaced by the new section 3 tolerances. Thus, in making a safety determination for this tolerance, EPA is taking into account this conservative exposure assessment.

The existing spinosad tolerances (published, pending, and including the Section 18 tolerances) result in a Theoretical Maximum Residue Contribution (TMRC) that is equivalent to the following percentages of the RfD: U.S. Population (24% of RfD); Nursing Infants (<1 year old)(8% of RfD); Non-Nursing Infants (<1 year old) (24% of RfD); Children (1-6 years old) (34% of RfD); Children (7-12 years old) (29% of RfD); Northeast Region (25% of RfD); Western Region (27% of RfD); Non-Hispanic Blacks (27% of RfD); Non-Hispanic Others (37% of RfD); Females 13+ years, Nursing (27% of RfD).

2. *From drinking water*. The Agency has determined that spinosyns Factor A and Factor D are immobile in soil and will not leach into ground water. Based on structure/activity relationships, the Agency concluded that the spinosad metabolites/fermentation impurities

(spinosyns Factor B, Factor B of D, Factor K, and other related factors) were of no more toxicological concern than the two parent compounds (spinosyns Factor A and Factor D) and therefore, only these were considered in the drinking water assessment. EPA used the ''Interim Approach for Addressing Drinking Water Exposure in Tolerance Decision Making'' issued on November 17, 1997. Thus, the PRZM/EXAMS Models were run to produce estimates of spinosad in surface water. The primary use of these models is to provide a screen for sorting out pesticides for which OPP has a high degree of confidence that the true levels of the pesticide in drinking water will be less than the human health drinking water levels of concern (DWLOCs). A human health DWLOC is the concentration of a pesticide in drinking water which would result in acceptable aggregate risk, after having already factored in all food exposures and other non-occupational exposures for which OPP has reliable data. PRZM/EXAMS was used to conduct a Tier 2 surface water analysis. The Tier 2 estimated drinking water concentration (EEC) of spinosad from surface water sources is not likely to exceed 0.059 µg/L from use on apples, 0.092 µg/L from use on Brassica vegetables, 0.065 µg/L from use on cotton, and 0.075 µg/L from use on citrus.

i. *Acute exposure and risk*. Because no acute dietary endpoint was determined, the Agency concludes that there is a reasonable certainty of no harm from acute exposure from drinking water.

ii. *Chronic exposure and risk*. Based on the chronic dietary (food) exposure and using default body weights and water consumption figures, chronic drinking water levels of concern (DWLOC) for drinking water were calculated. The chronic drinking water exposure and risk estimates are 0.019890 mg/kg/day (690 µg/L DWLOC) for the overall U.S. population; 0.01896 mg/kg/day (570 µg/L DWLOC) for females 13+ years, nursing; and 0.016865 mg/kg/day (170 µg/L DWLOC) for children age 1-6 years.

3. *From non-dietary exposure.* There are no current residential uses for spinosad. However, the proposed use of a 0.5% spinosad product on structural lumber may have residential uses. This product is injected into drilled holes and then sealed after treatment. Due to the lack of toxicity endpoints (hazard) and minimal contact with the active ingredient during and after application, exposure to residential occupants is not expected.

4. *Cumulative exposure to substances with common mechanism of toxicity*. Spinosad has not yet been grouped with any other insecticides into a class.

Section 408(b)(2)(D)(v) requires that, when considering whether to establish, modify, or revoke a tolerance, the Agency consider ''available information'' concerning the cumulative effects of a particular pesticide's residues and ''other substances that have a common mechanism of toxicity.'' The Agency believes that ''available information'' in this context might include not only toxicity, chemistry, and exposure data, but also scientific policies and methodologies for understanding common mechanisms of toxicity and conducting cumulative risk assessments. For most pesticides, although the Agency has some information in its files that may turn out to be helpful in eventually determining whether a pesticide shares a common mechanism of toxicity with any other substances, EPA does not at this time have the methodologies to resolve the complex scientific issues concerning common mechanism of toxicity in a meaningful way. EPA has begun a pilot process to study this issue further through the examination of particular classes of pesticides. The Agency hopes that the results of this pilot process will increase the Agency's scientific understanding of this question such that EPA will be able to develop and apply scientific principles for better determining which chemicals have a common mechanism of toxicity and evaluating the cumulative effects of such chemicals. The Agency anticipates, however, that even as its understanding of the science of common mechanisms increases, decisions on specific classes of chemicals will be heavily dependent on chemical specific data, much of which may not be presently available.

Although at present the Agency does not know how to apply the information in its files concerning common mechanism issues to most risk assessments, there are pesticides as to which the common mechanism issues can be resolved. These pesticides include pesticides that are toxicologically dissimilar to existing chemical substances (in which case the Agency can conclude that it is unlikely that a pesticide shares a common mechanism of activity with other substances) and pesticides that produce a common toxic metabolite (in which case common mechanism of activity will be assumed).

EPA does not have, at this time, available data to determine whether spinosad has a common mechanism of toxicity with other substances or how to include this pesticide in a cumulative risk assessment. Unlike other pesticides for which EPA has followed a cumulative risk approach based on a common mechanism of toxicity, spinosad does not appear to produce a toxic metabolite produced by other substances. For the purposes of these tolerance actions, therefore, EPA has not assumed that spinosad has a common mechanism of toxicity with other substances.

D. Aggregate Risks and Determination of Safety for U.S. Population

Chronic risk. Using the TMRC exposure assumptions described in Unit I.B. of this Preamble, EPA has concluded that aggregate exposure to spinosad from food will utilize 24% of the RfD for the U.S. population. For the most highly exposed populations subgroup, children (1-6 years old) and non-Hispanic others, chronic dietary (food only) exposure occupies 34% and 37% of the RfD, respectively. This is a conservative risk estimate for reasons described above. EPA generally has no concern for exposures below 100% of the RfD because the RfD represents the level at or below which daily aggregate dietary exposure over a lifetime will not pose appreciable risks to human health. The chronic DWLOC for the infants and children subgroup is 170 ppb. The chronic modeling estimates (EECs) for spinosad residues in surface water are as high as 0.092 ppb from use on Brassica leafy vegetables. The maximum estimated concentrations of spinosad in surface water are less than EPA's levels of concern for spinosad in drinking water as a contribution to chronic aggregate exposure. Taking into account present uses and uses proposed in this risk assessment, EPA concludes with reasonable certainty that residues of spinosad in drinking water (when considered along with other sources of exposure for which EPA has reliable data) would not result in unacceptable levels of aggregate human health risk at this time. Therefore, the Agency concludes that there is a reasonable certainty that no harm will result from chronic aggregate exposure to spinosad residues from food and water.

No dermal or inhalation endpoints were identified. Due to the nature of the non-dietary use, EPA believes that the use of spinosad in treating structural lumber will not result in any exposure through the oral route. Therefore, the chronic aggregate risk is the sum of food and water.

E. Aggregate Cancer Risk for U.S. Population

The RfD Committee determined that there is no evidence of carcinogenicity in studies in either the mouse or rat. Therefore, a carcinogenic risk assessment is not required.

F. Aggregate Risks and Determination of Safety for Infants and Children

1. *Safety factor for infants and children*— i. *In general*. In assessing the potential for additional sensitivity of infants and children to residues of spinosad, EPA considered data from developmental toxicity studies in the rat and rabbit and a two-generation reproduction study in the rat. The developmental toxicity studies are designed to evaluate adverse effects on the developing organism resulting from pesticide exposure during prenatal development to one or both parents. Reproduction studies provide information relating to effects from exposure to the pesticide on the reproductive capability of mating animals and data on systemic toxicity.

FFDCA section 408 provides that EPA shall apply an additional tenfold margin of safety for infants and children in the case of threshold effects to account for pre-and post-natal toxicity and the completeness of the database unless EPA determines that a different margin of safety will be safe for infants and children. Margins of safety are incorporated into EPA risk assessments either directly through use of a MOE analysis or through using uncertainty (safety) factors in calculating a dose level that poses no appreciable risk to humans. EPA believes that reliable data support using the standard MOE and uncertainty factor (usually 100 for combined inter- and intra-species variability) and not the additional tenfold MOE/uncertainty factor when EPA has a complete data base under existing guidelines and when the severity of the effect in infants or children or the potency or unusual toxic properties of a compound do not raise concerns regarding the adequacy of the standard MOE/safety factor.

ii. *Developmental toxicity studies*. a. In a prenatal developmental toxicity study, groups of pregnant Sprague-Dawley rats (30/group) received oral (gavage) administration of spinosad (88.6%) in aqueous 0.5% methycellulose at dose levels of 0,10, 50, 200 mg/kg/day during gestation days 6 through 17. For maternal toxicity, the NOEL was ≥200 mg/kg/day (HDT); a LOEL was not established. Marginal maternal toxicity was reported at this dose level (decreased body weight gain). Based upon the results of a range-finding study, which showed maternal toxicity (body weight and food consumption decreases at 100 and 300 mg/kg/day), the dose level of 200 mg/kg/day in the main study was considered adequate. For developmental toxicity, the NOEL was >200 mg/kg/day; a LOEL was not established. In the range-finding study, fetal body weight decrements occurred at 300 mg/kg/day.

b. In a prenatal developmental toxicity study, groups of pregnant New Zealand White rabbits (20/group) received oral (gavage) administration of spinosad (88.6%) in 0.5% aqueous methyl cellulose at doses of 0, 2.5, 10, or 50 mg/kg/day during gestation days 7 through 19. For maternal toxicity, the NOEL was ≥50 mg/kg/day (HDT); a LOEL was not established. At this dose, slight body weight loss was observed in the first few days of dosing, but this finding was not supported by other signs. In the range-finding study, inanition was observed at doses of 100, 200, and 400 mg/kg/day, with significant decreases in body weight gain during dosing. All does at these dose levels were sacrificed prior to scheduled termination; no fetal data were available. No evidence of developmental toxicity was noted. For developmental toxicity, the NOEL was ≥50 mg/kg/day; a LOEL was not established. (No fetal effects were noted for fetuses of the range-finding study at doses up to 50 mg/kg/day).

iii. *Reproductive toxicity study*. In a two-generation reproduction study, groups of Sprague-Dawley rats (30/sex/group) received diets containing spinosad (88%) at dose levels of 0, 0.005, 0.02, or 0.2% (3, 10, or 10 mg/kg/day, respectively) for two successive generations. For parental systemic toxicity, the NOEL was 0.02% (10 mg/kg/day) and the LOEL was 0.2% (100 mg/kg/day), based on increased heart, kidney, liver, spleen, and thyroid weights (both sexes), histopathology in the spleen and thyroid (both sexes), heart and kidney (males), and histopathologic lesions in the lungs and mesenteric lymph nodes (both sexes), stomach (females), and prostate. For offspring toxicity, the NOEL was 0.02% (10 mg/kg/day) and the LOEL was 0.2% (100 mg/kg/day) based on decreased litter size, survival (F2), and body weights. Reproductive effects at that dose level included increased incidence of dystocia and/or vaginal bleeding after parturition with associated increase in mortality of dams.

iv. *Neurotoxicity*. a. In an acute neurotoxicity study, groups of Fischer 344 rats (10/sex/dose) received a single oral (gavage) administration of spinosad (87.9%) at dose levels of 0, 200, 630, or 2,000 mg/kg. There were no effects on neurobehavioral endpoints or histopathology of the nervous system. For neurotoxicity, the NOEL was >2,000 mg/kg (HDT); a LOEL was not established.

b. In a subchronic neurotoxicity study, groups of Fisher 344 rats (10/sex/dose) were administered diets containing spinosad at levels of 0, 0.003, 0.006, 0.012, or 0.06% (0, 2.2, 4.3, 8.6, or 42.7 mg/kg/day for males and 2.6, 5.2, 10.4, or 52.1 mg/kg/day for females, respectively). There were no effects on neurobehavioral endpoints or histopathology of the nervous system. For neurotoxicity, the NOEL was ≥42.7 for males and ≥52.1 mg/kg/day for females (HDT).

c. In the 2-year chronic toxicity study, groups of Fischer 344 rats (65/sex/dose) received diets containing spinosad at dose levels of 0, 0.005, 0.02, 0.05, or 0.1% (0, 2.4, 9.5, 24.1, or 49.4 mg/kg/day for males and 0, 3.0, 12.0, 30.3, or 62.2 mg/kg/day for females, respectively). Neurobehavioral testing performed at 3, 6, 9, and 12 months of study was negative, and histopathological evaluation of perfused tissues at study termination did not identify pathology of the central or peripheral nervous system. There was no evidence of neurotoxicity. For neuropathology, the NOEL was 0.1% (>49.4 mg/kg/day for males and 62.8 mg/kg/day for females).

v. *Pre- and post-natal sensitivity*. There was no increased susceptibility to rats or rabbits following in utero and/or postnatal exposure to spinosad.

vi. *Conclusion*. The data provided no indication of increased susceptibility of rats or rabbits to in utero and/or postnatal exposure to spinosad. In the prenatal developmental toxicity studies in rats and rabbits and the two-generation reproduction study in rats, effects in the offspring were observed only at or below treatment levels which resulted in evidence of parental toxicity. In addition, all neurotoxicity studies were negative for effects on the central or peripheral nervous system.

EPA determined that the 10X factor to account for enhanced sensitivity of infants and children (as required by FQPA) should be removed. The FQPA factor is removed because:

(i) The data provided no indication of increased susceptibility of rats or rabbits to in utero and/or post natal exposure to spinosad. In the prenatal developmental toxicity studies in rats and rabbits and the two-generation reproduction study in rats, effects in the offspring were observed only at or below treatment

levels which resulted in evidence of parental toxicity.

(ii) No neurotoxic signs have been observed in any of the standard required studies conducted.

(iii) The toxicology data base is complete and there are no data gaps.

2. *Acute risk.* An acute risk assessment is not required because no acute toxicological endpoints were identified for spinosad.

3. *Chronic risk.* Using the conservative exposure assumptions described above, EPA has concluded that aggregate exposure to spinosad from food will utilize 34% of the RfD for children age 1-6 years old. EPA generally has no concern for exposures below 100% of the RfD because the RfD represents the level at or below which daily aggregate dietary exposure over a lifetime will not pose appreciable risks to human health. EPA concludes that there is a reasonable certainty that no harm will result to infants and children from aggregate exposure to spinosad residues.

G. Endocrine Disruption

EPA is required to develop a screening program to determine whether certain substances (including all pesticides and inerts) ''may have an effect in humans that is similar to an effect produced by a naturally occurring estrogen, or such other endocrine effect...'' The Agency is currently working with interested stakeholders, including other government agencies, public interest groups, industry and research scientists in developing a screening and testing program and a priority setting scheme to implement this program. Congress has allowed 3 years from the passage of FQPA (August 3, 1999) to implement this program. At that time, EPA may require further testing of this active ingredient and end use products for endocrine disrupter effects.

III. Other Considerations

A. Metabolism In Plants and Animals

EPA has reviewed the results of plant metabolism studies (apples, cabbage, cotton, tomatoes, turnips) and livestock metabolism studies (goat and hen). The metabolism of spinosad in plants and animals is adequately understood for the purposes of these tolerances. Based on structure/activity relationships, EPA concluded that the spinosad metabolites/fermentation impurities (spinosyns Factor B, Factor B or D, Factor K, and other related Factors) were of no more toxicological concern than the two parent compounds (spinosyns Factor A and Factor D).

EPA focused on the following data/information: the overall low toxicity of spinosad; the low levels of metabolites/fermentation impurities present; and that spinosad appears to photodegrade rapidly and become incorporated into the general carbon pool. EPA concluded that only 2 parent compounds (spinosyns Factor A and Factor D) need to be included in the tolerance expression and used for dietary risk assessment purposes.

B. Analytical Enforcement Methodology

Method GRM 94.02 (method for determination of spinosad residues in cottonseed and related commodities using HPLC/UV) underwent successful independent lab validation and EPA lab validation and has been submitted to FDA for inclusion in PAM II as Method I. Additional methods have been submitted for other crop matrices (leafy vegetables - GRM 95.17; citrus - GRM 96.09; tree nuts - GRM 96.14; fruiting vegetables - GRM 95.04; and cotton gin byproducts - GRM 94.02.S1). All of these methods are essentially similar to GRM 94.02 and have been submitted to FDA for inclusion in PAM II as letter methods. These methods are adequate for regulation of the tolerance expression.

Method RES 94094 (method for determination of spinosad residues in ruminant commodities using HPLC/UV) underwent successful independent lab validation and EPA lab validation. This method is adequate for regulation of the tolerance expression.

Method RES 95114 (method for determination of spinosad residues in ruminant commodities using immunoassay) underwent successful independent lab validation and EPA lab validation.This method is adequate for regulation of the tolerance expression.

C. Magnitude of Residues

Adequate residue data were provided to support tolerances of 0.02 ppm for almonds; 2.0 ppm for almond hulls; 0.2 for apples; 2.0 ppm for the head and stem subgroup of the Brassica leafy vegetables crop group; 10.0 ppm for the greens subgroup of the Brassica leafy vegetables crop group; 0.3 ppm for the citrus fruits crop group; 0.02 ppm on cottonseed; 1.5 ppm on cotton gin byproducts; 0.4 ppm for the fruiting vegetables (except cucurbit vegetables) crop group; and, 8.0 ppm for the leafy vegetables (except Brassica vegetables) crop group.

Processing data provided for apples indicated concentration of residues in wet apple pomace. Based on the concentration factor of 5.6X and the highest average field trial (HAFT) residue level of 0.089 ppm for apples, the data support a tolerance of 0.5 ppm for wet apple pomace.

Processing data provided for citrus indicated concentration of residues in dried citrus pulp and citrus oil. Based on the concentration factor of 2.4X in dried pulp and 12.7X in oil and the highest average field trial (HAFT) residue level of 0.200 ppm for oranges, the data support tolerances of 0.5 ppm for dried citrus pulp and 3.0 ppm for citrus oil.

Processing data provided for cottonseed did not indicate any concentration of residues in meal or hulls. No tolerances are required for processed cotton commodities.

There are no livestock feedstuffs associated with Brassica leafy vegetables, fruiting vegetables, and leafy vegetables.

A ruminant feeding study was submitted. Based on the results of this study, the data support the following tolerances: fat (or cattle, goats, hogs, horses, and sheep) at 0.6 ppm; meat (of cattle, goats, hogs, horses, and sheep) at 0.04 ppm; meat byproducts (of cattle, goats, hogs, horses, and sheep) at 0.2 ppm; milk fat at 0.5 ppm; and whole milk at 0.04 ppm. These levels are adequate for the feed items associated with all existing and proposed uses covered in this risk assessment.

Requirements for a poultry feeding study have been waived based on the minimal impact of spinosad residues in a typical poultry diet.

D. International Residue Limits

No CODEX, Canadian, or Mexican MRLs have been established for residues of spinosad on any crops.

IV. Conclusion

Therefore, the tolerances are established for residues of spinosad in almonds at 0.02 ppm; almond hulls at 2.0 ppm; apples at 0.2 ppm; apple pomace, wet at 0.5 ppm; citrus fruits group at 0.3 ppm; citrus pulp, dried at 0.5 ppm; citrus oil at 3.0 ppm; cottonseed at 0.02 ppm; cotton gin byproducts at 1.5 ppm; fruiting vegetables (except cucurbits) group at 0.4 ppm; Brassica (cole), leafy vegetables, head and stem subgroup at 2.0 ppm; Brassica (cole), leafy vegetables, greens subgroup at 10.0 ppm; leafy vegetables (except Brassica vegetables) group at 8.0 ppm; fat of cattle, goats, hogs, horses, and sheep at 0.6 ppm; meat of cattle goats, hogs, horses, and sheep at 0.04; meat byproducts of cattle, goats, hogs, horses, and sheep at 0.2 ppm; milk fat at 0.5 ppm; and whole milk at 0.04 ppm.

In addition, EPA is removing the time limitation for the tolerance for residues of spinosad on cottonseed. Also, EPA is removing the time limited tolerances established under section 408(1)(6) of the FFDCA, as amended by FQPA, in 40 CFR 180.495 (b) Section 18 emergency exemptions.

V. Objections and Hearing Requests

The new FFDCA section 408(g) provides essentially the same process for persons to ''object'' to a tolerance regulation issued by EPA under new section 408(e) and (l)(6) as was provided in the old section 408 and in section 409. However, the period for filing objections is 60 days, rather than 30 days. EPA currently has procedural regulations which govern the submission of objections and hearing requests. These regulations will require some modification to reflect the new law. However, until those modifications can be made, EPA will continue to use those procedural regulations with appropriate adjustments to reflect the new law.

Any person may, by June 15, 1998, file written objections to any aspect of this regulation and may also request a hearing on those objections. Objections and hearing requests must be filed with the Hearing Clerk, at the address given above (40 CFR 178.20). A copy of the objections and/or hearing requests filed with the Hearing Clerk should be submitted to the OPP docket for this rulemaking. The objections submitted must specify the provisions of the regulation deemed objectionable and the grounds for the objections (40 CFR 178.25). Each objection must be accompanied by the fee prescribed by 40 CFR 180.33(i). If a hearing is requested, the objections must include a statement of the factual issues on which a hearing is requested, the requestor's contentions on such issues, and a summary of any evidence relied upon by the requestor (40 CFR 178.27). A request for a hearing will be granted if the Administrator determines that the material submitted shows the following: There is genuine and substantial issue of fact; there is a reasonable possibility that available evidence identified by the requestor would, if established, resolve one or more of such issues in favor of the requestor, taking into account uncontested claims or facts to the contrary; and resolution of the factual issues in the manner sought by the requestor would be adequate to justify the action requested (40 CFR 178.32). Information submitted in connection with an objection or hearing request may be claimed confidential by marking any part or all of that information as CBI. Information so marked will not be disclosed except in accordance with procedures set forth in 40 CFR part 2. A copy of the information that does not contain CBI must be submitted for inclusion in the public record. Information not marked confidential may be disclosed publicly by EPA without prior notice.

VI. Public Docket

EPA has established a record for this rulemaking under docket control number [OPP–300644] (including any comments and data submitted electronically). A public version of this record, including printed, paper versions of electronic comments, which does not include any information claimed as CBI, is available for inspection from 8:30 a.m. to 4 p.m., Monday through Friday, excluding legal holidays. The public record is located in Room 119 of the Public Information and Records Integrity Branch, Information Resources and Services Division (7502C), Office of Pesticide Programs, Environmental Protection Agency, Crystal Mall #2, 1921 Jefferson Davis Highway, Arlington, VA.

Electronic comments may be sent directly to EPA at:

opp-docket@epamail.epa.gov.

Electronic comments must be submitted as an ASCII file avoiding the use of special characters and any form of encryption.

The official record for this rulemaking, as well as the public version, as described above will be kept in paper form. Accordingly, EPA will transfer any copies of objections and hearing requests received electronically into printed, paper form as they are received and will place the paper copies in the official rulemaking record which will also include all comments submitted directly in writing. The official rulemaking record is the paper record maintained at the Virginia address in ''ADDRESSES'' at the beginning of this document.

VII. Regulatory Assessment Requirements

This final rule establishes tolerances under FFDCA section 408(d) in response to a petition submitted to the Agency. The Office of Management and Budget (OMB) has exempted these types of actions from review under Executive Order 12866, entitled Regulatory Planning and Review (58 FR 51735, October 4, 1993). This final rule does not contain any information collections subject to OMB approval under the Paperwork Reduction Act (PRA), 44 U.S.C. 3501 *et seq.*, or impose any enforceable duty or contain any unfunded mandate as described under Title II of the Unfunded Mandates Reform Act of 1995 (UMRA) (Pub. L. 104-4). Nor does it require any prior consultation as specified by Executive Order 12875, entitled Enhancing the Intergovernmental Partnership (58 FR 58093, October 28, 1993), or special considerations as required by Executive Order 12898, entitled Federal Actions to Address Environmental Justice in Minority Populations and Low-Income Populations (59 FR 7629, February 16, 1994), or require OMB review in accordance with Executive Order 13045, entitled Protection of Children from Environmental Health Risks and Safety Risks (62 FR 19885, April 23, 1997).

In addition, since these tolerances and exemptions that are established on the basis of a petition under FFDCA section 408(d), such as the tolerances in this final rule, do not require the issuance of a proposed rule, the requirements of the Regulatory Flexibility Act (RFA) (5 U.S.C. 601 *et seq.*) do not apply. Nevertheless, the Agency has previously assessed whether establishing tolerances, exemptions from tolerances, raising tolerance levels or expanding exemptions might adversely impact small entities and concluded, as a generic matter, that there is no adverse economic impact. The factual basis for the Agency's generic certification for tolerance actions published on May 4, 1981 (46 FR 24950) and was provided to the Chief Counsel for Advocacy of the Small Business Administration.

VIII. Submission to Congress and the Comptroller General

The Congressional Review Act, 5 U.S.C. 801 *et seq.*, as added by the Small Business Regulatory Envorcement Fairness Act of 1996, generally provides that before a rule may take effect, the agency promulgating the rule must submit a rule report, which includes a copy of the rule, to each House of the Congress and to the Comptroller General of the United States. EPA will submit a report containing this rule and other required information to the U.S. Senate, the U.S. House of Representatives, and the Comptroller General of the United States prior to publication of the rule in the **Federal Register**. This rule is not a ''major rule'' as defined by 5 U.S.C. 804(2).

List of Subjects in 40 CFR Part 180

Environmental protection, Administrative practice and procedure, Agricultural commodities, Pesticides and pests, Reporting and recordkeeping requirements.

Dated: April 9, 1998.

James Jones,

Director, Registration Division, Office of Pesticide Programs.

Therefore, 40 CFR chapter I is amended as follows:

PART 180—[AMENDED]

1. The authority citation for part 180 continues to read as follows:

Authority : 21 U.S.C. 346a and 371.

2. In § 180.495, paragraphs (a) and (b) are revised to read as follows:

§ 180.495 Spinosad; tolerances for residues.

(a) *General.* Tolerances are established for residues of the insecticide Spinosad. Factor A is 2-[(6-deoxy-2,3,4-tri-*O*-methyl-α-*L*-manno-pyranosyl)oxy]-13-[[5-(dimethylamino)-tetrahydro-6-methyl-2H-pyran-2-yl]oxy]-9-ethyl-2,3,3a,5a,5b,6,9,10,11,12,13,14,16a,6b-tetradecahydro-14-methyl-1*H*-as-Indaceno[3,2-d]oxacyclododecin-7,15-dione. Factor D is 2-[(6-deoxy-2,3,4-tri-*O*-methyl-α-*L*-manno-pyranosyl)oxy]-13-[[5-(dimethylamino)-tetrahydri-6-methyl-2*H*-pyran-2-yl]oxy]-9-ethyl-2,3,3a,5a,5b,6,9,10,11,12,13,14,16a,16b-tetradecahydro-4,14-dimethyl-1*H*-as-Indaceno[3,2-d]oxacyclododecin-7,15-dione.

Commodity	Parts per million
Almonds	0.02
Almond hulls	2.0
Apples	0.2
Apple pomace, wet	0.5
Brassica (cole), leafy vegetables, greens subgroup	10.0
Brassica (cole), leafy vegetables, head and stem subgroup	2.0
Cattle, fat	0.6
Cattle, mbyp	0.2
Cattle, meat	0.04
Citrus fruits group	0.3
Citrus oil	3.0
Citrus pulp, dried	0.5
Cotton gin byproducts	1.5
Cottonseed	0.02
Fruiting vegetables (except cucurbits) group	0.4
Goat, fat	0.6
Goat, mbyp	0.2
Goat, meat	0.04
Hogs, fat	0.6
Hogs, mbyp	0.2
Hogs, meat	0.04
Horses, fat	0.6
Horses, mbyp	0.2
Horses, meat	0.04
Leafy vegetables (except Brassica vegetables) group	8.0
Milk, fat	0.5
Milk, whole	0.04
Sheep, fat	0.6
Sheep, mbyp	0.2
Sheep, meat	0.04

(b) *Section 18 emergency exemptions.* [Reserved]

* * * * *

[FR Doc. 98–10023 Filed 4–14–98; 8:45 am]

BILLING CODE 6560–50–F

DEPARTMENT OF THE INTERIOR

Bureau of Land Management

43 CFR Part 4700

[NV–960–1060–00–24–1A]

RIN 1004–AD28

Wild Horse and Burro Adoptions; Power of Attorney

AGENCY: Bureau of Land Management, Interior.

ACTION: Final rule.

SUMMARY: The Bureau of Land Management is amending its regulations to prohibit anyone from adopting wild horses and burros on behalf of another person using a written authorization to act as that person's agent or attorney (power of attorney). This action is necessary to implement a portion of a court-approved settlement agreement between BLM and the Animal Protection Institute of America, Inc. The effect of this action is to eliminate the potential for adopters to misuse the power of attorney to obtain large numbers of wild horses and burros for commercial sale.

DATES: This rule is effective May 15, 1998.

FOR FURTHER INFORMATION CONTACT: Bud Cribley, (202) 452–5073; or Lili Thomas, (702) 785–6457.

SUPPLEMENTARY INFORMATION:

I. Background
II. Discussion of the Final Rule and Response to Comments
III. Procedural Matters

I. Background

In 1971, Congress passed legislation to protect, manage, and control wild horses and burros on the public lands. The Wild Free-Roaming Horses and Burros Act (WHA) declared these animals to be ''living symbols of the historic and pioneer spirit of the West.'' Pub. L. 92–195, section 1, 85 Stat. 649 (1971) (current version at 16 U.S.C. 1331 (1994)). Congress further declared that all wild free-roaming horses and burros are under the jurisdiction of the Secretary of the Interior for the purpose of management and protection, and that the Secretary shall manage them in a manner that is designed to achieve and maintain a thriving natural ecological balance on the public lands. 16 U.S.C. 1333(a). Section 3(b) of the WHA authorized the Secretary, where an area is found to be overpopulated, to cause additional excess wild free-roaming horses and burros to be captured and removed for private maintenance under humane conditions and care. Congress also authorized the Secretary to issue such regulations as the Secretary deems necessary to further the purposes of the law. 16 U.S.C. 1336.

The WHA protected wild horses and burros so well that within a few years their numbers exceeded the carrying capacity of the Western rangelands and posed a threat to wildlife, livestock, and the improvement of range conditions. To correct this problem, in 1978, Congress passed amendments to the WHA as part of the Public Rangelands Improvement Act. Pub. L. 95–514, section 14, 92 Stat. 1803, 1808 (1978) (current version at 16 U.S.C. 1333(b)–(d)). The amendments sought to facilitate humane adoption of excess animals by allowing adopters to take title to up to 4 animals per year after having successfully cared for them for one year. 16 U.S.C. 1333(c). Under the amendments, individuals can adopt (but not take title to) more than 4 animals per year if the Secretary finds they can humanely care for more than four. 16 U.S.C. 1333(b)(2)(B).

To carry out this mandate, the Secretary, acting through BLM, issued regulations governing, among other things, the adoption process and who is eligible to adopt animals removed from the public lands. These regulations were proposed in 1984 (49 FR 49252, December 18, 1984) and adopted in 1986 (51 FR 7410, March 3, 1986). See 43 CFR part 4700 (1997). The 1986 regulations limited adoptions to four animals per year per person, but also allowed a person to adopt animals on behalf of another person through the use of a power of attorney. A power of attorney is a written document that authorizes one person to act as an agent or attorney for another. Under the existing regulations, one agent could get powers of attorney from several people and adopt more animals than any one person is allowed to adopt.

As discussed in the proposed rule, several investigations of adopters of

large numbers of animals through power of attorney indicate that individuals have obtained large numbers of animals to sell them for profit. In some cases, the investigations have found that adopted animals have been held in substandard, if not inhumane, conditions awaiting transfer of title from BLM to the adopters of record and subsequent sale or slaughter. While BLM was working on a proposal to address this potential for abuse, the Animal Protection Institute of America, Inc. (API) initiated legal action concerning a number of issues related to the adoption program. As a result, BLM and API entered into a settlement agreement in October 1997 that, among other things, requires BLM to propose a regulation eliminating the use of powers of attorney in the adoption program.

On November 10, 1997, BLM published a proposed rule in the **Federal Register** that would have revised existing paragraph 43 CFR 4750.3–3(b) to read, ''The Bureau of Land Management will not allow the use of a power of attorney for the adoption of wild horses and burros.'' 62 FR 60467. The proposal would also have deleted existing paragraph 43 CFR 4750.3–3(c) which outlined the information that a person holding a power of attorney and adopting more than four animals had to provide. By proposing to specifically disallow use of power of attorney in paragraph (b), the proposal rendered the information requirements in paragraph (c) superfluous. As discussed in the proposed rule, the intent of these changes was to eliminate the use of power of attorney.

The 60-day comment period closed on January 9, 1998. BLM received 12 comment letters and electronic mail messages. Seven of the comments were from representatives of animal-advocacy organizations; the other five came from individuals, one of whom identified herself as an individual adopter. Ten of the comments were supportive of the proposal; two of these offered specific changes to the proposed text. Two comments, both from individuals, disagreed with the proposal. See the discussion of comments in the next section.

II. Discussion of Final Rule and Response to Comments

A. Legal Basis for the Final Rule

The Wild Free-Roaming Horses and Burros Act, as amended, authorizes the Secretary of the Interior to issue such regulations as the Secretary deems necessary to further the purposes of the law. 16 U.S.C. 1336. The law also provides that excess animals be removed for private maintenance and care (adoption) provided that the Secretary can assure humane treatment and care. 16 U.S.C. 1333(b)(2)(B). The final rule adopted today is narrowly focused on ensuring that adopted animals receive humane treatment and care. The use of power of attorney to adopt large numbers of animals has been shown in specific cases to result in either mistreatment of the animals or abuse of the adoption program for the purpose of profiting from the sale of adopted animals, or both. These outcomes are clearly inconsistent with the spirit and intent of the Wild Free-Roaming Horses and Burros Act, as amended. To prevent these outcomes from occurring again in the future, BLM believes that its regulations should be changed, and the final rule adopted today is consistent with that position. BLM is adopting changes to its regulations that will prevent specific results while avoiding, to the extent possible and foreseeable, unintended negative impacts on legitimate individual adopters of wild horses and burros. Based on BLM's analysis of the issues involved, taking into account the purposes of the statutes and the administrative record of this rulemaking, including comments received from the public, this final rule is a proper and reasonable interpretation of the Wild Free-Roaming Horses and Burros Act.

B. General Comments

Ten commenters supported the proposal because, in their view, it would:

—Reduce abuse of animals after adoption,
—Eliminate an opportunity for monetary gain from adoptions,
—Prevent illegal profit from animals,
—Prevent adoption of large numbers of animals for commercial gain,
—Reduce BLM's costs for compliance inspections,
—Remove the incentive to adopt for commercial purposes,
—Prevent misuse of the program,
—Enable BLM to visit all adopters,
—Prevent the slaughter of animals, and
—Ensure successful adoptions.

BLM generally agrees with these comments.

Two commenters disagreed with the proposal. One did not state a reason for her disagreement. The other asserted that the proposal amounted to only a trivial correction of the regulations and proposed a number of changes to other provisions of the existing regulations. BLM does not agree that the proposal was trivial. Elimination of the use of power of attorney in the adoption program is a significant change to regulations that have been in place for over a decade. As discussed above and in the proposed rule, this change eliminates a significant potential for abuse of the program.

BLM has decided not to adopt the other changes suggested by the commenter at this time. Under the Administrative Procedures Act, an agency must publish notice of a proposed rulemaking in the **Federal Register**, including ''either the terms or substance of the proposed rule or a description of the subjects and issues involved.'' 5 U.S.C. 553(b). The November 10, 1997 proposal only addressed the issue of use of power of attorney in the adoption program. Thus, the public did not have notice and opportunity to comment on other aspects of the program addressed by this commenter, such as when BLM should allow title to an animal to pass to an adopter. The specific changes recommended by the commenter pertain to issues outside the scope of the proposal. Therefore, it would not be proper for BLM to adopt those changes at this time. However, BLM has taken the commenter's recommendations under advisement and may, in the future, initiate a rulemaking that addresses those issues.

C. Specific Comments

One commenter suggested that in cases where a person would have to travel a long distance to the site of an adoption facility, it would be convenient to allow that person to use a power of attorney. The commenter suggested limiting the potential for abuse by allowing power of attorney ''to be used for one person for one horse (or burro).'' BLM has decided not to adopt this suggestion because it would not eliminate the potential for abuse. Elimination of use of power of attorney for adoption essentially limits qualified adopters to those individuals who are willing and able to travel to the adoption location. Adopting a horse or burro is a serious endeavor that entails a significant commitment of time and money. BLM does not believe that having to travel to the adoption location will be a hindrance to those who are undertaking the larger commitment to humane care and treatment.

One commenter suggested adding to the proposal language that would preclude, in addition to power of attorney, ''any other instrument or writing authorizing another person to act as an agent.'' The intent of the change is to clarify that no document in

which one person gives authority to another to act as an agent, whether or not it is styled ''power of attorney,'' will be acceptable for purposes of adoption of wild horses and burros. BLM has decided to accept this clarification. Consequently, the final rule provides that, ''[BLM] will not allow the use of a power of attorney or any other instrument or writing authorizing one person to act as an agent for another in the adoption of wild horses and burros.''

III. Procedural Matters

National Environmental Policy Act

BLM has prepared an environmental assessment (EA) and has found that this final rule will not constitute a major Federal action significantly affecting the quality of the human environment under section 102(2)(C) of the National Environmental Policy Act of 1969, 42 U.S.C. 4332(2)(C). BLM has placed the EA and the Finding of No Significant Impact (FONSI) on file in the BLM Administrative Record, Room 401, 1620 L Street, NW, Washington, D.C. To obtain a copy, please contact one of the individuals listed under **FOR FURTHER INFORMATION CONTACT**.

Paperwork Reduction Act

This rule does not contain information collection requirements that the Office of Management and Budget must approve under the Paperwork Reduction Act, 44 U.S.C. 3501 *et seq.*

Regulatory Flexibility Act

Congress enacted The Regulatory Flexibility Act of 1980, 5 U.S.C. 601 *et seq.*, to ensure that Government regulations do not unnecessarily or disproportionately burden small entities. The RFA requires a regulatory flexibility analysis if a rule would have a significant economic impact, either detrimental or beneficial, on a substantial number of small entities. This final rule is a technical change to the wild horse and burro adoption regulations to preclude use of power of attorney for adoptions. The rule will prevent some individuals from adopting wild horses and burros if the individuals are unable to travel to the adoption location, select the animals for adoption, and sign the private maintenance and care agreement. However, the power of attorney adoption was used only 12 times in 1997. Therefore, BLM has determined under the RFA that this final rule will not have a significant economic impact on a substantial number of small entities.

Unfunded Mandates Reform Act

Revision of 43 CFR part 4700 will not result in any unfunded mandate to State, local, or tribal governments in the aggregate, or to the private sector, of $100 million or more in any one year.

Executive Order 12612

The final rule will not have a substantial direct effect on the States, on the relationship between the national government and the States, or on the distribution of power and responsibilities among the various levels of government. Therefore, in accordance with Executive Order 12612, BLM has determined that this final rule does not have sufficient federalism implications to warrant preparation of a Federalism Assessment.

Executive Order 12630

The final rule does not represent a government action capable of interfering with constitutionally protected property rights. Therefore, the Department of the Interior has determined that the rule would not cause a taking of private property or require further discussion of takings implications under this Executive Order.

Executive Order 12866

According to the criteria listed in section 3(f) of Executive Order 12866, BLM has determined that the final rule is not a significant regulatory action. As such, the final rule is not subject to Office of Management and Budget review under section 6(a)(3) of the order.

Executive Order 12988

The Department of the Interior has determined that this rule meets the applicable standards provided in sections 3(a) and 3(b)(2) of Executive Order 12988.

Author

The principal author of this final rule is Patrick W. Boyd, Regulatory Affairs Group, Bureau of Land Management, 1849 C Street, NW., Washington, DC 20240; Telephone: (202) 452–5030.

List of Subjects in 43 CFR Part 4700

Animal welfare, Horses, Penalties, Public lands, Range management, Reporting and recordkeeping requirements, Wildlife.

Dated: April 8, 1998.

Sylvia V. Baca,

Deputy Assistant Secretary—Land and Minerals Management.

Accordingly, BLM proposes to amend 43 CFR part 4700 as set forth below:

1. The authority citation for part 4700 continues to read as follows:

Authority: 16 U.S.C. 1331–1340; 18 U.S.C. 47; 43 U.S.C. 315 and 1740.

2. Amend § 4750.3–3 by revising paragraph (b) to read as follows and by removing paragraph (c):

§ 4750.3–3 Supporting information and certification for private maintenance of more than 4 wild horses or burros.

* * * * *

(b) The Bureau of Land Management will not allow the use of a power of attorney or any other instrument or writing authorizing one person to act as an agent for another in the adoption of wild horses and burros.

[FR Doc. 98–10025 Filed 4–14–98; 8:45 am]

BILLING CODE 4310–84–P

Proposed Rules

Federal Register
Vol. 63, No. 72
Wednesday, April 15, 1998

This section of the FEDERAL REGISTER contains notices to the public of the proposed issuance of rules and regulations. The purpose of these notices is to give interested persons an opportunity to participate in the rule making prior to the adoption of the final rules.

DEPARTMENT OF TRANSPORTATION

Federal Aviation Administration

14 CFR Part 39

[Docket No. 97–NM–254–AD]

RIN 2120–AA64

Airworthiness Directives; Boeing Model 747 Series Airplanes

AGENCY: Federal Aviation Administration, DOT.

ACTION: Notice of proposed rulemaking (NPRM).

SUMMARY: This document proposes the adoption of a new airworthiness directive (AD) that is applicable to certain Boeing Model 747 series airplanes. This proposal would require a one-time detailed visual inspection of the outboard sequence carriage attachment fitting for the presence and condition of a shim, and follow-on corrective actions, if necessary. This proposal is prompted by a report that a piece of the left wing inboard foreflap came off during a landing approach. The actions specified by the proposed AD are intended to prevent the failure of the outboard sequence carriage fitting, which could allow the wing inboard foreflap to separate and penetrate the fuselage, possibly injuring passengers and crewmembers.

DATES: Comments must be received by June 1, 1998.

ADDRESSES: Submit comments in triplicate to the Federal Aviation Administration (FAA), Transport Airplane Directorate, ANM–114, Attention: Rules Docket No. 97–NM–254–AD, 1601 Lind Avenue, SW., Renton, Washington 98055–4056. Comments may be inspected at this location between 9:00 a.m. and 3:00 p.m., Monday through Friday, except Federal holidays.

The service information referenced in the proposed rule may be obtained from Boeing Commercial Airplane Group, P.O. Box 3707, Seattle, Washington 98124–2207. This information may be examined at the FAA, Transport Airplane Directorate, 1601 Lind Avenue, SW., Renton, Washington.

FOR FURTHER INFORMATION CONTACT: Tamara L. Dow, Aerospace Engineer, Airframe Branch, ANM–120S, FAA, Transport Airplane Directorate, Seattle Aircraft Certification Office, 1601 Lind Avenue, SW., Renton, Washington 98055–4056; telephone (425) 227–2771; fax (425) 227–1181.

SUPPLEMENTARY INFORMATION:

Comments Invited

Interested persons are invited to participate in the making of the proposed rule by submitting such written data, views, or arguments as they may desire. Communications shall identify the Rules Docket number and be submitted in triplicate to the address specified above. All communications received on or before the closing date for comments, specified above, will be considered before taking action on the proposed rule. The proposals contained in this notice may be changed in light of the comments received.

Comments are specifically invited on the overall regulatory, economic, environmental, and energy aspects of the proposed rule. All comments submitted will be available, both before and after the closing date for comments, in the Rules Docket for examination by interested persons. A report summarizing each FAA-public contact concerned with the substance of this proposal will be filed in the Rules Docket.

Commenters wishing the FAA to acknowledge receipt of their comments submitted in response to this notice must submit a self-addressed, stamped postcard on which the following statement is made: ''Comments to Docket Number 97–NM–254–AD.'' The postcard will be date stamped and returned to the commenter.

Availability of NPRMs

Any person may obtain a copy of this NPRM by submitting a request to the FAA, Transport Airplane Directorate, ANM–114, Attention: Rules Docket No. 97–NM–254–AD, 1601 Lind Avenue, SW., Renton, Washington 98055–4056.

Discussion

The FAA has received a report indicating that a piece of the left wing inboard foreflap came off a Boeing Model 747–200 series airplane during a landing approach and hit the airplane at body stations 1800 through 1840. The damages that occurred were skin punctures, stringer fractures, frame fractures, and the movement of one passenger window. This airplane had an overhauled foreflap that did not have a shim installed between the outboard sequence carriage attachment fitting and the left wing inboard foreflap. The outboard sequence carriage attachment fitting is designed to absorb all side-to-side loads on the inboard foreflap. There is a shim installed on the horizontal flange of the fitting, and there are four bolts that attach this horizontal flange to the foreflap. The shim is installed, to prevent a gap of more the 0.003 inch between the fitting and the foreflap. If a shim is not installed or if the incorrect grip lengths of fasteners are used, the outboard sequence carriage attachment fitting can move due to incorrect clamp-up. This condition, if not corrected, could result in the failure of the outboard sequence carriage fitting, which could allow the wing inboard foreflap to separate and penetrate the fuselage, possibly injuring passengers and crewmembers.

Explanation of Relevant Service Information

The FAA has reviewed and approved Boeing Alert Service Bulletin 747–57A2302, dated April 10, 1997, which describes procedures for a one-time detailed visual inspection of the outboard sequence carriage attachment fitting for the presence and condition of a shim, and follow-on corrective actions, if necessary. The follow-on actions include; replacing any shim that has migrated or is missing with a new or serviceable part; performing a high frequency eddy current inspection for cracking on the fastener holes in the fitting, the foreflap lower spar chord, and on the fitting flange; and replacing cracked or damaged fittings with new or serviceable parts. Accomplishment of the actions specified in the alert service bulletin is intended to adequately address the identified unsafe condition.

Explanation of Requirements of Proposed Rule

Since an unsafe condition has been identified that is likely to exist or develop on other products of this same type design, the proposed AD would

require accomplishment of the actions specified in the alert service bulletin described previously.

Cost Impact

There are approximately 1,147 airplanes of the affected design in the worldwide fleet. The FAA estimates that 311 airplanes of U.S. registry would be affected by this proposed AD, that it would take approximately 1 work hour per airplane to accomplish the proposed inspection, and that the average labor rate is $60 per work hour. Based on these figures, the cost impact of the proposed AD on U.S. operators is estimated to be $18,660, or $60 per airplane.

The cost impact figure discussed above is based on assumptions that no operator has yet accomplished any of the proposed requirements of this AD action, and that no operator would accomplish those actions in the future if this AD were not adopted.

Regulatory Impact

The regulations proposed herein would not have substantial direct effects on the States, on the relationship between the national government and the States, or on the distribution of power and responsibilities among the various levels of government. Therefore, in accordance with Executive Order 12612, it is determined that this proposal would not have sufficient federalism implications to warrant the preparation of a Federalism Assessment.

For the reasons discussed above, I certify that this proposed regulation (1) is not a ''significant regulatory action'' under Executive Order 12866; (2) is not a ''significant rule'' under the DOT Regulatory Policies and Procedures (44 FR 11034, February 26, 1979); and (3) if promulgated, will not have a significant economic impact, positive or negative, on a substantial number of small entities under the criteria of the Regulatory Flexibility Act. A copy of the draft regulatory evaluation prepared for this action is contained in the Rules Docket. A copy of it may be obtained by contacting the Rules Docket at the location provided under the caption **ADDRESSES**.

List of Subjects in 14 CFR Part 39

Air transportation, Aircraft, Aviation safety, Safety.

The Proposed Amendment

Accordingly, pursuant to the authority delegated to me by the Administrator, the Federal Aviation Administration proposes to amend part 39 of the Federal Aviation Regulations (14 CFR part 39) as follows:

PART 39—AIRWORTHINESS DIRECTIVES

1. The authority citation for part 39 continues to read as follows:

Authority: 49 U.S.C. 106(g), 40113, 44701.

§ 39.13 [Amended]

2. Section 39.13 is amended by adding the following new airworthiness directive:

Boeing: Docket 97–NM–254–AD.

Applicability: Model 747–100, 747–200B, 747–200F, 747–200C, 747SR, 47–100B, 747–300, 747–100B SUD, 747–400, 747–400D, and 747–400F series airplanes, having line numbers 1 through 1122 inclusive; certificated in any category.

Note 1: This AD applies to each airplane identified in the preceding applicability provision, regardless of whether it has been modified, altered, or repaired in the area subject to the requirements of this AD. For airplanes that have been modified, altered, or repaired so that the performance of the requirements of this AD is affected, the owner/operator must request approval for an alternative method of compliance in accordance with paragraph (b) of this AD. The request should include an assessment of the effect of the modification, alteration, or repair on the unsafe condition addressed by this AD; and, if the unsafe condition has not been eliminated, the request should include specific proposed actions to address it.

Compliance: Required as indicated, unless accomplished previously.

To prevent the failure of the outboard sequence carriage fitting, which could allow the wing inboard foreflap to separate and penetrate the fuselage, possibly injuring passengers and crewmembers, accomplish the following:

(a) Within 1,500 landings or 18 months after the effective date of this AD, whichever occurs first, perform a one-time detailed visual inspection of the outboard sequence carriage attachment fitting for the presence and condition of a shim, and follow-on corrective actions, if necessary, in accordance with Boeing Alert Service Bulletin 747–57A2302, dated April 10, 1997.

(b) An alternative method of compliance or adjustment of the compliance time that provides an acceptable level of safety may be used if approved by the Manager, Seattle Aircraft Certification Office (ACO), FAA, Transport Airplane Directorate. Operators shall submit their requests through an appropriate FAA Principal Maintenance Inspector, who may add comments and then send it to the Manager, Seattle ACO.

Note 2: Information concerning the existence of approved alternative methods of compliance with this AD, if any, may be obtained from the Seattle ACO.

(c) Special flight permits may be issued in accordance with sections 21.197 and 21.199 of the Federal Aviation Regulations (14 CFR 21.197 and 21.199) to operate the airplane to a location where the requirements of this AD can be accomplished.

Issued in Renton, Washington, on April 8, 1998.

John J. Hickey,

Transport Airplane Directorate, Aircraft Certification Service.

[FR Doc. 98–9877 Filed 4–14–98; 8:45 am]

BILLING CODE 4910–13–U

DEPARTMENT OF TRANSPORTATION

Federal Aviation Administration

14 CFR Part 39

[Docket No. 98–NM–98–AD]

RIN 2120–AA64

Airworthiness Directives; Fokker Model F27 Mark 100, 200, 300, 400, 500, 600, and 700 Series Airplanes

AGENCY: Federal Aviation Administration, DOT.

ACTION: Notice of proposed rulemaking (NPRM).

SUMMARY: This document proposes the adoption of a new airworthiness directive (AD) that is applicable to certain Fokker Model F27 Mark 100, 200, 300, 400, 500, 600, and 700 series airplanes. This proposal would require replacement of the actuating ram bobbin and O-ring seals of the main landing gear (MLG), with new bobbins and improved O-ring seals. This proposal is prompted by issuance of mandatory continuing airworthiness information by a foreign civil airworthiness authority. The actions specified by the proposed AD are intended to prevent loss of dampening of the MLG actuating ram, which could result in failure of the MLG lockstruts, and consequent structural damage to the airplane.

DATES: Comments must be received by May 15, 1998.

ADDRESSES: Submit comments in triplicate to the Federal Aviation Administration (FAA), Transport Airplane Directorate, ANM–114, Attention: Rules Docket No. 98–NM–98–AD, 1601 Lind Avenue, SW., Renton, Washington 98055–4056. Comments may be inspected at this location between 9:00 a.m. and 3:00 p.m., Monday through Friday, except Federal holidays.

The service information referenced in the proposed rule may be obtained from Fokker Services B.V., Technical Support Department, P.O. Box 75047, 1117 ZN Schiphol Airport, the Netherlands. This information may be examined at the FAA, Transport Airplane Directorate, 1601 Lind Avenue, SW., Renton, Washington.

FOR FURTHER INFORMATION CONTACT: Norman B. Martenson, Manager,

International Branch, ANM–116, FAA, Transport Airplane Directorate, 1601 Lind Avenue, SW., Renton, Washington 98055–4056; telephone (425) 227–2110; fax (425) 227–1149.

SUPPLEMENTARY INFORMATION:

Comments Invited

Interested persons are invited to participate in the making of the proposed rule by submitting such written data, views, or arguments as they may desire. Communications shall identify the Rules Docket number and be submitted in triplicate to the address specified above. All communications received on or before the closing date for comments, specified above, will be considered before taking action on the proposed rule. The proposals contained in this notice may be changed in light of the comments received.

Comments are specifically invited on the overall regulatory, economic, environmental, and energy aspects of the proposed rule. All comments submitted will be available, both before and after the closing date for comments, in the Rules Docket for examination by interested persons. A report summarizing each FAA-public contact concerned with the substance of this proposal will be filed in the Rules Docket.

Commenters wishing the FAA to acknowledge receipt of their comments submitted in response to this notice must submit a self-addressed, stamped postcard on which the following statement is made: ''Comments to Docket Number 98–NM–98–AD.'' The postcard will be date stamped and returned to the commenter.

Availability of NPRMs

Any person may obtain a copy of this NPRM by submitting a request to the FAA, Transport Airplane Directorate, ANM–114, Attention: Rules Docket No. 98–NM–98–AD, 1601 Lind Avenue, SW., Renton, Washington 98055–4056.

Discussion

The Rijksluchtvaartdienst (RLD), which is the airworthiness authority for the Netherlands, notified the FAA that an unsafe condition may exist on certain Fokker Model F27 Mark 100, 200, 300, 400, 500, 600, and 700 series airplanes. The RLD advises that it received reports of broken lockstruts on the main landing gear (MLG) due to loss of dampening of the MLG actuating ram, which extends and retracts the MLG. The actuating ram is equipped with a dampening chamber filled with silicon fluid (oil), which is forced through a restrictor to dampen gear movement. The existing design of the O-ring seals could allow fluid to leak gradually, which may not be noticed during regular maintenance inspections, and could lead to loss of dampening of the MLG actuating ram. This condition, if not corrected, could result in failure of the MLG lockstruts, and consequent structural damage to the airplane.

Explanation of Relevant Service Information

The manufacturer has issued Fokker Service Bulletin F27/32–168, dated October 23, 1996, which describes procedures for replacing the actuating ram bobbin, O-ring seals, and back-up O-ring seals of the MLG, with new bobbins and improved O-ring seals. The service bulletin references Dunlop Equipment Division Service Bulletin SB 32–1142, dated October 22, 1996, as an additional source of service information to accomplish the modification. Accomplishment of the actions specified in the service bulletin is intended to adequately address the identified unsafe condition. The RLD classified this service bulletin as mandatory and issued Dutch airworthiness directive 1996–142 (A), dated November 29, 1996, in order to assure the airworthiness of these airplanes in the Netherlands.

FAA's Conclusions

These airplane models are manufactured in the Netherlands and are type certificated for operation in the United States under the provisions of Section 21.29 of the Federal Aviation Regulations (14 CFR 21.29) and the applicable bilateral airworthiness agreement. Pursuant to this bilateral airworthiness agreement, the RLD has kept the FAA informed of the situation described above. The FAA has examined the findings of the RLD, reviewed all available information, and determined that AD action is necessary for products of this type design that are certificated for operation in the United States.

Explanation of Requirements of Proposed Rule

Since an unsafe condition has been identified that is likely to exist or develop on other airplanes of the same type design registered in the United States, the proposed AD would require accomplishment of actions specified in the service bulletin described previously.

Cost Impact

The FAA estimates that 34 airplanes of U.S. registry would be affected by this proposed AD, that it would take approximately 26 work hours per airplane to accomplish the proposed replacement, at an average labor rate of $60 per work hour. Required parts would be furnished by the manufacturer at no cost to the operators. Based on these figures, the cost impact of the replacement proposed by this AD on U.S. operators is estimated to be $53,040, or $1,560 per airplane.

The cost impact figure discussed above is based on assumptions that no operator has yet accomplished any of the proposed requirements of this AD action, and that no operator would accomplish those actions in the future if this AD were not adopted.

Regulatory Impact

The regulations proposed herein would not have substantial direct effects on the States, on the relationship between the national government and the States, or on the distribution of power and responsibilities among the various levels of government. Therefore, in accordance with Executive Order 12612, it is determined that this proposal would not have sufficient federalism implications to warrant the preparation of a Federalism Assessment.

For the reasons discussed above, I certify that this proposed regulation (1) is not a 'significant regulatory action' under Executive Order 12866; (2) is not a 'significant rule' under the DOT Regulatory Policies and Procedures (44 FR 11034, February 26, 1979); and (3) if promulgated, will not have a significant economic impact, positive or negative, on a substantial number of small entities under the criteria of the Regulatory Flexibility Act. A copy of the draft regulatory evaluation prepared for this action is contained in the Rules Docket. A copy of it may be obtained by contacting the Rules Docket at the location provided under the caption **ADDRESSES.**

List of Subjects in 14 CFR Part 39

Air transportation, Aircraft, Aviation safety, Safety.

The Proposed Amendment

Accordingly, pursuant to the authority delegated to me by the Administrator, the Federal Aviation Administration proposes to amend part 39 of the Federal Aviation Regulations (14 CFR part 39) as follows:

PART 39—AIRWORTHINESS DIRECTIVES

1. The authority citation for part 39 continues to read as follows:

Authority: 49 U.S.C. 106(g), 40113, 44701.

§ 39.13 [Amended]

2. Section 39.13 is amended by adding the following new airworthiness directive:

Fokker Services B.V.: Docket 98–NM–98–AD.

Applicability: Model F27 Mark 100, 200, 300, 400, 500, 600, and 700 series airplanes; equipped with Dunlop main landing gear (MLG) actuating rams having part number (P/N) AC67132, AC67134, AC67848, or AC67850; certificated in any category.

Note 1: This AD applies to each airplane identified in the preceding applicability provision, regardless of whether it has been modified, altered, or repaired in the area subject to the requirements of this AD. For airplanes that have been modified, altered, or repaired so that the performance of the requirements of this AD is affected, the owner/operator must request approval for an alternative method of compliance in accordance with paragraph (c) of this AD. The request should include an assessment of the effect of the modification, alteration, or repair on the unsafe condition addressed by this AD; and, if the unsafe condition has not been eliminated, the request should include specific proposed actions to address it.

Compliance: Required as indicated, unless accomplished previously.

To prevent loss of dampening of the MLG actuating ram, which could result in failure of the MLG lockstruts, and consequent structural damage to the airplane, accomplish the following:

(a) Within 4,000 flight hours or 2 years after the effective date of this AD, whichever occurs first, replace the actuating ram bobbin, O-ring seals, and back-up O-ring seals of the MLG, with new bobbins and improved O-ring seals, in accordance with Fokker Service Bulletin F27/32–168, dated October 23, 1996.

Note 2: Dunlop Equipment Division Service Bulletin SB 32–1142, dated October 22, 1996, and Revision 1, dated January 14, 1997, provide service information for accomplishment of the modification.

(b) As of the effective date of this AD, no person shall install on any airplane a Dunlop Main Undercarriage Ram, part number (P/N) AC67132, AC67134, AC67848, or AC67850, unless it has been modified in accordance with Fokker Service Bulletin F27/32–168, dated October 23, 1996.

(c) An alternative method of compliance or adjustment of the compliance time that provides an acceptable level of safety may be used if approved by the Manager, International Branch, ANM–116, FAA, Transport Airplane Directorate. Operators shall submit their request through an appropriate FAA Principal Maintenance Inspector, who may add comments and then send it to the Manager, International Branch, ANM–116.

Note 3: Information concerning the existence of approved alternative methods of compliance with this AD, if any, may be obtained from the International Branch, ANM–116.

(d) Special flight permits may be issued in accordance with sections 21.197 and 21.199 of the Federal Aviation Regulations (14 CFR 21.197 and 21.199) to operate the airplane to a location where the requirements of this AD can be accomplished.

Note 4: The subject of this AD is addressed in Dutch airworthiness directive 1996–142(A), dated November 29, 1996.

Issued in Renton, Washington, on April 8, 1998.

Darrell M. Pederson,

Acting Manager, Transport Airplane Directorate, Aircraft Certification Service.

[FR Doc. 98–9875 Filed 4–14–98; 8:45 am]

BILLING CODE 4910–13–U

DEPARTMENT OF COMMERCE

Bureau of the Census

15 CFR Part 30

[Docket No. 980331081–8081–01]

RIN 0607–AA22

Foreign Trade Statistics Regulations; Reporting the Value of Foreign Military Sales Shipments

AGENCY: Bureau of the Census, Commerce.

ACTION: Notice of proposed rulemaking and request for comments.

SUMMARY: The Bureau of the Census (Census Bureau) proposes amending the Foreign Trade Statistics Regulations (FTSR) by adding a section requiring exporters or their designated agents to include a foreign military sales indicator code on the Shipper's Export Declaration (SED) Form, Automated Export System (AES) Record Layout, and Automated Export Reporting Program (AERP) Record Layout. This would apply whenever a commercial exporter is shipping goods or reporting the repair of military equipment under provisions of the Foreign Military Sales (FMS) program. The Census Bureau is taking this action to assist the Bureau of Economic Analysis (BEA), Department of Commerce, in improving the accuracy and reliability of data collected on the value of exports made under the FMS program. Exports under the FMS program are a component of the U.S. balance of payments accounts and of the U.S. Gross Domestic Product (GDP). The Census Bureau also is taking this action to assist both the Census Bureau and BEA in improving the accuracy and reliability of estimates presented in the Department of Commerce's monthly release ''U.S. International Trade in Goods and Services.'' The BEA has reviewed and approved this proposed rulemaking. The Department of Treasury concurs with the provisions contained in this rule.

DATES: Written comments must be submitted on or before May 15, 1998.

ADDRESSES: Direct all written comments on this proposed rulemaking to the Acting Director, Bureau of the Census, Room 2049, Federal Building 3, Washington, D.C. 20233.

FOR FURTHER INFORMATION CONTACT: Requests for additional information should be directed to C. Harvey Monk, Jr., Chief, Foreign Trade Division, Bureau of the Census, Room 2104, Federal Building 3, Washington, D.C. 20233–6700, by telephone on (301) 457–2255 or by fax on (301) 457–2645.

SUPPLEMENTARY INFORMATION:

Background

The FMS program is authorized under the provisions of the Arms Export Control Act of 1976 (Public Law 90–629, as amended) and predecessor legislation. Under this program, goods and services are transferred directly to foreign governments and international organizations by the U.S. Department of Defense (DOD). The delivery is recorded by DOD at the time ownership is transferred to the foreign government or international organization. This recording is consistent with balance of payments accounting principles. The transfer may be made abroad, in the United States for shipment abroad, or for use in the United States. In the latter case, although the goods physically remain in the United States (for example, equipment to train foreign personnel), ownership is transferred to a foreign government. Transfers also may be made from stocks at U.S. military installations abroad. The SEDs are not required for FMS transactions by DOD agencies; SEDs are required by commercial exporters, but these SEDs do not separately identify FMS transactions.

Program Requirements

The DOD submits quarterly reports to BEA under provisions of the Office of Management and Budget's (OMB) Statistical Policy Directive No. 19, ''Reports of the Department of Commerce on International Transactions.'' These reports contain details of FMS deliveries by broad product category, by country of destination, and by military agency (Army, Navy, Air Force, and other DOD agencies). The reports include deliveries carried out by both DOD and commercial exporters. The BEA prepares estimates of FMS deliveries based on these reports for the quarterly balance of payments accounts.

The DOD also submits monthly reports to the Census Bureau that

contain detailed statistics on military assistance (Foreign Aid/Grant Aid) shipments made from the United States by the DOD and shipments made under the FMS program by the military agencies. These monthly reports are furnished to the Census Bureau in lieu of the SED in order to facilitate shipments of material under Grant Aid and FMS auspices. However, these reports do not cover FMS deliveries by commercial exporters, which comprise a significant share of FMS deliveries.

In order to reconcile the two sets of data provided by DOD, the Census Bureau is proposing to add an FMS indicator code to the SEDs and the electronic transmissions required from commercial exporters. The addition of this indicator code will assure more accurate identification of FMS transactions in the goods data reported to the Census Bureau and enable BEA to make a more accurate estimate of this class of FMS transactions when it removes them from the goods data to avoid counting these transactions twice when it compiles the balance of payments accounts. An FMS indicator code on the SEDs and electronic transmissions from commercial exporters will permit BEA and the Census Bureau to improve the accuracy and reliability of its balance of payments and GDP estimates, as well as the estimates published in the ''U.S. International Trade in Goods and Services'' release.

The Census Bureau is proposing to amend Section 30.7(p) of the FTSR to add paragraph (5) requiring commercial exporters to identify those exports that represent FMS deliveries with an ''M'' indicator code in Item (16) on Commerce Form 7525–V and in Item (23) on Commerce Form 7525–V–ALT (Intermodal) on the paper SEDs, with an ''FS'' Export Information Code on the Commodity Line Item Description (CL1) record on the AES record layout, and with a ''3'' indicator code in field 2 (Type) of the AERP record layout for participants of the AERP.

Rulemaking Requirements

This rule is exempt from all requirements of Section 553 of the Administrative Procedure Act because it deals with a foreign affairs function (5 U.S.C. (A)(1)). However, this rule is being published as a proposed rule, with an opportunity for public comment because of the importance of the issues raised by this rulemaking.

Regulatory Flexibility Act

Because a notice of proposed rulemaking is not required by 5 U.S.C. 553 or any other law, a Regulatory Flexibility Analysis is not required and has not been prepared (5 U.S.C. 603(a)).

Executive Orders

This rule has been determined to be not significant for purposes of Executive Order 12866. This rule does not contain policies with federalism implications sufficient to warrant preparation of a federalism assessment under Executive Order 12612.

Paperwork Reduction Act

Notwithstanding any other provisions of law, no person is required to respond to, nor shall a person be subject to a penalty for failure to comply with, a collection of information subject to the requirements of the Paperwork Reduction Act (PRA) unless that collection of information displays a currently valid OMB control number.

This rule covers collections of information subject to the provisions of the PRA, which are cleared by the OMB under OMB control number 0607–0152.

This rule will not impact the current reporting-hour burden requirements as approved under OMB control number 0607–0152 under provisions of the Paperwork Reduction Act of 1995, Public Law 104–13.

List of Subjects in 15 CFR Part 30

Economic statistics. Foreign trade. Exports. Reporting and record keeping requirements.

For the reasons set out in the preamble, it is proposed that part 30 be amended as follows:

PART 30—FOREIGN TRADE STATISTICS REGULATIONS

1. The authority citation for 15 CFR Part 30 continues to read as follows:

Authority: 5 U.S.C. 301; 13 U.S.C. 301–307; Reorganization Plan No. 5 of 1950 (3 CFR 1949–1953 Camp., 1004); Department of Commerce Organization Order No. 35–2A. August 4, 1975, 40 CFR 42765.

Subpart A—General Requirements—Exporter

2. Section 30.7 is proposed to be amended by adding paragraph (p)(5) to read as follows:

§ 30.7 Information required on Shipper's Export Declarations.

* * * * *

(p) * * *

(5) *Foreign Military Sales (FMS) indicator.* For any export that represents the delivery of goods or the repair of military equipment under provisions of the FMS program, an ''M'' indicator code should be included in Item (16) on Commerce Form 7525–V and in Item (23) on Commerce Form 7525–V–ALT (Intermodal) of the paper SED, with an ''FS'' Export Information Code on the Commodity Line Item Description (CL1) field of the Automated Export System (AES) record layout, and a ''3'' indicator code in field 2 (Type) of the Automated Export Reporting Program (AERP) record layout. This indicator code should be used in lieu of the domestic (D) or foreign (F) indicator code required in those fields on the SED Form, the AES record, and the AERP record. The FMS indicator code will serve to identify more accurately that segment of U.S. exports that represent FMS deliveries in the U.S. export statistics.

* * * * *

Dated: March 25, 1998.

James F. Holmes,

Acting Director, Bureau of the Census.

[FR Doc. 98–9964 Filed 4–14–98; 8:45 am]

BILLING CODE 3510–07–P

DEPARTMENT OF LABOR

Pension and Welfare Benefits Administration

29 CFR Part 2510

RIN 1210–AA48

Plans Established or Maintained Pursuant to Collective Bargaining Agreements Under Section 3(40)(A)

AGENCY: Pension and Welfare Benefits Administration, Department of Labor.

ACTION: Notice of intent to form a negotiated rulemaking advisory committee.

SUMMARY: The Department of Labor (Department) intends to form a Negotiated Rulemaking Advisory Committee (Committee) in accordance with the Negotiated Rulemaking Act of 1990 and the Federal Advisory Committee Act. The Committee will negotiate the development of a proposed rule implementing the Employee Retirement Income Security Act of 1974, as amended, 29 U.S.C. 1001–1461 (ERISA). The purpose of the proposed rule is to establish a process and criteria for a finding by the Secretary of Labor that an agreement is a collective bargaining agreement for purposes of section 3(40) of ERISA. The proposed rule will also provide guidance for determining when an employee benefit plan is established or maintained under or pursuant to such an agreement. Employee benefit plans that are established or maintained for the purpose of providing benefits to the employees of more than one employer

are ''multiple employer welfare arrangements'' under section 3(40) of ERISA, and therefore are subject to certain state regulations, unless they meet one of the exceptions set forth in section 3(40)(A). At issue in this regulation is the exception for plans or arrangements that are established or maintained under one or more agreements which the Secretary finds to be collective bargaining agreements. If adopted, the proposed rule would affect employee welfare benefit plans, their sponsors, participants and beneficiaries, as well as service providers to plans. It may also affect plan fiduciaries, unions, employer organizations, the insurance industry, and state insurance regulators.

DATES: Written comments, applications for membership and nominations for membership on the negotiated rulemaking committee must be received at the address provided below on or before May 15, 1998.

The first meeting of the Committee will be held after the Committee has been established under the Federal Advisory Committee Act (FACA). The date, location and time for Committee meetings will be announced in advance in the **Federal Register**.

ADDRESSES: Comments, applications for membership and nominations for membership may be mailed to the following address: Office of the Solicitor, Plan Benefits Security Division, Room N–4611, U.S. Department of Labor, 200 Constitution Avenue, NW, Washington, DC 20210. *Attention:* Negotiated Rulemaking Advisory Committee for ERISA Section 3(40). In the alternative, comments may be hand-delivered between the hours of 9 a.m. to 5 p.m. to the same address.

All submissions will be open to public inspection and copying in the Public Documents Room, Pension and Welfare Benefits Administration, U.S. Department of Labor, Room N–5638, 200 Constitution Avenue, NW, Washington, DC from 8:30 a.m. to 5:30 p.m.

The Committee meetings will be held at U.S. Department of Labor, 200 Constitution Avenue, NW, Washington, DC 20210 at the convenience of the Committee. The date, location and time for Committee meetings will be announced in advance in the **Federal Register**.

FOR FURTHER INFORMATION CONTACT: Patricia Arzuaga, Office of the Solicitor, Plan Benefits Security Division, U.S. Department of Labor, Room N–4611, 200 Constitution Avenue, NW, Washington, DC 20210 (telephone (202) 219–4600). This is not a toll-free number.

SUPPLEMENTARY INFORMATION:

I. Regulatory Negotiation

The Department intends to use the negotiated rulemaking procedure in accordance with the Negotiated Rulemaking Act of 1990, P.L. 101–648 (5 U.S.C. 561–569)(NRA). The Department will form an advisory committee consisting of representatives of the affected interests and the Department for the purpose of reaching consensus on the proposed rule. The NRA establishes a framework for the conduct of a negotiated rulemaking and encourages agencies to use negotiated rulemaking to enhance the informal rulemaking process. Under the NRA, the head of an agency must consider whether:

- There is a need for the rule;
- There are a limited number of identifiable interests that will be significantly affected by the rule;
- There is a reasonable likelihood that a Committee can be convened with a balanced representation of persons who (1) can adequately represent the interests identified; and (2) are willing to negotiate in good faith to reach a consensus on the rulemaking;
- There is a reasonable likelihood that a Committee will reach a consensus on the rulemaking within a fixed period of time;
- The negotiated rulemaking process will not unreasonably delay the development and issuance of a final rule;
- The agency has adequate resources and is willing to commit such resources, including technical assistance, to the Committee; and
- The agency, to the maximum extent possible consistent with its legal obligations, will use the consensus of the Committee with respect to developing the rule proposed by the agency for public notice and comment.

Negotiations are conducted by a Committee chartered under the Federal Advisory Committee Act (FACA) (5 U.S.C. App. 2). The Committee includes a Department representative and is assisted by a neutral facilitator. The goal of the Committee is to reach consensus on the language or issues involved in the rule. If consensus is reached, the Department undertakes to use the consensus as the basis of the proposed rule, to the extent consistent with its legal obligations. The negotiated rulemaking process does not otherwise affect the Department's obligations under FACA, the Administrative Procedures Act and other statutes, including all economic, paperwork and other required regulatory analyses.

The Department invites comments on the appropriateness of regulatory negotiation for this proposed rule.

II. Subject and Scope of the Rule

A. Need for the Rule

The Department believes that regulatory guidance on the scope of the ERISA 3(40) exception for plans or other arrangements established or maintained pursuant to collective bargaining agreements is necessary to ensure that (1) the Department and state insurance regulators can identify and regulate MEWAs operating in their jurisdiction, and (2) sponsors of employee health benefit programs may determine whether their plans are established or maintained pursuant to collective bargaining agreements for purposes of section 3(40)(A).

Section 3(40)(A) of ERISA defines the term multiple employer welfare arrangement (MEWA) in pertinent part as follows:

> The term ''multiple employer welfare arrangement'' means an employee welfare benefit plan, or any other arrangement (other than an employee welfare benefit plan), which is established or maintained for the purpose of offering or providing any benefit described in paragraph (1) [of section 3 of the Act] to the employees of two or more employers (including one or more self-employed individuals), or to their beneficiaries, except that such term does not include any such plan or other arrangement which is established or maintained—
>
> (i) Under or pursuant to one or more agreements which the Secretary finds to be collective bargaining agreements * * *.

This provision was added to ERISA by the Multiple Employer Welfare Arrangement Act of 1983, Sec. 302(b), Pub. L. 97–473, 96 Stat. 2611, 2612 (29 U.S.C. 1002(40)), which also amended section 514(b) of ERISA. Section 514(a) of the Act provides that state laws which relate to employee benefit plans are generally preempted by ERISA. Section 514(b) sets forth exceptions to the general rule of section 514(a) and subjects employee benefit plans that are MEWAs to various levels of state regulation depending on whether or not the MEWA is fully insured. Sec. 302(b), Pub. L. 97–473, 96 Stat. 2611, 2613 (29 U.S.C. 1144(b)(6)).[1]

[1] The Multiple Employer Welfare Arrangement Act of 1983 added section 514(b)(6), which provides a limited exception to ERISA's preemption of state insurance laws. This exception allows states to exercise regulatory authority over employee welfare benefit plans that are MEWAs. Section 514(b) provides, in relevant part, that:

(6)(A) Notwithstanding any other provision of this section—

(i) in the case of an employee welfare benefit plan which is a multiple employer welfare arrangement and is fully insured (or which is a multiple

The Multiple Employer Welfare Arrangement Act was enacted to counter abuse by the operators of bogus ''insurance trusts.'' Congress was concerned that certain MEWA operators were successfully thwarting timely investigations and enforcement activities of state agencies by asserting that such entities were ERISA plans exempt from state regulation by the terms of section 514 of ERISA. The goal of the law was to remove legal obstacles which could hinder the ability of the States to regulate multiple employer welfare arrangements to assure the financial soundness and timely payment of benefits under these arrangements. 128 Cong. Rec. E2407 (1982)(Statement of Congressman Erlenborn).

As a result of the addition of section 514(b)(6) to ERISA, certain state laws regulating insurance apply to employee benefit plans that are MEWAs. However, the definition of a MEWA in section 3(40) provides that an employee benefit plan is not a MEWA if it is established or maintained pursuant to an agreement which the Secretary of Labor finds to be a collective bargaining agreement. Such a plan is therefore not subject to regulation under state insurance law under section 514(b)(6).

While the Multiple Employer Welfare Arrangement Act of 1983 significantly enhanced the states' ability to regulate MEWAs, problems in this area continue to exist as a result of the exception for collectively bargained plans contained in the 1983 amendments. This exception is now being exploited by some MEWA operators who, through the use of sham unions and collective bargaining agreements, market fraudulent insurance schemes under the guise of collectively bargained welfare plans exempt from state insurance regulation. Another issue in this area involves the use of collectively bargained arrangements as vehicles for marketing health care coverage nationwide to employees and employers with no relationship to the bargaining process or the underlying agreement. In addition, the Department has received requests to make individual determinations concerning the status of particular plans under section 3(40) of ERISA.

The purpose of the negotiated rulemaking is to develop a proposed rule that would facilitate determinations by the Department, employee benefit plans and state insurance regulatory agencies as to whether a particular agreement is a collective bargaining agreement, and whether a particular plan is established or maintained under or pursuant to one or more collective bargaining agreements.

Earlier Proposed Rule: In 1995, the Department published a Notice of Proposed Rulemaking on Plans Established or Maintained Pursuant to Collective Bargaining Agreements in the **Federal Register**. 60 FR 39209 (August 1, 1995) (NPRM). The Department proposed criteria and a process for determining whether an employee benefit plan is established or maintained under or pursuant to one or more agreements that the Secretary finds to be collective bargaining agreements for purposes of section 3(40) of ERISA. The proposed approach would not have required individual findings by the Department. The Department received numerous comments on the NPRM. Commenters expressed concerns about their ability to comply with the standards set forth in the NPRM, or to obtain data necessary to establish compliance with the criteria proposed by the Department. Commenters also objected to having states determine whether a particular agreement was a collective bargaining agreement.

B. Issues and Questions to be Resolved

The major issues the Department intends to address in this proposed rule are the criteria and the process for determining whether an employee benefit plan is established or maintained under or pursuant to one or more agreements that the Secretary finds to be collective bargaining agreements for purposes of section 3(40)(A) of ERISA.

A number of interests (including employers, service providers, and participants) are likely to be affected by the new rule on the definition of collective bargaining agreements under ERISA 3(40). The effect of the rule is likely to vary, depending primarily on the size of the multiemployer plans and the size and financial condition of the employers contributing to these plans, and the extent to which plan coverage encompasses non-bargaining unit employees.

III. Affected Interests and Potential Committee Membership

The following organizations have expressed an interest in participating in this negotiated rulemaking. The Department believes that these organizations, directly or through joint representation with other organizations, reflect an appropriate mix of the interests significantly affected by the proposed rulemaking. Committee membership may change from the organizations listed below based on applications for membership or nominations for membership that may be received in response to this Notice.

Labor (employees covered by or seeking to be covered by CBAs)

AFL–CIO

Multiemployer Plans

National Coordinating Committee for Multiemployer Plans
Entertainment Industry Multiemployer Health Plans

States

National Association of Insurance Commissioners

Federal Government

Department of Labor:
Pension Welfare Benefits Administration: Elizabeth Goodman, DOL Negotiator, Office of Regulations and Interpretations

The Department nominates Peter Swanson of the Federal Mediation and Conciliation Service as facilitator. Mr. Swanson has extensive experience in facilitating negotiating rulemaking meetings and in mediating disputes.

The intent in establishing the Committee is that all significantly affected interests are represented, not necessarily all parties. While the Department believes the above participants represent the principal interests associated with the rule to be negotiated, we invite comment on this list of negotiation participants.

IV. Formation of the Negotiating Committee

A. Procedure for Establishing an Advisory Committee

As a general rule, an agency of the Federal Government is required to comply with the requirements of FACA when it establishes or uses a group that includes nonfederal members as a source of advice. Under FACA, an advisory committee is established once a charter has been approved by the

---

employer welfare arrangement subject to an exemption under subparagraph (B)), any law of any State which regulates insurance may apply to such arrangement to the extent that such law provides—

(I) standards, requiring the maintenance of specified levels of reserves and specified levels of contributions, which any such plan, or any trust established under such a plan, must meet in order to be considered under such law able to pay benefits in full when due, and

(II) provisions to enforce such standards, and

(ii) in the case of any other employee welfare benefit plan which is a multiple employer welfare arrangement, in addition to this title, any law of any State which regulates insurance may apply to the extent not inconsistent with the preceding sections of this title.

Thus, an employee welfare benefit plan that is a MEWA remains subject to state regulation to the extent provided in section 514(b)(6)(A). MEWAs which are not employee benefit plans are unconditionally subject to state law.

Secretary of Labor. Negotiations will not begin until the charter has been approved.

B. Participants

Under the NRA, the number of participants on the Committee should not exceed 25. A number larger than this could make it difficult to conduct effective negotiations. One purpose of this notice is to help determine whether the proposed rule would significantly affect interests not adequately represented by the proposed participants. The NRA does not require that each potentially affected organization or individual must necessarily have its own representative. However, each interest must be adequately represented. Moreover, the Department must be satisfied that the group as a whole reflects a proper balance and mix of interests.

C. Requests for Representation

Persons who will be affected significantly by the planned proposed rule on the definition of a collective bargaining agreement and who believe that their interests will not be adequately represented by the persons identified above may apply, or nominate another person, for membership on the Committee to represent their interests. Each application or nomination must include: (1) The name of the applicant or nominee and a description of the interests the person will represent; (2) evidence that the applicant or nominee is authorized to represent parties related to the interests the person proposes to represent; (3) a written commitment that the applicant or nominee will actively participate in good faith in the development of the proposed rule; and (4) the reasons the persons identified above do not adequately represent the interests of the person submitting the application or nomination.

The Department will decide whether the applicant or nominee should be permitted to represent an interest or member of the Committee. The decision is based on whether the individual or interest (1) would be significantly affected by the rule; and (2) is already adequately represented on the Committee.

D. Notice of Establishment of Committee

After reviewing any comments on this Notice of Intent and any requests for representation, the Department will issue a notice announcing the establishment of a negotiated rulemaking advisory committee, unless the Department decides, based on comments and other relevant considerations, that establishment of the Committee is inappropriate. All meeting notices will be published in the **Federal Register**.

V. Negotiation Procedures

When the Committee is formed, the following procedures and guidelines will apply, unless they are modified as a result of comments received on this notice or during the negotiation process—

A. Facilitator

The Committee will use a neutral facilitator. The facilitator will not be involved with the substantive development of the regulation. The facilitator's role is to chair the negotiating sessions; help the negotiation process run smoothly; maintain the meeting minutes as required under FACA; and help the Committee define and reach consensus.

B. Good Faith Negotiations

Participants must be willing to negotiate in good faith and be authorized to do so.

C. Committee Expenses and Administrative Support

In most cases, Committee members are responsible for their own expenses of participation. The Department may pay for certain expenses, in accordance with Section 7(d) of the Federal Advisory Committee Act, if (1) a member certifies a lack of adequate financial resources to participate in the Committee; and (2) the Department determines that such member's participation in the Committee is necessary to assure adequate representation of the member's interest.

The Department will provide logistical, administrative, and management support to the Committee. If deemed necessary, the Department will provide technical support to the Committee in gathering and analyzing data or information.

D. Schedule for Negotiation/Meetings

The Department has set a deadline of approximately five to six months beginning with the date of the first meeting for the Committee to complete work on development of the proposed rule. We intend to terminate the activities of the Committee if it does not appear likely to reach consensus within this time period.

Once the Committee has been established under the FACA, the Department will publish a notice of the first Committee meeting in the **Federal Register**. The purpose of the first meeting will be to discuss in detail how the negotiations will proceed and how the Committee will function. The Committee will:

- Agree to ground rules for Committee operation;
- Determine how best to address the principal issues; and
- If time permits, begin to address those issues.

The date, location, time and agenda for all Committee meetings will be announced in advance in the **Federal Register**. These subsequent Committee meetings will be held approximately every three weeks. Unless announced otherwise, meetings are open to the public.

E. Committee Procedures

Under the general guidelines and direction of the facilitator, and subject to any applicable legal requirements, members of the Committee will establish the detailed procedures for Committee meetings that they consider most appropriate.

F. Defining Consensus

The goal of the negotiating process is consensus. Under the NRA, consensus means that each interest represented on the Committee concurs in the result, unless the Committee (1) agrees to define ''consensus'' to mean general but not unanimous concurrence, or (2) agrees upon another specified definition. The Department expects the Committee participants to fashion their working definition of this term.

G. Failure of the Advisory Committee to Reach Consensus

If the Committee is unable to reach consensus, the Department will proceed independently to develop a proposed rule. Parties to the negotiation may withdraw at any time. If this occurs, the Department and the remaining participants on the Committee will evaluate whether the Committee should continue.

H. Record of Meetings

In accordance with FACA's requirements, minutes of all Committee meetings will be kept. The minutes will be placed in the public rulemaking record.

I. Other Information

In accordance with the provisions of Executive Order 12866, this notice was reviewed by the Office of Management and Budget.

VI. Authority

This document was prepared under the direction of Olena Berg, Assistant Secretary of Labor for Pension and Welfare Benefits, U.S. Department of

Labor, 200 Constitution Avenue, NW, Washington, DC 20210, pursuant to Section 3 of the Negotiated Rulemaking Act of 1990, 104 Stat. 4969, Title 5 U.S.C. 561 *et seq.*; and section 3(40) of ERISA (Pub. L. 97–473, 96 Stat. 2611, 2612, 29 U.S.C. 1002(40)) and section 505 (Pub. L. 93–406, 88 Stat. 892, 894, 29 U.S.C. 1135) of ERISA, and under Secretary of Labor's Order No. 1–87, 52 FR 13139, April 21, 1987.

Signed at Washington, DC, this 9th day of April 1998.

Olena Berg,

Assistant Secretary, Pension and Welfare Benefits Administration.

[FR Doc. 98–9952 Filed 4–14–98; 8:45 am]

BILLING CODE 4510–29–P

DEPARTMENT OF TRANSPORTATION

Coast Guard

33 CFR Part 66

[USCG–1998–3604]

RIN 2115–AF50

Amendment of State Waters for Private Aids to Navigation in Wisconsin and Alabama

AGENCY: Coast Guard, DOT.

ACTION: Notice of proposed rulemaking.

SUMMARY: The U.S. Coast Guard proposes to reestablish Federal jurisdiction over certain waterways in the State of Alabama and expand state jurisdiction of certain waterways in the State of Wisconsin for the purposes of Private Aids to Navigation. This action is being taken to implement a request from the State of Alabama and an agreement between the State of Wisconsin and the Coast Guard, and to ensure, safe navigation on the affected waterways.

DATES: Comments must reach the Coast Guard on or before June 15, 1998.

ADDRESSES: You may mail comments to the Docket Management Facility, USCG–1998–3604, U.S. Department of Transportation, room PL–401, 400 Seventh Street SW., Washington, DC 20590–0001, or deliver them to room PL–401, located on the Plaza Level of the Nassif Building at the same address between 10 a.m. and 5 p.m., Monday through Friday, except Federal holidays. The telephone number is 202–366–9329.

The Docket Management Facility maintains the public docket for this rulemaking. Comments will become part of this docket and will be available for inspection or copying at room PL–401, located on the Plaza Level of the Nassif Building at the same address between 10 a.m. and 5 p.m., Monday through Friday, except Federal holidays. You may also access this docket on the Internet at http://dms.dot.gov.

FOR FURTHER INFORMATION CONTACT: Ms. Paulette Twine, Chief, Documentary Services Division, Department of Transportation, telephone (202) 366–9329, for questions on the docket, or for questions on this notice contact, Mr. Dan Andrusiak, G–OPN–2 at (202) 267–0327.

SUPPLEMENTARY INFORMATION:

Request for Comments

The Coast Guard encourages you to submit written data, views, or arguments. If you submit comments, you should include your name and address, identify this notice USCG–1998–3604 and the specific section or question in this document to which your comments apply, and give the reason for each comment. Please submit one copy of all comments and attachments in an unbound format, no larger than 8½ by 11 inches, suitable for copying and electronic filing to the DOT Docket Management Facility at the address under **ADDRESSES**. If you want us to acknowledge receiving your comments, please enclose a stamped, self-addressed postcard or envelope.

The Coast Guard will consider all comments received during the comment period.

The Coast Guard may schedule a public meeting depending on input received in response to this notice. You may request a public meeting by submitting a request to the address under **ADDRESSES**. The request should include the reasons why a meeting would be beneficial. If the Coast Guard determines that a public meeting should be held, it will hold the meeting at a time and place announced by a later notice in the **Federal Register**.

Background and Purpose

On March 26, 1971, the Coast Guard and the State of Alabama signed an agreement giving the State of Alabama control over certain of its waterways for the purposes of private aids to navigation. On April 1, 1981, Mr. William Garner, Director, Marine Police Division for the State of Alabama, sent a letter to the Chief of the Eighth Coast Guard District Aids to Navigation branch asking that the original agreement of March 26, 1971, be discontinued. Mr. Garner stated that no follow-up had been done on the agreement and therefore that the agreement had never been implemented. The Coast Guard proposes this change to comply with the State of Alabama's request and to ensure that discrepancies in aids to navigation can be quickly corrected. This rule also proposes to implement an agreement between the Coast Guard and the State of Wisconsin changing the reference date for designation of State waters for private aids to navigation from November 17, 1969, to May 1, 1996.

This rule change proposes two things for the purpose of Private Aids to Navigation. First, by removing Paragraph § 66.05–100(a) it will reestablish Federal jurisdiction over certain waterways in the State of Alabama. Second, by amending paragraph § 66.05–100(j) the State of Wisconsin will expand state jurisdiction over Lake Winnebago, the Fox River, and various other waterways in their regulatory system.

Regulatory Evaluation

This proposal is not a significant regulatory action under section 3(f) of Executive Order 12866 and does not require an assessment of potential costs and benefits under section 6(a)(3) of that order. It has not been reviewed by the Office of Management and Budget under that order. It is not significant under the regulatory policies and procedures of the Department of Transportation (DOT) (44 FR 11040; February 26, 1979). The Coast Guard expects the economic impact of this proposed rule to be so minimal that a full Regulatory Evaluation under paragraph 10e of the regulatory policies and procedures of DOT is unnecessary.

Small Entities

Under the Regulatory Flexibility Act (5 U.S.C. 601–612), the Coast Guard considers whether this rule will have a significant economic impact on a substantial number of small entities. ''Small entities'' may include (1) small businesses and not-for-profit organizations that are independently owned and operated and are not dominant in their fields and (2) governmental jurisdictions with populations of less than 50,000. Because it expects the impact of this proposal to be minimal, the Coast Guard certifies under 5 U.S.C. 606(b) that the proposal, if adopted, will not have a significant economic impact on a substantial number of small entities. This conclusion was reached by conferring with Aids to Navigation personnel at the affected districts and having received assurance that this rule change would not cause any significant economic impact on small business. In accordance with section 213(a) of the Small

Business Regulatory Enforcement Fairness Act of 1996 (Pub. L. 104–121), the Coast Guard wants to assist small entities in understanding this proposed rule so that they can better evaluate its effect on them and participate in the rulemaking process. If your small business or organization is affected by this rule and you have questions concerning its provisions or options for compliance, please contact LCDR John Fidaleo, G–OPN–2 at (202) 267–0346.

Collection of Information

This rule contains no collection-of-information requirements under the Paperwork Reduction Act (44 U.S.C. 3501–3520).

Federalism

The Coast Guard has analyzed this proposal under the principles and criteria contained in Executive Order 12612 and has determined this proposal does not have sufficient federalism implications to warrant preparation of a Federalism Assessment.

Environment

The Coast Guard considered the environmental impact of this proposed rule and concluded that under paragraph 2.B.2.e(23) and (34)(i) of Commandant Instruction M16475.1B, this proposed rule is categorically excluded from further environmental documentation. A ''Categorical Exclusion Determination'' is available in the docket for inspection or copying where indicated under **ADDRESSES**.

List of Subjects in 33 CFR Part 66

Intergovernmental relations, Navigation (water), Reporting and recordkeeping requirements.

For the reasons set forth in the preamble, the Coast Guard proposes to amend 33 CFR part 66 as follows:

PART 66—[AMENDED]

1. The authority citation for part 66 continues to read as follows:

Authority: 14 U.S.C. 83, 85; 43 U.S.C. 1333; 49 CFR 1.46.

2. In § 66.05–100, remove paragraph (a), and redesignate paragraphs (b) through (j) as paragraphs (a) through (i), and revise newly designated paragraph (i) to read as follows:

§ 66.05–100 Designation of navigable waters as State waters for private aids to navigation.

* * * * *

(i) *Wisconsin.* Navigable waters within the State not marked with Coast Guard aids to navigation as of May 1, 1996.

Dated: March 27, 1998.

Ernest R. Riutta,

Assistant Commandant for Operations.

[FR Doc. 98–9922 Filed 4–14–98; 8:45 am]

BILLING CODE 4910–15–M

DEPARTMENT OF TRANSPORTATION

Coast Guard

33 CFR Part 117

[CGD08–94–028]

RIN 2115–AE47

Drawbridge Operating Regulation; Kelso Bayou, LA

AGENCY: Coast Guard, DOT.

ACTION: Supplemental notice of proposed rulemaking.

SUMMARY: The Coast Guard is proposing a change to the regulation governing the operation of the State Route 27 swing span drawbridge across Kelso Bayou, mile 0.7, at Hackberry, Cameron Parish, Louisiana. The change will require four hours advance notification at night from May 20 through December 22. The change will increase the advance notification from four hours to 24 hours from December 23 through May 19. This action would provide relief to the bridge owner and still provide for the reasonable needs of navigation.

DATES: Comments must be received on or before June 15, 1998.

ADDRESSES: Unless otherwise indicated, documents referred to in this notice are available for inspection or copying at the office of the Eighth Coast Guard District, Bridge Administration Branch, Hale Boggs Federal Building, room 1313, 501 Magazine Street, New Orleans, Louisiana 70130–3396 between 7 a.m. and 4 p.m., Monday through Friday, except Federal holidays. The telephone number is (504) 589–2965. Commander (ob) maintains the public docket for this rulemaking.

FOR FURTHER INFORMATION CONTACT: Mr. David Frank, Bridge Administration Branch, telephone number 504–589–2965.

SUPPLEMENTARY INFORMATION:

Request for Comments

The Coast Guard encourages interested persons to participate in this proposed rulemaking by submitting written data, views, or arguments. Persons submitting comments should include their names and addresses, identify this rulemaking (CGD08 94–028) and the specific section of this document to which each comment applies, and give the reason for each comment. Please submit all comments and attachments in an unbound format, no larger than 8½ by 11 inches, suitable for copying and electronic filing. Persons wanting acknowledgment of receipt of comments should enclose stamped, self-addressed postcards or envelopes.

The Coast Guard will consider all comments received during the comment period. It may change this proposed rule in view of the comments.

The Coast Guard plans no public hearing. Persons may request a public hearing by writing to the Eighth Coast Guard District at the address under **ADDRESSES**. The request should include the reasons why a hearing would be beneficial. If it determines that the opportunity for oral presentations will aid this rulemaking, the Coast Guard will hold a public hearing at a time and place announced by a later notice in the **Federal Register**.

Regulatory History

On October 4, 1994, the Coast Guard published a notice of proposed rulemaking (NPRM) in the **Federal Register** (59 FR 50528). The NPRM proposed a change to the advance notification prior to opening the bridge. The proposed requirement was as follows:

a. From about May 25 (the beginning of shrimp season as set by the state yearly), until October 31, the bridge would open on signal from 7 a.m. to 7 p.m. and open on four hours notice from 7 p.m. to 7 a.m.

b. From November 1 through December 22, the draw would open on signal from 7 a.m. to 3 p.m. and from 3 p.m. to 7 a.m. open on four hours notice.

c. From December 22, until about May 25, the draw would open on 24 hours notice.

Presently the bridge opens on signal from May 25, until December 22. Alternate routes are available.

The Coast Guard received four letters in response to the NPRM. One of the letters was from a business owner whose business was dependent upon access by waterway users to deliver their product to his facility. He stated that the change would force a closure of his business. The applicant and the bridge owner began discussions to attempt to resolve their differences, but were unable to reach any agreement. Since that time, the business owner has sold his business. Subsequently, the business has closed completely. The Louisiana Department of Transportation and Development (LDOTD) has resubmitted a proposal requesting a new operating schedule.

Background and Purpose

LDOTD has requested the new regulation because of a decline in vessel traffic that passes the Kelso Bayou bridge at Hackberry during certain times of the year. The proposed rule would allow the bridge owner relief from having a person available at the bridge site during the periods when vessel traffic is less frequent. This proposed rule would create a savings to the taxpayer while still serving the reasonable needs of navigational interests.

Discussion of Supplemental Proposed Rule

The Kelso Bayou bridge is a 406-foot long structure. Navigational clearances provided by the bridge are 9.1 feet vertical above mean high water in the closed position and unlimited in the open position. Horizontal clearance is 50 feet. Navigation on the waterway consists mainly of small and large fishing boats and occasional small oil field work boats.

The proposed regulation would require that from May 20, until October 31, the draw would open on signal from 7 a.m. until 7 p.m. From 7 p.m. until 7 a.m., the draw would open on signal if at least four hours notice is given. From November 1, through December 22, the draw would open on signal from 7 a.m. to 3 p.m. From 3 p.m. to 7 a.m., the draw would open on signal if at least four hours notice is given. From December 23, until May 19, the draw would open on signal if at least 24 hours notice is given. Alternate routes are available.

Data provided by LDOTD show that from January 1, through December 31, 1997, the number of vessels that passed the bridge totaled 803. Between January 1, and May 20, the bridge opened a total of 13 times for the passage of vessels. Due to the limited number of openings, LDOTD has requested an increase in notification from four hours to 24 hours between December 23 and May 19. Between May 20, and October 31, the bridge opened 682 times for the passage of vessels. Between November 1, and December 31, the bridge opened 108 times for the passage of vessels. Of the 803 openings, 579 occurred between the hours of 7 a.m. and 7 p.m. and 224 occurred between the hours of 7 p.m. and 7 a.m. Due to the limited openings at night, LDOTD has requested that the 4-hour notification, used at other times during the year, be extended to include night time hours during shrimp season. These changes would provide a savings to the taxpayer and still serve the reasonable needs of navigation. Alternate routes are available at all times. They are the Calcasieu Ship Channel, the Intercostal Canal and the Salt Ditch.

Regulatory Evaluation

This proposed rule is not a significant regulatory action under section 3(f) of Executive Order 12866 and does not require an assessment of potential costs and benefits under section 6(a)(3) of that Order. It has not been reviewed by the Office of Management and Budget under that Order. It is not significant under the regulatory policies and procedures of the Department of Transportation (DOT) (44 FR 11040; February 26, 1979).

The Coast Guard expects the economic impact of this proposed rule to be so minimal that a full Regulatory Evaluation under paragraph 10e of the regulatory policies and procedures of DOT is unnecessary.

Small Entities

Under the Regulatory Flexibility Act (5 U.S.C. 601 *et seq.*), the Coast Guard considers whether this proposed rule, if adopted, will have a significant economic impact on a substantial number of small entities. ''Small entities'' include (1) small businesses, not-for-profit organizations that are independently owned and operated and are not dominant in their fields, and (2) governmental jurisdictions with populations of less than 50,000.

The proposed rule also considers the needs of local commercial fishing vessels and the economic impact is expected to be minimal. Therefore, the Coast Guard certifies under 5 U.S.C. 605(b) that this proposed rule, if adopted, will not have a significant economic impact on a substantial number of small entities. If, however, you think that your business or organization qualifies as a small entity and that this proposed rule will have a significant economic impact on your business or organization, please submit a comment (see **ADDRESSES**) explaining why you think you qualify and in what way and to what degree this proposed rule will economically affect you.

Collection of Information

The proposed rule does not provide for a collection of information under the Paperwork Reduction Act of 1995 (44 U.S.C. 3501 *et seq.*).

Federalism Assessment

The Coast Guard has analyzed this proposed rule under the principles and criteria contained in Executive Order 12612 and has determined that this rulemaking does not have sufficient federalism implications to warrant the preparation of a Federalism Assessment.

Environmental Assessment

The Coast Guard considered the environmental impact of this proposed rule and concluded that under Figure 2–1, CE #32(e) of the NEPA Implementing Procedures, COMDINST M16475.IC, this proposed rule is categorically excluded from further environmental documentation.

List of Subjects in 33 CFR Part 117

Bridges.

Proposed Regulations

For the reasons set out in the preamble, the Coast Guard proposes to amend part 117 of Title 33, Code of Federal Regulations, as follows:

PART 117—DRAWBRIDGE OPERATION REGULATIONS

1. The authority citation for part 117 continues to read as follows:

Authority: 33 U.S.C. 499; 49 CFR 1.46; 33 CFR 1.05–1(g); section 117.255 also issued under the authority of Pub. L. 102–587, 105 Stat. 5039.

2. Section 117.459 is revised to read as follows:

§ 117.459 Kelso Bayou.

The draw of the S27 bridge mile 0.7 at Hackberry, shall operate as follows:

(a) From May 20, until October 31, the draw shall open on signal from 7 a.m. to 7 p.m. From 7 p.m. to 7 a.m., the draw shall open on signal if at least four hours notice is given.

(b) From November 1 through December 22, the draw shall open on signal from 7 a.m. to 3 p.m. From 3 p.m. to 7 a.m., the draw shall open on signal if at least four hours notice is given.

(c) From December 23 until May 19, the draw shall open on signal if at least 24 hours notice is given.

Dated: March 18, 1998.

A.L. Gerfin, Jr.,

Captain, U.S. Coast Guard, Commander, 8th Coast Guard Dist., Acting.

[FR Doc. 98–9928 Filed 4–14–98; 8:45 am]

BILLING CODE 4910–15–M

ENVIRONMENTAL PROTECTION AGENCY

40 CFR Part 8

[FRL–5994–1]

Extension of Effective Date of Environmental Impact Assessment of Nongovernmental Activities in Antarctica

AGENCY: Environmental Protection Agency (EPA).

ACTION: Proposed rule.

SUMMARY: On April 30, 1997, the Environmental Protection Agency (EPA) promulgated a regulation on environmental impact assessment of nongovernmental activities in Antarctica under Public Law 104–227, the Antarctic Science, Tourism, and Conservation Act of 1996. The April 30, 1997, Interim Final Rule applies only to nongovernmental activities that may occur through the 1998–99 austral summer, to be replaced by a final rule. The EPA had planned to promulgate the final rule prior to October 2, 1998. However, representatives from the affected industry and environmental nongovernmental organizations (NGOs) have requested that EPA delay promulgation of the final rule for at least one year so that more experience with the Interim Final Rule can be considered in developing the final rule. After consultation with other Federal agencies which are involved with nongovernmental activities in Antarctica, EPA has determined that this request is reasonable and that additional time to develop the final rule will be beneficial. In order to delay promulgation of the final rule, EPA must amend the Interim Final Rule to extend its applicability through the 2000–2001 austral summer. Accordingly, EPA is proposing this amendment to extend the effective date of the Interim Final Rule.

The EPA is also publishing an identical amendment to the Interim Final Rule as a direct amendment to the interim final rule in the final rules section of today's **Federal Register**. The EPA is promulgating the amendment to extend the effective date of the Interim Final Rule as a direct amendment to the interim final rule without prior proposal, because EPA views this as a noncontroversial action and anticipates no adverse comments. However, if the time extension amendment in the direct final rule receives relevant adverse comment, then EPA will withdraw the direct amendment to the interim final rule prior to its effective date and consider the comments received on it as comments on this proposed rule. For instructions on commenting to EPA on this proposed rule, please see the **ADDRESSES** section.

DATES: Comments must be received by June 15, 1998.

ADDRESSES: Comments must be addressed to Mr. Joseph Montgomery or Ms. Katherine Biggs, Office of Federal Activities (2252A), U.S. Environmental Protection Agency, 401 M Street, SW., Washington, DC 20460.

FOR FURTHER INFORMATION CONTACT: Mr. Joseph Montgomery or Ms. Katherine Biggs, Office of Federal Activities (2252A), U.S. Environmental Protection Agency, 401 M Street, SW., Washington, DC 20460; telephone: (202) 564–7157 or (202) 564–7144, respectively.

SUPPLEMENTARY INFORMATION: For additional information, see the direct amendment to interim final rule published in the final rules section of this **Federal Register**. For information on this proposed rule and the associated direct amendment to interim final rulemaking, see the **SUMMARY** section of this document.

I. Executive Order Clearance

Under Executive Order 12866, (58 FR 51,735 (October 4, 1993)) the EPA must determine whether the regulatory action is ''significant'' and therefore subject to review by the Office of Management and Budget (OMB) and the requirements of the Executive Order. The Order defines ''significant regulatory action'' as one that is likely to result in a rule that may:

(1) Have an annual effect on the economy of $100 million or more or adversely affect in a material way the economy, a sector of the economy, productivity, competition, jobs, the environment, public health or safety, or State, local, or tribal governments or communities;

(2) Create a serious inconsistency or otherwise interfere with an action taken or planned by another agency;

(3) Materially alter the budgetary impact of entitlements, grants, user fees, or loan programs or the rights and obligations of recipients thereof; or

(4) Raise novel legal or policy issues arising out of legal mandates, the President's priorities, or the principles set forth in the Executive Order.

Pursuant to the terms of Executive Order 12866, EPA determined that the Interim Final Rule (62 FR 83, 23544 (April 30, 1997)) was a ''significant regulatory action.'' Although none of the first three criteria apply, the Interim Final Rule raised novel legal or policy issues arising out of legal mandates under P.L. 104–227, the Antarctic Science, Tourism, and Conservation Act of 1996 and the Protocol on Environmental Protection to the Antarctic Treaty of 1959. Accordingly, the Interim Final Rule was submitted to OMB for review. Changes were made in response to OMB recommendations. The EPA has determined, however, that this action to amend the effective date of the Interim Final Rule is not a ''significant regulatory action'' because the legal and policies issues raised are no longer novel and were considered previously by OMB and because the first three criteria still do not apply. Accordingly, this action was not submitted to OMB for review.

II. Regulatory Flexibility Act

The EPA determined that the Interim Final Rule issued April 30, 1997, was not subject to the Regulatory Flexibility Act (RFA), which generally requires an agency to prepare a regulatory flexibility analysis for any proposed and final rule, unless the agency certifies that the rule will not have a significant economic impact on a substantial number of small entities. By its terms, the RFA applies only to rules for which the Agency is required to conduct notice-and-comment rulemaking under the Administrative Procedure Act (APA) or any other statute. The Interim Final Rule was not subject to the RFA because EPA promulgated the rule invoking the ''good cause'' exemption provided in section 553(b) of the APA, 5 U.S.C. 553(b)(B), which removed the rule from the APA notice and comment requirements.

Today's proposed regulation, although it does no more than extend the effective date of the Interim Final Rule, is not exempt from APA notice and comment requirements, and is, therefore, subject to the requirements of the Regulatory Flexibility Act. The Agency has carefully assessed the impact of this proposed regulation on small entities, and has determined that it is appropriate to certify that it will not have a significant economic impact on a substantial number of small entities.

This determination is based on several factors. First, the total number of entities subject to the rule is small, probably no more than 10. However, the overwhelming majority of the affected entities will be small. Nevertheless, the impact of the rule will be low because assessments are already done pursuant to the current rule. Further, because the Interim Final Rule, as proposed today, only requires assessment of environmental impacts, it will not cause any revenue reductions. The only economic effects of the rule on small businesses will be limited primarily to the cost of preparing an assessment. As

explained further below in the discussion of the Paperwork Reduction Act, these costs should have been relatively minor even for the first year's submission, which all operators completed. Further, EPA anticipates few, if any, new operators will enter the field, and that for existing operators submissions in succeeding years will be able to re-use or modify substantial portions of the first year's documentation, further reducing costs.

In addition, EPA has ensured the impact to small entities is minimized by drafting the Interim Final Rule such that the requirements it imposes are no greater than necessary to ensure that the United States will be in compliance with its international obligations under the Protocol and the Treaty. Finally, EPA has included a number of provisions, e.g., incorporation of information and consolidation of documentation, in the Interim Final Rule which should minimize the cost of such an analysis.

III. Unfunded Mandates Reform Act and Executive Order 12875

Title II of the Unfunded Mandates Reform Act of 1995 (UMRA), P.L. 104–4, establishes requirements for Federal agencies to assess the effects of their regulatory actions on state, local, and tribal governments and the private sector. The UMRA did not apply to the Interim Final Rule because it was necessary for the ratification and implementation of international treaty obligations. The Interim Final Rule was not subject to the requirements of sections 202 and 205 of the UMRA. In any event, EPA determined that the Interim Final Rule did not contain a Federal mandate that may result in annual expenditures of $100 million or more for state, local, and tribal governments, in the aggregate, or for the private sector. The EPA also determined that the Interim Final Rule contained no regulatory requirements that might significantly or uniquely affect small governments under section 203 of the UMRA. This proposed action is merely an extension of the effective date of the Interim Final Rule and imposes no burdens that may result in annual expenditures of $100 million or more. The rule, as extended, also is not expected to impact small governments significantly or uniquely. Accordingly, the requirements of UMRA do not apply.

Executive Order 12875, Enhancing Intergovernmental Partnerships, likewise requires EPA to address certain effects on state, local, and tribal governments, but does not apply to the private sector. Since this regulation will affect only the private sector, and not any local, state, or tribal governments, the Executive Order does not apply.

IV. Paperwork Reduction Act

The information collection requirements in the Interim Final Rule were submitted for approval to the OMB under the Paperwork Reduction Act, 44 U.S.C. 3501 *et seq.* Under Section 1320.13 of this Act, EPA received emergency approval, and a six month extension of this approval, from OMB for the Interim Final Rule. The OMB's approval expires in August 1998. Information Collection Request (ICR) Supporting Statements were prepared by EPA for the emergency approval of the ICR for the Interim Final Rule (ICR No. 1808.01) and the extension of this approval, and copies may be obtained from Ms. Sandy Farmer, Regulatory Information Division (2136), U.S. Environmental Protection Agency, 401 M Street, S.W., Washington, D.C. 20460; telephone: (202) 260–2740.

The emergency request for ICR approval along with the Interim Final Rule were necessary so that implementing regulations would be in place contemporaneously with the United States' ratification of the Protocol and in order to implement its obligations under the Protocol as soon as the Protocol entered into force. The Interim Final Rule provides nongovernmental operators with the specific environmental documentation requirements they must meet in order to comply with the Protocol.

Nongovernmental operators, including tour operators, conducting expeditions to Antarctica are required to submit environmental documentation to EPA that evaluates the potential environmental impact of their proposed activities. If EPA has no comments, or if the documentation is satisfactorily revised in response to EPA's comments, and the operator does not receive a notice from EPA that the environmental documentation does not meet the requirements of Article 8 and Annex I of the Protocol and the provisions of the interim final regulations, the operator will have no further obligations pursuant to the applicable requirements of the interim final regulations provided that any appropriate measures, which may include monitoring, are put in place to assess and verify the impact of the activity.

The type of environmental document required depends upon the nature and intensity of the environmental impacts that could result from the activity under consideration. The Interim Final Rule provides for incorporation of material into an environmental document by referring to it in the document when the effect will be to reduce paperwork. Further, an operator may include more than one proposed expedition within one environmental document and one environmental document may also be used to address expeditions being carried out by more than one operator further reducing burden. In addition, EPA anticipates that operators will likely use the environmental documents submitted for their 1997–1998 expeditions, with appropriate revisions, for submittal in subsequent years under the Interim Final Rule.

This proposed action is merely an extension of the effective date of the Interim Final Rule, and is being proposed in part in response to Antarctica tour operators. The EPA is preparing the ICR Supporting Statement for the Interim Final Rule taking into account the experience of the Federal agencies and the nongovernmental operators, including tour operators, subject to the Interim Final Rule during the 1997–1998 austral season covered by OMB's emergency ICR approval. A **Federal Register** Notice will be published informing the public of the availability of the Supporting Statement for review and comment. Following the public comment period, EPA will address any relevant comments and then request OMB's approval of the ICR for the Interim Final Rule prior to the information collection schedule for the 1998–1999 austral season. For the limited time the Interim Final Rule will be in effect, the EPA anticipates that operators will, as they did for the 1997–1998 austral season, make one submittal per year for all of their expeditions for that year. No capital costs or operational and maintenance costs are anticipated to be incurred as a result of the ICR for the Interim Final Rule. The following estimates were provided in the Interim Final Rule promulgated on April 30, 1997 (62 FR 83, 23538 (April 30, 1997)).

Frequency of Reporting: Once per year.

Affected Public: Businesses, other nongovernmental entities including for profit entities, and not for profit institutions.

Number of Respondents: 8.

Estimated Average Time Per Respondent: 120 Hours.

Total Annual Burden Hours: 960.

Burden means the total time, effort, or financial resources expended by persons to generate, maintain, retain, or disclose or provide information to or for a Federal agency. This includes the time needed to: review instructions; develop, acquire, install, and utilize technology and systems for the purposes of collecting, validating, and verifying

information, processing and maintaining information, and disclosing and providing information; adjust the existing ways to comply with any previously applicable instructions and requirements; train personnel to be able to respond to a collection of information; search data sources; complete and review the collection of information; and transmit or otherwise disclose the information.

An agency may not conduct or sponsor, and a person is not required to respond to, a collection of information unless it displays a currently valid OMB control number. The OMB control numbers for EPA's regulations are listed in 40 CFR Part 9 and 48 CFR Chapter 15.

V. National Technology Transfer and Advancement Act

Under the National Technology Transfer and Advancement Act, 15 U.S.C. 272 note, EPA must use voluntary consensus standards to carry out policy objectives or activities unless it would be impractical to do so. In this case, such standards, applicable to this regulation, do not exist. Accordingly, the use of such standards is not required.

VI. Submission to Congress and the Comptroller General

The Congressional Review Act, 5 U.S.C. 801 *et seq.*, as added by the Small Business Regulatory Enforcement Fairness Act of 1996, generally provides that, before a rule may take effect, the agency promulgating the rule must submit a rule report, which includes a copy of the rule, to each House of the Congress and to the Comptroller General of the United States. EPA will submit a report containing the final rule and other required information to the U.S. Senate, the U.S. House of Representatives, and the Comptroller General of the United States prior to publication of the final rule in the **Federal Register**. This proposed rule is not a ''major rule'' as defined by 5 U.S.C. 804(2).

List of Subjects in 40 CFR Part 8

Environmental protection, Antarctica, Enforcement, Environmental documentation, Environmental impact assessment, Penalties, Prohibited acts.

Dated: April 2, 1998.

Steven A. Herman,

Assistant Administrator, Office of Enforcement and Compliance Assurance.

[FR Doc. 98–10007 Filed 4–14–98; 8:45 am]

BILLING CODE 6560–50–P

ENVIRONMENTAL PROTECTION AGENCY

40 CFR Part 261

[SW–FRL–5996–2]

Hazardous Waste Management System; Identification and Listing of Hazardous Waste; Proposed Exclusion

AGENCY: Environmental Protection Agency.

ACTION: Proposed rule and request for comment.

SUMMARY: The Environmental Protection Agency (EPA) is proposing to grant a petition submitted by Kokoku Steel Cord Corporation in Scottsburg, Indiana to exclude (or ''delist'') certain solid wastes generated by its wastewater treatment plant from the lists of hazardous wastes contained in Title 40 of the Code of Federal Regulations, Subpart D of Part 261. Since submitting the petition, Kokoku Steel Cord has been bought by American Steel Cord, a division of Michelin North America, Inc. and the name of the facility has been changed to American Steel Cord. American Steel Cord has stated that no changes have occurred in the raw material or the processes generating the waste as described in the original petition. American Steel Cord has adopted the petition as its own, and has certified that all information contained in the original petition and in subsequent submittals is true, accurate, and complete. This action responds to a ''delisting'' petition submitted under § 260.20, which allows any person to petition the Administrator to modify or revoke any provision of Parts 260 through 266, 268 and 273, and under § 260.22, which specifically provides generators the opportunity to petition the Administrator to exclude a waste on a ''generator-specific'' basis from the hazardous waste lists. This proposed decision is based on an evaluation of waste-specific information provided by the petitioner. If this proposed decision is finalized, the petitioned waste will be conditionally excluded from the requirements of the hazardous waste regulations under the Resource Conservation and Recovery Act (RCRA).

DATES: EPA is requesting public comments on this proposed decision. Comments must be received in writing by June 1, 1998. Comments postmarked after the close of the comment period will be stamped ''late.''

Any person may request a hearing on this proposed decision by filing a request with Norman R. Niedergang, Director, Waste, Pesticides and Toxics Division, at the address below, by May 15, 1998. The request must contain the information prescribed in § 260.20(d).

ADDRESSES: Two copies of any comments should be sent to Judy Kleiman, Waste Management Branch (DRP–8J), U.S. EPA Region 5, 77 W. Jackson Blvd., Chicago, IL 60604.

Requests for a hearing should be addressed to Norman R. Niedergang, Director, Waste, Pesticides and Toxics Division (D–8J), U.S. EPA Region 5, 77 W. Jackson Blvd., Chicago, IL 60604.

The RCRA regulatory docket for this proposed rule is located at the U.S. EPA Region 5, 77 W. Jackson Blvd., Chicago, IL 60604, and is available for viewing from 8:00 a.m. to 5:00 p.m., Monday through Friday, excluding Federal holidays. Call Judy Kleiman at (312) 886–1482 for appointments. The public may copy material from the regulatory docket at $0.15 per page.

FOR FURTHER INFORMATION CONTACT: For technical information concerning this notice, contact Judy Kleiman at the address above or at (312) 886–1482.

SUPPLEMENTARY INFORMATION:

I. Background

A. Authority

On January 16, 1981, as part of its final and interim final regulations implementing Section 3001 of RCRA, EPA published an amended list of hazardous wastes from non-specific and specific sources. This list has been amended several times, and is published in §§ 261.31 and 261.32. These wastes are listed as hazardous because they typically and frequently exhibit one or more of the characteristics of hazardous wastes identified in Subpart C of Part 261 (*i.e.*, ignitability, corrosivity, reactivity, and toxicity) or meet the criteria for listing contained in § 261.11(a)(2) or (a)(3).

Individual waste streams may vary, however, depending on raw materials, industrial processes, and other factors. Thus, while a waste that is described in these regulations generally is hazardous, a specific waste from an individual facility meeting the listing description may not be. For this reason, §§ 260.20 and 260.22 provide an exclusion procedure, allowing a person to demonstrate that a specific waste from a particular generating facility should not be regulated as a hazardous waste.

To have its waste excluded, a petitioner must show that the waste generated at the facility does not meet any of the criteria for which the waste was listed. See § 260.22(a)(1) and the background documents for the listed wastes. In addition, the Hazardous and Solid Waste Amendments (HSWA) of 1984 require EPA to consider any

factors (including additional constituents) other than those for which the waste was listed, if there is a reasonable basis to believe that such additional factors could cause the waste to be hazardous. See § 260.22(a)(2). Accordingly, a petitioner also must demonstrate that the waste does not exhibit any of the hazardous waste characteristics (*i.e.*, ignitability, corrosivity, reactivity, and toxicity), and must present sufficient information for EPA to determine whether the waste contains any other constituents at hazardous levels. Although a waste which is ''delisted'' (*i.e.*, excluded) has been evaluated to determine whether or not it exhibits any of the characteristics of hazardous waste, a generator remains obligated under RCRA to determine whether or not its waste remains non-hazardous based on the hazardous waste characteristics.

In addition, residues from the treatment, storage, or disposal of listed hazardous wastes and mixtures containing listed hazardous wastes are also considered hazardous wastes. See § 261.3(a)(2)(iv) and (c)(2)(I), referred to as the ''mixture'' and ''derived-from'' rules, respectively. Such wastes are also eligible for exclusion and remain hazardous wastes until excluded. On December 6, 1991, the U.S. Court of Appeals for the District of Columbia vacated the ''mixture/derived from'' rules and remanded them to EPA on procedural grounds. *Shell Oil Co.* v. *EPA*, 950 F.2d 741 (D.C. Cir. 1991). On March 3, 1992, EPA reinstated the mixture and derived-from rules, and solicited comments on other ways to regulate waste mixtures and residues (57 FR 7628). EPA plans to address issues related to waste mixtures and residues in a future rulemaking.

B. Approach Used to Evaluate This Petition

American Steel Cord's petition requests a delisting for a listed hazardous waste. In making the initial delisting determination, EPA evaluated the petitioned waste against the listing criteria and factors cited in § 261.11(a). Based on this review, EPA tentatively agreed with the petitioner, pending public comment, that the waste is non-hazardous with respect to the original listing criteria. If EPA had found, based on this review, that the waste remained hazardous based on the factors for which the waste was originally listed, EPA would have proposed to deny the petition.

EPA then evaluated the waste with respect to other factors or criteria to assess whether there is a reasonable basis to believe that other factors could cause the waste to be hazardous. EPA considered whether the waste is acutely toxic, and considered the concentration of the constituents in the waste, the toxicity of the constituents, their tendency to migrate and to bioaccumulate, their persistence in the environment once released from the waste, plausible and specific types of management of the petitioned waste, the quantities of waste generated, and waste variability.

For this delisting determination, EPA used the gathered information to identify plausible exposure routes (*i.e.*, ground water, surface water, air) for hazardous constituents present in the petitioned waste. EPA determined that disposal in a Subtitle D landfill is the most reasonable, worst-case disposal scenario for American Steel Cord's petitioned waste, and that the major exposure route of concern would be ingestion of contaminated ground water. Therefore, EPA used a fate and transport model to predict the maximum concentrations of hazardous constituents that may be released from the petitioned waste after disposal and to determine the potential impact of the disposal of American Steel Cord's petitioned waste on human health and the environment. Specifically, EPA used the maximum estimated waste volume and the health based numbers as inputs to estimate maximum allowable leachate concentrations in the ground water at a hypothetical receptor well down gradient from the disposal site at an assumed risk of 10^{-6} used in delisting decision-making for the hazardous constituents of concern. The maximum concentrations detected in the leachate were then compared directly to the maximum allowable levels determined by the volume dependent dilution attenuation factor times the health-based level.

EPA believes that this fate and transport model represents a reasonable worst-case scenario for disposal of the petitioned waste in a landfill, and that a reasonable worst-case scenario is appropriate when evaluating whether a waste should be relieved of the protective management constraints of RCRA Subtitle C (Parts 260 through 266 and 268). The use of a reasonable worst-case scenario results in conservative values for the compliance-point concentrations and ensures that the waste, once removed from hazardous waste regulation, should not pose a threat to human health or the environment.

EPA also considers the applicability of ground-water monitoring data during the evaluation of delisting petitions. In this case, EPA determined that it would be inappropriate to request ground-water monitoring data because American Steel Cord currently disposes of the petitioned waste off-site. For petitioners using off-site management, EPA believes that, in most cases, the ground water monitoring data would not be meaningful. Most commercial land disposal facilities accept waste from numerous generators. Any ground water contamination or leachate would be characteristic of the total volume of waste disposed of at the site. In most cases, EPA believes that it would be impossible to isolate ground water impacts associated with any one waste disposed of in a commercial landfill. Therefore, the EPA did not request ground water monitoring data from American Steel Cord.

From the evaluation of the delisting petition, a list of constituents was developed for annual verification testing. Proposed maximum allowable leachable concentrations for these constituents were derived by back-calculating from the delisting health-based levels through the proposed fate and transport model. These concentrations (*i.e.*, ''delisting levels'') are part of the verification testing conditions of this proposed exclusion.

Finally, the Hazardous and Solid Waste Amendments of 1984 specifically require EPA to provide notice and an opportunity for comment before granting or denying a final exclusion. Thus, a final decision will not be made until all timely public comments (including those at public hearings, if any) on today's proposal are addressed.

II. Disposition of Delisting Petition

American Steel Cord is located at Route 1 Box 357K, Scottsburg, Indiana, 47170.

A. Petition for Exclusion

American Steel Cord, located in Scottsburg, Indiana, manufactures steel cord for use in steel belted radial tires. In the manufacturing process, rods of raw carbon steel are cleaned and drawn down by a series of dies to reduce the diameter and produce a thin wire. The wire is then electrically plated, first with a non-cyanidic base coat of copper followed by a non-cyanidic coat of zinc. The wastewater treatment plant (WWTP) filter press sludge generated from this process is presently listed as EPA Hazardous Waste No. F006: ''Wastewater treatment sludges from electroplating operations except from the following processes: (1) Sulfuric acid anodizing of aluminum; (2) tin plating on carbon steel; (3) zinc plating (segregated basis) on carbon steel; (4) aluminum or zinc-alumiuum plating on

carbon steel; (5) cleaning/stripping associated with tin, zinc and aluminum plating on carbon steel; and (6) chemical etching and milling of aluminum.'' The constituents of concern for EPA Hazardous Waste No F006 are cadmium, hexavalent chromium, nickel, and cyanide (complexed) (see appendix VII of part 261).

American Steel Cord petitioned to exclude its WWTP filter press sludge because it believes that the petitioned waste does not meet any of the criteria under which the waste was listed and that there are no additional constituents or factors that could cause the waste to be hazardous. Review of this petition included consideration of the original listing criteria, as well as the additional factors required by the Hazardous and Solid Waste Amendments (HSWA) of 1984. See Section 222 of HSWA, 42 USC 6921(f), and § 260.22.

B. Background

On September 1, 1993, Kokoku Steel Cord Corporation, now American Steel Cord petitioned EPA to exclude an annual volume of 500 cubic yards of WWTP filter press sludge from the list of hazardous wastes contained in § 261.31. American Steel Cord subsequently provided additional information to complete its petition and to amend the annual volume of petitioned waste to 950 cubic yards. In support of its petition, American Steel Cord submitted detailed descriptions and schematic diagrams of its manufacturing and wastewater treatment processes, and analytical testing results for representative samples of the petitioned waste, including (1) the hazardous characteristics of ignitability, corrosivity, reactivity, and toxicity; (2) total constituent analysis for the eight toxicity characteristic metals listed in § 261.24 plus nickel and Toxicity Characteristic Leaching Procedure (TCLP, SW–846 Method 1311) analyses for the eight toxicity characteristic metals, plus copper, nickel, thallium, vanadium, and zinc; (3) total constituent analyses for 121 volatile and semi-volatile organic compounds and TCLP analyses for those compounds detected; (4) total constituent analysis for sulfide and cyanide; (5) TCLP analyses for cyanide; and (6) analysis for total oil and grease, and percent solids.

American Steel Cord produces steel cord for use in steel belted radial tires. Raw carbon steel rods are cleaned in a hydrochloric acid bath and then placed into two cold water rinses. The effluent from the cold water rinses is pumped to the holding tanks of the WWTP. The steel rod is placed into a hot water rinse and then into a bonder solution which puts a zinc coating on the rod. The rod is rinsed and placed into a neutralization tank, then heated and cooled in preparation for the dry drawing process. There is no discharge of materials to the wastewater treatment plant from the hot water rinse tank, bonder tank, bonder rinse tank or the neutralization tank. Sludges from the bottoms of these tanks are shipped off-site for disposal.

The wire is hydraulically pulled or ''drawn'' through a series of six dies followed by a series of seven dies. Each die extrudes the wire out to a smaller diameter. There are no materials discharged to the wastewater treatment plant from the dry draw process. After the wire has been reduced to the proper diameter, it is fed into a furnace at 1,000 degrees C to burn off any impurities remaining on the wire. The wire is then pulled through a 30% sulfuric acid bath followed by a water rinse. Splashes from either of these tanks are pumped into the 'strong acid tank'. Water from the rinse tank is continually pumped directly to the WWTP holding tanks. The steel wire is then put into a 15% sodium hydroxide bath and rinse. Splashes are pumped into the 'strong alkaline tank'. Next, the wire is electrically plated with a non-cyanidic base coat of copper. The wire is then rinsed and electroplated with a non-cyanidic coat of zinc. The zinc plating is followed by a water rinse. Effluent from the copper rinse and the zinc rinse are pumped to the WWTP holding tanks. Splashes from the copper plating and copper rinse tanks are collected in the 'strong copper tank' and splashes from the zinc plating and zinc rinse tanks are collected in the 'strong acid tank'. The strong acid tank, the strong copper tank, and the strong alkaline tank are pumped to the WWTP holding tanks on a regular basis.

The plated wire is fed into a diffusion fluidized bed furnace to form a brass plating. After the wire is brassed, the diameter is further reduced by a wet draw process through a series of dies containing a lubricating material. The wire is then stranded or twisted together to form a wire cord according to specifications.

Treatment at the WWTP is a batch operation. The wastewaters collected from the various processes in the two holding tanks are neutralized by the addition of a lime slurry in a neutralization tank where the pH is carefully controlled between 9.5 and 10.5. The water is then pumped into a clarifier where polymers are added to aid flocculation. Effluent from the clarifier is discharged to the City of Scottsburg's Wastewater Treatment Plant under an NPDES permit. Sludge from the clarifier is pumped into two solids holding tanks. When the holding tanks are full, the sludge is pumped to a plate filter press and dewatered. Effluent from the filter press is either discharged to the Scottsburgh Treatment Plant or it is pumped to the head of the plant for retreatment. The filtercake falls off or is scraped from the plates into two hoppers and is transferred to a roll-off dumpster. The filtercake is currently being disposed of as hazardous waste off site.

American Steel Cord submitted a signed certification stating that, based on projected annual waste generation, the maximum annual generation rate of WWTP filter press sludge (filtercake) will not exceed 950 cubic yards (approximately 950 tons) per year. The EPA reviews a petitioner's estimates and, on occasion, has requested a petitioner to reevaluate the estimated waste generation rate. EPA accepts American Steel Cord's estimate.

C. Waste Analysis

American Steel Cord developed a list of analytical constituents based on a review of facility processes, Material Safety Data Sheets for raw materials and chemical additives used in the manufacturing process, and recommendations contained in EPA delisting guidance. See Petitions to Delist Hazardous Wastes, A Guidance Manual, dated March 1993.

For American Steel Cord's petition, the WWTP filtercake sludge was sampled once a week for 4 weeks. Samples were collected on February 2, February 9, February 18, March 3, 1993, April 22, May 4, May 21, and June 11, 1993. In response to a request by the EPA, American Steel Cord also collected additional samples of the filtercake on January 23, January 29, February 5, and February 11, 1997 using the same procedures as for the previous samples. Since the filter press is run only on a batch basis, the collection of samples was done over a period of time in order to characterize temporal variability. At each sampling event, the two hoppers were each divided into 6 sections and a sample was taken at various depths from each of the 12 sections. All samples were collected with a trowel. Each sample was packed in an appropriately labeled bottle. The 12 grab samples collected were composited by the lab.

To quantify the total constituent and leachate concentrations, American Steel Cord used SW–846 methods 7061 and

7061A[1] for arsenic; methods 7080 and 7080A for barium; method 7130 for cadmium; method 7190 for chromium; method 7210 for copper; method 7420 for lead; methods 7470, 7470A and 7471 for mercury; method 7520 for nickel; methods 7741 and 7741A for selenium; methods 7760 and 7760A for silver; method 7840 for thallium; method 7910 for vanadium; method 7950 for zinc; methods 9010 and 9010A for total cyanide; methods 9030 and 9030A for sulfide; methods 8240 and 8260 for volatile organic compounds; and method 8270 for semi-volatile organic compounds. Using SW–846 method 9071, American Steel Cord determined that the samples of the petitioned waste had a maximum oil and grease content of 199 mg/kg. American Steel Cord also used these methods on the leachate obtained using the Toxicity Characteristic Leaching Procedure (SW–846 method 1311), as described below, to determine leachable levels of cyanide, metals, volatile organic compounds, and semi-volatile organic compounds.

Characteristic testing of the samples included analysis of reactive cyanide (SW–846 Method 7.3.3.2) and reactive sulfide (SW–846 Method 7.3.4.2).

Table 1 presents the maximum total and leachate concentrations for 13 metals, total and leachate concentration for cyanide, and total sulfide. Table 1 also includes maximum total concentrations for reactive cyanide and reactive sulfide.

The detection limits presented in Table 1 represent the lowest concentrations quantifiable by American Steel Cord when using the appropriate SW–846 methods to analyze its waste. (Detection limits may vary according to the waste and waste matrix being analyzed, i.e., the ''cleanliness'' of waste matrices varies and ''dirty'' waste matrices may cause interferences, thus raising detection limits.)

TABLE 1.—MAXIMUM TOTAL CONSTITUENT AND LEACHATE CONCENTRATIONS [1]

[WWTP Filtercake Sludge]

Inorganic constituents	Total constituent analyses(mg/kg)	TCLP leachate analyses (mg/l)
Arsenic	4.9	.003

[1] A letter at the end of the method number indicates the method has been updated since originally promulgated in SW–846. Additional samples collected in 1997 were analyzed by the most current version of the method. For constituents which were subsequently analyzed by updated versions of a method, both versions of the method are noted.

TABLE 1.—MAXIMUM TOTAL CONSTITUENT AND LEACHATE CONCENTRATIONS [1]—Continued

[WWTP Filtercake Sludge]

Inorganic constituents	Total constituent analyses(mg/kg)	TCLP leachate analyses (mg/l)
Barium	32.8	2.1
Cadmium	.7	0.15
Chromium (total)	14	0.26
Copper	1990	0.1
Lead	28	0.16
Mercury	0.1	0.001
Nickel	109	0.73
Selenium	0.02	0.002
Silver	1.13	0.02
Thallium	8.0	<2
Vanadium	6.0	<2
Zinc	21,000	1.48
Cyanide (total)	15	.06
Sulfide (total)	96	NA
Cyanide (reactive)	.25	NA
Sulfide (reactive)	34	NA

[1] These levels represent the highest concentration of each constituent found in any one sample. These levels do not necessarily represent the specific levels found in one sample.

< Denotes that the constituent was not detected at the detection limit specified in the table.

NA Denotes that the constituent was not analyzed.

American Steel Cord analyzed the samples of petitioned waste for 58 volatile and 63 semi-volatile organic compounds. Table 2 presents the maximum total and leachate concentrations for all detected organic constituents in American Steel Cord's waste samples.

TABLE 2.—MAXIMUM TOTAL CONSTITUENT AND LEACHATE CONCENTRATIONS [1]

[WWTP Filtercake Sludge]

Organic constituents	Total constituent analyses (mg/kg)	TCLP leachate analyses (mg/l)
Acetone	.247	.736
Anthracene	.264	<.05
Butyl benzyl phthlate	NA	.1
Carbon disulfide	.021	<.005
carbon tetrachloride	.177	<.005
Chloroform	.020	.042
1,4-Dichlorobenzene	<.16	.014
cis-1,2-Dichloroethene	NA	.022
Fluoranthene	.166	<.05
Methylene chloride	.100	.065
Naphthalene	1.848	.009
Phenanthrene	.297	<.05
Styrene	<.01	.014
Tetrachloroethene	<.01	.008
Toluene	<.005	.017

TABLE 2.—MAXIMUM TOTAL CONSTITUENT AND LEACHATE CONCENTRATIONS [1]—Continued

[WWTP Filtercake Sludge]

Organic constituents	Total constituent analyses (mg/kg)	TCLP leachate analyses (mg/l)
Xylenes	.022	.033

[1] These levels represent the highest concentration of each constituent found in any one sample. These levels do not necessarily represent the specific levels found in one sample.

< Denotes that the constituent was not detected at the detection limit specified in the table.

EPA does not generally verify submitted test data before proposing delisting decisions. The sworn affidavit submitted with the petition binds the petitioner to present truthful and accurate results.

D. EPA Evaluation

EPA has reviewed the sampling procedures used by American Steel Cord and has determined that they satisfy EPA criteria for collecting representative samples. EPA considered the appropriateness of alternative waste management scenarios for American Steel Cord's WWTP filter press sludge and decided, based on the information provided in the petition, that disposal in a Subtitle D landfill is the most reasonable, worst-case scenario for this waste. Under a landfill disposal scenario, the major exposure route of concern for any hazardous constituents would be ingestion of contaminated ground water. EPA, therefore, evaluated American Steel Cord's petitioned waste using the modified EPA Composite Model for Landfills (EPACML) which predicts the potential for ground water contamination from wastes that are landfilled. See 56 FR 32993 (July 18, 1991), 56 FR 67197 (December 30, 1991), and the RCRA public docket for these notices for a detailed description of the EPACML model, the disposal assumptions, and the modifications made for delisting. This model, which includes both unsaturated and saturated zone transport modules, was used to predict reasonable, worst-case contaminant levels in ground water at a compliance point (i.e., a receptor well serving as a drinking-water supply). Specifically, the model estimated the dilution/attenuation factor (DAF) resulting from subsurface processes such as three-dimensional dispersion and dilution from ground water recharge for a specific volume of waste. The DAFs generated using the EPACML

vary from a maximum of 100 for smaller annual volumes of waste (i.e., less than 1,000 cubic yards per year) to DAFs approaching ten for larger volume wastes (i.e., 400,000 cubic yards per year).

Typically, EPA uses the maximum annual waste volume to derive a petition-specific DAF. American Steel Cord's maximum waste volume of 950 cubic yards per year corresponds to a DAF of 100. EPA's evaluation used a DAF of 100 times the health based level (HBL) used in delisting decision making to determine the maximum allowable leachate concentrations for American Steel Cord's waste (see Table 3).

TABLE 3.—EPACML: MAXIMUM ALLOWABLE LEACHATE CONCENTRATIONS

[WWTP Filtercake Sludge]

Inorganic and organic constituents	Maximum leachate concentrations in waste (mg/l)	Levels of regulatory concern (mg/l)	HBL [1]
Arsenic	0.003	5	0.05
Barium	2.1	200	2
Cadmium	.15	.5	.005
Chromium (total)	.26	10	0.1
Copper	.1	130	1.3
Lead	.16	1.5	.015
Mercury	.001	.2	.002
Nickel	.73	10	0.1
Selenium	.002	5	.05
Silver	.02	20	.2
Zinc	1.48	1,000	10
Cyanide	.06	20	.2
Acetone	.736	400	4
Benzo butyl phthlate	.1	10	.1
Chloroform	.042	10	.01
1,4-Dichlorobenzene	.0014	7.5	.075
cis-1,2-Dichloroethene	0.022	7	.07
Methylene chloride	.065	.5	.005
Naphthalene	.009	100	1.0
Styrene	.014	10	0.1
Tetrachloroethene	.008	.5	.005
Toluene	.017	100	1.0
Xylene	.033	1,000	10

[1] See ''Docket Report on Health-Based Levels and Solubilities Used in the Evaluation of Delisting Petitions,'' December 1994, located in the RCRA public docket for today's notice.

For inorganic constituents, the maximum reported leachate concentrations of arsenic, barium, cadmium, chromium (total), copper, lead, mercury, nickel, selenium, silver, and zinc in the WWTP filtercake sludge were well below the maximum allowable leachate concentrations. EPA did not evaluate the mobility of the remaining inorganic constituents (i.e., thallium and vanadium) from American Steel Cord's waste because they were not detected in the leachate using the appropriate analytical test methods (see Table 1). EPA believes that it is inappropriate to evaluate non-detectable concentrations of a constituent of concern in its modeling efforts if the non-detectable value was obtained using the appropriate analytical method. If a constituent cannot be detected (when using the appropriate analytical method with an adequate detection limit), EPA assumes that the constituent is not present and therefore does not present a threat to human health or the environment.

EPA also evaluated the potential hazards of the organic constituents detected in the TCLP extract of the samples (i.e., acetone, butyl benzyl phthlate, chloroform, 1,4-dichlorobenzene 1,2-dichloroethene, methylene chloride, naphthalene, styrene, tetrachloroethene, toluene, 1,2,4-trimethyl benzene, and xylene). The maximum leachate concentrations detected are significantly below the calculated maximum allowable levels.

After reviewing American Steel Cord's processes, EPA accepts American Steel Cord's analysis that no other hazardous constituents, other than those tested for, are likely to be present in the waste, and that any migration of hazardous constituents from the waste would result in concentrations below delisting health-based levels of concern. In addition, on the basis of test results and information provided by American Steel Cord pursuant to § 260.22, EPA concludes that the petitioned waste does not exhibit any of the characteristics of ignitability, corrosivity, reactivity, or toxicity.

In its evaluation of American Steel Cord's petition, EPA also considered the potential impact of the petitioned waste via non-ground water routes (i.e., air emission and surface runoff). With regard to airborne dispersal, EPA believes that no appreciable air releases are likely from American Steel Cord's waste under any likely disposal conditions. Therefore, there is no substantial present or potential hazard to human health from airborne exposure to constituents from American Steel Cord's petitioned waste.

EPA also considered the potential impact of the petitioned wastes via a surface water route. EPA believes that containment structures at municipal solid waste landfills can effectively control surface water run-off, as the Subtitle D regulations (see 56 FR 50978, October 9, 1991) prohibit pollutant discharges into surface waters. Furthermore, the concentrations of any hazardous constituents in the run-off will tend to be lower than the extraction procedure test results reported in today's notice because of the aggressive acidic media used for extraction in the TCLP. EPA believes that, in general, leachate derived from the waste is unlikely to directly enter a surface water

body without first traveling through the saturated subsurface where dilution/attenuation of hazardous constituents will also occur. Leachable concentrations provide a direct measure of the solubility of a toxic constituent in water, and are indicative of the fraction of the constituent that may be mobilized in surface water, as well as ground water. The reported TCLP data show that the constituents which might leach from American Steel Cord's waste and be released to surface water would not be likely to exceed the health-based levels of concern. EPA, therefore, concludes that American Steel Cord's waste is not a significant hazard to human health or the environment via the surface water exposure pathway.

E. Conclusion

Based on descriptions of the process from which the petitioned waste is derived, descriptions of American Steel Cord's wastewater treatment process, and analytical characterization of the petitioned waste, EPA believes that American Steel Cord has successfully demonstrated that the petitioned waste is not hazardous. EPA, therefore, proposes to grant an exclusion to American Steel Cord for its WWTP filtercake sludge described in its petition as EPA Hazardous Waste No. F006. If made final, the proposed exclusion will apply only to 950 cubic yards (approximately equivalent to 950 tons) of petitioned waste generated annually, on a calendar year basis. The facility must treat waste generated in excess of 950 cubic yards per year as hazardous. If either the manufacturing or treatment processes are altered such that an adverse change in waste composition occurs (*e.g.,* higher levels of hazardous constituents), this exclusion would no longer be valid.

Although management of the waste covered by this petition would be removed from Subtitle C jurisdiction upon final promulgation of an exclusion, this exclusion applies only where this waste is disposed of in a Subtitle D landfill which is permitted, licensed, or registered by a State to manage municipal or industrial solid waste.

F. Verification Testing Conditions

EPA is proposing to require American Steel Cord to demonstrate on an annual basis that the constituents of concern in the petitioned waste do not exceed the levels of concern in paragraph 1 below. These levels are based on delisting health-based values and a DAF of 100. American Steel Cord must analyze four representative samples of the WWTP filtercake sludge on an annual, calendar-year basis using methods with appropriate detection levels and quality control procedures. If the level of any constituent measured in any sample of WWTP filtercake sludge exceeds the levels set forth in paragraph 1 below, then the waste is hazardous and must be managed in accordance with Subtitle C of RCRA.

1. Delisting Levels

Concentrations measured in the TCLP extract of the waste of the following constituents must not exceed the following levels (mg/l).

Arsenic—5; Barium—200; Cadmium—.5; Chromium —10; Copper— 130; Lead—1.5; Mercury—.2; Nickel—10; Selenium—5; Silver—20; Zinc—1,000; Acetone—400; Benzo butyl phthlate—10; Chloroform— 10; 1,4-Dichlorobenzene—7.5; cis-1,2-Dichloroethane—7; Methylene chloride—.5; Naphthalene—100; Styrene—10; Tetrachloroethene—.5; Toluene—100; Xylene—1,000.

2. Changes in Operating Conditions

If American Steel Cord significantly changes the manufacturing or treatment process or the chemicals used in the manufacturing or treatment process, American Steel Cord may handle the WWTP filtercake sludge generated from the new process under this exclusion after the facility has demonstrated that the waste meets the levels set in paragraph 1 and that no new hazardous constituents listed in Appendix VIII of Part 261 have been introduced.

3. Data Submittals

The data obtained through annual verification testing or paragraph 2 must be submitted to U.S. EPA Region 5, 77 W. Jackson Blvd., Chicago, IL 60604, within 60 days of sampling. Records of operating conditions and analytical data must be compiled, summarized, and maintained on site for a minimum of five years and must be made available for inspection. All data must be accompanied by a signed copy of the certification statement in 260.22(i)(12).

III. Effect on State Authorizations

This proposed exclusion, if promulgated, would be issued under the Federal (RCRA) delisting program. States, however, may impose more stringent regulatory requirements than EPA, pursuant to section 3009 of RCRA. These more stringent requirements may include a provision which prohibits a Federally-issued exclusion from taking effect in the State. Because a petitioner's waste may be regulated under a dual system (i.e., both Federal (RCRA) and State (non-RCRA) programs), petitioners are urged to contact State regulatory authorities to determine the current status of their wastes under the State laws.

Furthermore, some States are authorized to administer a delisting program in lieu of the Federal program (i.e., to make their own delisting decisions). Therefore, this proposed exclusion, if promulgated, may not apply in those authorized States. If the petitioned waste will be transported to any State with delisting authorization, American Steel Cord must obtain delisting authorization from that State before the waste may be managed as nonhazardous in the State.

IV. Effective Date

This rule, if made final, will become effective immediately upon such final publication. The Hazardous and Solid Waste Amendments of 1984 amended Section 3010 of RCRA to allow rules to become effective in less than six months when the regulated community does not need the six-month period to come into compliance. That is the case here, because this rule, if finalized, would reduce the existing requirements for a person generating a hazardous waste. In light of the unnecessary hardship and expense that would be imposed on this petitioner by an effective date six months after publication and the fact that a six-month deadline is not necessary to achieve the purpose of Section 3010, EPA believes that this exclusion should be effective immediately upon final publication. These reasons also provide a basis for making this rule effective immediately, upon final publication, under the Administrative Procedure Act, 5 USC 553(d).

V. Regulatory Impact

Under Executive Order 12291, EPA must judge whether a regulation is ''major'' and therefore subject to the requirement of a Regulatory Impact Analysis. The proposal to grant an exclusion is not major, since its effect, if promulgated, would be to reduce the overall costs and economic impact of EPA's hazardous waste management regulations. This reduction would be achieved by excluding waste generated at a specific facility from EPA's lists of hazardous wastes, thereby enabling this facility to manage its waste as non-hazardous. There is no additional impact, therefore, due to today's proposed rule. This proposal is not a major regulation; therefore, no Regulatory Impact Analysis is required.

VI. Regulatory Flexibility Act

Pursuant to the Regulatory Flexibility Act, 5 U.S.C. 601–612, whenever an agency is required to publish a general notice of rulemaking for any proposed or final rule, it must prepare and make available for public comment a regulatory flexibility analysis which describes the impact of the rule on small entities (i.e., small businesses, small organizations, and small governmental jurisdictions). The Administrator or delegated representative may certify, however, that the rule will not have a significant economic impact on a substantial number of small entities.

This rule, if promulgated, will not have an adverse economic impact on small entities since its effect would be to reduce the overall costs of EPA's hazardous waste regulations. Accordingly, I hereby certify that this proposed regulation, if promulgated, will not have a significant economic impact on a substantial number of small entities. This regulation, therefore, does not require a regulatory flexibility analysis.

VII. Paperwork Reduction Act

Information collection and record-keeping requirements associated with this proposed rule have been approved by the Office of Management and Budget (OMB) under the provisions of the Paperwork Reduction Act of 1980 (P.L. 96–511, 44 U.S.C. 3501 *et seq.*) and have been assigned OMB Control Number 2050–0053.

VIII. Unfunded Mandates Reform Act

Under section 202 of the Unfunded Mandates Reform Act of 1995 (UMRA), Public Law 104–4, which was signed into law on March 22, 1995, EPA generally must prepare a written statement for rules with Federal mandates that may result in estimated costs to State, local, and tribal governments in the aggregate, or to the private sector, of $100 million or more in any one year. When such a statement is required for EPA rules, under section 205 of the UMRA, EPA must identify and consider alternatives, including the least costly, most cost-effective or least burdensome alternative that achieves the objectives of the rule. EPA must select that alternative, unless the Administrator explains in the final rule why it was not selected or it is inconsistent with law. Before EPA establishes regulatory requirements that may significantly or uniquely affect small governments, including tribal governments, it must develop under section 203 of the UMRA a small government agency plan. The plan must provide for notifying potentially affected small governments, giving them meaningful and timely input in the development of EPA regulatory proposals with significant Federal intergovernmental mandates, and informing, educating, and advising them on compliance with the regulatory requirements. The UMRA generally defines a Federal mandate for regulatory purposes as one that imposes an enforceable duty upon State, local or tribal governments or the private sector. EPA finds that today's proposed delisting decision is deregulatory in nature and does not impose any enforceable duty upon State, local or tribal governments or the private sector. In addition, the proposed delisting does not establish any regulatory requirements for small governments and so does not require a small government agency plan under UMRA section 203.

IX. The Congressional Review Act

The Congressional Review Act, 5 U.S.C. 801, *et seq.*, as amended by the Small Business Regulatory Enforcement Fairness Act of 1996, (''CRA'') generally provides that before a rule may take effect, the agency promulgating the rule must submit a rule report, which includes a copy of the rule, to each House of the Congress and to the Comptroller General of the United States. Rules of particular applicability are exempt, however, from the CRA. 5 U.S.C. 804(3). Inasmuch as this action affects only one facility, it would be a rule of particular applicability which is exempt from the requirements of the CRA and the EPA is not required to submit a rule report regarding today's action under section 801.

X. Children's Health Protection

Under Executive Order (''EO'') 13045, for all ''significant'' regulatory actions as defined by EO 12866, EPA must provide an evaluation of the environmental health or safety effect of a proposed rule on children and an explanation of why the proposed rule is preferable to other potentially effective and reasonably feasible alternatives considered by EPA. This proposal is not a significant regulatory action and is exempt from EO 13045.

List of Subjects in 40 CFR Part 261

Environmental protection, Hazardous waste, Recycling, Reporting and recordkeeping requirements.

Authority: Sec. 3001(f) RCRA, 42 U.S.C. 6921(f).

Dated: March 25, 1998.

Norman R. Niedergang,

Director, Waste, Pesticides and Toxics Division.

For the reasons set out in the preamble, 40 CFR Part 261 is proposed to be amended as follows:

PART 261—IDENTIFICATION AND LISTING OF HAZARDOUS WASTE

1. The authority citation for Part 261 continues to read as follows:

Authority: 42 U.S.C. 6905, 6912(a), 6921, 6922, and 6938.

2. In Table 1 of Appendix IX of Part 261 it is proposed to add the following waste stream in alphabetical order by facility to read as follows:

Appendix IX to Part 261—Wastes Excluded Under §§ 260.20 and 260.22.

TABLE 1.—WASTES EXCLUDED FROM NON-SPECIFIC SOURCES

Facility	Address	Waste description
*	*	*
American Steel Cord Corporation ...	Scottsburg, Indiana	Dewatered wastewater treatment plant (WWTP) filtercake (EPA Hazardous Waste No. F006) generated from electroplating operations at a maximum annual rate of 950 cubic yards per year, after (insert publication date of the final rule).

TABLE 1.—WASTES EXCLUDED FROM NON-SPECIFIC SOURCES—Continued

Facility	Address	Waste description
		1. *Verification Testing:* American Steel Cord must implement an annual testing program to demonstrate that the constituent concentrations measured in the TCLP extract of the waste do not exceed the following levels (mg/1). Arsenic—5; Barium—200; Cadmium—.5; Chromium—10; Copper—130; Lead—1.5; Mercury—.2; Nickel—10; Selenium—5; Silver—20; Zinc—1,000; Cyanide—20; Acetone—400; Benzo butyl phthlate—10; Chloroform—10; 1,4-Dichlorobenzene—7.5; cis–1,2–Dichloroethene—7; Methylene chloride—.5; Naphthalene—100; Styrene—10; Tetrachloroethene—.5; Toluene—100; Xylene—1,000. 2. *Changes in Operating Conditions:* If American Steel Cord changes the manufacturing or treatment process or the chemicals used in the manufacturing or treatment process, American Steel Cord may handle the WWTP filtercake sludge generated from the new process under this exclusion after the facility has demonstrated that the waste meets the levels set forth in paragraph 1 and that no new hazardous constituents listed in Appendix VIII of Part 261 have been introduced. 3. *Data Submittals:* The data obtained through annual verification testing or paragraph 2 must be submitted to U.S. EPA Region 5, 77 W. Jackson Blvd., Chicago, IL 60604, within 60 days of sampling. Records of operating conditions and analytical data must be compiled, summarized, and maintained on site for a minimum of five years and must be made available for inspection. All data must be accompanied by a signed copy of the certification statement in 260.22(I)(12).
*	*	* * * * *

[FR Doc. 98–10005 Filed 4–14–98; 8:45 am]
BILLING CODE 6560–50–P

Notices

Federal Register

Vol. 63, No. 72

Wednesday, April 15, 1998

This section of the FEDERAL REGISTER contains documents other than rules or proposed rules that are applicable to the public. Notices of hearings and investigations, committee meetings, agency decisions and rulings, delegations of authority, filing of petitions and applications and agency statements of organization and functions are examples of documents appearing in this section.

DEPARTMENT OF AGRICULTURE

Grain Inspection, Packers and Stockyards Administration

Proposed Posting of Stockyards

The Grain Inspection, Packers and Stockyards Administration, United States Department of Agriculture, has information that the livestock markets named below are stockyards as defined in Section 302 of the Packers and Stockyards Act (7 U.S.C. 202), and should be made subject to the provisions of the Packers and Stockyards Act, 1921, as amended (7 U.S.C. 181 *et seq.*).

MO–281 St. James Horse Sales Company, St. James, Missouri
NJ–108 Camelot Auction Company, Cranbury, New Jersey
NC–173 Burgin Auction & Real Estate, Marion, North Carolina
SC–156 Greer Horse & Pony Auction, Greer, South Carolina

Pursuant to the authority under Section 302 of the Packers and Stockyards Act, notice is hereby given that it is proposed to designate the stockyards named above as posted stockyards subject to the provisions of said Act.

Any person who wishes to submit written data, views or arguments concerning the proposed designation may do so by filing them with the Director, Livestock Marketing Division, Grain Inspection, Packers and Stockyards Administration, Room 3408-South Building, U. S. Department of Agriculture, Washington, DC 20250, by April 30, 1998.

All written submissions made pursuant to this notice will be made available for public inspection in the office of the Director of the Livestock Marketing Division during normal business hours.

Done at Washington, DC, this 7th day of April 1998.

Daniel L. Van Ackeren,

Director, Livestock Marketing Division, Packers and Stockyards Programs.

[FR Doc. 98–9975 Filed 4–14–98; 8:45 am]

BILLING CODE 3410–EN–P

DEPARTMENT OF AGRICULTURE

Rural Utilities Service

Dissemination of Information

AGENCY: Rural Utilities Service, USDA.

ACTION: Request for public comment.

SUMMARY: The Rural Utilities Service (RUS) seeks comments on agency policies for releasing and publishing information about electric and telecommunications borrowers. RUS makes and guarantees loans to electric and telecommunications systems serving rural areas. These loans are generally repaid over a period of 35 years and are secured by the borrower's assets. RUS has a responsibility to protect the security of multimillion dollar loans, to monitor compliance with debt covenants, and to ensure that loan funds are used for purposes authorized by law. As part of this oversight, RUS requires that borrowers submit certain information to RUS periodically. Currently a great deal of this information is easily available to the public.

Both the electric and the telecommunications industries are moving from a regulated utility model to a more competitive model. In a regulated utility model, information about market participants is available to the public. In contrast, under a competitive model, a great deal of information is competitively sensitive. Release of this information could cause competitive harm to individual respondents and to the overall working of the market.

RUS is seeking comments on whether the current policy of providing information to the public should be changed to reflect this new industry environment, and whether certain information should, in the future, be released only in an aggregated form that does not associate data with specific borrowers.

DATES: Written comments must be received by RUS or bear a postmark or equivalent not later than May 15, 1998.

ADDRESSES: Send comments to Sue Arnold, Office of the Assistant Administrator, Electric Program, Rural Utilities Service, United States Department of Agriculture, 1400 Independence Avenue, SW, Stop 1560, Room 4024–S, Washington, DC. 20250–1560. RUS requires, in hard copy, a signed original and 3 copies of all comments. Comments will be available for public inspection during normal business hours.

FOR FURTHER INFORMATION CONTACT: Sue Arnold, Office of the Assistant Administrator, Electric Program, Rural Utilities Service, United States Department of Agriculture, 1400 Independence Avenue, SW, Stop 1560, Room 4024–S, Washington, DC. 20250–1560. Phone: 202–690–1078. Fax: 202–690–0717. E-mail: sarnold@rus.usda.gov.

SUPPLEMENTARY INFORMATION: The Rural Utilities Service (RUS) makes and guarantees loans to electric and telecommunications systems serving rural areas pursuant to the Rural Electrification Act of 1936, as amended, (7 U.S.C. 901 *et seq.*) (RE Act). Most loans are repaid over a period of 35 years and are secured by the borrower's assets. As a creditor, RUS has a fiduciary responsibility to protect the security of multimillion dollar loans, to monitor compliance with debt covenants, and to ensure that loan funds are used for purposes authorized by law. As part of this oversight, RUS requires that borrowers submit certain information to RUS. This information includes Financial and Statistical Reports. Electric distribution borrowers submit this information in RUS Form 7. Power supply borrowers, also known as ''generation and transmission borrowers'' or ''G&T's,'' submit RUS Form 12. Telecommunications borrowers report this information on RUS Form 479.

The environment of both the electric and telecommunications industries is in a state of flux. Until very recently, most Americans received virtually all electricity and most telecommunications services from utilities that are regulated monopolies. Both industries are rapidly moving away from the regulated monopoly

model toward a more competitive model that relies heavily on market forces.

The electric industry is now characterized by a mix of utilities and nonutilities, and the distinction between activities performed by utilities and activities performed by nonutilities is becoming increasingly blurred. Both utilities and nonutilities, for example, generate electric power, and nonutility power marketers, brokers, aggregators, and similar entities now compete directly in business activities that were once the exclusive domain of utilities. In fact, electric power may pass through multiple utility and nonutility entities before reaching ultimate consumers.

The telecommunications industry is in the midst of the deregulation brought about by the Telecommunications Act of 1996 (1996 Act). The service now being deregulated is local telephone service—long distance service was deregulated in the early 1980's. Prior to the 1996 Act, most customers bought local service from a provider that was a utility with an exclusive franchise to serve an area. Today the Federal Communications Commission is implementing the 1996 Act by opening local markets to competition. The distinction between providers of long distance and local telephone services is evaporating, and cable TV companies, internet providers, and others are beginning to explore entering markets that were once the exclusive domain of a traditional telephone company.

In a regulated monopoly model, a great deal of information about utilities is traditionally available to the public. In a competitive environment, in contrast, a great deal of information about market participants could be competitively sensitive. Release of this information could cause substantial competitive harm and impede the workings of a free market.

RUS borrowers are utilities, and RUS currently releases data about individual borrowers on a routine basis. For example, the Statistical Report, Electric Borrowers (RUS Information Publication 201–1) is RUS's annual compilation of data submitted by electric borrowers on RUS Forms 7 and 12. Information about telecommunications borrowers based on RUS Form 479 is compiled in the Statistical Report, Rural Telecommunications Borrowers (RUS Informational Publication 300–4). These reports may be purchased at nominal cost from the U.S. Government Printing Office (GPO). On the other hand, comparable information about nonutilities that compete, or may wish to compete, against RUS borrowers is not easily available.

Because of the changes in the electric and telecommunications industries, and the current imbalance of information available about different industry participants, RUS is seeking public comments to help determine whether some information now routinely published should, in the future, be treated with more confidentiality.

Specifically, RUS requests comments on the following:

1. Should RUS change its current practice of making borrower specific information available in the annual RUS Statistical Reports, and in responses to specific requests from individuals?

2. How do various members of the public use information about specific borrowers that RUS now makes available on a routine basis?

3. Specifically, what information, if any, should be withheld from publication by RUS, and released only in an aggregated form that does not allow information to be matched with specific borrowers? RUS requests that respondents discuss the exact types of information that they believe could be harmful if released.

4. What information should RUS continue to release and/or publish at the borrower level, and why is release or publication of this information in the public interest?

5. How could release of certain business data relating to borrowers cause harm to RUS borrowers, RUS as a secured creditor, rural consumers, and/or the RUS goal of ensuring that rural consumers continue to have access to high quality, reliable electric and telecommunications service at reasonable cost?

Dated: April 9, 1998.

Christopher A. McLean,

Acting Administrator, Rural Utilities Service.

[FR Doc. 98–10029 Filed 4–14–98; 8:45 am]

BILLING CODE 3410–15–P

DEPARTMENT OF COMMERCE

Foreign-Trade Zones Board

[Docket 19–98]

Foreign-Trade Zone 32—Miami, Florida, Application for Subzone Komatsu Latin-America Corporation (Distribution of Construction and Mining Equipment Parts) Miami, FL

An application has been submitted to the Foreign-Trade Zones Board (the Board) by the Greater Miami Foreign-Trade Zone, Inc., grantee of FTZ 32, requesting special-purpose subzone status for the construction and mining equipment parts distribution facility of Komatsu Latin-America Corporation, located in Miami, Florida. The application was submitted pursuant to the provisions of the Foreign-Trade Zones Act, as amended (19 U.S.C. 81a-81u), and the regulations of the Board (15 CFR part 400). It was formally filed on April 6, 1998.

The Komatsu facility (204,382 sq. ft. on 4.72 acres)is located at 7600 N.W. 50th Street, Miami, Florida. The facility (61 employees)is used for storage, inspection, packaging and distribution of a wide variety of parts and components for construction and mining equipment, such as engine parts, equipment, vehicle parts, electrical/electronic components and instruments. The products are distributed throughout the U.S. and Latin America. About half of the parts are sourced from abroad and over 90 percent are exported. Plant activity also includes the occasional packaging or assembly of parts into subassemblies, but no authority is being sought for activity conducted under FTZ procedures that would result in a change in tariff classification.

Zone procedures would exempt Komatsu from Customs duty payments on foreign parts that are reexported. On its domestic sales, the company would be able to defer duty payments until merchandise is shipped from the plant. The application indicates that the savings from zone procedures would help improve the plant's international competitiveness.

In accordance with the Board's regulations, a member of the FTZ staff has been appointed examiner to investigate the application and report to the Board.

Public comment is invited from interested parties. Submissions (original and 3 copies) shall be addressed to the Board's Executive Secretary at the address below. The closing period for their receipt is June 15, 1998.

Rebuttal comments in response to material submitted during the foregoing period may be submitted during the subsequent 15-day period (to June 29, 1998).

A copy of the application and accompanying exhibits will be available for public inspection at each of the following locations:

U.S. Department of Commerce Export Assistance Center, P.O. Box 590570, Miami, Florida 33159

Office of the Executive Secretary, Foreign-Trade Zones Board, Room 3716, U.S. Department of Commerce, 14th & Pennsylvania Avenue, N.W., Washington, D.C. 20230

Dated: April 7, 1998.

Dennis Puccinelli,

Acting Executive Secretary.

[FR Doc. 98–9873 Filed 4–14–98; 8:45 am]

BILLING CODE 3510–DS–P

DEPARTMENT OF COMMERCE

Foreign-Trade Zones Board

[Docket 8–98]

Foreign-Trade Zone 151—Findlay, Ohio, Application for Expansion, Amendment of Application

Notice is hereby given that the application of the Findlay/Hancock County Chamber of Commerce, grantee of FTZ 151, requesting authority to expand its zone in Findlay, Ohio, (Doc. 8–98, 63 F.R. 10588, 3/4/98), has been amended to include an additional site (48 acres), contiguous to Proposed Site 2 (the Ball Metal facility). A large public warehouse facility (400,000 sq. ft.) will be constructed on the property.

As amended, Proposed Site 2 would cover 2 parcels (101 acres). The application otherwise remains unchanged.

The application was initially filed by the Community Development Foundation, which was grantee of FTZ 151 at the time of submission in December 1997. The grant of authority was reissued on April 1, 1998 (Board Order 970) to the Findlay/Hancock County Chamber of Commerce, which has also become the applicant in this case.

The comment period is extended until June 16, 1998. Submissions (original and 3 copies) shall be addressed to the Board's Executive Secretary at the address below.

A copy of the application and the amendment and accompanying exhibits are available for public inspection at the following locations:

Office of the Findlay/Hancock County Chamber of Commerce, Room No. 1, 123 E. Main Cross Street, Findlay, Ohio 45840

Office of the Executive Secretary, Foreign-Trade Zones Board, Room 3716, U.S. Department of Commerce, 14th & Pennsylvania Avenue, NW, Washington, DC 20230

Dated: April 7, 1998.

Dennis Puccinelli,

Acting Executive Secretary.

[FR Doc. 98–9872 Filed 4–14–98; 8:45 am]

BILLING CODE 3510–DS–P

DEPARTMENT OF COMMERCE

International Trade Administration

[A–201–805]

1995/1996 Antidumping Duty Administrative Review of Circular Welded Non-Alloy Steel Pipe From Mexico

AGENCY: Import Administration, International Trade Administration, Department of Commerce.

ACTION: Notice of extension of time limit.

SUMMARY: The Department of Commerce is extending the time limit of the final results of the antidumping duty administrative review of circular welded non-alloy steel pipe from Mexico. This review covers the period November 1, 1995 through October 31, 1996.

EFFECTIVE DATE: April 15, 1998.

FOR FURTHER INFORMATION CONTACT: Ilissa Kabak or John Kugelman, AD/CVD Enforcement, Group III, Office 8, Import Administration, International Trade Administration, US Department of Commerce, 14th Street and Constitution Avenue, NW, Washington, DC 20230; telephone (202) 482–0145 or 482–0649, respectively.

SUPPLEMENTARY INFORMATION: Due to the complexity of issues present in this case, it is not practicable to complete this administrative review within the original time limit. Therefore, the Department of Commerce is extending the time limit for completion of this administrative review until June 8, 1998, in accordance with section 751(a)(3)(A) of the Trade and Tariff Act of 1930, as amended by the Uruguay Round Agreements Act of 1994.

This extension is in accordance with section 751(a)(3)(A) of the Tariff Act of 1930, as amended (19 U.S.C. 1675(a)(3)(A)).

Dated: April 7, 1998.

Richard O. Weible,

Acting Deputy Assistant Secretary, AD/CVD Enforcement Group III.

[FR Doc. 98–9871 Filed 4–14–98; 8:45 am]

BILLING CODE 3510–DS–P

DEPARTMENT OF COMMERCE

International Trade Administration

[A–475–818]

Anti-circumvention Inquiry of the Antidumping Duty Order on Certain Pasta From Italy: Affirmative Preliminary Determination of Circumvention of the Antidumping Duty Order

AGENCY: Import Administration, International Trade Administration, Department of Commerce.

ACTION: Notice of Affirmative Preliminary Determination of Circumvention of Antidumping Duty Order.

SUMMARY: On October 23, 1997, the Department of Commerce received an allegation of circumvention of the antidumping duty order on certain pasta from Italy. Pursuant to that allegation, the Department of Commerce initiated an anti-circumvention inquiry on December 8, 1997.

We preliminarily determine that certain pasta produced in Italy by Barilla S.r.L. (Barilla) and exported to the United States in packages of greater than five pounds, which subsequently are repackaged in the United States into packages of five pounds or less, constitute circumvention of the antidumping duty order on certain pasta from Italy, within the meaning of section 781(a) of the Tariff Act of 1930, as amended, and 19 CFR 351.225(g). Interested parties are invited to comment on this preliminary determination.

EFFECTIVE DATE: April 15, 1998.

FOR FURTHER INFORMATION CONTACT: Edward Easton or John Brinkmann, Import Administration, International Trade Administration, U.S. Department of Commerce, 14th Street and Constitution Avenue, NW, Washington, DC 20230; telephone: (202) 482–1777 or (202) 482–5288, respectively.

SUPPLEMENTARY INFORMATION:

Applicable Statute and Regulations

Unless otherwise indicated, all citations to the statute are references to the provisions effective January 1, 1995, the effective date of the amendments made to the Tariff Act of 1930 (the Act) by the Uruguay Round Agreements Act. In addition, unless otherwise indicated, all citations to the regulations of the Department of Commerce (the Department) are to the regulations as codified at 19 CFR part 351, 62 FR 27295 (May 19, 1997).

Background

Since the initiation of this anti-circumvention inquiry on December 8, 1997 (*see Initiation of Anti-Circumvention Inquiry on Antidumping Duty Order on Certain Pasta from Italy*, 62 FR 65673 (December 15, 1997) (*Notice of Initiation*), the following events have occurred:

On January 2, 1998, the Department issued a questionnaire to Barilla. On the day that Barilla's response was due (February 9, 1998), Barilla informed the Department that it would not respond to our questionnaire.

On January 16, 1998, Barilla proposed a certification scheme which it states would enable the Department to exclude bulk pasta that is not to be repackaged after importation, *e.g.*, bulk pasta shipped directly to institutional or food service users. Specifically, each of Barilla's independent distributors would certify that it would (1) resell all pasta purchased from Barilla in the packaging in which the pasta was delivered to it, and (2) would not repack any pasta in packages greater than five pounds (hereafter referred to as bulk pasta) into packages of five pounds or less. At the Department's request, the U.S. Customs Service (Customs) transmitted to the Department its initial comments on Barilla's proposed certification program on February 23, 1998 (*see* Memorandum to the File dated March 31, 1998).

On February 13, 1998, the petitioners filed a response to Barilla's January 16 and February 9 letters. The petitioners argued that, given Barilla's failure to respond to the Department's questionnaire, the Department should immediately issue an affirmative circumvention ruling and suspend liquidation on entries of bulk pasta by Barilla. The petitioners also stated that they did not oppose Barilla's proposed certification scheme, but have urged the Department to adopt any such certification scheme for *all* importers of bulk pasta. Barilla submitted rebuttal comments on February 20, 1998.

Scope of Antidumping Duty Order

The merchandise currently subject to the antidumping order is certain non-egg dry pasta in packages of five pounds (2.27 kilograms) or less, whether or not enriched or fortified or containing milk or other optional ingredients such as chopped vegetables, vegetable purees, milk, gluten, diastases, vitamins, coloring and flavorings, and up to two percent egg white. The pasta covered by this scope is typically sold in the retail market, in fiberboard or cardboard cartons or polyethylene or polypropylene bags, of varying dimensions.

Excluded from the scope of the order are refrigerated, frozen, or canned pastas, as well as all forms of egg pasta, with the exception of non-egg dry pasta containing up to two percent egg white. Also excluded are imports of organic pasta from Italy that are accompanied by the appropriate certificate issued by the Instituto Mediterraneo Di Certificazione (IMC), by Bioagricoop Scrl, or by QC&I International Services. Furthermore, multicolored pasta imported in kitchen display bottles of decorative glass, which are sealed with cork or paraffin and bound with raffia, is excluded from the scope of this order.

The merchandise under order is currently classifiable under item 1902.19.20 of the *Harmonized Tariff Schedule of the United States* (HTSUS). Although the HTSUS subheading is provided for convenience and customs purposes, the written description of the merchandise under order is dispositive.

Scope of the Anti-Circumvention Inquiry

The product subject to this anti-circumvention inquiry is certain pasta produced in Italy by Barilla and exported to the United States in packages of greater than five pounds (2.27 kilograms) that meets all the requirements for the merchandise subject to the antidumping duty order, with the exception of packaging size, and which is repackaged into packages of five pounds (2.27 kilograms) or less after entry into the United States.

Nature of the Anti-Circumvention Inquiry

Section 781(a)(1) of the Act provides that the Department, after taking into account any advice provided by the United States International Trade Commission (ITC) under section 781(e) of the Act, may include the imported merchandise under review within the scope of an order if the following criteria have been met: (A) The merchandise sold in the United States is of the same class or kind as any other merchandise that is the subject to the antidumping duty order; (B) such merchandise sold in the United States is completed or assembled in the United States from parts or components produced in the foreign country with respect to which such order applies; (C) the process of assembly or completion in the United States is minor or insignificant; and (D) the value of the parts or components produced in the foreign country to which the antidumping duty order applies is a significant portion of the total value of the merchandise sold in the United States.

Section 781(a)(3) of the Act further provides that, in determining whether to include parts or components in the order, the Department shall consider: (1) The pattern of trade, including sourcing patterns; (2) whether the manufacturer or exporter of the parts or components is affiliated with the person who assembles or completes the merchandise sold in the United States; and (3) whether imports into the United States of the parts or components produced in such foreign country have increased after the initiation of the investigation which resulted in the issuance of such order or finding.

The Department's questionnaire, transmitted to Barilla on January 2, 1998, was designed to elicit information for purposes of conducting both qualitative and quantitative analyses in accordance with the criteria enumerated at section 781(a) of the Act. This approach is consistent with our analysis in previous anti-circumvention inquiries. *See, e.g., Certain Carbon Steel Butt-Weld Pipe Fittings from the People's Republic of China; Affirmative Final Determination of Circumvention of Antidumping Duty Order*, 59 FR 15155 (March 31, 1994). For the Department to ascertain the value of the completed merchandise sold in the United States, we requested that Barilla provide cost data relevant to the production of pasta produced in Italy that is repackaged and sold in the United States as well as the costs associated with for the processing and repackaging operations performed in the United States. Barilla, however, refused to provide any of the information requested in the Department's questionnaire.

Affirmative Preliminary Determination of Circumvention

For the reasons described below, we preliminarily determine that circumvention of the antidumping duty order on certain pasta from Italy is occurring by reason of exports of bulk pasta from Italy produced by Barilla which subsequently are repackaged in the United States into packages of five pounds or less for sale in the United States.

Facts Available

Section 776(a) of the Act requires the Department to resort to facts otherwise available if necessary information is not available on the record or when an interested party or any other person fails to provide (requested) information by the deadlines for submission of the information or in the form and manner

requested, subject to subsections (c)(1) and (e) of section 782. As provided in section 782(c)(1) of the Act, if an interested party, promptly after receiving a request from [the Department] for information, notifies [the Department] that such party is unable to submit the information requested in the requested form and manner, the Department may modify the requirements to avoid imposing an unreasonable burden on that party. Since Barilla did not provide any such notification to the Department, subsection (c)(1) does not apply to this situation. Furthermore, since Barilla failed to respond to the Department's questionnaire, we must base the preliminary determination in this inquiry on the facts otherwise available.

Section 776(b) of the Act permits the Department to use an inference that is adverse to the interests of an interested party if that party has failed to cooperate by not acting to the best of its ability to comply with a request for information. Because Barilla refused to comply with the Department's request for information, we find that Barilla failed to cooperate by not acting to the best of its ability to comply with the Department's request. Barilla's refusal to respond to our questionnaire impedes our ability not only to determine if circumvention of the antidumping duty order is occurring, but also to distinguish between its bulk imports for repackaging and any bulk imports which may have been exempt from the scope of the antidumping duty order. Therefore, the adverse inference we are relying upon in accordance with section 776(b) of the Act is that Barilla has been exporting pasta in bulk packages to the United States, where it has been repackaged into what would have been subject merchandise had it been imported directly. The Statement of Administrative Action (SAA), which accompanied the Uruguay Round Agreements Act, H.R. Doc. No. 316, 103rd Congress, 2nd Session (1994) (URAA), states that information used to make an adverse inference may include such sources as the petition, other information placed on the record, or determinations in a prior proceeding regarding the subject merchandise. SAA at 870. We reviewed all information on the record including the petitioners' October 23, 1997 application for this anti-circumvention inquiry (*see* Memorandum from Gary Taverman to Richard W. Moreland, dated December 8, 1997). We have concluded that the application alleged each of the elements required by 781(a) of the Act and was accompanied by supporting data, and continues to be of probative value.

Barilla's Certification Proposal

The scope of the antidumping duty order on pasta excluded pasta in packages of greater than five pounds. Our affirmative preliminary determination in this proceeding is that circumvention of the order is occurring by reason of imports of bulk pasta produced in Italy by Barilla which are subsequently repackaged in the United States into packages of five pounds or less for sale in the United States. This anti-circumvention inquiry, initiated pursuant to section 781(a) of the Act with respect to merchandise completed or assembled in the United States, is not intended to examine bulk pasta produced by Barilla, imported into the United States, and resold in bulk quantities within the United States because imports of bulk pasta into the United States for resale as bulk pasta would not constitute circumvention of the antidumping duty order.

As discussed in the Background section above, Barilla requested that the Department implement a certification scheme whereby each of its independent distributors would certify that it would resell all pasta purchased from Barilla in the packaging in which the pasta was delivered to it, and would not repack any pasta from packages greater than five pounds into packages of five pounds or less. According to Barilla, this scheme would enable the Department to exclude bulk pasta that was not destined for repackaging after importation, *e.g.*, bulk pasta shipped directly to institutional or food service users, from the scope of the antidumping duty order.

For our final circumvention determination, we will allow Barilla an additional opportunity to provide the Department with information necessary to distinguish its exports of bulk pasta for repackaging in the United States from those imported for sale as bulk pasta. If Barilla provides sufficient relevant information, we will consider the certification scheme it proposed. In doing so, we will consult with the U.S. Customs Service to determine the effectiveness of this scheme and of alternative proposals.

Suspension of Liquidation

In accordance with section 773(d) of the Act, the Department is directing the Customs Service to suspend liquidation of all entries of bulk pasta from Italy produced by Barilla that were entered, or withdrawn from warehouse, for consumption on or after December 8, 1997, the date of initiation of this anti-circumvention inquiry.

The merchandise subject to suspension of liquidation is pasta in packages of greater than five pounds as defined in the ''Scope of the Anti-circumvention Inquiry'' section of this notice. The U.S. Customs Service shall require a cash deposit in the amount of 11.26 percent for all such unliquidated entries.

This suspension of liquidation will remain in effect until further notice.

Notification of the International Trade Commission

The Department, consistent with section 781(e) of the Act, will notify the ITC of this preliminary determination to include the merchandise subject to this inquiry within the antidumping duty order on certain pasta from Italy. Pursuant to section 781(e) of the Act, the ITC may request consultations concerning the Department's proposed inclusion of the subject merchandise. If, after consultations, the ITC believes that a significant injury issue is presented by the proposed inclusion, the ITC may provide written advice to the Department. In such a case, the ITC will have 60 days to provide written advice to the Department.

Public Comment

Interested parties may request disclosure within five days of the date of publication of this determination, and may request a hearing within 10 days of publication. Case briefs and/or written comments from interested parties may be submitted no later than 20 days from the publication of this notice. Rebuttal briefs and rebuttals to comments, limited to issues raised in those briefs or comments, may be filed no later than 27 days after publication of this notice. Any hearing, if requested, will be held no later than 34 days after publication of this notice. The Department will publish the final determination with respect to this anti-circumvention inquiry, including the results of its analysis of any written comments.

This affirmative preliminary circumvention determination is in accordance with section 781(a) of the Act and 19 CFR 351.225 of the Department's regulations.

Dated: April 7, 1998.

Robert S. LaRussa,

Assistant Secretary for Import Administration.

[FR Doc. 98–9869 Filed 3–14–98; 8:45 am]

BILLING CODE 3510–DS–P

DEPARTMENT OF COMMERCE

International Trade Administration

Opportunity to Apply for Membership on the U.S.-Korea Committee on Business Cooperation

AGENCY: International Trade Administration, Commerce.

ACTION: Notice of Opportunity to Apply for Membership on the U.S.-Korea Committee on Business Cooperation.

SUMMARY: The Department of Commerce is currently seeking applications for membership on the U.S. side of the U.S.-Korea Committee on Business Cooperation (CBC). The purpose of the CBC is to facilitate stronger commercial ties between U.S. and Korean private sector businesses. The CBC is chaired by the U.S. Secretary of Commerce and the Korean Minister of Commerce, Industry and Energy. Its activities are coordinated by an equal number of private sector representatives from the United States and Korea. The work of the CBC is currently focused through eight sector-specific subgroups: (1) Government procurement, (2) environmental technologies, (3) venture capital, (4) automobiles, (5) filmed entertainment, (6) electronic commerce, (7) a business opportunity network on the Internet, and (8) telecommunications. Additional subgroups can be formed if members desire.

FURTHER INFORMATION CONTACT: Private sector representatives will be members until the CBC goes out of existence on October 1, 1999. If the CBC is extended by mutual consent of the U.S. Department of Commerce and the Korean Ministry of Commerce, Industry and Energy, a new recruitment process for CBC members will be initiated. Applications are now being sought for private sector members to serve beginning immediately. Private sector members will serve at the discretion of the Secretary. They are expected to participate fully in defining and implementing in CBC work programs. It is expected that private sector individuals chosen for the CBC will attend at least 75% of CBC meetings which will be held in the U.S. and Korea. The next full CBC meeting is expected to be held in Korea in the fall of 1998.

Private sector members are fully responsible for travel, living and personal expenses associated with their participation in the CBC. The private sector members will serve in a representative capacity presenting the views and interests of the particular business sector in which they operate; private sector members are not special government employees.

The goals of the CBC are as follows:

- Identifying commercial opportunities, impediments, and issues of concern to the respective business communities;
- Improving the dissemination of appropriate commercial information on both markets;
- Adopting sectoral or project-oriented approaches to expand business opportunities, addressing specific problems, and making recommendations to decision-makers where appropriate;
- Promoting trade/business development and promotion programs to assist the respective business communities in accessing each market, including trade missions, exhibits, seminars, and other events;
- Facilitating appropriate technical cooperation; and
- Considering other steps that may be taken to foster growth and enhance commercial relations.

Selection: This notice is seeking applications for private sector members.

Eligibility criteria. Applicants must be:

- A U.S. citizen residing in the United States; and
- Not a registered foreign agent under the Foreign Agents Registration Act of 1938 (FARA).

In reviewing eligible applicants, the Commerce Department will consider:

- Expertise in one of the business sectors noted above in which the CBC will be active;
- Readiness to initiate and be responsible for activities in one or more of the business sectors in which the CBC will be active; and
- Prospective member contributes to membership diversity of company size, type, location, demographics and/or traditional under-representation in business.

To be considered for membership, please provide the following: name and title of the individual requesting consideration; name and address of the company or organization sponsoring each individual; company's product or service line; size of the company; export experience and major markets; a brief statement of why each candidate should be considered for membership on the CBC; the particular segment of the business community each candidate would represent; a personal resume; and a statement that the applicant is a U.S. citizen and not a registered foreign agent under FARA.

DEADLINE: In order to receive full consideration, requests must be received no later than: June 1, 1998.

ADDRESSES: Please send your requests for consideration to Susan M. Blackman, Director, Office of Korea and Southeast Asia, U.S. Department of Commerce, Room 3203, 14th St. and Constitution Ave., NW, Washington, DC 20230, fax (202) 482–4760.

FOR FURTHER INFORMATION CONTACT: Susan M. Blackman, Director, Office of Korea and Southeast Asia, U.S. Department of Commerce, Room 3203, 14th St. and Constitution Ave., NW, Washington, DC 20230, telephone (202) 482–1695, fax (202) 482–4760.

Authority: 15 U.S.C. 1512.

Dated: April 9, 1998.

Peter B. Hale,

Acting Deputy Assistant Secretary for Asia and the Pacific.

[FR Doc. 98–9908 Filed 4–14–98; 8:45 am]

BILLING CODE 3510–DA–M

DEPARTMENT OF COMMERCE

International Trade Administration

[C–412–811]

Certain Hot-Rolled Lead and Bismuth Carbon Steel Products From the United Kingdom; Final Results of Countervailing Duty Administrative Review

AGENCY: Import Administration, International Trade Administration, Department of Commerce.

ACTION: Notice of final results of countervailing duty administrative review.

SUMMARY: On December 8, 1997, the Department of Commerce published in the **Federal Register** its preliminary results of administrative review of the countervailing duty order on certain hot-rolled lead and bismuth carbon steel products from the United Kingdom for the period January 1, 1996 through December 31, 1996. The Department has now completed this administrative review in accordance with section 751(a) of the Tariff Act of 1930, as amended. For information on the net subsidy for each reviewed company, and for all non-reviewed companies, please see the *Final Results of Review* section of this notice. We will instruct the Customs Service to assess countervailing duties as detailed in the *Final Results of Review* section of this notice.

EFFECTIVE DATE: April 15, 1998.

FOR FURTHER INFORMATION CONTACT: Christopher Cassel or Richard Herring,

Office of CVD/AD Enforcement VI, Import Administration, International Trade Administration, U.S. Department of Commerce, 14th Street and Constitution Avenue, NW., Washington, DC 20230; telephone: (202) 482–2786.

SUPPLEMENTARY INFORMATION:

Background

Pursuant to 19 CFR 355.22(a), this review covers only those producers or exporters of the subject merchandise for which a review was specifically requested. Accordingly, this review covers British Steel Engineering Steels Holdings, British Steel Engineering Steels Limited, and British Steel plc. This review also covers the period January 1, 1996 through December 31, 1996 and 16 programs.

Since the publication of the preliminary results on December 8, 1997 (62 FR 64568) (*Lead Bar 96 Preliminary Results*), the following events have occurred. We invited interested parties to comment on the preliminary results. On January 7, 1998 case briefs were submitted by British Steel Engineering Steels Limited (BSES), which exported to the United States during the review period (the respondent), and Inland Steel Bar Co. (petitioner). On January 12, 1998 and January 14, 1998 rebuttal briefs were submitted by BSES and Inland Steel Bar Co., respectively.

Applicable Statute

Unless otherwise indicated, all citations to the statute are references to the provisions of the Tariff Act of 1930, as amended by the Uruguay Round Agreements Act (URAA) effective January 1, 1995 (the Act). In addition, unless otherwise indicated, all citations to the Department's regulations are to the regulations codified at 19 CFR Part 355 (1997). The Department is conducting this administrative review in accordance with section 751(a) of the Act.

Scope of the Review

Imports covered by this review are hot-rolled bars and rods of non-alloy or other alloy steel, whether or not descaled, containing by weight 0.03 percent or more of lead or 0.05 percent or more of bismuth, in coils or cut lengths, and in numerous shapes and sizes. Excluded from the scope of this review are other alloy steels (as defined by the *Harmonized Tariff Schedule of the United States* (HTSUS) Chapter 72, note 1 (f)), except steels classified as other alloy steels by reason of containing by weight 0.4 percent or more of lead or 0.1 percent or more of bismuth, tellarium, or selenium. Also excluded are semi-finished steels and flat-rolled products. Most of the products covered in this review are provided for under subheadings 7213.20.00.00 and 7214.30.00.00 of the HTSUS. Small quantities of these products may also enter the United States under the following HTSUS subheadings: 7213.31.30.00, 60.00; 7213.39.00.30, 00.60, 00.90; 7214.40.00.10, 00.30, 00.50; 7214.50.00.10, 00.30, 00.50; 7214.60.00.10, 00.30, 00.50; and 7228.30.80. Although the HTSUS subheadings are provided for convenience and for Customs purposes, our written description of the scope of this proceeding is dispositive.

Change in Ownership

(I) Background

On March 21, 1995, British Steel plc (BS plc) acquired all of Guest, Keen & Nettlefolds' (GKN) shares in United Engineering Steels (UES), the company which produced and exported the subject merchandise to the United States during the original investigation. Thus, UES became a wholly-owned subsidiary of BS plc and was renamed British Steel Engineering Steels (BSES).

Prior to this change in ownership, UES was a joint venture company formed in 1986 by British Steel Corporation (BSC), a government-owned company, and GKN, a privately-owned company. In return for shares in UES, BSC contributed a major portion of its Special Steels Business, the productive unit which produced the subject merchandise. GKN contributed its Brymbo Steel Works and its forging business to the joint venture. BSC was privatized in 1988 and now bears the name BS plc.

In the investigation of this case, the Department found that BSC had received a number of nonrecurring subsidies prior to the 1986 transfer of its Special Steels Business to UES. *See Final Affirmative Countervailing Duty Determination: Certain Hot-Rolled Lead and Bismuth Carbon Steel Products From the United Kingdom*, 58 FR 6237, 6243 (January 27, 1993) (*Lead Bar*). Further, the Department determined that the sale to UES did not alter these previously bestowed subsidies, and thus the portion of BSC's pre-1986 subsidies attributable to its Special Steels Business transferred to UES. *Lead Bar* at 6240.

In the 1993 certain steel products investigations, the Department modified the allocation methodology developed for *Lead Bar*. Specifically, the Department stated that it would no longer assume that all subsidies allocated to a productive unit follow it when it is sold. Rather, when a productive unit is spun-off or acquired, a portion of the sales price of the productive unit represents the reallocation of prior subsidies. *See* the General Issues Appendix (*GIA*), appended to the *Final Countervailing Duty Determination; Certain Steel Products From Austria*, 58 FR 37217, 37269 (July 9, 1993) (*Certain Steel*). In a subsequent Remand Determination, the Department aligned *Lead Bar* with the methodology set forth in the ''Privatization'' and ''Restructuring'' sections of the *GIA*. *Certain Hot-Rolled Lead and Bismuth Carbon Steel Products from the United Kingdom: Remand Determination* (October 12, 1993) (*Remand*).

(II) Analysis of BS plc's Acquisition of UES

On March 21, 1995, BS plc acquired 100 percent of UES. In determining how this change in ownership affects the attribution of subsidies to the subject merchandise, we relied on Section 771(5)(F) of the Act, which states that a change in ownership does not require a determination that past subsidies received by an enterprise are no longer countervailable, even if the transaction is accomplished at arm's length. The Statement of Administrative Action, H.R. Doc. No. 316, Vol. 1, 103d Cong., 2d Sess. 928 (1994) (SAA), explains that the aim of this provision is to prevent the extreme interpretation that the arm's length sale of a firm automatically, and in all cases, extinguishes any prior subsidies conferred. While the SAA indicates that the Department retains the discretion to determine whether and to what extent a change in ownership eliminates past subsidies, it also indicates that this discretion must be exercised carefully by considering the facts of each case. *Id*.

In accordance with the Act and the SAA, we examined the facts of BS plc's acquisition of GKN's shares of UES, and we determined that the change in ownership does not render previously bestowed subsidies attributable to UES no longer countervailable. However, we also determined that a portion of the purchase price paid for UES is attributable to its prior subsidies. Therefore, we reduced the amount of the subsidies that ''traveled'' with UES to BS plc, taking into account the allocation of subsidies to GKN, the former joint-owner of UES. *See Certain Hot-Rolled Lead and Bismuth Carbon Steel Products From the United Kingdom; Final Results of Countervailing Duty Administrative Review*, 62 FR 53306 (October 14, 1997) (*Lead Bar 95 Final Results*); *see also* the

discussion in *Certain Hot-Rolled Lead and Bismuth Carbon Steel Products From the United Kingdom; Preliminary Results of Countervailing Duty Administrative Review,* 62 FR 16555 (April 7, 1997) (*Lead Bar 95 Preliminary Results*). To calculate the amount of UES's subsidies that passed through to BS plc as a result of the acquisition, we applied the methodology described in the ''Restructuring'' section of the *GIA. See GIA,* 58 FR at 37268–37269. This determination is in accordance with our changes in ownership finding in *Final Affirmative Countervailing Duty Determination; Pasta From Italy,* 61 FR 30288, 30289-30290 (June 14, 1996), and our finding in the 1994 administrative review of this case, in which we determined that ''[t]he URAA is not inconsistent with and does not overturn the Department's *General Issues Appendix* methodology or its findings in the *Lead Bar Remand Determination.'' Certain Hot-Rolled Lead and Bismuth Carbon Steel Products From the United Kingdom; Final Results of Countervailing Duty Administrative Review,* 61 FR 58377, 58379 (November 14, 1996).

With the acquisition of UES, we also determined that BS plc's remaining subsidies are attributable to the subject merchandise, now produced by BS plc's wholly-owned subsidiary, BSES. Where the Department finds that a company has received untied countervailable subsidies, to determine the countervailing duty rate, the Department attributes those subsidies to that company's total sales of domestically produced merchandise, including the sales of 100-percent-owned domestic subsidiaries. If the subject merchandise is produced by a subsidiary company, and the only subsidies in question are the untied subsidies received by the parent company, the countervailing duty rate calculation for the subject merchandise is the same as described above. Similarly, if such a company purchases another company, as was the case with BS plc's purchase of UES, then the current benefit from the parent company's allocable untied subsidies is attributed to total sales, including the sales of the newly acquired company. *See, e.g., GIA,* 58 FR at 3762 (''the Department often treats the parent entity and its subsidiaries as one when determining who ultimately benefits from a subsidy''). Accordingly, in the *Lead Bar 95 Final Results,* we determined that it was appropriate to collapse BSES with BS plc for purposes of calculating the countervailing duty for the subject merchandise. BSES, as a wholly-owned subsidiary of BS plc, continues to benefit from the remaining benefit stream of BS plc's untied subsidies.

In collapsing UES with BS plc, we also determined that UES's untied subsidies ''rejoined'' BS plc's pool of subsidies with the company's 1995 acquisition. All of these subsidies were untied subsidies originally bestowed upon BSC (BS plc). After the formation of UES in 1986, the subsidies that ''traveled'' with the Special Steels Business were also untied, and were found to benefit UES as a whole. *See Lead Bar 95 Final Results.*

(III) Calculation of Benefit

To calculate the countervailing duty rate for the subject merchandise in 1996, we first determined BS plc's benefits in 1996, taking into account all spin-offs of productive units (including the Special Steel Business) and BSC's full privatization in 1988. *See Final Affirmative Countervailing Duty Determination; Certain Steel Products from the United Kingdom,* 58 FR 37393 (July 9, 1993) (*UK Certain Steel*). We then calculated the amount of UES's subsidies that ''rejoined'' BS plc after the 1995 acquisition, taking into account the reallocation of subsidies to GKN. *See Lead Bar 95 Final Results.* As indicated above, in determining both these amounts, we followed the methodology outlined in the *GIA.* After adding BS plc's and UES's benefits for each program, we then divided that amount by BS plc's total sales of merchandise produced in the United Kingdom in 1996.

Allocation Methodology

In *British Steel plc* v. *United States,* 879 F. Supp. 1254 (CIT 1995) (*British Steel*), the U.S. Court of International Trade ruled against the Department's allocation methodology, which relied on U.S. Internal Revenue Service information on the industry specific average useful life (AUL) of assets for determining the allocation period for non-recurring subsidies. In accordance with the court's remand order, the Department calculated a company-specific allocation period based on the AUL of non-renewable physical assets for BS plc. This allocation period was determined to be 18 years. This remand determination was affirmed by the Court on June 4, 1996. *British Steel plc* v. *United States,* 929 F. Supp. 426, 439 (CIT 1996).

The Department's acquiescence to the CIT's decision in the *Certain Steel* cases resulted in different allocation periods between the *UK Certain Steel* and *Lead Bar* proceedings (18 years vs. 15 years, respectively). Different allocation periods for the same subsidies in two different proceedings involving the same company generate significant inconsistencies. These inconsistencies are even more pronounced because UES became a wholly-owned subsidiary of BS plc in 1995. Therefore, in order to maintain a consistent allocation period across the *UK Certain Steel* and *Lead Bar* proceedings, as well as in the different segments of *Lead Bar,* we altered the allocation methodology previously used to determine the allocation period for non-recurring subsidies previously bestowed on BSC and attributed to UES. In the 1995 review, we applied the company-specific 18-year allocation period to all non-recurring subsidies. *See Lead Bar 95 Final Results.* BSES submitted comments on this issue (*see* Comment 5, below). Based on our decision in the 1995 administrative review of this order, we determine that it is appropriate in this review to continue to allocate all of BSC's non-recurring subsidies over BS plc's company-specific average useful life of renewable physical assets (*i.e.,* 18 years).

Analysis of Programs

Based upon the responses to our questionnaire and written comments from the interested parties we determine the following:

I. Programs Conferring Subsidies

A. Programs Previously Determined to Confer Subsidies

1. *Equity Infusions.* In the preliminary results, we found that this program conferred countervailable subsidies on the subject merchandise. Our review of the record and our analysis of the comments submitted by the interested parties, summarized below, has not led us to change our findings from the preliminary results. Accordingly, the net subsidy for this program, which is 4.69 percent *ad valorem,* remains unchanged from the preliminary results. *Lead Bar 96 Preliminary Results,* 62 FR at 64570.

2. *Regional Development Grant Program.* In the preliminary results, we found that this program conferred countervailable subsidies on the subject merchandise. Our review of the record and our analysis of the comments submitted by the interested parties, summarized below, has not led us to change our findings from the preliminary results. Accordingly, the net subsidy for this program, which is 0.15 percent *ad valorem,* remains unchanged from the preliminary results. *Id.*

3. *National Loan Funds Loan Cancellation.* In the preliminary results, we found that this program conferred countervailable subsidies on the subject merchandise. Our review of the record and our analysis of the comments submitted by the interested parties, summarized below, has not led us to change our findings from the preliminary results. Accordingly, the net subsidy for this program, which is 0.44 percent *ad valorem,* remains unchanged from the preliminary results. *Id.* at 64570–71.

II. Programs Found to be Not Used

In the preliminary results we found that the producers and/or exporters of the subject merchandise did not apply for or receive benefits under the following programs:

A. New Community Instrument Loans
B. ECSC Article 54 Loan Guarantees
C. NLF Loans
D. ECSC Conversion Loans
E. European Regional Development Fund Aid
F. Article 56 Rebates
G. Regional Selective Assistance
H. ECSC Article 56(b)(2) Redeployment Aid
I. Inner Urban Areas Act of 1978
J. LINK Initiative
K. European Coal and Steel Community (ECSC) Article 54 Loans/Interest Rebates

We did not receive any comments on these programs from the interested parties, and our review of the record has not led us to change our findings from the preliminary results.

III. Program Previously Found to be Terminated

Transportation Assistance

The Department found this program to be terminated in the 1995 administrative review of this countervailing duty order. *See Lead Bar 1995 Final Results.*

IV. Other Programs Examined

BRITE/EuRAM and Standards Measurement and Testing Program

BS plc received assistance under these two European Union programs to fund research and development. The European Union claimed that assistance provided under both of these programs is non-countervailable in accordance with Article 8.2(a) of the WTO Agreement on Subsidies and Countervailing Measures and section 771(5B)(B) of the Act (which provide that certain research and development subsidies are not countervailable). We determine that it is not necessary to address whether BRITE/EuRAM and the Standards Measurement and Testing Program qualify for non-countervailable treatment because combined, the assistance provided under both of these programs would result in a rate of less than 0.005 percent *ad valorem,* and thus would have no impact on the overall countervailing duty rate calculated for this POR. For this same reason we have not conducted a specificity analysis of these programs. *See, e.g., Final Affirmative Countervailing Duty Determination: Steel Wire Rod from Germany,* 62 FR 54990, 54995–54996 (October 22, 1997); *Certain Carbon Steel Products from Sweden; Final Results of Countervailing Duty Administrative Review,* 62 FR 16549 (April 7, 1997) and *Certain Carbon Steel Products from Sweden; Preliminary Results of Countervailing Duty Administrative Review,* 61 FR 64062, 64065 (December 3, 1996); *Final Negative Countervailing Duty Determination: Certain Laminated Hardwood Trailer Flooring (''LHF'') From Canada,* 62 FR 5201 (February 4, 1997); *Industrial Phosphoric Acid From Israel; Final Results of Countervailing Duty Administrative Review,* 61 FR 53351 (October 11, 1996) and *Industrial Phosphoric Acid From Israel; Preliminary Results of Countervailing Duty Administrative Review,* 61 FR 28845 (June 6, 1996).

Analysis of Comments

Comment 1: Whether British Steel plc's Reported Total Sales Should Be Adjusted

According to the petitioner, the BS plc sales figure used in the calculations for the preliminary determination appears to include intra-corporate sales. Therefore, the Department should adjust BS plc's reported total sales to exclude intra-corporate sales. Because BS plc did not report a separate total for 1996 intra-corporate sales in this review, the Department should use, as facts available, the sales figure for the fiscal year that ended in March 1997 from BS plc's 1997 Annual Report.

The respondent has certified that the 1996 sales figure that the Department used for the preliminary results does not include intra-corporate sales. The respondent further states that the reported figure was calculated on the same basis as the figure reported for the 1995 administrative review.

Department's Position

In the 1995 proceeding, we verified the basis by which BS plc prepared its total sales, excluding intra-corporate sales. The respondent has certified that the sales figure reported in this proceeding was prepared on the same basis as in the 1995 proceeding. Therefore, in the calculations for the final results of this review, we have not modified the BS plc 1996 sales figure used for the preliminary results.

Comment 2: Allocation of Subsidies to Guest, Keen & Nettleford (GKN)

The petitioner asserts that the Department should not allocate subsidies to GKN as a result of GKN's sale of its shares of UES to BS plc. According to the petitioner, the Department's subsidy repayment methodology is inconsistent with the countervailing duty statue, basic economic principles, and evidence produced in this proceeding. The petitioner asserts that the Department's subsidy credit methodology is invalid, that there is no evidence of repayment, and that BS plc's acquisition of GKN's shares does not differ from sales of shares traded daily on the stock market. Because BSES is the same position as BSC's special steels business in 1985, all of UES's subsidies should travel back to BS plc with the sale of GKN's UES shares to BS plc. Furthermore, the petitioner asserts that the *GIA* and *Certain Pasta from Italy* are distinguishable from the current case. The petitioner submitted the same arguments in the 1995 review of this case. *See 1995 UK Lead Bar Final,* 62 FR at 53309.

The respondent points out that the petitioner did not acknowledge that, in the 1995 review, the Department rejected the petitioner's arguments with respect to the attribution of a portion of UES's subsidies to GKN. Therefore, the respondent asserts that the Department should reject the petitioner's arguments again. The respondent also notes that the petitioner did not discuss the CAFC's recent holding in *British Steel plc* v. *United States,* 1997 U.S. App. LEXIS 29,353, (October 24, 1997) (*British Steel II*) that the Department has the discretion to apply a subsidy credit methodology. Finally, the respondent asserts that if the petitioner is correct and the statute focuses on the production of merchandise and the ownership of production is irrelevant, then the Department must determine that UES is now in the same position as before the March 1995 acquisition, not the same position as in 1985.

Department's Position

Our position with respect to the petitioner's comments was outlined in detail in the 1995 review of this case. *See 1995 UK Lead Bar Final,* 62 FR at 53309–10. The petitioner has not presented any new arguments or facts that would lead the Department to

depart from its original conclusion with respect to this issue. Further, the Department's position has been strengthened, as the respondent notes, with the CAFC's recent holding in *British Steel II*, affirming the Department's discretion to apply the subsidy credit methodology. For these reasons, we continue to apply the credit methodology in these final results.

Comment 3: The ''Change in Ownership'' Issue

BSES argues that the Department should revisit its determinations on the change-in-ownership issues in this case because of the CIT's recent decision in *Delverde SrL* v. *United States* (No. 96–08–01997, Slip Op. 97–163) (CIT Dec. 2, 1997) (*Delverde*). According to the respondent, the *Delverde* court concluded that while the change in ownership provision would permit the Department to find that subsidies pass through in an arm's length transaction, the Department may not conclude that they always pass through. Because the Department determined that the 1986 sale of the special steels business was an arm's length transaction and was consistent with commercial considerations, the respondent argues that the Department must find that UES received no financial benefit when it acquired BSC's special steels division in 1986. According to the respondent, the same conclusion applied to 1995 acquisition of UES, which occurred at arm's length and for fair market value.

In rebuttal, the petitioner argues that the *Delverde* decision has limited precedential value in this case because, in *Delverde*, the CIT explicitly excluded privatization from the analysis, and issued limited instructions about private transactions. The petitioner asserts that the Department's change of ownership methodology is fully consistent with the statute, the legislative history, and the concerns expressed in *Delverde*. The petitioner also contends that the Department's existing privatization and repayment methodologies determine whether and to what extent a subsidy passes through by measuring how much of the subsidy remains with the seller and how much with the buyer and are, therefore, consistent with *Delverde*.

Department's Position

In its opinion in *Delverde*, the CIT did not overturn the Department's methodology. It only directed the Department, on remand, to provide a fuller explanation of its methodology and how it applied it to the facts of the change of ownership transaction at issue. While the CIT did present its views regarding many of the issues that it wanted the Department to address when explaining its methodology, it did not, however, order the Department to adopt any of its views.

On April 2, 1998, the Department filed its remand determination in *Delverde*. In it, the Department continued to follow its existing methodology, and it provided the CIT with the full explanations that it had requested. In these final results, the Department similarly has not made any changes to its methodology based on the *Delverde* opinion.

Comment 4: Whether Subsidies Provided to BS plc Benefit UES

According to the respondent, the Department incorrectly assumed in its preliminary determination that BSES's production of leaded bar benefits from subsidies provided to BS plc solely due to the corporate relationship between the two companies. The respondent asserts that the preliminary determination conflicts with two final CIT decisions: *Armco Inc.* v. *United States*, 733 F. Supp. 1514 (CIT 1990) and *Aimcor* v. *United States*, 871 F. Supp. 447 (CIT 1994). The respondent contends that under the CIT's decisions in *Armco* and *Aimcor*, the Department is required to examine more than the corporate relationship in deciding whether a subsidy has been bestowed.

According to the respondent, in its characterization of *Armco* in the 1995 final results, the Department distorted and confused the CIT's holding that the corporate relationship alone does not support a blanket policy of subsidy attribution. The respondent claims that the Department turned the court's decision on its head when it attempted to limit *Armco*'s statements to the facts of the case. The respondent emphasizes that the *Armco* court did not intend to overturn the Department's general policy of not attributing subsidies between related companies. According to the respondent, the Department contended in the 1995 review that the attribution of subsidies between BS plc and BSES was consistent with *Armco* because BS plc also produced a small quantity of the subject merchandise, which creates the possibility of circumvention. The respondent argues, however, that there is no meaningful possibility of circumvention in this case, because BS plc has a higher countervailing duty rate than BSES, manufactures only a small quantity of subject merchandise, and has not exported any subject merchandise to the United States.

With respect to *Aimcor*, the respondent states that, in the final results of the 1995 review, the Department contended that the issue involved the bestowal rather than the attribution of a subsidy. The respondent argues that the issue decided by the CIT in *Aimcor* did involve attribution, and the Department's position in its brief to the CIT in that case demonstrates that this was the Department's understanding. The respondent emphasizes that even if the parent-company, CVG, had been found to receive a subsidy, the CIT would have concluded in *Aimcor* that such a subsidy did not provide a benefit to the subsidiary, FESILVEN, because the fact that ''CVG exercised some control over FESILVEN does not necessarily indicate that the benefit to CVG passed through to FESILVEN.'' 871 F. Supp. at 451–52.

The respondent also argues that the Department's attribution policy is problematic from a policy perspective. First, it conflicts with the Department's privatization policy, which is based upon the premise that subsidies are provided to the manufacture, production or export of subject merchandise rather than to companies or businesses that produce subject merchandise. Second, the Department's policy will dilute the duties that otherwise would have been imposed on a subsidized productive unit. Therefore, the respondent contends, the Department should not attribute BS plc's subsidies to the production of BSES for the final results of this review.

The petitioner contends that the statue, Department practice, and the particular facts of this review support the Department's attribution of untied subsidies from BS plc to BSES. Petitioner disputes the respondent's attempt to limit *Armco* to a single principle: that attribution of subsidies was appropriate due to the threat of circumvention rather than the corporate relationship between parent and subsidiary. According to the petitioner, the court's decision to attribute subsidies from parent to subsidiary was based on two considerations in addition to circumvention concerns: (1) The status of ASM and Angkasa as parent and wholly owned subsidiary, and (2) the substantial control that ASM exercised over Angkasa's activities. The petitioner argues that all three of these concerns are also present in this case, and that *Armco* therefore supports the Department's attribution decision in the preliminary results. The petitioner also made these arguments in the 1995 administrative review. *See Lead Bar 95 Final Results*, 62 FR at 53111.

Department's Position

The respondent's argument focuses on the Department's interpretation of

Armco and *Aimcor* in the 1995 proceeding, concluding that these CIT decisions prohibit the Department's attribution approach. In the 1995 proceeding, we stated that the *Aimcor* and *Armco* cases ''do not undermine the Department's general principle of attributing untied parent company subsidies to the parent company's consolidated sales.'' More importantly, we stated that the facts of this case do not require the Department ''to find factors in addition to the corporate relationship'' when attributing subsidies from one corporation to another. *Lead Bar 1995 Final Results,* 62 FR at 53313. The Department analyzed numerous cases to illustrate that parent company subsidies have in fact been attributed to the consolidated sales, including the sales of consolidated subsidiaries, solely on the basis of the corporate relationship.[1] The arguments presented by the respondent in this review have not led us to reach a different conclusion.

As a preliminary matter, the respondent's arguments reveal a misunderstanding of the Department's position. According to the respondent's interpretation, the Department would in all cases attribute subsidies from one corporation to another, solely based on the relatedness of those companies. However, the position outlined in the 1995 review concerns only untied subsidies to a parent company and the principle, supported by numerous prior cases, that those subsidies are attributed to the consolidated domestically produced sales of the company, including the domestically produced sales of consolidated subsidiaries. This attribution principle hinges on the facts specific to this case, that the subsidies to the parent company are untied, and the subsidiary companies are consolidated with the parent company. Thus, contrary to the respondent's contention, the position outlined in the 1995 proceeding does not stand for the proposition that subsidies, regardless of their nature, would in all cases be attributed to related companies without an examination of the type of relationship between the companies.

According to the respondent, the *Armco* court required attribution between ASM and Angkasa solely because of the case-specific evidence of circumvention. This decision to attribute subsidies between the related companies, the respondent states, was not intended to ''swallow the Department's general rule of non-attribution, with which the court agreed.'' BSES'' case brief, January 7, 1998 at 17. We disagree with this interpretation. While the *Armco* court may not have endorsed an across-the-board policy of attributing subsidies between related companies, the court clearly stated that the Department's prior determinations ''do not show a blanket policy of automatically not attributing benefits received by one company to a closely related company.'' *Armco,* 733 F. Supp. 1522 (emphasis in original). Rather, the court understood that attribution decisions in prior cases ''turn[ed] essentially upon the Department's findings in particular cases.'' *Id.* The court also recognized that ''the Department has attributed benefits received by one company to a related company'' in other cases. *Id.* (emphasis in original). Accordingly, we do not agree that *Armco* represents an endorsement of a ''general rule of non-attribution.''

Moreover, the case-specific evidence upon which the court relied was not limited solely to evidence of circumvention, as the respondent suggests. As petitioner correctly points out, other crucial factors considered by the court included the nature of the relationship between the parent, ASM, and the subsidiary, Angkasa, and the degree of involvement in each other's business. The court emphasized that ''[a]s the owner of 100 percent of Angkasa's stock, ASM clearly benefits from Angkasa's revenues derived from the export of products to the United States'' and that ''ASM was intimately involved in Angkasa's business decisions and operations. . . .'' *Id.* at 1524. The *Armco* court concluded that ''[t]he present decision is based in part upon the status of ASM and Angkasa as parent and wholly-owned subsidiary. . .'' *Id.* at 1526. To that extent, the Department's determination to attribute BS plc's untied subsidies to the consolidated sales of the company is in conformance with the CIT's decision in *Armco.* Specifically, the Department examined the nature of the subsidies originally bestowed upon BS plc, as well as the relationship between the parent, BS plc, and subsidiary, BSES.[2] In the 1995 proceeding, we stated that BS plc, as 100 percent owner of BSES, ''has the authority to make all major decisions for UES, including any decision to invest in the subsidiary, change its operations, restructure or even close it down.'' See the ''Acquisition Memorandum'' at 4, attached as Exhibit 1 to the petitioner's rebuttal brief, January 14, 1998 (Acquisition Memo). Given these case-specific circumstances, the Department appropriately treated parent, BS plc, and subsidiary, BSES, as one company for purposes of attributing BS plc's untied subsidies. Nothing in the *Armco* decision prohibits such a conclusion, which our discussion in the 1995 final results of this case makes clear.

According to the respondent, however, the Department's discussion in the 1995 final results sought to limit *Armco* to the specific facts underlying the court's ruling. We disagree. Our discussion of *Armco* merely recognized that ''different conclusions may be drawn from different scenarios involving various kinds of subsidies, tied and untied, and companies of varying degrees of relatedness.'' *Lead Bar 1995 Final Results,* 62 FR at 53313. As the court stated, attribution decisions are based ''essentially upon the Department's findings in particular cases.'' *Armco,* 733 F. Supp. at 1522. In light of this, it is the respondent and not the Department that attempts to restrict the court's attribution decision, by stating that the *Armco* ruling represents an ''exception'' to the Department's general rule of non-attribution. However, the court's ruling in *Armco* was not an attempt to create a blanket rule that favored automatic attribution or non-attribution of subsidies between related companies. Rather, the court recognized that, even in the absence of evidence of pass-through, the facts of a case may allow a subsidy to be attributed among related companies. The court specifically stated that subsidies to one company should not escape countervailing duties ''merely because there is no evidence that the subsidiary itself overtly transfers to the parent any specific subsidy benefits received.'' *Id.* at 1525. This was

[1] *See, e.g., Final Affirmative Countervailing Duty Determinations: Certain Steel Products from Belgium,* 58 FR 37293, 37282 (July 9, 1993) (untied subsidies to Sidmar, the parent company, were attributed to the ''total 1991 sales of the Sidmar Group''); *Final Affirmative Countervailing Duty Determinations: Certain Steel Products from Italy,* 58 FR 37327 (July 9, 1993) (a subsidy determined to benefit all production activities was ''allocated over Falck's total consolidated sales,'' *GIA,* 58 FR at 37235); *GIA,* 58 FR at 37262 (the Department ''often treats the parent entity and its subsidiaries as one when determining who ultimately benefits from a subsidy,'' and ''generally allocate[s] subsidies received by parents over sales of their entire group of companies''). *See also, Final Affirmative Countervailing Duty Determination: Certain Hot Rolled Lead and Bismuth Carbon Steel Products from France,* 58 FR 6221, 6223 (January 27, 1993); *Final Affirmative Countervailing Duty Determination: Certain Steel Products from France,* 58 FR 37304 (July 9, 1993) (*French Steel*); *UK Steel* (BS plc argued in that case that untied subsidies ''must be allocated to a company's total corporate output {including foreign operations} and not just to specific products or operations,'' *GIA,* 58 FR at 37236).

[2] We also continue to maintain that legitimate circumvention concerns exist in this case. *See* the discussion in the *Lead Bar 1995 Final Results,* 62 FR at 53313.

precisely our position in the 1995 proceeding, in which we argued that the CIT's decision in *Armco* does not require the Department to find, in all cases, factors in addition to the corporate relationship, when attributing untied parent company subsidies to that company's consolidated sales, including the sales of consolidated subsidiaries. The respondent has not shown that *Armco* requires such factors, or that the Department erred in the many prior cases where precisely the same attribution principle was followed.

The respondent argues that the issue in *Aimcor* involved corporate attribution, and not whether a subsidy was bestowed, as claimed by the Department in the 1995 proceeding. The respondent also makes extensive reference to the Government's February 1994 brief to the court (to restate its position that *Aimcor* prohibits the Department from attributing parent company subsidies to a subsidiary without showing that the subsidy passed-through to the subsidiary). Even assuming, *arguendo*, that attribution was an issue, the facts in *Aimcor* are significantly different from this case such that the Department's decision here is not in conflict with *Aimcor*.[3]

In the investigation underlying the *Aimcor* decision, the Department decided to treat the parent company, CVG, as a separate entity from its subsidiary, FESILVEN, because there was an insufficient ''identity of interests'' between the companies. *Final Affirmative Countervailing Duty Determination: Ferrosilicon from Venezuela*, 58 FR 27539 (May 10, 1993) (*Ferrosilicon from Venezuela*). In this proceeding, however, we did not make a determination that BS plc and BSES should be treated as separate entities. Rather, we found the inverse, that BS plc, as 100-percent owner of its consolidated subsidiary, BSES, ''has the authority to make all major decision for UES, including any decision to invest in the subsidiary, change its operations, restructure or even close it down.''

The Department's analysis in this proceeding, therefore, is fundamentally different from that presented in *Ferrosilicon from Venezuela*. This is further illustrated by the fact that the parent company in *Ferrosilicon from Venezuela*, CVG, was a government-owned holding company. Cases involving the attribution of subsidies between government-owned holding companies and their related companies are not illustrative of the Department's attribution policy concerning untied subsidies to corporations which produce merchandise and which also have numerous consolidated subsidiaries. Rather, in cases involving government-owned holding companies, we have examined whether the holding company, acting as the government, through its investments provided subsidies to its producing subsidiaries. We noted this policy in the 1995 final results, where we stated that in cases involving government-owned holding companies, ''the Department considered whether the government-owned holding company acted as the government in bestowing subsidies to the affiliated companies, *i.e.*, the subsidiaries.'' *Id.* at 53314. No such practice exists, however, for cases involving untied subsidies benefitting corporations such as BS plc, and their consolidated subsidiaries. Rather, the Department's practice in such cases is to ''generally allocate subsidies received by parents over sales of their entire group of companies.'' *GIA*, 58 FR at 37262. This was also the position of the *Aimcor* court, when it stated that ''if Commerce was incorrect in treating the two companies separately, any benefit to CVG may be attributable to FESILVEN.'' *Aimcor*, 871 F. Supp. at 451. In other words, if the ''identity of interests'' between the companies had not been found to be insufficient, any benefit to CVG would also be attributable to FESILVEN. This conforms with our approach in this case, and in the numerous other cases cited by the Department. Accordingly, the respondent has failed to show that the *Aimcor* decision is in conflict with our attribution approach in this proceeding.

Comment 5: Allocation Methodology

The respondent argues that the Department should not apply a company-specific period for allocating subsidies over time, because it produces arbitrary and fluctuating results. Instead, the Department should return to its prior practice of using the IRS tables for the average useful life of assets, and promulgate a regulation consistent with that approach. This approach would provide sufficient support to comply with the concerns raised by the CIT in *British Steel*, because, the respondent states, the CIT's ruling was premised on the fact that the Department's allocation methodology was not supported by regulations. The respondent argues that if the Department does promulgate a regulation stating that it will use the IRS tables, the Department should follow this approach for the final results of this review.

However, if the Department does apply a company-specific allocation period for the final results, the Department should calculate this AUL based on BS plc's average useful life of assets during the ten-year period that most closely overlaps the period of subsidization. This would exclude the period FY 1986/87 through FY 1990/91, where BS plc was found not to have received any subsidies. The respondent further claims that using 14 years to calculate BS plc's AUL is inconsistent with the approach taken by the Department in the countervailing duty questionnaires, in which only ten years of information is sought for the AUL calculation.

The petitioner maintains that the Department should continue to apply BS plc's 18-year company-specific AUL in this review, based upon the prior record of this case and the proposed countervailing duty regulations. Moreover, the CIT in *British Steel* found the prior methodology to be contrary to law. In any case, the petitioner states that BS plc was originally opposed to the IRS tables approach, stating that it was arbitrary.

Department's Position

The countervailing duty regulations have not yet been finalized. Even if the regulations were finalized and the Department did promulgate a regulation stating that it will use the IRS tables, the regulations would not be controlling in the instant review.

The Department's acquiescence to the CIT's decision in *British Steel* resulted in different allocation periods for the same subsidies in two proceedings. Therefore, in the 1995 review of this case, we applied BS plc's company-specific AUL to all nonrecurring subsidies in order to maintain a consistent allocation period across the *UK Steel* and *UK Lead Bar* proceedings. This approach brought the *Lead Bar* proceeding in line with the CIT's ruling in *British Steel*. To now return to the IRS tables in this administrative review would run counter to that ruling, which the Department has followed in all countervailing duty cases since the court affirmed the Department's remand. *See British Steel plc* v. *United States*, 929 F. Supp. 426, 439 (CIT 1996). Therefore, we will not return to the IRS tables for purposes of calculating the allocation period for the final results of this review.

We also find no merit in the respondent's argument that the AUL calculation should be based on BS plc's average useful life of assets during the

[3] It remains our view that the issue of the bestowal of a subsidy was an important issue in the Department's decision in ferrosilicon from Venezuela. *See* the discussion in the *Lead Bar 1995 Final Results*, 62 FR at 53313.

ten-year period that most closely overlaps the period of subsidization, *i.e.*, FY 1976/77 through 1985/86. The Department's decision in the *British Steel* remand to use 14 years of data to calculate the AUL was reasonable. Fourteen years of data were on the record at the time we calculated BS plc's AUL, and we found no reason to exclude it from the calculation. Rather, we found that these data provided a reasonable calculation of BS plc's AUL.

Contrary to the respondent's contention, the approach taken in the *British Steel* remand is not in conflict with the Department's countervailing duty questionnaire. We have found that basing the AUL calculation on ten years of data, as requested in the questionnaire, is reasonable and administrable. However, this does not indicate that an AUL calculation based on more or fewer years would be incorrect or inaccurate. Furthermore, assuming the Department had chosen ten years of data, that information would be taken from the years immediately preceding the investigation. In this case, that would be FY 1981/82 through FY 1990/91. Therefore, the respondent cannot argue in hindsight and for its own convenience that the AUL should be recalculated using the ten-year period that most closely overlaps the period of subsidization. For these reasons, we will not recalculate BS plc's AUL.

Comment 6: Subsidy Repayment Methodology

BSES asserts that the Department should revise its calculation of the amount of subsidies that are considered repaid with privatization. According to the respondent, the ratio of subsidies to net worth that the Department currently uses is unreasonable because it is based upon the subsidies' historical value. The result is arbitrary because the company's historical subsidy worth may have no relationship to the company's subsidy worth at the time of privatization. The respondent argues that it would make more sense to use a ratio of (1) the total unamortized value of non-recurring subsidies at the time of privatization to (2) the net worth of the company being privatized. According to the respondent, the suggested approach would also be consistent with the Department's practice of amortizing subsidies.

According to the petitioner, the only appropriate change to the Department's methodology would be its abolition; however, if the Department continues to assume that a portion of the purchase price of a government-owned company represents the repayment of subsidies, the Department's existing methodology is the most reasonable valuation of repayment. The petitioner contends that BSES's proposed approach is ill-advised and inconsistent with the Department's practice.

Department's Position

While respondent has suggested some alternatives to the Department's subsidy payment methodology, we believe the Department's current methodology is reasonable in accomplishing the intended purpose of determining what portion of the purchase price is allocable to prior subsidies. Indeed, the Federal Circuit has stated that ''the methodology developed by Commerce to account for the repayment of subsidies during privatization is a reasonable interpretation of the countervailing duty statute.'' *British Steel plc* v. *United States*, 127 F.3d 1471, 1475 (Fed. Cir. 1997). Moreover, the Department's subsidy calculation methodology is currently subject to judicial review which the court has yet to address. For these reasons, we will continue to use the methodology as set out and explained in the *GIA*.

Final Results of Review

In accordance with 19 CFR 355.22(c)(4)(ii), we calculated an individual subsidy rate for each producer/exporter subject to this administrative review. As discussed in the ''Change in Ownership'' section of the notice, above, we are treating British Steel plc and British Steel Engineering Steels as one company for purposes of this proceeding. For the period January 1, 1996 through December 31, 1996, we determine the net subsidy for British Steel plc/British Steel Engineering Steels (BS plc/BSES) to be 5.28 percent *ad valorem*.

We will instruct the Customs Service to assess countervailing duties for BS plc/BSES at 5.28 percent *ad valorem*. The Department will also instruct Customs to collect a cash deposit of estimated countervailing duties of 5.28 percent of the f.o.b. invoice price on all shipments of the subject merchandise from BS plc/BSES entered, or withdrawn from warehouse, for consumption on or after the date of publication of the final results of this review.

Because the URAA replaced the general rule in favor of a country-wide rate with a general rule in favor of individual rates for investigated and reviewed companies, the procedures for establishing countervailing duty rates, including those for non-reviewed companies, are now essentially the same as those in antidumping cases, except as provided for in § 777A(e)(2)(B) of the Act. The requested review will normally cover only those companies specifically named. *See* 19 CFR 355.22(a). Pursuant to 19 CFR 355.22(g), for all companies for which a review was not requested, duties must be assessed at the cash deposit rate, and cash deposits must continue to be collected at the rate previously ordered. As such, the countervailing duty cash deposit rate applicable to a company can no longer change, except pursuant to a request for a review of that company. *See Federal-Mogul Corporation and The Torrington Company* v. *United States*, 822 F.Supp. 782 (CIT 1993) and *Floral Trade Council* v. *United States*, 822 F.Supp. 766 (CIT 1993) (interpreting 19 CFR 353.22(e) (now 19 CFR 351.212(c)), the antidumping regulation on automatic assessment, which is identical to 19 CFR 355.22(g)). Therefore, the cash deposit rates for all companies except those covered by this review will be unchanged by the results of this review.

We will instruct Customs to continue to collect cash deposits for non-reviewed companies at the most recent company-specific or country-wide rate applicable to the company. Accordingly, the cash deposit rates that will be applied to non-reviewed companies covered by this order are those established in the most recently completed administrative proceeding, conducted pursuant to the statutory provisions that were in effect prior to the URAA amendments. *See, Certain Hot-Rolled Lead and Bismuth Carbon Steel Products from the United Kingdom; Final Results of Countervailing Duty Administrative Review*, 60 FR 54841 (October 26, 1995). These rates shall apply to all non-reviewed companies until a review of a company assigned these rates is requested. In addition, for the period January 1, 1996 through December 31, 1996, the assessment rates applicable to all non-reviewed companies covered by this order are the cash deposit rates in effect at the time of entry.

This notice serves as a reminder to parties subject to administrative protective order (APO) of their responsibility concerning the disposition of proprietary information disclosed under APO in accordance with 19 CFR 355.34(d). Timely written notification of return/destruction of APO materials or conversion to judicial protective order is hereby requested. Failure to comply with the regulations and the terms of an APO is a sanctionable violation.

This administrative review and notice are in accordance with section 751(a)(1) of the Act (19 U.S.C. 1675(a)(1)).

Dated: April 7, 1998.

Robert S. LaRussa,

Assistant Secretary for Import Administration.

[FR Doc. 98–9870 Filed 4–14–98; 8:45 am]

BILLING CODE 3510–DS–P

DEPARTMENT OF COMMERCE

National Oceanic and Atmospheric Administration

Saltonstall-Kennedy (S–K) Grant Program Application and Progress and Final Report Formats

ACTION: Proposed collection; comment request.

SUMMARY: The Department of Commerce, as part of its continuing effort to reduce paperwork and respondent burden, invites the general public and other Federal agencies to take this opportunity to comment on proposed and/or continuing information collections, as required by the Paperwork Reduction Act of 1995, Pub. L. 104–13 (44 U.S.C. 3506(c)(2)(A)).

DATES: Written comments must be submitted on or before June 15, 1998.

ADDRESSES: Direct written comments to Linda Engelmeier, Departmental Forms Clearance Officer, Department of Commerce, Room 5327, 14th and Constitution Avenue, NW, Washington, D.C. 20230.

FOR FURTHER INFORMATION CONTACT: Requests for additional information or copies of the information collection instrument(s) and instructions should be directed to Alicia L. Jarboe, S–K Program Manager, Financial Services Division, Office of Sustainable Fisheries, National Marine Fisheries Service, 1315 East West Highway, Silver Spring, Maryland 20910, (301) 713–2358. In addition, the S–K application package is available on the NMFS Home Page, at: www.nmfs.gov/sfweb/skhome.html.

SUPPLEMENTARY INFORMATION:

I. Abstract

The S–K Program provides financial assistance on a competitive basis for research and development projects that address various aspects of U.S. fisheries (commercial or recreational), including but not limited to, harvesting, processing, marketing, and associated infrastructures. Projects that primarily involve business start-up or infrastructure development are not eligible for funding. Respondents to the application forms will be universities, State and local governments, fisheries development foundations, industry associations, private companies, and individuals applying to the S–K Program for grant funds. Respondents to the progress and final report formats will be successful applicants who are recipients of S–K funds.

II. Method of Collection

The collection-of-information will be collected on the S–K Program application package including Project Summary and Project Budget forms, and using the Semi-Annual Progress Report and Project Final Report formats. Approved final reports must be submitted electronically in either WordPerfect (version 6.1 or lower) or MSWord (97 version or earlier). NOAA will consider requests for exemption from the requirement for electronic submission, or for submission in a different format than specified above.

III. Data

OMB Number: 0648–0135.

Form Number: NOAA Forms 88–204 and 88–205.

Type of Review: Regular Submission.

Affected Public: Business and other for profit; not-for-profit institutions; State, local, or tribal governments.

Estimated Number of Respondents: 210.

Estimated Time Per Response: 2 hours for project summary and budget, 6 hours for remainder of application package, 2 hours for progress reports, and 13 hours for final reports.

Estimated Total Annual Burden Hours: 2,245 hours.

Estimated Total Annual Cost to Public: No capital, operations, or maintenance costs are expected.

IV. Request for Comments

Comments are invited on: (a) Whether the proposed collection-of-information is necessary for the proper performance of the functions of the agency, including whether the information shall have practical utility; (b) the accuracy of the agency's estimate of the burden (including hours and cost) of the proposed collection-of-information; (c) ways to enhance the quality, utility, and clarity of the information to be collected; and (d) ways to minimize the burden of the collection-of-information on respondents, including through the use of automated collection techniques or other forms of information technology.

Comments submitted in response to this notice will be summarized and/or included in the request for OMB approval of this information collection; they also will become a matter of public record.

Dated: April 9, 1998.

Linda Engelmeier,

Departmental Forms Clearance Officer, Office of Management and Organization.

[FR Doc. 98–9913 Filed 4–14–98; 8:45 am]

BILLING CODE 3510–22–P

DEPARTMENT OF COMMERCE

National Oceanic and Atmospheric Administration

Application for Dean John A. Knauss Marine Policy Fellowship

ACTION: Proposed collection; comment request.

SUMMARY: The Department of Commerce, as part of its continuing effort to reduce paperwork and respondent burden, invites the general public and other Federal agencies to take this opportunity to comment on proposed and/or continuing information collections, as required by the Paperwork Reduction Act of 1995, Pub. L. 104–13 (44 U.S.C. 3506(c)(2)(A)).

DATES: Written comments must be submitted on or before June 15, 1998.

ADDRESSES: Direct all written comments to Linda Engelmeier, Departmental Forms Clearance Officer, Department of Commerce, Room 5327, 14th and Constitution Avenue, NW, Washington DC 20230.

FOR FURTHER INFORMATION CONTACT: Requests for additional information or copies of the information collection instrument(s) and instructions should be directed to Dr. Francis M. Schuler; Executive Director, National Sea Grant College Program, NOAA (R/SG), Silver Spring, MD 20910 (301–713–2445).

SUPPLEMENTARY INFORMATION:

I. Abstract

The National Sea Grant Federal Fellows Program/Dean John A. Knauss Policy Fellowship was established to provide a unique educational experience for students enrolled in graduate programs in fields related to marine or Great Lakes studies. The program matches highly qualified graduate students with hosts in the Legislative or Executive Branches, or with appropriate associations or institutions located in Washington, D.C. Applicants must complete and submit an application.

II. Method of Collection

A **Federal Register** notice is periodically published to solicit applications. No forms are used.

III. Data

OMB Number: 0648–0294.

Form Number: N/A.
Type of Review: Regular Submission.
Affected Public: Not for-profit institutions, individuals.
Estimated Number of Respondents: 50.
Estimated Time Per Response: 2 hours.
Estimated Total Annual Burden Hours: 100 hours.
Estimated Total Annual Cost: $0 (no capital expenditures).

IV. Request for Comments

Comments are invited on: (a) Whether the proposed collection of information is necessary for the proper performance of the functions of the agency, including whether the information shall have practical utility; (b) the accuracy of the agency's estimate of the burden (including hours and cost) of the proposed collection of information; (c) ways to enhance the quality, utility, and clarity of the information to be collected; and (d) ways to minimize the burden of the collection of information on respondents, including through the use of automated collection techniques or other forms of information technology.

Comments submitted in response to this notice will be summarized and/or included in the request for OMB approval of this information collection; they also will become a matter of public record.

Dated: April 9, 1998.

Linda Engelmeier,

Departmental Forms Clearance Officer, Office of Management and Organization.

[FR Doc. 98–9914 Filed 4–14–98; 8:45 am]

BILLING CODE 3510–12–P

DEPARTMENT OF COMMERCE

National Oceanic and Atmospheric Administration

Application for Designation as a Sea Grant College

ACTION: Proposed collection; comment request.

SUMMARY: The Department of Commerce, as part of its continuing effort to reduce paperwork and respondent burden, invites the general public and other Federal agencies to take this opportunity to comment on proposed and/or continuing information collections, as required by the Paperwork Reduction Act of 1995, Pub. L. 104–13 (44 U.S.C. 3506(c)(2)(A)).

DATES: Written comments must be submitted on or before June 15, 1998.

ADDRESSES: Direct all written comments to Linda Engelmeier, Departmental Forms Clearance Officer, Department of Commerce, Room 5327, 14th and Constitution Avenue, NW, Washington DC 20230.

FOR FURTHER INFORMATION CONTACT: Requests for additional information or copies of the information collection instrument(s) and instructions should be directed to Dr. Francis M. Schuler; Executive Director, National Sea Grant College Program, NOAA (R/SG), Silver Spring, MD 20910 (301–713–2445).

SUPPLEMENTARY INFORMATION:

I. Abstract

NOAA's Sea Grant Program exists to increase the understanding, assessment, development, utilization, and conservation of the Nation's ocean, coastal, and Great Lakes resources. It does this by promoting a strong educational base, responsive research, and training. Pub. L. 105–160 provides for the designation of eligible institutions as Sea Grant colleges. Information must be submitted on the organization's capabilities to allow NOAA to determine if the applicant meets the standards for designation.

II. Method of Collection

Requirements are contained in 15 CFR 917. No forms are used.

III. Data

OMB Number: 0648–0147.
Form Number: N/A.
Type of Review: Regular Submission.
Affected Public: Not-for-profit institutions.
Estimated Number of Respondents: 1.
Estimated Time Per Response: 20 hours.
Estimated Total Annual Burden Hours: 20 hours.
Estimated Total Annual Cost: $0 (no capital expenditures).

IV. Request for Comments

Comments are invited on: (a) Whether the proposed collection of information is necessary for the proper performance of the functions of the agency, including whether the information shall have practical utility; (b) the accuracy of the agency's estimate of the burden (including hours and cost) of the proposed collection of information; (c) ways to enhance the quality, utility, and clarity of the information to be collected; and (d) ways to minimize the burden of the collection of information on respondents, including through the use of automated collection techniques or other forms of information technology.

Comments submitted in response to this notice will be summarized and/or included in the request for OMB approval of this information collection; they also will become a matter of public record.

Dated: April 9, 1998.

Linda Engelmeier,

Departmental Forms Clearance Officer, Office of Management and Organization.

[FR Doc. 98–9915 Filed 4–14–98; 8:45 am]

BILLING CODE 3510–12–P

DEPARTMENT OF COMMERCE

National Oceanic and Atmospheric Administration

Sea Grant Budget

ACTION: Proposed collection; comment request.

SUMMARY: The Department of Commerce, as part of its continuing effort to reduce paperwork and respondent burden, invites the general public and other Federal agencies to take this opportunity to comment on proposed and/or continuing information collections, as required by the Paperwork Reduction Act of 1995, Pub. L. 104–13 (44 U.S.C. 3506(c)(2)(A)).

DATES: Written comments must be submitted on or before June 15, 1998.

ADDRESSES: Direct all written comments to Linda Engelmeier, Departmental Forms Clearance Officer, Department of Commerce, Room 5327, 14th and Constitution Avenue, NW, Washington DC 20230.

FOR FURTHER INFORMATION CONTACT: Requests for additional information or copies of the information collection instrument(s) and instructions should be directed to Dr. Francis M. Schuler; Executive Director, National Sea Grant College Program, NOAA (R/SG), Silver Spring, MD 20910 (301–713–2445).

SUPPLEMENTARY INFORMATION:

I. Abstract

NOAA's Sea Grant Program exists to increase the understanding, assessment, development, utilization, and conservation of the Nation's ocean, coastal, and Great Lakes resources. It does this by promoting a strong educational base, responsive research, and training. Grant monies are available for related activities. Applications must include the NOAA Form 90–4, Sea Grant Budget, which details the Sea Grant and grantee funding expected for the project, broken down by a number of cost categories. The information is used by both NOAA and the grantee to determine costs and whether proposed matching costs are allowable. The information is also used in negotiating

costs and in the administrative control of expenditures.

II. Method of Collection

NOAA Form 90–4 is submitted as part of grant applications.

III. Data

OMB Number: 0648–0034.
Form Number: NOAA Form 90–4.
Type of Review: Regular Submission.
Affected Public: Not-for-profit institutions, State or local government.
Estimated Number of Respondents: 40.
Estimated Time Per Response: 15 minutes.
Estimated Total Annual Burden Hours: 200 hours.
Estimated Total Annual Cost: $0 (no capital expenditures).

IV. Request for Comments

Comments are invited on: (a) Whether the proposed collection of information is necessary for the proper performance of the functions of the agency, including whether the information shall have practical utility; (b) the accuracy of the agency's estimate of the burden (including hours and cost) of the proposed collection of information; (c) ways to enhance the quality, utility, and clarity of the information to be collected; and (d) ways to minimize the burden of the collection of information on respondents, including through the use of automated collection techniques or other forms of information technology.

Comments submitted in response to this notice will be summarized and/or included in the request for OMB approval of this information collection; they also will become a matter of public record.

Dated: April 9, 1998.

Linda Engelmeier,

Departmental Forms Clearance Officer, Office of Management and Organization.

[FR Doc. 98–9916 Filed 4–14–98; 8:45 am]

BILLING CODE 3510–12–P

DEPARTMENT OF COMMERCE

National Oceanic and Atmospheric Administration

Sea Grant Project Summary

ACTION: Proposed collection; comment request.

SUMMARY: The Department of Commerce, as part of its continuing effort to reduce paperwork and respondent burden, invites the general public and other Federal agencies to take this opportunity to comment on proposed and/or continuing information collections, as required by the Paperwork Reduction Act of 1995, Pub. L. 104–13 (44 U.S.C. 3506(c)(2)(A)).

DATES: Written comments must be submitted on or before June 15, 1998.

ADDRESSES: Direct all written comments to Linda Engelmeier, Departmental Forms Clearance Officer, Department of Commerce, Room 5327, 14th and Constitution Avenue, NW, Washington DC 20230.

FOR FURTHER INFORMATION CONTACT: Requests for additional information or copies of the information collection instrument(s) and instructions should be directed to Dr. Francis M. Schuler; Executive Director, National Sea Grant College Program, NOAA (R/SG), Silver Spring, MD 20910 (301–713–2445).

SUPPLEMENTARY INFORMATION:

I. Abstract

NOAA's Sea Grant Program exists to increase the understanding, assessment, development, utilization, and conservation of the Nation's ocean, coastal, and Great Lakes resources. It does this by promoting a strong educational base, responsive research, and training. Grant monies are available for related activities. The Project Summary provides information on the project status (for continuing projects applying for additional funding), the investigators and the level of their effort, the objectives and methodology of the project, and similar summary information. The information is needed to help evaluate proposals, but is also made available to the public in a database where potential applicants can see what projects are being funded.

II. Method of Collection

The information is submitted as part of the application process. No form is used.

III. Data

OMB Number: 0648–0019.
Form Number: N/A.
Type of Review: Regular Submission.
Affected Public: Public or private institutions of higher education, institute, laboratory, or State or local agency.
Estimated Number of Respondents: 40.
Estimated Time Per Response: 20 minutes.
Estimated Total Annual Burden Hours: 240 hours.
Estimated Total Annual Cost: $0 (no capital expenditures).

IV. Request for Comments

Comments are invited on: (a) Whether the proposed collection of information is necessary for the proper performance of the functions of the agency, including whether the information shall have practical utility; (b) the accuracy of the agency's estimate of the burden (including hours and cost) of the proposed collection of information; (c) ways to enhance the quality, utility, and clarity of the information to be collected; and (d) ways to minimize the burden of the collection of information on respondents, including through the use of automated collection techniques or other forms of information technology.

Comments submitted in response to this notice will be summarized and/or included in the request for OMB approval of this information collection; they also will become a matter of public record.

Dated: April 9, 1998.

Linda Engelmeier,

Departmental Forms Clearance Officer, Office of Management and Organization.

[FR Doc. 98–9917 Filed 4–14–98; 8:45 am]

BILLING CODE 3510–12–P

DEPARTMENT OF COMMERCE

National Oceanic and Atmospheric Administration

[I.D. 040198A]

Marine Mammals

AGENCY: National Marine Fisheries Service (NMFS), National Oceanic and Atmospheric Administration (NOAA), Commerce.

ACTION: Receipt of application for amendment.

SUMMARY: Notice is hereby given that the Southwest Fisheries Science Center, Honolulu Laboratory, National Marine Fisheries Service, 2570 Dole Street, Honolulu, Hawaii 96822–2396, has requested an amendment to scientific research Permit No. 848–1335.

DATES: Written or telefaxed comments must be received on or before May 15, 1998.

ADDRESSES: The amendment request and related documents are available for review upon written request or by appointment in the following office(s):

Permits Division, Office of Protected Resources, NMFS, 1315 East-West Highway, Room 13705, Silver Spring, MD 20910 (301/713–2289);

Regional Administrator, Southwest Region, National Marine Fisheries Service, 501 West Ocean Blvd., Suite 4200, Long Beach, CA 90802–4213 (562/980–4001); and

Protected Species Program Manager, Pacific Islands Area Office, 2570 Dole

Street, Room 106, Honolulu, HI 96822–2396 (808/973–2941).

Written data or views, or requests for a public hearing on this request should be submitted to the Chief, Permits and Documentation Division, F/PR1, Office of Protected Resources, National Marine Fisheries Service, Silver Spring, MD 20910. Those individuals requesting a hearing should set forth the specific reasons why a hearing on this particular request would be appropriate.

Comments may also be submitted by facsimile at (301) 713–0376, provided the facsimile is confirmed by hard copy submitted by mail and postmarked no later than the closing date of the comment period. Please note that comments will not be accepted by e-mail or other electronic media.

FOR FURTHER INFORMATION CONTACT: Jeannie Drevenak, 301/713–2289.

SUPPLEMENTARY INFORMATION: The subject amendment to Permit No. 848–1335, issued on June 10, 1997 (62 FR 32586) is requested under the authority of the Marine Mammal Protection Act of 1972, as amended (16 U.S.C. 1361 *et seq.*), the Regulations Governing the Taking and Importing of Marine Mammals (50 CFR part 216), the endangered species Act of 1973, as amended (16 U.S.C. 1531 *et seq.*), and the regulations governing the taking, importing, and exporting of endangered fish and wildlife (50 FR 222.23).

The permit holder is currently authorized to conduct population assessment, disease assessment, recovery actions, and pelagic ecology studies of Hawaiian monk seals (*Monachus* schauinslandi) at all locations within the Hawaiian Archipelago and at Johnston Atoll, through May 31, 2002. The permit holder is now requesting authorization to conduct sedation studies on up to 10 captive, unreleasable, female Hawaiian monk seals. The purpose of the proposed study is to determine the safety and efficacy of various drugs for sedating monk seals in the field. Biological specimens (i.e., blood (35 cc), swabs from natural orifices, and 6 mm blubber biopsy punches) will be collected from the animals during the sedation trials.

In compliance with the National Environmental Policy Act of 1969 (42 U.S.C. 4321 et seq.), an initial determination has been made that the activity proposed is categorically excluded from the requirement to prepare an environmental assessment or environmental impact statement.

Concurrent with the publication of this notice in the **Federal Register**, NMFS is forwarding copies of this application to the Marine Mammal Commission and its Committee of Scientific Advisors.

Dated: April 9, 1998.

Ann D. Terbush,

Chief, Permits and Documentation Division, Office of Protected Resources, National Marine Fisheries Service.

[FR Doc. 98–9978 Filed 4–14–98; 8:45 am]

BILLING CODE 3510–22–F

DEPARTMENT OF COMMERCE

National Oceanic and Atmospheric Administration

[I.D. 032598B]

Marine Mammals; Scientific Research Permit (PHF# 895–1450)

AGENCY: National Marine Fisheries Service (NMFS), National Oceanic and Atmospheric Administration (NOAA), Commerce.

ACTION: Receipt of application.

SUMMARY: Notice is hereby given that Ms. Rachel Cartwright, 10 Greave, Romiley, Stockport, Cheshire SK6 4PU, England, has applied in due form for a permit to take North Pacific humpback whales (*Megaptera novaeangliae*) for purposes of scientific research.

DATES: Written comments must be received on or before May 15, 1998.

ADDRESSES: The application and related documents are available for review upon written request or by appointment in the following office(s):

Permits Division, Office of Protected Resources, NMFS, 1315 East-West Highway, Room 13130, Silver Spring, MD 20910 (301/713–2289);

Regional Administrator, Southwest Region, 501 West Ocean Boulevard, Suite 4200, Long Beach, CA 90802-4213 (562/980-4001); and

Protected Species Program Manager, Pacific Islands Area Office, 2570 Dole Street, Room 106, Honolulu, HI 9682–2396 (808/973–2987).

Written data or views, or requests for a public hearing on this request, should be submitted to the Director, Office of Protected Resources, NMFS, 1315 East-West Highway, Room 13705, Silver Spring, MD 20910. Those individuals requesting a hearing should set forth the specific reasons why a hearing on this application would be appropriate.

Comments may also be submitted by facsimile at (301) 713–0376, provided the facsimile is confirmed by hard copy submitted by mail and postmarked no later than the closing date of the comment period. Please note that comments will not be accepted by e-mail or by other electronic media.

FOR FURTHER INFORMATION CONTACT: Jeannie Drevenak, 301/713–2289.

SUPPLEMENTARY INFORMATION: The subject permit is requested under the authority of the Marine Mammal Protection Act of 1972, as amended (16 U.S.C. 1361 *et seq.*), the Regulations Governing the Taking and Importing of Marine Mammals (50 CFR part 216), the Endangered Species Act of 1973, as amended (16 U.S.C. 1531 *et seq.*), and the regulations governing the taking, importing, and exporting of endangered fish and wildlife (50 CFR 222.23).

The purpose of the proposed research is to study humpback whale calf behavior and development in Hawaii waters, over a three year period.

In compliance with the National Environmental Policy Act of 1969 (42 U.S.C. 4321 *et seq.*),an initial determination has been made that the activity proposed is categorically excluded from the requirement to prepare an environmental assessment or environmental impact statement.

Concurrent with the publication of this notice in the **Federal Register**, NMFS is forwarding copies of this application to the Marine Mammal Commission and its Committee of Scientific Advisors.

Dated: April 9, 1998.

Ann D. Terbush,

Chief, Permits and Documentation Division, Office of Protected Resources, National Marine Fisheries Service.

[FR Doc. 98–9979 Filed 4–14–98; 8:45 am]

BILLING CODE 3510–22–F

COMMITTEE FOR THE IMPLEMENTATION OF TEXTILE AGREEMENTS

Increase of a Guaranteed Access Level for Certain Wool Textile Products Produced or Manufactured in the Dominican Republic

April 10, 1998.

AGENCY: Committee for the Implementation of Textile Agreements (CITA).

ACTION: Issuing a directive to the Commissioner of Customs increasing a guaranteed access level.

EFFECTIVE DATE: April 15, 1998.

FOR FURTHER INFORMATION CONTACT: Roy Unger, International Trade Specialist, Office of Textiles and Apparel, U.S. Department of Commerce, (202) 482–4212. For information on the quota status of this level, refer to the Quota Status Reports posted on the bulletin

boards of each Customs port or call (202) 927–5850. For information on embargoes and quota re-openings, call (202) 482–3715.

SUPPLEMENTARY INFORMATION:

Authority: Section 204 of the Agricultural Act of 1956, as amended (7 U.S.C. 1854); Executive Order 11651 of March 3, 1972, as amended.

Upon a request from the Government of the Dominican Republic, the U.S. Government agreed to increase the current guaranteed access level for Category 433.

A description of the textile and apparel categories in terms of HTS numbers is available in the CORRELATION: Textile and Apparel Categories with the Harmonized Tariff Schedule of the United States (see **Federal Register** notice 62 FR 66057, published on December 17, 1997). Also see 62 FR 67622, published on December 29, 1997.

Troy H. Cribb,

Chairman, Committee for the Implementation of Textile Agreements.

Committee for the Implementation of Textile Agreements

April 10, 1998.

Commissioner of Customs,
Department of the Treasury, Washington, DC 20229.

Dear Commissioner: This directive amends, but does not cancel, the directive issued to you on December 19, 1997, by the Chairman, Committee for the Implementation of Textile Agreements. That directive concerns imports of certain cotton, wool and man-made fiber textile products, produced or manufactured in the Dominican Republic and exported during 1998.

Effective on April 15, 1998, you are directed to increase the guaranteed access level for Category 433 to 41,000 dozen.

The Committee for the Implementation of Textile Agreements has determined that this action falls within the foreign affairs exception of the rulemaking provisions of 5 U.S.C. 553(a)(1).

Sincerely,

Troy H. Cribb,

Chairman, Committee for the Implementation of Textile Agreements.

[FR Doc. 98–9980 Filed 4–14–98; 8:45 am]

BILLING CODE 3510–DR–F

CORPORATION FOR NATIONAL AND COMMUNITY SERVICE

AmeriCorps State Formula Program Grants: North Dakota and South Dakota

AGENCY: Corporation for National and Community Service.

ACTION: Notice of availability of funds for new and renewal grants; notice of availability of 1998 application guidelines.

SUMMARY: The Corporation for National and Community Service (Corporation) announces the availability of approximately $450,000 to support new national service programs in North Dakota and approximately $450,000 to support new and renewal national service programs in South Dakota. (CFDA #94.004).

DATES: To be considered, applications must be received by 3:30 p.m., Eastern Standard Time, June 23, 1998.

ADDRESSES: Applications must be submitted to the Corporation for National Service, 1201 New York Avenue NW., Box SND, Washington, DC 20525. Facsimiles will not be accepted.

FOR FURTHER INFORMATION: For further information contact James Cooper, Corporation for National Service, 1201 New York Avenue, NW., Washington, DC 20525, phone (202) 606–5000, ext. 149, TDD (202) 565–2799.

SUPPLEMENTARY INFORMATION: Application guidelines may be obtained by calling Tanya Archie, Corporation for National Service, (202) 606–5000, ext. 476.

These funds are authorized under the National and Community Service Act of 1990, as amended, and represent the statute's population-based provision of program assistance formula funds that, in most cases, flow through approved state commissions on national and community service. Because neither North Dakota nor South Dakota currently maintains an approved state commission or alternative administrative entity, eligible entities may apply directly to the Corporation for formula funds. Local government agencies, institutions of higher education, public or private nonprofit organizations, and Indian Tribes in North Dakota and South Dakota are eligible entities. An organization described in section 501(c)(4) of the Internal Revenue Code of 1986, 26 U.S.C. 501(c)(4), that engages in lobbying activities is not eligible for these funds.

Requirements relating to this assistance are published at 45 CFR Parts 2510 *et seq.* and are further described in the application guidelines. The Corporation will also provide *Principles for High Quality National Service Programs,* which includes program examples, upon request.

Organizations interested in applying for these program funds may participate in one of two conference calls to be held on May 8, 1998 and June 5, 1998, respectively, during which Corporation staff will provide technical assistance to potential applicants. The calls will begin at 1:00 p.m. and conclude at 3:00 p.m. (EST). To register for either call, please contact Rosa Harrison, at (202) 606–5000, ext. 433. Upon registration, you will be apprised of the applicable 800 number needed for participation.

The provision of these grants is subject to the availability of appropriated funds.

Dated: April 9, 1998.

Kenneth L. Klothen,

General Counsel, Corporation for National and Community Service.

[FR Doc. 98–9887 Filed 4–14–98; 8:45 am]

BILLING CODE 6050–28–P

CORPORATION FOR NATIONAL AND COMMUNITY SERVICE

Availability of Funds for New Foster Grandparent Projects—Nationwide

AGENCY: Corporation for National and Community Service.

ACTION: Notice of availability of funds.

SUMMARY: The Corporation for National and Community Service (hereinafter the ''Corporation'') announces the availability of up to $3,000,000 to support 684 Foster Grandparents in new geographic areas that do not fall within approved geographic service areas of current Foster Grandparent program sponsors or urban areas or large counties where the project serves only part of the city or county. Approximately $1,500,000 will be made available to support each of two national organizations and six of their local affiliates. Each national organization will be expected to provide coordination, networking, and training and technical assistance to its local affiliates. The affiliates of each national organization will support a total of approximately 337 Foster Grandparents for each national organization. Awards will cover a twelve-month period and can be renewed for up to twenty-four additional months contingent upon the continuing need for the projects, performance and the availability of appropriations. This allows the Corporation to fund multi-state and multi-site projects that are national in scope and build on the existing networks of the national organizations. The Corporation is seeking national organizations that are willing to actively promote senior service within their own networks and that view older volunteers as an important resource in accomplishing their own objectives.

The purpose of the Foster Grandparent Program is to provide

opportunities for income eligible individuals 60 years of age and over to serve children and youth with special or exceptional needs on a person to person basis. The primary focus of volunteer activities for this twelve-month period must be on helping children learn to read and other literacy activities that support the goals of the America Reads Challenge.

DATES: Applications must be received by 5 p.m. Eastern Daylight Time, May 11, 1998.

ADDRESSES: Application instructions and kits are available from the Corporation for National and Community Service, National Senior Service Corps, 1201 New York Avenue, NW., Washington, DC 20525, (202) 606–5000, ext. 261, TDD (202) 565–2799, or TTY via the Federal Information Relay Service at 1–(800) 877–8339. Applications should be submitted to the Corporation for National and Community Service, 1201 New York Avenue, NW., National Senior Service Corps, Mailstop 9310, Attn: Barbara Wilson, Washington, DC 20525. The Corporation will not accept applications that are submitted via facsimile or e-mail transmission.

SUPPLEMENTARY INFORMATION:

A. Background

The Corporation is a federal government corporation that encourages Americans of all ages and backgrounds to engage in community-based service. This service addresses the nation's educational, public safety, environmental, and other human needs to achieve direct and demonstrable results. In supporting service programs, the Corporation fosters civic responsibility, strengthens the ties that bind us together as a people, and provides educational opportunity for those who make a substantial commitment to service.

The Foster Grandparent Program (FACP.) is authorized by the Domestic Volunteer Service Act of 1973, as amended. See 42 U.S.C. 5011 *et seq.* The FCP. is one of three programs that comprise the National Senior Service Corps. All three Senior Corps programs are based on the premise that seniors are valuable resources, can be mobilized to help meet priority community needs, and through their skills and talents can have an impact on national problems of local concern. The FCP provides communities with valuable service by empowering older adults to contribute to their communities through volunteer service and enhance the lives of the volunteers and those they serve.

The program began in 1965 as a national demonstration designed to show that low-income persons 60 years of age and over having the maturity and experience to establish a personal relationship with children having either special or exceptional needs. Today there are over 21,000 Foster Grandparents providing care and attention every day to more than 80,000 qualified children and youth. Foster Grandparents volunteer in schools, hospitals, drug treatment centers, correctional institutions, and Head Start and day care centers. They offer emotional support to children who have been abused and neglected, mentor troubled teenagers and young mothers, care for premature infants and children with physical disabilities or severe illnesses, including AIDS. This special relationship and high level of personal care provided by Foster Grandparents helps young people grow, gain confidence, and become more productive members of society.

B. Purpose of This Announcement

The Corporation is soliciting applications from national nonprofit organizations in order to fund multi-state and multi-site projects that are national in scope and build on existing networks of the national organizations. The Corporation is interested in expanding the FCP. to serve new geographic locations currently unserved by the program. It is expected that the new projects, in the first year of operation, will focus on activities that support the goals of the America Reads Challenge.

The goal of the America Reads Challenge is to mobilize Americans from all walks of life to ensure that all children can read well and independently by the end of third grade. The America Reads Challenge is a comprehensive, nationwide effort to create in-school, after-school, weekend, and summer tutoring programs in reading. Working to support the efforts of teachers and parents, this initiative calls on all Americans, including college students, business leaders, and senior citizens, to work through schools, libraries, religious organizations, universities, community and national groups, and cultural organizations to ensure that every child can read independently by the end of third grade. Grantees will be encouraged to develop strong partnerships with: (1) Entities planning or operating city, county, statewide, or multi-state America Reads initiatives; (2) local governments planning or operating area-wide America Reads initiatives; (3) volunteer centers engaged in recruiting trained literacy tutors for the America Reads Challenge and, (4) university service-learning centers coordinating work-study and other college students for the America Reads Challenge.

C. Eligible Applicants

National nonprofit organizations that operate in more than one state are eligible to apply. The Corporation defines a national nonprofit organization as one whose mission, membership and activities, or constituencies are national in scope. However, an organization described in section 501(c)(4) of the Internal Revenue Code of 1986, (26 U.S.C. 501(c)(4)) that engages in lobbying activities is not eligible to apply, serve as a host site for volunteers, or act in any type of supervisory role in the program. The Corporation is seeking national organizations that are willing to actively promote senior service within their networks and that have the potential to view older volunteers as an important resource in accomplishing their own objectives. Foster Grandparent sponsors that are already funded by the Corporation are not eligible to receive a grant to expand into new geographic areas.

D. Award Process and Estimated Number of Awards

The Corporation will issue a letter of intent to provide funding to each approved applicant. The letter will instruct the national organization to work with the Corporation to identify the local affiliates that will serve as local project sites. The official awards will be made only after the Corporation is satisfied that the local sites are located in currently unserved geographic areas and that the local affiliates have the capacity to effectively implement the program. The Corporation anticipates making two awards to national organizations and approximately six awards to local affiliates of each national organization.

E. Scope of Grants

The amount of the grants for the national organizations will include funds to cover national coordination, networking and training and technical assistance. The amounts of the grants to the local affiliates will include funds to support approximately 56 Foster Grandparent Volunteer Service Years (V.S.). The amount of each local grant will include funds to cover: volunteer cost reimbursements including stipends of approximately $2,662 a year for each Volunteer Service Year (VSY), transportation, meals and insurance; and volunteer support costs including

project administration, staff and training and technical assistance. The average federal cost per Volunteer Service Year (VSY) is approximately $4,000 for standard volunteers and $4,600 for volunteer leaders.

Grant applicants should demonstrate their commitment to cost-sharing by offsetting part of the costs. This support can be achieved through cash or in-kind contributions.

Publication of this announcement does not obligate the Corporation to award any specific number of grants or to obligate the entire amount of funds available, or any part thereof, for grants under the FGP.

F. Period of Awards

Grants cover twelve months and may be renewed for up to twenty-four additional months contingent upon the continuing need for the projects, performance and the availability of appropriations.

G. Submission Requirements

To be considered for funding applicants must submit five copies of the following (with original signatures on items 1 and 2):

(1) An Application for Federal Assistance, Corporation Form 424–NSSC (OMB 3045–0035), Parts I through III;

(2) Signed Assurances (Corporation Form 424-B) and Certifications (Corporation Form 424E-G);

(3) Verification of status as a non-profit organization as described in Section 501 (c)(3) of the Internal Revenue Code;

(4) Most recent audit report.

H. General Selection Criteria

The Corporation will initially determine whether the organization is eligible and whether the application contains the information required in the application materials. All activities within a proposal should be coordinated through a well-developed national strategy and unified programmatically by a common theme and program elements, including training and technical assistance.

To ensure fairness to all applicants, the Corporation reserves the right to take action up to and including disqualification, in the event that a proposal fails to comply with any requirements specified in the application instructions. After this initial screening, the Corporation will assess applications based on the following criteria that will be further specified in the application instructions:

(1) The capacity of the applicant to effectively implement the FGP according to law, regulations and current Corporation policy, procedures, and priorities;

(2) The cost-effectiveness of the proposal; the applicant's ability to leverage significant additional resources from non-federal sources to support and sustain the project; and the extent to which the national organization can demonstrate the capacity of the local affiliates to continue the projects at the local level in subsequent years.

The Corporation will take into consideration the following factors after the proposals are assessed:

Geographic Location: The Corporation will assure that local projects include a mix of urban and rural sites.

Diversity: The Corporation will select organizations whose local projects have the capacity to recruit ethnic and racial minorities, males, and persons with disabilities.

I. Applicable Regulations

Regulations governing the Foster Grandparent Program are located in 45 CFR part 1208 (1997).

J. Program Authority

The Corporation's authority to make these grants is codified in 42 U.S.C. 5011.

Dated: April 10, 1998.

Thomas L. Bryant,

Associate General Counsel.

[FR Doc. 98–10020 Filed 4–14–98; 8:45 am]

BILLING CODE 6050–28–P

CORPORATION FOR NATIONAL AND COMMUNITY SERVICE

Availability of Funds for New Retired and Senior Volunteer Program (RSVP) Projects—Nationwide

AGENCY: Corporation for National and Community Service.

ACTION: Notice of Availability of Funds.

SUMMARY: The Corporation for National and Community Service (hereinafter the ''Corporation'') announces the availability of up to $625,000 to support approximately 1,200 RSVP volunteers in new RSVP projects in geographic areas that do not fall within approved service areas of current RSVP program sponsors. Approximately $300,000 will be made available to support each of two national organizations and three of their local affiliates. Each national organization will be expected to provide coordination, networking and training and technical assistance to its three local affiliates. The local affiliates will be expected to support a total of approximately 600 RSVP volunteers for each national organization. Awards will cover a twelve-month period and can be renewed for up to twenty-four additional months contingent upon the continuing need for the projects, performance and the availability of appropriations. This allows the Corporation to fund multi-state and multi-site projects that are national in scope and build on existing networks. The Corporation is seeking national organizations that are willing to actively promote senior service within their networks and that view older volunteers as an important resource in accomplishing their own objectives.

The RSVP provides service opportunities to adults age 55 and older, matching their skills, life experiences, and interests to priority needs in communities across the nation. Through this service, RSVP provides communities with valuable resources to meet their needs, enhances the lives of the volunteers and those whom they serve. The primary focus of volunteer activities for this twelve-month period must be on helping children learn to read and other literacy activities that support the goals of the America Reads Challenge.

DATES: Applications must be received by 5 p.m. Eastern Daylight Time, May 11, 1998.

ADDRESSES: Application instructions and kits are available from the Corporation for National and Community Service, National Senior Service Corps, 1201 New York Avenue, NW., Washington, DC 20525, (202) 606–5000, ext. 261, TDD (202) 565–2799, or TTY via the Federal Information Relay Service at 1–(800) 877–8339.

Applications should be submitted to the Corporation for National and Community Service, 1201 New York Avenue, NW., National Senior Service Corps, Mailstop 9310, Attn: Barbara Wilson, Washington, DC 20525. The Corporation will not accept applications that are submitted via facsimile or e-mail transmission.

SUPPLEMENTARY INFORMATION:

A. Background

The Corporation is a federal government corporation that encourages Americans of all ages and backgrounds to engage in community-based service. This service addresses the nation's educational, public safety, environmental, and other human needs to achieve direct and demonstrable results. In supporting service programs, the Corporation fosters civic responsibility, strengthens the ties that bind us together as a people, and provides educational opportunity for

those who make a substantial commitment to service.

The RSVP is authorized by the Domestic Volunteer Service Act of 1973, as amended. (See 42 U.S.C. 5001 *et seq.*). The RSVP provides service opportunities to adults age 55 and older, matching their skills, life experiences, and interests to priority needs in communities across the nation. Through this service, RSVP provides communities with valuable resources to meet their needs, enhances the lives of the volunteers and those whom they serve.

The RSVP was launched with 11 RSVP projects in 1971. Today there are over 450,000 RSVP volunteers serving almost 80 million hours annually through a myriad of local community organizations in over 1,500 communities. They volunteer in schools, libraries, hospitals, nursing homes, meals on wheels, senior centers, public housing, law enforcement agencies, parks, environmental organizations, and a wide range of community organizations. Through these organizations, they tutor youth, respond to natural disasters, serve as citizen patrols, teach parenting skills to teen parents, get children immunized, mentor troubled youth, plan community gardens, help other seniors complete income tax forms, serve as hospital aides, conduct groundwater protection surveys, provide in-home respite care with the frail elderly, teach computer classes at elementary schools, test buildings for radon, read to hospitalized children, manage grief counseling groups, set up block watch projects, bring meals to the terminally ill, test water for pollutants and track down their sources, drive the visually impaired to doctors appointments, provide a human touch to AIDS babies, and so much more.

B. Purpose of This Announcement

The Corporation is soliciting applications from national nonprofit organizations in order to fund multi-state and multi-site projects that are national in scope and build on existing networks of the national organizations. The Corporation is interested in expanding RSVP to serve new geographic locations currently unserved by the program. It is expected that the new projects, in the first year of operation, will focus on activities that support the goals of the America Reads Challenge.

The goal of the America Reads Challenge is to mobilize Americans from all walks of life to ensure that all children can read well and independently by the end of third grade. The America Reads Challenge is a comprehensive, nationwide effort to create in-school, after-school, weekend, and summer tutoring programs in reading. Working to support the efforts of teachers and parents, this initiative calls on all Americans, including college students, business leaders, and senior citizens, to work through schools, libraries, religious organizations, universities, community and national groups, and cultural organizations to ensure that every child can read independently by the end of third grade.

C. Eligible Applicants

National nonprofit organizations that operate in more than one state are eligible to apply. The Corporation defines a national nonprofit organization as one whose mission, membership and activities, or constituencies are national in scope. However, an organization described in section 501(c)(4) of the Internal Revenue Code of 1986, (26 U.S.C. 501 (c)(4)) that engages in lobbying activities is not eligible to apply, serve as a host site for volunteers, or act in any type of supervisory role in the program. The Corporation is seeking national organizations that are willing to actively promote senior service within their networks and that view older volunteers as an important resource in accomplishing their own objectives.

The local affiliates of the national organizations must have or develop strong partnerships with: (1) entities planning or operating city, county, statewide, or multi-state America Reads initiatives; (2) local governments planning or operating area-wide America Reads initiatives; (3) volunteer centers engaged in recruiting trained literacy tutors for the America Reads Challenge and, (4) university service-learning centers coordinating work-study and other college students for the America Reads Challenge.

RSVP sponsors that are currently funded by the Corporation are not eligible to receive a grant to expand into new geographic areas.

D. Award Process and Estimated Number of Awards

The Corporation will issue a letter of intent to provide funding to each approved applicant. This letter will instruct the national organization to work with the Corporation to identify the local affiliates that will serve as local project sites. The official awards will be made only after the Corporation is satisfied that the local sites are located in currently unserved geographic areas and that the local affiliates have the capacity to effectively implement the program.

The Corporation anticipates making two awards to national organizations, and approximately three awards to local affiliates of each national organization.

E. Scope of Grants

The amount of the grants for the national organizations will include funds to cover national coordination, networking and training and technical assistance. The amounts of the grants to the local affiliates will include funds to cover: Volunteer travel reimbursement; insurance costs; incentives including monetary stipends of up to $150 a month for Volunteer Leaders; and volunteer support costs including project administration, staff and training and technical assistance. The average federal cost is $300 per volunteer a year and $2,100 a year for each Volunteer Leader.

Grant applicants should demonstrate their commitment to cost-sharing by offsetting part of the costs. This support can be achieved through cash or in-kind contributions.

Publication of this announcement does not obligate the Corporation to award any specific number of grants or to obligate the entire amount of funds available, or any part thereof, for grants under the RSVP Program.

F. Period of Awards

Grants cover twelve months and may be renewed for up to twenty-four additional months contingent upon the continuing need for the projects, performance and the availability of appropriations.

G. Submission Requirements

To be considered for funding, applicants must submit five copies of the following (with original signatures on items 1 and 2):

(1) An Application for Federal Assistance, Corporation Form 424–NSSC (OMB 3045–0035), Parts I through III;

(2) Signed Assurances (424–B) and Certifications (424E–G);

(3) Verification of status as a non-profit organization as described in Section 501(c)(3) of the Internal Revenue Code; and

(4) Most recent audit report.

H. General Selection Criteria

The Corporation will initially determine whether the organization is eligible and whether the application contains the information required in the application materials. All activities within a proposal should be coordinated through a well-developed national

strategy and unified programmatically by a common theme and program elements, including training and technical assistance.

To ensure fairness to all applicants, the Corporation reserves the right to take action up to and including disqualification, in the event that a proposal fails to comply with any requirements specified in the application instructions. After this initial screening, the Corporation will assess applications based on the following criteria that will be further specified in the application instructions:

(1) The capacity of the applicant to effectively implement RSVP according to law, regulations and current Corporation policy, procedures, and priorities.

(2) The cost-effectiveness of the proposal; the applicant's ability to leverage significant additional resources from non-federal sources to support and sustain the project; and the extent to which the national organization can demonstrate that local projects have the capacity to continue in subsequent years.

The Corporation will take into consideration the following factors after the proposals are assessed:

Geographic Location: The Corporation will assure that local projects include a mix of urban and rural sites.

Diversity: The Corporation will select organizations whose local projects have the capacity to recruit ethnic and racial minorities, males and persons with disabilities.

I. Applicable Regulations

Regulations governing the RSVP Program are located in 45 CFR part 1209 (1997).

J. Program Authority

The Corporation's authority to make these grants is codified in 42 U.S.C. 5001.

Dated: April 10, 1998.

Thomas L. Bryant,

Associate General Counsel.

[FR Doc. 98–10021 Filed 4–14–98; 8:45 am]

BILLING CODE 6050–28–P

CORPORATION FOR NATIONAL AND COMMUNITY SERVICE

Availability of Funds for New Senior Companion Projects—Nationwide

AGENCY: Corporation for National and Community Service.

ACTION: Notice of availability of funds.

SUMMARY: The Corporation for National and Community Service (''Corporation'') announces the availability of up to $1,000,000 to support one national organization and five of its local affiliates to operate new Senior Companion Projects. The local projects must be located in geographic areas that do not fall within approved geographic service areas of current Senior Companion program sponsors or urban areas or large counties where the project serves only part of the city or county. The national organization will be expected to provide coordination, networking and training and technical assistance to its five local affiliates who combined will support a total of 225 Senior Companions. Awards will cover a twelve-month period and can be renewed for up to twenty-four additional months contingent upon the continuing need for the projects, performance and the availability of appropriations. This allows the Corporation to fund multi-state and multi-site projects that are national in scope and build on existing networks. The Corporation is seeking a national organization that is willing to actively promote senior service within its network and that have the potential to view older volunteers as an important resource in accomplishing its own objectives.

The Senior Companion Program (SCP) provides opportunities for income eligible individuals 60 years of age and over to serve frail adults on a person to person basis. The SCP provides essential services that enable frail adults to continue to live in their own homes, while also enhancing the lives of the volunteers and those whom they serve.

DATES: Applications must be received by 5 p.m. Eastern Daylight Time, May 11, 1998.

ADDRESSES: Application instructions and kits are available from the Corporation for National and Community Service, National Senior Service Corps, 1201 New York Avenue, NW., Washington, DC 20525, (202) 606–5000, ext. 261, TDD (202) 565–2799, or TTY via the Federal Information Relay Service at 1–(800) 877–8339.

Applications should be submitted to the Corporation for National and Community Service, National Senior Service Corps, 1201 New York Avenue, NW., Mailstop 9310, Attn: Barbara Wilson, Washington, DC 20525. The Corporation will not accept applications that are submitted via facsimile or e-mail transmission.

SUPPLEMENTARY INFORMATION:

A. Background

The Corporation is a federal government corporation that encourages Americans of all ages and backgrounds to engage in community-based service. This service addresses the nation's educational, public safety, environmental, and other human needs to achieve direct and demonstrable results. In supporting service programs, the Corporation fosters civic responsibility, strengthens the ties that bind us together as a people, and provides educational opportunity for those who make a substantial commitment to service.

The SCP is authorized by the Domestic Volunteer Service Act of 1973, as amended. (See 42 U.S.C. 5013 *et seq.*) The SCP is one of three programs that comprise the National Senior Service Corps. All three Senior Corps programs are based on the premise that seniors are valuable resources, can be mobilized to help meet priority community needs, and through their skills and talents can have an impact on national problems of local concern.

The SCP was launched in 1974 with its first 11 projects. Today there are over 13,000 Senior Companions serving 48,000 frail adults annually. These Senior Companions provide high quality and reliable personal support to adults, primarily frail elderly, experiencing difficulties with activities of daily living, allowing them to live independently in their own homes for as long as possible. SCP focuses on those with moderate physical, mental or emotional impairments who are without adequate family support and who in the absence of non-medical support services would be at risk of institutionalization. Senior Companions also assist clients in patient discharge programs at acute care, mental health, and long-term care facilities to make the transition to living in less restrictive community settings, and some Senior Companions provide short-term respite for primary care givers of frail adults in times of special need.

B. Purpose of This Announcement

The Corporation is soliciting applications from national nonprofit organizations in order to fund multi-state and multi-site projects that are national in scope and build on existing networks of the national organizations. The Corporation is interested in expanding the Senior Companion Program to serve new geographic locations currently unserved by the program. The Corporation is interested in focusing on in-home assignments for older persons most in need and respite for family care givers.

Many older adults experience problems in one or more routine activities of daily living (ADLs) which

makes them homebound. With the support of a caring adult, many of these individuals are able to remain at home. This in-home support often makes the difference between living independently at home and premature placement into a long-term care facility, especially when immediate family members are not present to provide support.

It is essential that project activities strive to result in improvements that otherwise would not occur. While multiple benefits may be realized through these projects, the primary outcome objectives should be focused on:

(a) Reducing the gap between available services and the need for services among the frail elderly in need of independent living support. Depending upon the specific needs identified within a community, this might involve increasing the number of persons who receive services, increasing the amount of service available to current service recipients, or adding types of services that are needed but not currently available within the community; and

(b) Increasing the efficiency of service delivery by making use of the diverse talents of volunteers. This might involve freeing professional and paraprofessional care givers from routine tasks, improving coordination of services, or improving the appropriateness of the level and type of service delivered.

Activities should complement services being provided by medical professionals and para-professionals and others who are also providing services to the older person.

C. Eligible Applicants

National nonprofit organizations that operate in more than one state are eligible to apply. The Corporation defines a national nonprofit organization as one whose mission, membership and activities, or constituencies are national in scope. However, an organization described in section 501(c)(4) of the Internal Revenue Code of 1986, (26 U.S.C. 501(c)(4)) that engages in lobbying activities is not eligible to apply, serve as a host site for volunteers, or act in any type of supervisory role in the program. The Corporation is seeking a national organization that is willing to actively promote senior service within its networks and that views older volunteers as an important resource in accomplishing its own objectives.

All activities within a proposal should be coordinated through a well-developed national strategy and unified programmatically by a common theme and program elements, including training and technical assistance. In designing a program, an applicant should consider its national, regional and local capacities.

The local affiliates of the national organizations must have or develop strong partnerships with the aging network; hospitals and other health care providers; care giver coalitions and agencies; volunteer, church and civic groups that provide in-home and respite services; businesses and community members; and collaborations with RSVP, Learn and Serve America and/or AmeriCorps.

D. Award Process and Estimated Number of Awards

The Corporation will issue a letter of intent to provide funding to the approved applicant. This letter will instruct the national organization to work with the Corporation to identify the local affiliates that will serve as local project sites. The official awards will be made only after the Corporation is satisfied that the local sites are located in currently unserved geographic areas and that the local affiliates have the capacity to effectively implement the program.

The Corporation anticipates making one award to a national organization and approximately five awards to local affiliates of the national organization.

E. Scope of Grant

The amount of the grant for the national organization will include funds to cover national coordination, networking, training and technical assistance. The amount of the grants to the local affiliates will include funds to support approximately 45 Senior Companion Volunteer Service Years (VSYs.). The amount of each local grant will include funds to cover: volunteer cost reimbursements including stipends of approximately $2,662 a year for each Volunteer Service Year (VSY), transportation, meals and insurance; and volunteer support costs including project administration, staff and training and technical assistance. The average Federal Cost per Volunteer Service Year (VSY) is approximately $4,000 for standard volunteers and $4,600 for volunteer leaders.

Grant applicants should demonstrate their commitment to cost-sharing by offsetting part of the costs. This support can be achieved through cash or in-kind contributions.

Publication of this announcement does not obligate the Corporation to award any specific number of grants or to obligate the entire amount of funds available, or any part thereof, for grants under the Senior Companion Program.

F. Period of Awards

Grants cover twelve months and may be renewed for up to twenty-four additional months contingent upon the continuing need for the projects, performance and the availability of appropriations.

G. Submission Requirements

To be considered for funding, applicants must submit five copies of the following (with original signatures on items 1 and 2):

(1) An Application for Federal Assistance, Corporation Form 424–NSSC (OMB 3045–0035), Parts I through III;

(2) Signed Assurances (424–B) and Certifications (424E–G);

(3) Verification of status as a non-profit organization as described in Section 501(c)(3) of the Internal Revenue Code; and

(4) Most recent audit report.

H. General Selection Criteria

The Corporation will initially determine whether the organization is eligible and whether the application contains the information required in the application materials. All activities within the proposal should be coordinated through a well-developed national strategy and unified programmatically by a common theme and program elements, including training and technical assistance.

To ensure fairness to all applicants, the Corporation reserves the right to take action up to and including disqualification, in the event that a proposal fails to comply with any requirements specified in the application instructions. After this initial screening, the Corporation will assess applications based on the following criteria that will be further specified in the application instructions:

(1) The capacity of the applicant to effectively implement the Senior Companion Program according to law, regulations and current Corporation policy, procedures, and priorities.

(2) The cost-effectiveness of the proposal; the applicant's ability to leverage significant additional resources from non-federal sources to support and sustain the project; the extent to which the national organization can demonstrate the capacity to continue the projects at the local level in subsequent years.

The Corporation will take into consideration the following factors after the proposals are assessed:

Geographic Location: The Corporation will assure a mix of urban and rural sites.

Diversity: The Corporation will select organizations whose local projects have the capacity to recruit ethnic and racial minorities, males and persons with disabilities.

I. Applicable Regulations

Regulations governing the Senior Companion Program are located in 45 C.F.R. Part 1207 (1997).

J. Program Authority

The Corporation's authority to make these grants is codified in 42 U.S.C. 5013.

Dated: April 10, 1998.

Thomas L. Bryant,

Associate General Counsel.

[FR Doc. 98–10019 Filed 4–14–98; 8:45 am]

BILLING CODE 6050–28–P

DEPARTMENT OF DEFENSE

[OMB Control Number 0704–0336]

Information Collection Requirements; Drug-Free Work Force

AGENCY: Department of Defense (DoD).

ACTION: Notice and request for comments regarding a proposed extension of an approved information collection requirement.

SUMMARY: In compliance with Section 3506(c)(2)(A) of the Paperwork Reduction Act of 1995 (44 U.S.C. Chapter 35), DoD announces the proposed extension of a public information collection requirement and seeks public comment on the provisions thereof. Comments are invited on: (a) whether the proposed collection of information is necessary for the proper performance of the functions of the agency, including whether the information will have practical utility; (b) the accuracy of the estimate of the burden of the proposed information collection; (c) ways to enhance the quality, utility, and clarity of the information to be collected; and (d) ways to minimize the burden of the information collection on respondents, including the use of automated collection techniques or other forms of information technology. This information collection requirement is currently approved by the Office of Management and Budget (OMB) for use through September 30, 1998. DoD proposes that OMB extend its approval for use through September 30, 2001.

DATES: Consideration will be given to all comments received by June 15, 1998.

ADDRESSES: Written comments and recommendations on the proposed information collection requirement should be sent to: Defense Acquisition Regulations Council, Attn: Mr. Michael Pelkey, PDUSD (A&T) DP (DAR), IMD 3D139, 3062 Defense Pentagon, Washington, DC 20301–3062. Telefax (703) 602–0350. Please cite OMB Control Number 0704–0336 in all correspondence related to this issue. Comments may also be provided electronically by e-mailing the comments to dfars@acq.osd.mil. Please include OMB Control Number 0704–0336 in the subject line of the e-mail.

FOR FURTHER INFORMATION CONTACT:

Mr. Michael Pelkey, at (703) 602–0131. A copy of this information collection requirement is available electronically via the Internet at: http://www.dtic.mil/dfars/.

Paper copies may be obtained from Mr. Michael Pelkey, PDUSD (A&T) DP (DAR), IMD 3D139, 3062 Defense Pentagon, Washington, DC 20301–3062.

SUPPLEMENTARY INFORMATION:

Title, Associated Form, and OMB Number: Defense Federal Acquisition Regulation Supplement (DFARS) Section 223.570, Drug-free work force, and the associated clause at DFARS 252.223–7004; no form is used for this information collection; OMB Number 0704–0336.

Needs and Uses: This requirement provides that DoD contractors shall maintain records regarding drug-free work force programs provided to contractor employees. The information is used to ensure reasonable efforts to eliminate the unlawful use of controlled substances by contractor employees.

Affected Public: Businesses or other for-profit and not-for-profit institutions.

Annual Burden Hours: 930,432 hours.

Number of Respondents: 13,964.

Number of Responses: 0.

Responses Per Respondent: 0.

Average Burden Per Response: 0.

Frequency: This is a requirement for recordkeeping only.

Summary of Information Collection

DFARS Section 223.570, Drug-free work force, and the associated clause at DFARS 252.223–7004 require that DoD contractors institute and maintain programs for achieving the objective of a drug-free work force. No submission of information to the Government is required. This request to extend the OMB approval of an information collection reflects the public burden of maintaining records related to such programs.

Michele P. Peterson,

Executive Editor, Defense Acquisition Regulations Council.

[FR Doc. 98–9963 Filed 4–14–98; 8:45 am]

BILLING CODE 5000–04–M

DEPARTMENT OF DEFENSE

Department of the Navy

Availability of Government Owned Inventions for Licensing

AGENCY: Department of the Navy, DoD.

ACTION: Notice of Availability of Government Owned Inventions for Licensing.

SUMMARY: The inventions listed below are assigned to the United States Government as represented by the Secretary of the Navy and are made available for licensing by the Department of the Navy.

Copies of patents cited are available from the Commissioner of Patents and Trademarks, Washington, D.C. 20231, for $3.00 each. Requests for copies of patents must include the patent number.

Copies of patent applications cited are available from the National Technical Information Service (NTIS), Springfield, Virginia 22161 for $6.95 each ($10.95 outside North American Continent). Requests for copies of patent applications must include the patent application serial number. Claims are deleted from the copies of patent applications sold to avoid premature disclosure.

The following patents and patent applications are available for licensing:

Patent 5,638,076: AUTOMATIC RANGE REDUCING GATING SYSTEM; filed 29 September 1966; patented 10 June 1997.

Patent 5,641,691: METHOD FOR FABRICATING COMPLEMENTARY VERTICAL BIPOLAR JUNCTION TRANSISTORS IN SILICON-ON-SAPPHIRE; filed 3 April 1995; patented 24 June 1997.

Patent 5,642,451: FIBEROPTIC CABLE JUNCTION; filed 28 December 1995; patented 24 June 1997.

Patent 5,642,868: CERAMIC MATERIAL; filed 2 May 1990; patented 1 July 1997.

Patent 5,644,664: FIBER OPTIC DIGITAL TRANSMISSION SYSTEM; filed 6 June 1995; patented 1 July 1997.

Patent 5,645,006: BLADDER ASSEMBLY FOR RETAINING FLUID UNDER PRESSURE; filed 17 January 1996; patented 8 July 1997.

Patent 5,646,366: UNDERWATER DEFENSE SYSTEM; filed 22 August 1996; patented 8 July 1997.
Patent 5,646,400: CORROSION DETECTING AND MONITORING METHOD AND APPARATUS; filed 14 July 1995; patented 8 July 1997.
Patent 5,646,855: WAYPOINT NAVIGATION USING EXCLUSION ZONES; filed 19 July 1995; patented 8 July 1997.
Patent 5,646,907: METHOD AND SYSTEM FOR DETECTING OBJECTS AT OR BELOW THE WATER'S SURFACE; filed 9 August 1995; patented 8 July 1997.
Patent 5,647,265: TOOL AND SYSTEM FOR MACHINING A ROUND STRAND; filed 30 June 1993; patented 15 July 1997.
Patent 5,648,201: EFFICIENT CHEMISTRY FOR SELECTIVE MODIFICATION AND METALLIZATION OF SUBSTRATES; filed 16 December 1992; patented 15 July 1997.
Patent 5,648,631: SPOOLED TAPE-SEAL FOR UNDERWATER GUN OPERATION; filed 3 October 1995; patented 15 July 1997.
Patent 5,648,914: METHOD OF DEFENDING AGAINST CHEMICAL AND BIOLOGICAL MUNITIONS; filed 30 June 1992; patented 15 July 1997.
Patent 5,648,940: PULSE CODED SONAR HAVING IMPROVED DOPPLER DETERMINATION FEATURE; filed 23 January 1968; patented 15 July 1997.
Patent 5,649,488: NON-EXPLOSIVE TARGET DIRECTED REENTRY PROJECTILE; filed 19 May 1995; patented 22 July 1997.
Patent 5,649,811: COMBINATION MOTOR AND PUMP ASSEMBLY; filed 6 March 1996; patented 22 July 1997.
Patent 5,651,019: SOLID-STATE BLUE LASER SOURCE; filed 28 April 1995; patented 22 July 1997.
Patent 5,651,529: REDUCED NOISE DISK VALVE ASSEMBLY; filed 28 April 1996; patented 29 July 1997.
Patent 5,651,976: CONTROLLED RELEASE OF ACTIVE AGENTS USING INORGANIC TUBULES; filed 31 July 1995; patented 29 July 1997.
Patent 5,652,027: ROBUST, NONTOXIC, ANTIFOULING POLYMER; filed 23 February 1996; patented 29 July 1997.
Patent 5,652,409: BISMUTH AND COPPER BALLISTIC MODIFIERS FOR DOUBLE BASE PROPELLANTS; filed 23 February 1996; patented 29 July 1997.
Patent 5,652,431: IN-SITU MONITORING AND FEEDBACK CONTROL OF METALORGANIC PRECURSOR DELIVERY; filed 6 October 1995; patented 29 July 1997.
Patent 5,652,819: METHOD FOR TUNING FIBER OPTIC COUPLERS AND MULTIPLEXES; filed 9 August 1995; patented 29 July 1997.
Patent 5,652,839: METHOD OF NON-INTRUSIVELY SENSING STATUS IN A COMPUTER PERIPHERAL; filed 29 March 1994; patented 29 July 1997.
Patent 5,654,044: DIAMOND FILM DEPOSITION ON GRAPHITE; filed 29 August 1995; patented 5 August 1997.
Patent 5,654,558: INTERBAND LATERAL RESONANT TUNNELING TRANSISTOR; filed 14 November 1994; patented 5 August 1997.
Patent 5,654,698: MISSILE TELEMETRY DATA INTERFACE CIRCUIT; filed 8 April 1996; patented 5 August 1997.
Patent 5,654,937: ACOUSTIC ELEMENT TESTER FOR AN ARRAY OF HYDROPHONES; filed 22 March 1996; patented 5 August 1997.
Patent 5,655,137: METHOD AND APPARATUS FOR PRE-PROCESSING INPUTS TO PARALLEL ARCHITECTURE COMPUTERS; filed 23 March 1995; patented 5 August 1997.
Patent 5,657,017: TELEMETRY BI-PHASE-LEVEL TO NON-RETURN-TO-ZERO-LEVEL SIGNAL CONVERTER; filed 1 December 1995; patented 12 August 1997.
Patent 5,657,296: ACOUSTIC RECEIVER ASSEMBLY; filed 14 May 1996; patented 12 August 1997.
Patent 5,657,546: SPOTTING ROUND BORE ALIGNMENT MECHANISM FOR ROCKET LAUNCHER; filed 14 August 1995; patented 19 August 1997.
Patent 5,659,779: SYSTEM FOR ASSIGNING COMPUTER RESOURCES TO CONTROL MULTIPLE COMPUTER DIRECTED DEVICES; filed 25 April 1994; patented 19 August 1997.
Patent 5,659,965: COMBINATION OPTICAL AND IRON SIGHT SYSTEM FOR ROCKET LAUNCHER; filed 14 August 1995; patented 26 August 1997.
Patent 5,659,993: COMBINATION PIN FOR ATTACHING TRIGGER ASSEMBLY AND SAFING SMALL ARM; filed 14 August 1995; patented 26 August 1997.
Patent 5,660.135: UNDERWATER APPARATUS RELEASE MECHANISM; filed 18 November 1996; patented 26 August 1997.
Patent 5,660,348: COMPUTER CONTROLLED FILAMENT WINDING SYSTEM HAVING TENSIONING DEVICE; filed 19 September 1995; patented 26 August 1997.
Patent 5,661,258: AIR-DELIVERED ORDNANCE EXPLOSIVE MINE AND OBSTACLE CLEARANCE METHOD; filed 25 January 1996; patented 26 August 1997.
Patent 5,661,259: VARIABLE SHAPE CONTROL FIN ASSEMBLY FOR WATER VEHICLES; filed 22 April 1996; patented 26 August 1997.
Patent 5,661,260: FIN ASSEMBLY FOR A VEHICLE; filed 1 May 1996; patented 26 August 1997.
Patent 5,661,313: ELECTROLUMINESCENT DEVICE IN SILICON ON SAPPHIRE; filed 8 March 1996; patented 26 August 1997.
Patent 5,661,583: FIBER OPTICAL DATA INTERFACE SYSTEM; filed 25 October 1995; patented 26 August 1997.
Patent 5,661,666: CONSTANT FALSE PROBABILITY DATA FUSION SYSTEM; filed 6 November 1992; patented 26 August 1997.
Patent 5,662,161: BREATHING GAS COOLING AND HEATING DEVICE; filed 10 August 1995; patented 2 September 1997.
Patent 5,663,927: BUOYED SENSOR ARRAY COMMUNICATIONS SYSTEM; filed 23 May 1996; patented 2 September 1997.
Patent 5,663,986: APPARATUS AND METHOD OF TRANSMITTING DATA OVER A COAXIAL CABLE IN A NOISY ENVIRONMENT; filed 25 March 1996; patented 2 September 1997.
Patent 5,664,742: PLUME AVOIDANCE MANEUVERS; filed 31 July 1989; patented 9 September 1997.
Patent 5,664,897: RELEASABLE CONNECTOR WITH SEVERABLE LINE; filed 29 August 1996; patented 9 September 1997.
Patent 5,666,047: DIELECTRIC TRANSFORMER; filed 5 October 1995; patented 9 September 1997.
Patent 5,666,108: TELEMETRY DATA SELECTOR METHOD; filed 20 September 1991; patented 9 September 1997.
Patent 5,666,117: NON-RETURN TO ZERO LEVEL TO BI-PHASE SIGNAL CONVERTER; filed 31 August 1995; patented 9 September 1997.
Patent 5,666,327: PORTABLE ACOUSTIC TURBULENCE DETECTOR; filed 2 February 1996; patented 9 September 1997.
Patent 5,667,627: HAND HELD VACUUM HEAT SEALER APPARATUS; filed 15 August 1995; patented 16 September 1997.
Patent 5,668,240: ENERGETIC NITRO POLYMER; filed 26 August 1996; patented 16 September 1997.
Patent 5,668,241: ENERGETIC FLOURONITRO POLYMER; filed 26 August 1996; patented 16 September 1997.

Patent 5,668,653: HIGH-SPEED SWITCH FOR FAST ROUTING OF DATA PACKETS; filed 19 July 1995; patented 16 September 1997.
Patent 5,668,778: METHOD FOR DETECTING ACOUSTIC SIGNALS FROM AN UNDERWATER SOURCE; filed 9 July 1996; patented 16 September 1997.
Patent 5,669,560: NON-PULPABLES COLLECTION CHAMBER WITH REMOVABLE BASKET FOR SOLID WASTE PULPERS; filed 8 May 1996; patented 23 September 1997.
Patent 5,669,776: CABLE CONNECTOR ASSEMBLY; filed 11 September 1996; patented 23 September 1997.
Patent 5,670,233: ACOUSTIC WINDOW AND METHOD FOR MAKING THE SAME; filed 29 June 1995; patented 23 September 1997.
Patent 5,670,942: ILLUMINATION AND COMMUNICATION DEVICE; filed 13 December 1994; patented 23 September 1997.
Patent 5,671,138: FUZZY CONTROLLER FOR ACOUSTIC VEHICLE TARGET INTERCEPT GUIDANCE; filed 6 July 1995; patented 23 September 1997.
Patent 5,671,139: HIERARCHICAL FUZZY CONTROLLER FOR BEAM RIDER GUIDANCE; filed 6 July 1995; patented 23 September 1997.
Patent 5,671,140: FUZZY CONTROLLER FOR TARGET INTERCEPT GUIDANCE; filed 6 July 1995; patented 23 September 1997.
Patent 5,671,294: SYSTEM AND METHOD FOR INCORPORATING SEGMENTATION BOUNDARIES INTO THE CALCULATION OF FRACTAL DIMENSION FEATURES FOR TEXTURE DISCRIMINATION; filed 15 September 1994; patented 23 September 1997.
Patent 5,671,722: PROJECTILE LAUNCHER; filed 29 May 1996; patented 30 September 1997.
Patent 5,671,825: SHIELDED BEARING LUBRICATION; filed 19 November 1996; patented 30 September 1997.
Patent 5,672,228: VIBRATION-DAMPING OF STRUCTURAL PRODUCTS; filed 19 September 1995; patented 30 September 1997.
Patent 5,680,210: INTERFEROMETRIC TARGET DETECTING APPARATUS HAVING A LIGHT SOURCE WITH MORE LORENTZIAN THAN GAUSSIAN SPECTRAL COMPONENTS; filed 5 January 1996; patented 21 October 1997.
Patent 5,686,686: HAND EMPLACED UNDERWATER MINE PENETRATION SYSTEM; filed 25 January 1996; patented 11 November 1997.
Patent application 08/605,816: BALLISTIC MODIFIERS FOR PROPELLANTS; filed 23 February 1996.
Patent application 08/613,744: SELECTIVELY CONTROLLED ELECTRICAL POWER SWITCHING SYSTEM; filed 22 February 1996.
Patent application 08/622,174: INSENSITIVE BINARY EXPLOSIVE; filed 28 February 1996.
Patent application 08/625,506: ATMOSPHERIC OZONE CONCENTRATION DETECTOR; filed 29 March 1996.
Patent application 08/627,199: TERBIUM-DYSPROSIUM-ZINC AND TERBIUM-GADOLINIUM-ZINC MAGNETOSTRICTIVE MATERIALS AND DEVICES; filed 3 April 1996.
Patent application 08/682,902: INPUT/OUTPUT MODULE FOR A TESTER SYSTEM; filed 24 June 1996.
Patent application 08/695,912: METHOD AND SYSTEM FOR MEASURING SURFACE ROUGHNESS; filed 12 August 1996.
Patent application 08/696,083: INITIATOR POSITIONING TOOL; filed 13 August 1996.
Patent application 08/700,573: DIRECTIONALLY SENSITIVE POINTING MICROPHONE; filed 7 August 1996.
Patent application 08/700,750: INTEGRATED ELECTRICAL POWER SUPPLY SYSTEM FOR PROPULSION AND SERVICE CONTROL; filed 16 August 1996.
Patent application 08/721,307: SINGLE FUZE FOLLOW-THROUGH GRENADE; filed 30 September 1996.
Patent application 08/758,044: HYDROPHONE FOR DETERMINING DIRECTION OF UNDERWATER SOUND; filed 27 November 1996.
Patent application 08/772,054: PORTABLE LAUNCHER; filed 5 December 1996.
Patent application 08/788,569: SHOULDER-LAUNCHED MULTIPLE-PURPOSE ASSAULT WEAPON; filed 24 January 1997.
Patent application 08/788,631: BISTABLE PHOTOCONDUCTIVE SWITCHES PARTICULARLY SUITED FOR FREQUENCY-AGILE RADIO-FREQUENCY SOURCES; filed 24 January 1997.
Patent application 08/807,128: SUPPRESSING CAVITATION IN A HYDRAULIC COMPONENT; filed 26 February 1997.
Patent application 08/810,168: SYSTEM AND METHOD FOR HIGH RESOLUTION RANGE IMAGING WITH SLIT LIGHT SOURCE AND PATTERN MASK; filed 28 February 1997.
Patent application 08/812,099: COOLING WITH THE USE OF A CAVITATING FLUID FLOW; filed 26 February 1997.
Patent application 08/814,064: PHASE DETECTION USING NEURAL NETWORKS; filed 10 March 1997.
Patent application 08/818,204: INFRARED TRANSPARENT SELENIDE GLASSES: filed 14 March 1997.
Patent application 08/818,686: NOVEL LINEAR METALLOCENE POLYMERS CONTAINING ACETYLENIC AND INORGANIC UNITS AND THERMOSETS AND CERAMICS THEREFROM; filed 18 March 1997.
Patent application 08/822,138: APPARATUS AND METHOD FOR PERFORMING NMR SPECTROSCOPY ON SOLID SAMPLE; filed 17 March 1997.
Patent application 08/823,950: OPTICAL FILTERS BASED ON UNIFORM ARRAYS OF METALLIC WAVEGUIDES; filed 8 April 1997.
Patent application 08/827,517: METHOD AND APPARATUS FOR GENERATING HIGH-DENSITY SHEET PLASMA MIRRORS USING A SLOTTED-TUBE-CATHODE CONFIGURATION; filed 28 March 1997.
Patent application 08/827,518: ELECTRO-OPTICAL BROADBAND MICROWAVE FREQUENCY SHIFTER; filed 28 March 1997.
Patent application 08/831,282: IN SITU-FORMED DEBOND LAYER FOR FIBERS; filed 31 March 1997.
Patent application 08/833,482: WAVELET PROJECTION TRANSFORM FEATURES APPLIED TO REAL TIME PATTERN RECOGNITION; filed 7 April 1997.
Patent application 08/834,723: DEFORMABLE PROPELLER BLADE AND SHROUD; filed 1 April 1997.
Patent application 08/840,112: AMPLIFICATION OF SIGNALS FROM HIGH IMPEDANCE SOURCES; filed 24 March 1997.
Patent application 08/841,957: FORMATION OF NANOCRYSTALLINE SEMICONDUCTOR PARTICLES WITHIN A BICONTINUOUS CUBIC PHASE; filed 8 April 1997.
Patent application 08/841,966: CHEMICALLY SPECIFIC PATTERNING ON SOLID SURFACES USING SURFACE IMMOBILIZED ENZYMES; filed 8 April 1997.
Patent application 08/843,809: INSERT FOR AN OPENING IN A COMPOSITE MATERIAL PRESSURE VESSEL; filed 21 April 1997.
Patent application 08/845,848: TEST SPECIMEN DESIGN

INCORPORATING MULTIPLE FRACTURE SITES AND MULTIPLE STRAIN STATE MATERIAL FRACTURES; filed 28 April 1997.

Patent application 08/848,259: OPTICALLY TRANSPARENT, OPTICALLY STIMULABLE GLASS COMPOSITES FOR RADIATION DOSIMETRY; filed 29 April 1997.

Patent application 08/848,623: NARROW BAND LASER SPECKLE SUPPRESSION; filed 29 April 1997.

Patent application 08/851,795: SHIP WAKE SIGNATURE SUPPRESSION; filed 6 May 1997.

Patent application 08/854,511: SIGMA-DELTA MODULATOR FOR WIDE BANDWIDTH APPLICATIONS; filed 12 May 1997.

Patent application 08/856,700: METHODS AND MATERIALS FOR MAGNETIC RECORDING WHILE AVOIDING THE SUPERPARAMAGNETIC LIMIT; filed 15 May 1997.

Patent application 08/859,334: INTERFEROMETRIC FIBER OPTIC DOPPLER VELOCIMETER WITH HIGH DYNAMIC RANGE; filed 20 May 1997.

Patent application 08/865,150: FIELD CALIBRATION OF THE NORMAL PRESSURE TRANSFER FUNCTION OF A COMPLIANT FLUID-FILLED CYLINDER; filed 29 May 1997.

Patent application 08/865,151: METHOD AND APPARATUS FOR FREQUENCY FILTERING USING AN ELASTIC, FLUID-FILLED CYLINDER; filed 29 May 1997.

Patent application 08/869,320: APPARATUS FOR CONTACTLESS MEASUREMENT OF THE ELECTRICAL RESISTANCE OF A CONDUCTOR; filed 3 June 1997.

Patent application 08/869,724: INSENSITIVE BINARY EXPLOSIVE; filed 15 June 1997.

Patent application 08/870,263: OPTIMIZING THE COMPRESSIONAL WAVE ENERGY RESPONSE OF AN ELASTIC FLUID-FILLED CYLINDER; filed 29 May 1997.

Patent application 08/876,659: METHOD OF SUPPLYING MULTIPLE LOADS FROM MULTIPLE SOURCES OVER AN INTERCONNECTED NETWORK OF DEFINED PATHS; filed 19 June 1997.

Patent application 08/882,001: MUZZLE BRAKE FOR AN UNDERWATER GUN; filed 19 May 1997.

Patent application 08/884,606: DEVICE FOR EXTRACTING AN INSERT FROM A CONNECTOR ASSEMBLY; filed 30 June 1997.

Patent application 08/885,668: METAL-COATED IR-TRANSMITTING CHALCOGENIDE GLASS FIBERS; filed 30 June 1997.

Patent application 08/888,383: PROCESS AND MATERIAL FOR WARHEAD CASINGS; filed 7 July 1997.

Patent application 08/903,242: THREE-DIMENSIONAL VOLUME SELECTION TOOL; filed 24 July 1997.

Patent application 08/903,250: METHOD AND APPARATUS FOR INFRARED DETECTION OF A MOVING TARGET IN THE PRESENCE OF SOLAR CLUTTER; filed 31 July 1997.

Patent application 08/903,330: SYSTEM FOR POSITIONING BORESIGHT CALIBRATION TOOLS; filed 29 July 1997.

Patent application 08/903,359: TRANSDUCING COMPOSITE OF SINTERED PIEZOELECTRIC CERAMIC GRANULES IN A POLYMER MATRIX; filed 30 July 1997.

Patent application 08/914,018: PERFORMANCE ORIENTED SHIPPING CONTAINER; filed 11 August 1997.

Patent application 08/920,289: SPINNING FOCAL PLANE ARRAY CAMERA PARTICULARLY SUITED FOR REAL TIME PATTERN RECOGNITION; filed 26 August 1997.

Patent application 08/934,012: NOISE CODING PROCESSOR; filed 25 August 1997.

Patent application 08/940,179: ELECTRICAL POWER DEVICES COOLING TECHNIQUE; filed 30 September 1997.

Patent application 08/940,734: HIGH TEMPERATURE SHAPE MEMORY EFFECT IN RUTHENIUM ALLOYS; filed 10 September 1997.

Patent application 08/941,667: UNIVERSAL CLIENT DEVICE PERMITTING A COMPUTER TO RECEIVE AND DISPLAY INFORMATION FROM SEVERAL SPECIAL APPLICATIONS SIMULTANEOUSLY; filed 30 September 1997.

FOR FURTHER INFORMATION CONTACT: Mr. R.J. Erickson, Staff Patent Attorney, Office of Naval Research (Code OOCC), Arlington, VA 22217–5660, telephone (703) 696–4001.

(Authority: 35 U.S.C. 207; 37 CFR Part 404)

Dated: April 6, 1998.

Lou Rae Langevin,

LT, JAGC, USN, Alternate Federal Register Liaison Officer.

[FR Doc. 98–9967 Filed 4–14–98; 8: 45 am]

BILLING CODE 3810–FF–P

DEPARTMENT OF DEFENSE

Department of the Navy

Meeting of the Naval Research Advisory Committee

AGENCY: Department of the Navy, DoD.

ACTION: Notice of meeting.

SUMMARY: The Naval Research Advisory Committee will meet to acquaint Committee members with research, development, test and evaluation, acquisition and product support for training systems; interservice coordination; and learning and simulation technologies. This meeting will be open to the public.

DATES: The meeting will be held on Tuesday, April 28, 1998 from 8:00 a.m. to 4:30 p.m., and on Wednesday, April 29, 1998 from 8:00 a.m. to 4:00 p.m.

ADDRESSES: The meeting will be held at the Naval Air Warfare Center, Training Systems Division, 12350 Research Parkway, Orlando, Florida.

FOR FURTHER INFORMATION CONTACT: Diane Mason-Muir, Program Director, Naval Research Advisory Committee, 800 North Quincy Street, Arlington, VA 22217–5660, telephone number: (703) 696–6769.

SUPPLEMENTARY INFORMATION: This notice of meeting is provided in accordance with the provisions of the Federal Advisory Committee Act (5 U.S.C. App. 2).

Dated: April 7, 1998.

Lou Rae Langevin,

Lieutenant, Judge Advocate General's Corps, U.S. Navy, Alternate Federal Register Liaison Officer.

[FR Doc. 98–9968 Filed 4–14–98; 8:45 am]

BILLING CODE 3810–FF–P

DELAWARE RIVER BASIN COMMISSION

Notice of Commission Meeting and Public Hearing

Notice is hereby given that the Delaware River Basin Commission will hold a public hearing on Tuesday, April 21, 1998. The hearing will be part of the Commission's regular business meeting which is open to the public and scheduled to begin at 9:30 a.m. in the Seminar Room of the Burlington Meeting House at 340 High Street, Burlington, New Jersey.

In addition to the subjects listed below which are scheduled for public hearing, the Commission will also address the following: Minutes of the March 25, 1998 business meeting; announcements; General Counsel's

Report; report on Basin hydrologic conditions; overview of Water Snapshot '96–'98; and public dialogue.

The subjects of the hearing will be as follows:

Applications for Approval of the Following Projects Pursuant to Article 10.3, Article 11 and/or Section 3.8 of the Compact:

1. *Superior Tube Company D–96–13.* A ground water withdrawal project to withdraw up to 13 million gallons (mg)/30 days of water as part of the applicant's ground water remediation system from new Well Nos. MW–18, MW–19, MW–20, MW–22 and PW–3D, and to limit the withdrawal from all wells to 13 mg/30 days. The project is located in Lower Providence Township, Montgomery County, in the Southeastern Pennsylvania Ground Water Protected Area.

2. *Superior Tube Company D–97–23.* A project to consolidate discharges from the applicant's industrial wastewater treatment system, ground water remediation treatment system, and non-contact cooling water into one new outfall to Perkiomen Creek, at a combined average monthly rate of approximately 0.273 million gallons per day (mgd). The existing effluents are currently discharged to tributaries of the Perkiomen Creek (an unnamed tributary and French Run). The proposed outfall will be located just to the west of the applicant's specialty metal tube manufacturing plant site just north of Route 422 on the east side of the Perkiomen Creek in Lower Providence Township, Montgomery County, Pennsylvania.

3. *Newmanstown Water Authority D–97–40 CP.* A ground water withdrawal project to supply up to 6 mg/30 days of water to the applicant's distribution system from new Well No. 5, and to limit the withdrawal from Well Nos. 1, 4 and 5 to 10.3 mg/30 days. The project is located in Millcreek Township, Lebanon County, Pennsylvania.

4. *AES Ironwood Power, Inc. D–97–45.* A project to construct a 700 megawatt gas-fired combined cycle electric generation facility in South Lebanon Township, Lebanon County, Pennsylvania. The applicant proposes to meet its water needs of up to 4.5 mgd by diversion of up to 2.25 mgd from an existing quarry discharge to Tulpehocken Creek (located in the Delaware River Basin), and by diversion of up to 2.25 mgd from a portion of the City of Lebanon sewage treatment plant wastewater discharge from Quittapahilla Creek (located in the Susquehanna River Basin). While the diversion of water from the discharge to Quittapahilla Creek is an importation of water into the Delaware River Basin, the proposed project is designed to have no discharge to surface or ground water.

5. *Fairton Federal Correctional Institution D–98–5 CP.* A ground water withdrawal project to supply up to 8.53 mg/30 days of water to the applicant's prison facility from existing Well Nos. 1 and 2, and to limit the withdrawal from all wells to 8.53 mg/30 days. The project is located in Fairfield Township, Cumberland County, New Jersey.

6. *Evansburg Water Company D–98–12 CP.* A ground water withdrawal project to supply up to 0.9 mg/30 days of water to the applicant's Evansburg Division system from Well No. 102, and to limit the withdrawal from all wells to 2.6 mg/30 days. The project is located in Lower Providence Township, Montgomery County, in the Southeastern Pennsylvania Ground Water Protected Area.

Documents relating to these items may be examined at the Commission's offices. Preliminary dockets are available in single copies upon request. Please contact Thomas L. Brand at (609) 883–9500 ext. 221 concerning docket-related questions. Persons wishing to testify at this hearing are requested to register with the Secretary at (609) 883–9500 ext. 203 prior to the hearing.

Dated: April 7, 1998.

Susan M. Weisman,

Secretary.

[FR Doc. 98–9971 Filed 4–14–98; 8:45 am]

BILLING CODE 6360–01–P

DEPARTMENT OF EDUCATION

[CFDA No.: 84.331A]

Grants to States for Workplace and Community Transition Training for Incarcerated Youth Offenders Program; Notice Inviting Applications for New Awards for Fiscal Year (FY) 1998

Purpose of Program: The Workplace and Community Transition Training for Incarcerated Youth Offenders Program supports grants to State correctional education agencies to—(a) assist and encourage incarcerated youths to acquire functional literacy or life and job skills through the pursuit of a postsecondary education certificate or an associate of arts or bachelors' degree while in prison; and (b) provide employment counseling and other related services that start during incarceration and continue through pre-release and while on parole or during release.

Eligible Applicants: A State correctional education agency appointed by the Governor of any of the 50 States, the Commonwealth of Puerto Rico, District of Columbia, Guam, American Samoa, the Virgin Islands, and the Northern Mariana Islands.

Deadline for Transmittal of Applications: June 1, 1998.

Deadline for Intergovernmental Review: July 31, 1998.

Applications Available: April 15, 1998. Application materials will be sent to the State correctional education agency appointed by the Governor.

Available Funds: $12,000,000.

Estimated Number of Awards: 56.

Note: The Department is not bound by any estimates in this notice.

Applicable Regulations: The Education Department General Administrative Regulations (EDGAR) in 34 CFR Parts 76, 77, 79, 80, 81, 82, 85, and 86.

For Information Contact: Richard L. Smith, U.S. Department of Education, 600 Independence Avenue, S.W., Room 4529, Switzer Building, Washington, D.C. 20202–7142. Telephone (202) 205–5621. Individuals who use a telecommunications device for the deaf (TDD) may call the Federal Information Relay Service (FIRS) at 1–800–877–8339 between 8 a.m. and 8 p.m., Eastern time, Monday through Friday.

Individuals with disabilities may obtain this document in an alternate format (e.g., Braille, large print, audiotape, or computer diskette) on request to the contact person listed in the preceding paragraph.

Individuals with disabilities may obtain a copy of the application package in an alternate format, also, by contacting that person. However, the Department is not able to reproduce in an alternate format the standard forms included in the application package.

Electronic Access to This Document

Anyone may view this document, as well as all other Department of Education documents published in the **Federal Register**, in text or portable document format (pdf) on the World Wide Web at either of the following sites:

http://ocfo.ed.gov/fedreg.htm http://www.ed.gov/news.html

To use the pdf you must have the Adobe Acrobat Reader Program with Search, which is available free at either of the previous sites. If you have questions about using the pdf, call the U.S. Government Printing Office toll free at 1–888–293–6498.

Anyone may also view these documents in text copy only on an electronic bulletin board of the Department. Telephone: (202) 219–1511

or, toll free, 1–800–222–4922. The documents are located under Option G—Files/Announcements, Bulletins and Press Releases.

Note: The official version of a document is the document published in the **Federal Register**.

Program Authority: 20 U.S.C. 1135g.

Dated: April 10, 1998.

Patricia W. McNeil,

Assistant Secretary for Vocational and Adult Education.

[FR Doc. 98–9973 Filed 4–14–98; 8:45 am]

BILLING CODE 4000–01–P

DEPARTMENT OF EDUCATION

[CFDA Nos.: 84.133A and 84.133B]

Office of Special Education and Rehabilitative Services, National Institute on Disability and Rehabilitation Research; Notice Reinviting Applications and Pre-application Meetings for New Awards for a Dissemination and Utilization (D&U) Project and a Rehabilitation Research and Training Center (RRTC) for Fiscal Year (FY) 1998

Purpose: On May 9, 1997 a notice was published in the **Federal Register** (62 FR 25770) inviting applications for new FY 1997 awards for: (1) A D&U project to improve the utilization of existing and emerging rehabilitation technology in the State vocational rehabilitation program; and (2) an RRTC on effective interventions for children and youth with disabilities who exhibit severe problem behaviors. Satisfactory applications were not received for these priority areas. On November 13, 1997 (62 FR 60942) a notice was published in the **Federal Register** reinviting applications for these same priority areas. Again, satisfactory applications were not received for these priority areas. There is, however, a continuing need for these projects.

The purposes of this notice are: (1) to reinvite applications for a D&U project to improve the utilization of existing and emerging rehabilitation technology in the State vocational rehabilitation program and an RRTC on effective interventions for children and youth with disabilities who exhibit severe problem behaviors for FY 1998; and (2) To invite interested parties to participate in pre-application meetings to discuss the funding priorities and receive technical assistance through individual consultation and information about the funding priorities. The notice of final funding priorities establishing the required activities for these projects was published on May 9, 1997 in the **Federal Register** (62 FR 25760). The notice reinviting applications and a complete application package, including selection criteria for these projects, was published on November 13, 1997 in the **Federal Register** (62 FR 60942).

Eligible Applicants: Parties eligible to apply for grants under this program are States; public or private agencies, including for-profit agencies; public or private organizations, including for-profit organizations, institutions of higher education; and Indian tribes and tribal organizations.

Applications Available: April 15, 1998.

Pre-Application Meetings: Interested parties are invited to participate in pre-application meetings to discuss the funding priorities for a D&U project to improve the utilization of existing and emerging rehabilitation technology in the State vocational rehabilitation program and an RRTC on effective interventions for children and youth who exhibit severe problem behaviors, and to receive technical assistance through individual consultation and information about the funding priority. The pre-application meetings to discuss these funding priorities will be held at the Department of Education, Office of Special Education and Rehabilitative Services, Switzer Building, Room 1002, 330 C St. SW, Washington, DC between 9:00 a.m. and 11:00 a.m. NIDRR staff will also be available at this location from 1:30 p.m. to 5:00 p.m. on that same day to provide technical assistance through individual consultation and information about the funding priority. NIDRR will make alternate arrangements to accommodate interested parties who are unable to attend the pre-application meeting in person.

The pre-application meeting for the D&U project to improve the utilization of existing and emerging rehabilitation technology in the State vocational rehabilitation program will held on Monday, May 11, 1998.

The pre-application meeting for RRTC on effective interventions for children and youth with disabilities who exhibit severe problem behaviors will be held on Tuesday, May 12, 1998.

Priority: (1) The D&U project to improve the utilization of existing and emerging rehabilitation technology in the State vocational rehabilitation program, and (2) the RRTC on effective interventions for children and youth who exhibit severe problem behaviors general requirements and final priority published in the **Federal Register** on May 9, 1997 (62 FR 25760) apply to this competition.

Applicable Regulations: (a) The Education Department General Administrative Regulations (EDGAR), 34 CFR Parts 74, 75, 77, 78, 80, 81, 82, 85, 86; (b) the regulations for this program in 34 CFR Part 350; (c) the notice of final priorities published in the **Federal Register** on May 9, 1997 (62 FR 25760); and the notice inviting applications published in the **Federal Register** on November 13, 1997 (62 FR 60942).

For Further Information Contact: In order to obtain further information about the funding priority and the pre-application meeting on the D&U project to improve the utilization of existing and emerging rehabilitation technology in the State vocational rehabilitation program contact Richard Johnson, U.S. Department of Education, Room 3415 Switzer Building, 600 Maryland Avenue, S.W., Washington, D.C. 20202. Telephone: (202) 205–8203. Individuals who use a telecommunications device for the deaf (TDD) may call the TDD number at (202) 205–8198.

In order to obtain further information about the funding priority and the pre-application meeting on the RRTC on effective interventions for children and youth who exhibit severe problem behaviors, contact Roseann Rafferty, U.S. Department of Education, Room 3428 Switzer Building, 600 Maryland Avenue, S.W., Washington, D.C. 20202. Telephone: (202) 205–5867. Individuals who use a telecommunications device for the deaf (TDD) may call the TDD number at (202) 205–2742.

In order to obtain an application package, contact Donna Nangle, U.S. Department of Education, Room 3423 Switzer Building, 600 Maryland Avenue, S.W., Washington, D.C. 20202. Telephone: (202) 205–5880. Individuals who use a telecommunications device for the deaf (TDD) may call the TDD number at (202) 205–8887.

Individuals with disabilities may obtain this document in an alternate format (e.g., Braille, large print, audiotape, or computer diskette) on request to the contact person listed in the preceding paragraph.

APPLICATION NOTICE FOR FISCAL YEAR 1998 DISABILITY AND REHABILITATION RESEARCH PROJECTS, CFDA NO. 84–133A, REHABILITATION RESEARCH AND TRAINING CENTERS, CFDA NO. 84–133B

Funding priority	Deadline for transmittal of applications	Estimated number of awards	Maximum award amount (per year)*	Project period (months)
(1) D & U: Improving the Utilization of Emerging and Existing Rehabilitation Technology in State VR Programs.	July 9, 1998	1	$500,000	60
(2) RRTC: Effective Interventions for Children and Youth who Exhibit Severe Problem Behaviors.	July 9, 1998	1	600,000	60

*Note: The Secretary will reject without consideration or evaluation any application that proposes a project funding level that exceeds the stated maximum award amount per year (See 34 CFR 75.104(b)).

Electronic Access to This Document

Anyone may view this document, as well as all other Department of Education documents published in the **Federal Register**, in text or portable document format (pdf) on the World Wide Web at either of the following sites:

http://ocfo.ed.gov/fedreg.htm
http://www.ed.gov/news.html

To use the pdf you must have the Adobe Acrobat Reader Program with Search, which is available free at either of the preceding sites. If you have questions about using the pdf, call the U.S. Government Printing Office toll free at 1–888–293–6498.

Anyone may also view these documents in text copy only on an electronic bulletin board of the Department. Telephone: (202) 219–1511 or, toll free, 1–800–222–4922. The documents are located under Option G—Files/Announcements, Bulletins and Press Releases.

Note: The official version of this document is the document published in the **Federal Register**.

Program Authority: 29 U.S.C. 761a and 762.

Dated: April 8, 1998.

Judith E. Heumann,

Assistant Secretary, Office of Special Education and Rehabilitative Services.

[FR Doc. 98–9974 Filed 4–14–98; 8:45 am]

BILLING CODE 4000–01–P

DEPARTMENT OF ENERGY

Floodplain and Wetlands Involvement Notification for Implementation of the Wetland Mitigation Bank at the Savannah River Site (SRS)

AGENCY: Department of Energy (DOE).

ACTION: Notification of floodplain and wetlands involvement.

SUMMARY: DOE proposes to implement a wetland mitigation bank program at SRS. A wetland mitigation bank is a regulatory accounting program which provides advanced compensation for unavoidable wetland losses due to development activities. The proposed action is needed to support future projects at SRS which would require wetland impact mitigation or compensation. The proposed action is embodied in an interagency Memorandum of Agreement (MOA) between DOE and several Federal and State environmental regulatory agencies. In accordance with title 10 CFR Part 1022, DOE will prepare a floodplain and wetlands assessment and will perform this proposed action in a manner so as to avoid or minimize potential harm to or within the affected floodplain or wetlands.

DATES: Comments on the proposed action due on or before April 30, 1998.

ADDRESSES: Comments regarding this assessment should be addressed to Andrew R. Grainger, National Environmental Policy Act (NEPA) Compliance Officer, Savannah River Operations Office, Building 773–42A, Room 212, Aiken, South Carolina 29808. The fax/phone number is (800) 881–7292. The e-mail address is nepa@srs.gov.

FOR FURTHER INFORMATION ON GENERAL FLOODPLAIN/WETLANDS ENVIRONMENTAL REVIEW REQUIREMENTS, CONTACT: Ms. Carol M. Borgstrom, Director, Office of NEPA Policy and Assistance (EH–42), U. S. Department of Energy, 1000 Independence Avenue, SW., Washington, DC 20585. Telephone (202) 586–4600 or (800) 472–2756.

A location map showing SRS and further information can be obtained from the Savannah River Operations Office (see **ADDRESSES** above).

SUPPLEMENTARY INFORMATION: The proposed DOE action entails the implementation of a wetland mitigation bank program at SRS, located near Aiken, South Carolina. A wetland mitigation bank is a regulatory accounting program which provides advanced compensation for unavoidable wetland losses due to development activities. The purpose of the proposed action is to provide the DOE Savannah River Operations Office (SR) with a compensatory alternative for unavoidable wetland losses associated with future authorized construction and environmental restoration projects in SRS wetlands. In addition, the proposed action would enable DOE–SR to gain credit for wetland restoration work that would not otherwise be accomplished through alternative programs or means. Future projects such as the remediation of waste sites and the repair and maintenance of roads and bridges on SRS probably will impact some wetland areas. By establishing a wetland mitigation bank prior to such impacts, DOE–SR can incorporate mitigation efforts required for new projects in a more timely manner. For future remediation and construction projects that require compensatory wetland mitigation, the bank would save the time and money needed to locate a suitable wetland for restoration and to obtain approval for its use.

This proposed action would encompass both the general mitigation activities on SRS wetlands and the overall management of the resulting site ''banking'' program. In all instances, wetland impact avoidance and minimization would be employed prior to being able to use compensatory mitigation. This wetland mitigation bank would be a dedicated bank, to be used for SRS project needs only. The proposed action would be implemented in conjunction with the landscape-scale land use planning effort that is currently being developed at SRS. The existence of degraded wetlands, channelized streams, and thermally-impacted swamp forests in proximity to a large tract of high-quality forested wetlands and old-age upland forest provide DOE–SR the opportunity to develop a bank with a high probability of success. A key advantage for establishing the bank at SRS is the presence of experienced land management and research groups on site.

The scope of the proposed action is detailed in an interagency MOA between DOE–SR; the U. S. Army Corps of Engineers, Charleston District; the U. S. Environmental Protection Agency (Region IV); the U.S. Department of the Interior, Fish and Wildlife Service; the U.S. Department of Agriculture, Natural Resources Conservation Service; the South Carolina Department of Health and Environmental Control; and the South Carolina Department of Natural Resources. The U.S. Department of Commerce, National Marine Fisheries Service will continue to coordinate with SRS wetland impact and mitigation issues, but legally was prohibited from becoming a signatory party to this MOA. The MOA established the basic components and inner workings of the SRS wetland mitigation bank. The MOA also established the mitigation banking review team, an interagency group designated to review and consult with DOE–SR regarding compensation proposals. This team consists of representatives of the same agencies which signed the MOA and the National Marine Fisheries Service.

The SRS wetland mitigation bank would involve the restoration and enhancement of small isolated wetlands, as well as major wetland systems scattered throughout the site's nonindustrialized area. The primary goal of the bank would be the restoration and enhancement of degraded Carolina bays and stream-side bottomland hardwood forest on SRS. Mitigation opportunities within the industrialized area may also be explored to provide mitigation sites where feasible.

During implementation of the proposed action, potential activities that could take place in floodplain and wetland areas might include grading, timber harvest (e.g., removal of overstory upland trees in drained Carolina bays), placement of soils (e.g., plugging of drainage ditches or restoration of hydric soils), planting of hydrophytic vegetation, and monitoring and maintenance efforts. Some of these activities would require temporary construction access during certain restoration/enhancement projects. A number of mitigation activities would be implemented to minimize potential impacts to the floodplain and wetland areas. Operation of construction equipment in the wetland and floodplain areas would be minimized. Depending upon the type of mechanized construction equipment to be employed, the use of platform support mats may be required to minimize the impacts to the wetland soils in the project area. Silt fences and other erosion control structures as needed would be installed to ensure there is no deposition in the downslope wetland areas. Best management practices would be employed during construction and maintenance activities associated with this proposed action.

In accordance with DOE regulations for compliance with floodplain and wetland environmental review requirements (title 10 CFR Part 1022), DOE–SR will prepare a floodplain and wetlands assessment for this proposed DOE action. The assessment will be included in the environmental assessment (EA) being prepared for the proposed action in accordance with the requirements of NEPA. A floodplain statement of findings will be included in any finding of no significant impact that is issued following the completion of the EA or may be issued separately.

Issued in Aiken, SC, on April 2, 1998.

Lowell E. Tripp,

Director, Engineering and Analysis Division, Savannah River Operations Office.

[FR Doc. 98–9953 Filed 4–14–98; 8:45 am]

BILLING CODE 6450–01–P

DEPARTMENT OF ENERGY

Intent to Solicit Inventions and Innovation Program Grants

AGENCY: The Department of Energy (DOE), Golden Field Office.

ACTION: Notice of intent to issue a solicitation.

SUMMARY: The DOE's Office of Industrial Technologies (DOE) is funding a competitive grant program entitled the Inventions and Innovation (I&I) Program. The goals of the I&I Program are to improve energy efficiency through the promotion of innovative ideas and inventions that have a significant potential energy impact and a potential future commercial market. These goals are consistent with the mission of the Office of Energy Efficiency and Renewable Energy, which is to develop and promote the adoption of cost-effective renewable energy and energy efficiency technologies within the building, industrial, transportation, and utility sectors for the benefit of economic competitiveness, energy security, and environmental quality of the nation. The following focus industries, which are the dominant energy users and waste generators in the U.S. manufacturing sector, are of particular interest to the DOE program: Aluminum, Chemicals, Forest Products, Glass, Metal-Casting, and Steel.

DATES: DOE expects to issue the solicitation on or about May 1, 1998.

ADDRESSES: To obtain a copy of the solicitation, eligible parties may write to the U.S. Department of Energy Golden Field Office, Attention: Jennifer Squire, 1617 Cole Boulevard, Golden, Colorado 80401, or obtain an electronic copy through the Golden Field Office Home Page at http://www.eren.doe.gov/golden/solicit.htm beginning May 1, 1998.

Only written request for the solicitation will be honored. For convenience, requests for the solicitation may be faxed to Ms. Squire at (303) 275–4788.

SUPPLEMENTARY INFORMATION: DOE has revised the process of financial assistance under the I&I Program. Formerly the program had two distinct programs: The Energy-Related Inventions Program (ERIP) and the Innovative Concepts Program (InnCon). Proposals for each program were submitted through an unsolicited application process to DOE through the National Institute of Standards and Technology, formerly the National Bureau of Standards for ERIP and directly to DOE/OIT for InnCon. DOE is now combining these two programs under one competitive solicitation process. DOE intends to issue a new solicitation annually. The Golden Field Office has been assigned the responsibility to issue the solicitation and administer the awards for OIT. Ideas that have a significant energy savings impact and future commercial market potential are chosen for financial support through the competitive solicitation process. The new I&I Program will provide financial assistance at two levels, up to $40,000 or up to $100,000 depending on the stage of development of an idea. In addition to financial assistance this program offers technical guidance and commercialization support to successful applicants.

Some former selected projects that the I&I Program has funded are:

(1) Thermefficient 100[r]—a high efficiency fired heater that extracts heat from exhaust gases to raise the temperature of incoming water to be heated. The thermal efficiency of the technology is nearly 100% and reduces fossil fuel use.

(2) Brandon Rings—prevent damage and energy loss that occur over time with start-up, thermal distortion, and shaft vibration in turbines. These have been used in commercial turbine systems in the U.S. saving over 110 trillion BTU since 1986.

(3) Electro-Optic Inspection of Heat Exchangers—is a laser based, nondestructive evaluation system for

inspecting heat exchanger tubing for internal corrosion, erosion, scale buildup, and deformation. The benefits are reduced downtime and increased efficiency for fossil and nuclear power plants, pulp and paper, and petro-chemical plants.

Solicitation Specifics

There are no restrictions, however, small businesses, individual inventors, and entrepreneurs are especially encouraged to participate. The Catalog of Federal Domestic Assistance number assigned to this program is 81.036. Cost sharing is not required but encouraged by applicants and/or cooperating participants. In addition to direct financial contributions, cost sharing can include beneficial services or items such as manpower equipment, consultants, and computer time that are allowable in accordance with applicable cost principles.

Availability of Funds in Fy 1999

With publication, DOE is announcing the availability of up to $3 million dollars in grant agreement funds for fiscal year 1999. The awards will be made through a competitive process. Each award may cover a project period of up to two (2) years. DOE anticipates awarding grants at two levels. The first level will fund up to $40,000 for Category 1 proposals, which fall within the first two stages of development. The second level will fund up to $100,000 for Category 2 proposals, which fall within the last three stages of development. Refer to Appendix 1 of the Solicitation for definitions. DOE reserves the right to fund, in whole or in part, any, all, or none of the proposals submitted in response to this notice.

Issued in Golden, CO, on April 8, 1998.

John W. Meeker,

Chief, Procurement, Golden Field.

[FR Doc. 98–9955 Filed 4–14–98; 8:45 am]

BILLING CODE 6450–01–P

DEPARTMENT OF ENERGY

Office of Energy Efficiency and Renewable Energy

Advisory Committee on Appliance Energy Efficiency Standards

AGENCY: Department of Energy (DOE).

ACTION: Notice of open meeting.

SUMMARY: Pursuant to the provisions of the Federal Advisory Committee Act (Public Law 92–463, 86 Stat. 770) notice is hereby given of a meeting of the Advisory Committee on Appliance Energy Efficiency Standards. The Department will consider the information and comments received at this meeting in the conduct of its appliance standards program.

DATES: May 5, 1998, 9:00 a.m.–1:00 p.m.

ADDRESS: Holiday Inn Capitol, 550 C Street, SW, Washington DC 20024, (202) 479–4000.

FOR FURTHER INFORMATION CONTACT: Sandy Beall, U.S. Department of Energy, Office of Energy Efficiency and Renewable Energy, Forrestal Building, Mail Station EE–43, 1000 Independence Avenue, SW, Washington, DC 20585–0121, (202) 586–7574, or Brenda Edwards-Jones, U.S. Department of Energy, Office of Energy Efficiency and Renewable Energy, Forrestal Building, Mail Station EE–43, 1000 Independence Avenue, SW, Washington, DC 20585–0121, (202) 586–2945.

SUPPLEMENTARY INFORMATION: Purpose of the Committee: The Advisory Committee on Appliance Energy Efficiency Standards was established to provide input on the appliance standards rulemaking process. The Committee serves as the focal point for discussion on the implementation of the procedures, interpretations, and policies set forth in the rule on ''Procedures for Consideration of New or Revised Energy Conservation Standards for Consumer Products,'' 61 FR 36973 (July 15, 1996), and on cross cutting analytical issues affecting all product standard rulemakings.

Tentative Agenda

9:00 am Chairman's Remarks
9:15 am Introductions and Agenda Review
- Introduction
- Agenda Review

9:55 am FY 1999 Proposed Priority Setting
- Overview
- Comments/Discussion

10:10 am Analysis Accomplishments
- Engineering Analysis
- Life Cycle Cost Methodology
- Energy Forecasting
- Manufacturing Impact

11:10 pm Break
11:30 am DOE Response to Advisory Committee Recommendation
11:50 am Public Comment
12:10 pm New Business
12:30 pm Action Items and Deliverables for Next Meeting
12:45 pm Chairman's Closing Remarks
1:00 pm Adjourn

Please note that this draft agenda is preliminary. The times and agenda items listed are guidelines and are subject to change. A final agenda will be available at the meeting on Tuesday, May 5, 1998.

Public Participation: The meeting is open to the public. Please notify either Brenda Edwards-Jones, (202) 586–2945, or Sandy Beall, (202) 586–7574, if you plan to attend the Advisory Committee meeting. Written statements may be filed either before or after the meeting. In order to have your written comments distributed at the Advisory Committee meeting, please provide 10 copies to the contacts listed in the **FOR FURTHER INFORMATION CONTACT** section at least 7 days prior to the meeting. Members of the public who wish to make oral statements should contact the Office of Codes and Standards at the address or telephone numbers listed in the **FOR FURTHER INFORMATION CONTACT** section. Requests must be received 7 days prior to the meeting, and a reasonable provision will be made to include the presentation in the agenda. Such presentations may be limited to five minutes. The Designated Federal Official is empowered to conduct the meeting in a fashion that will facilitate the orderly conduct of business.

Minutes: Copies of the Committee's charter, minutes of the Committee meetings held on January 8, 1997, June 23, 1997, and December 12, 1997, this notice, and other correspondence regarding the Committee may be viewed at the U.S. Department of Energy, Freedom of Information Public Reading Room, Forrestal Building, Room 1E–190, 1000 Independence Avenue, SW, Washington, DC 20585, (202) 586–6020, between the hours of 9:00 a.m. and 4:00 p.m., Monday through Friday, except Federal holidays. A copy of the Committee's meeting transcript will be available in the DOE public reading room approximately 10 days after the meeting. Minutes will also be available 60 days after the meeting by writing to Brenda Edwards-Jones or Sandy Beall at the address listed in the **FOR FURTHER INFORMATION CONTACT** section.

Issued in Washington, DC, on April 9, 1998.

Rachel M. Samuel,

Deputy Advisory Committee Management Officer.

[FR Doc. 98–9954 Filed 4–14–98; 8:45 am]

BILLING CODE 6450–01–P

DEPARTMENT OF ENERGY

Federal Energy Regulatory Commission

[Docket No. TM98–2–127–001]

Cove Point LNG Limited Partnership; Notice of Compliance Filing

April 9, 1998.

Take notice that on April 6, 1998, Cove Point LNG Limited Partnership (Cove Point) tendered for filing to become a part of Cove Point's FERC Gas Tariff, First Revised Volume No. 1, Substitute Fourth Revised Sheet No. 7, to be effective April 1, 1998≤

Cove Point states that this tariff sheet is being filed in order to comply with the Commission's letter order issued in the above captioned proceeding on March 20, 1998, to correct an error in a reference to a Storage Turnover Provision.

Cove Point states that copies of the filing were served upon Cover Point's customers and interested State Commissions.

Any person desiring to protest this filing should file a protest with the Federal Energy Regulatory Commission, 888 First Street, N.E., Washington, D.C. 20426, in accordance with Section 385.211 of the Commission's Rules and Regulations. All such protests must be filed as provided in Section 154.210 of the Commission's Regulations. Protests will be considered by the Commission in determining the appropriate action to be taken, but will not serve to make protestants parties to the proceedings. Copies of this filing are on file with the Commission and are available for public inspection in the Public Reference Room.

Linwood A. Watson, Jr.,

Acting Secretary.

[FR Doc. 98–9903 Filed 4–14–98; 8:45 am]

BILLING CODE 6717–01–M

DEPARTMENT OF ENERGY

Federal Energy Regulatory Commission

[Docket No. CP98–331–000]

Gas Transport, Inc.; Notice of Request Under Blanket Authorization

April 9, 1998.

Take notice that on April 3, 1998, as supplemented on April 8, 1998, Gas Transport, Inc., (Applicant), P.O. Box 430, Lancaster, Ohio, 43130–0430, filed in Docket No. CP98–331–000 a request pursuant to Sections 157.205 and 157.212 of the Commission's Regulations under the Natural Gas Act (18 CFR 157.205 and 157.212) for approval to construct and operate a new delivery tap for service to Hope Gas Company (Hope), under Applicant's blanket certificate issued in Docket No. CP83–164–000, pursuant to Section 7(c) of the Natural Gas Act (NGA), all as more fully set forth in the request which is on file with the Commission and open to public inspection.

Applicant proposes to construct and operate an additional delivery tap to render interruptible service for Hope located on Applicant's Line No. 1 in Wood County, West Virginia. Applicant asserts that the volumes of natural gas to be delivered at the proposed tap, up to 3,000 Mcf per year, are within the certificated entitlement of Hope. Applicant states that the total cost of construction of the proposed facility is estimated to be $5,000. Applicant further asserts that Hope will pay an estimated $3,000 for the measurement and regulation station at the proposed new facility and that Applicant will pay an estimated $2,000 for the construction of the tap.

Any person or the Commission's Staff may, within 45 days of the issuance of the instant notice by the Commission, file pursuant to Rule 214 of the Commission's Rules of Practice and Procedure (18 CFR 385.214), a motion to intervene and pursuant to Section 157.205 of the regulations under the Natural Gas Act (18 CFR 157.205), a protest to the request. If no protest is filed within the time allowed therefor, the proposed activities shall be deemed to be authorized effective the day after the time allowed for filing a protest. If a protest is filed and not withdrawn 30 days after the time allowed for filing a protest, the instant request shall be treated as an application for authorization pursuant to Section 7 of the Natural Gas Act.

Linwood A. Watson, Jr.,

Acting Secretary.

[FR Doc. 98–9890 Filed 4–14–98; 8:45 am]

BILLING CODE 6717–01–M

DEPARTMENT OF ENERGY

Federal Energy Regulatory Commission

[Docket No. RP98–182–000]

MIGC, Inc,; Notice of Proposed Changes in FERC Gas Tariff

April 9, 1998.

Take notice that on April 6, 1998, MIGC, Inc. (MIGC), tendered for filing as part of its FERC Gas Tariff, First Revised Volume No. 1, certain tariff sheets with a proposed effective date of May 1, 1998.

MIGC states that the purpose of the filing is to make the following revisions to its tariff: add provisions to govern the scheduling priority with regard to firm secondary point nominations and make minor housekeeping changes to correct spelling and format errors.

MIGC states that copies of its filing are being mailed to its jurisdictional customers and interested state commissions.

MIGC has requested waiver of Section 154.207 of the Commission's Regulations in order that the instant tariff filing may become effective on less than 30 days notice.

Any person desiring to be heard or to protest this filing should file a motion to intervene or a protest with the Federal Energy Regulatory Commission, 888 First Street, N.E., Washington, D.C. 20426, in accordance with Sections 385.214 and 385.211 of the Commission's Rules and Regulations. All such motions or protests must be filed as provided in Section 154.210 of the Commission's Regulations. Protests will be considered by the Commission in determining the appropriate action to be taken, but will not serve to make protestants parties to the proceedings. Any person wishing to become a party must file a motion to intervene. Copies of this filing are on file with the Commission and are available for public inspection in the Public Reference Room.

Linwood A. Watson, Jr.,

Acting Secretary.

[FR Doc. 98–9899 Filed 4–14–98; 8:45 am]

BILLING CODE 6717–01–M

DEPARTMENT OF ENERGY

Federal Energy Regulatory Commission

[Docket No. RP96–329–003]

NorAm Gas Transmission Company; Notice of Refund Report

April 9, 1998.

Take notice that on January 21, 1998, NorAm Gas Transmission Company (NGT) tendered for filing its RP96–329–003 Refund Report.

NGT states that this filing is in compliance with the Commission's December 24, 1997 ''Order Accepting Withdrawal of Filing and Terminating Proceeding Subject to Conditions,'' Docket No. RP96–329–002. As directed in the Order, NGT states that it tendered refunds on January 29, 1997, August 20, 1997, October 9, 1997, and January 20, 1998, to the affected parties for all

monies collected under its GSR surcharge.

NGT states that a copy of the report has been served upon affected customers, interested state commissions and all parties designated on the official service list.

Any person desiring to protest this filing should file a protest with the Federal Energy Regulatory Commission, 888 First Street, N.E., Washington, D.C. 20426, in accordance with Section 385.211 of the Commission's Rules and Regulations. All such protests must be filed on or before April 16, 1998. Protests will be considered by the Commission in determining the appropriate action to be taken, but will not serve to make protestants parties to the proceedings. Copies of this filing are on file with the Commission and are available for public inspection in the Public Reference Room.

Linwood A. Watson, Jr.,

Acting Secretary.

[FR Doc. 98–9896 Filed 4–14–98; 8:45 am]

BILLING CODE 6717–01–M

DEPARTMENT OF ENERGY

Federal Energy Regulatory Commission

[Docket No. RP98–181–000]

OkTex Pipeline Company; Notice of Proposed Changes in FERC Gas Tariff

April 9, 1998.

Take notice that on April 6, 1998, OkTex Pipeline Company (OkTex) tendered for filing as a part of its FERC Gas Tariff, Original Volume No. 1, 11th Revised Sheet No. 5, to become effective October 1, 1998. Tariff Sheets 5 has been revised with this filing.

OkTex states that the proposed changes would increase revenues from jurisdictional service by $23,351 based on the 12-month period ending December 31, 1997, as adjusted.

OkTex states that it proposes to increase its rates in order to take into account an increase in rate base, in labor expense, and other taxes. This increase will allow OkTex to earn a reasonable rate of return on its investment.

Any person desiring to be heard or to protest this filing should file a motion to intervene or a protest with the Federal Energy Regulatory Commission, 888 First Street, N.E., Washington, D.C. 20426, in accordance with Sections 385.214 and 385.211 of the Commission's Rules and Regulations. All such motions or protests must be filed as provided in Section 154.210 of the Commission's Regulations. Protests will be considered by the Commission in determining the appropriate action to be taken, but will not serve to make protestants parties to the proceedings. Any person wishing to become a party must file a motion to intervene. Copies of this filing are on file with the Commission and are available for public inspection in the Public Reference Room.

Linwood A. Watson, Jr.,

Acting Secretary.

[FR Doc. 98–9900 Filed 4–14–98; 8:45 am]

BILLING CODE 6717–01–M

DEPARTMENT OF ENERGY

Federal Energy Regulatory Commission

[Docket No. RP98–184–000]

Overthrust Pipeline Company; Notice of Tariff Filing

April 9, 1998.

Take notice that on April 8, 1998, Overthrust Pipeline Company tendered for filing as part of its FERC Gas Tariff, First Revised Volume No. 1–A, the following tariff sheets, to be effective May 8, 1998:

First Revised Sheet Nos. 31 and 59
Second Revised Sheet Nos. 32 and 34A
Third Revised Sheet No. 33
Fourth Revised Sheet No. 34

Overthrust states that this filing, which is technical in nature, revises its tariff to achieve consistency between the term previously used by Overthrust to set forth its final acceptance and scheduling of a nomination for delivery to a shipper (confirmed) nomination and the term implemented by the Gas Industry Standards Board (GISB) for the same purpose (scheduled) nomination or quantities.

Overthrust states further that a copy of this filing has been served upon its customers, and the Public Service Commission of Wyoming.

Any person desiring to be heard or to protest this filing should file a motion to intervene or a protest with the Federal Energy Regulatory Commission, 888 First Street, N.E., Washington, D.C. 20426, in accordance with Sections 385.214 and 385.211 of the Commission's Rules and Regulations. All such motions or protests must be filed as provided in Section 154.210 of the Commission's Regulations. Protests will be considered by the Commission in determining the appropriate action to be taken, but will not serve to make protestants parties to the proceedings. Any person wishing to become a party must file a motion to intervene. Copies of this filing are on file with the Commission and are available for public inspection in the Public Reference Room.

Linwood A. Watson, Jr.,

Acting Secretary.

[FR Doc. 98–9902 Filed 4–14–98; 8:45 am]

BILLING CODE 6717–01–M

DEPARTMENT OF ENERGY

Federal Energy Regulatory Commission

[Docket No. RP98–183–000]

Questar Pipeline Company; Notice of Tariff Filing

April 9, 1998.

Take notice that on April 8, 1998, Questar Pipeline Company tendered for filing as part of its FERC Gas Tariff, First Revised Volume No. 1, the following tariff sheets, to be effective May 8, 1998:

First Revised Sheet Nos. 10, 12, 22, 31, 76, 78, 113 and 169A
Second Revised Sheet Nos. 21 and 77
Third Revised Sheet Nos. 43, 54, 79 and 170
Fourth Revised Sheet Nos. 91 and 166

Questar states that the purpose of this tariff filing, which is technical in nature, is two-fold. First, Questar has revised its tariff to be consistent with the terminology set forth by the Gas Industry Standards Board to address final acceptance and approval of nominations tendered by a shipper to a transportation service provider. Second, Questar has made minor punctuation and subsection identification changes to Section 3.1(g) of Rate Schedule T–1, Section 4.1(b) of Rate Schedule NNT, Section 3.1(d) of Rate Schedule T–2 and Section 5.7 of the General Terms and Conditions of Part 1 of its tariff.

Questar states further that a copy of this filing has been served upon its customers, the Public Service Commission of Utah and the Public Service Commission of Wyoming.

Any person desiring to be heard or to protest this filing should file a motion to intervene or a protest with the Federal Energy Regulatory Commission, 888 First Street, N.E., Washington, D.C. 20426, in accordance with Sections 385.214 and 385.211 of the Commission's Rules and Regulations. All such motions or protests must be filed as provided in Section 154.210 of the Commission's Regulations. Protests will be considered by the Commission in determining the appropriate action to be taken, but will not serve to make protestants parties to the proceedings. Any person wishing to become a party must file a motion to intervene. Copies of this filing are on file with the

Commission and are available for public inspection in the Public Reference Room.

Linwood A. Watson, Jr.,

Acting Secretary.

[FR Doc. 98–9901 Filed 4–14–98; 8:45 am]

BILLING CODE 6717–01–M

DEPARTMENT OF ENERGY

Federal Energy Regulatory Commission

[Docket No. EC97–12–000]

San Diego Gas & Electric Company Enova Energy, Inc.; Notice of Filing

April 9, 1998.

Take notice that on April 2, 1998, San Diego Gas & Electric Company and Enova Energy, Inc., tendered for filing a compliance filing in the above-referenced docket.

Any person desiring to be heard or to protest said filing should file a motion to intervene or protest with the Federal Energy Regulatory Commission, 888 First Street, N.E., Washington, D.C. 20426, in accordance with Rules 211 and 214 of the Commission's Rules of Practice and Procedure (18 CFR 385.211 and 18 CFR 385.214). All such motions or protests should be filed on or before April 22, 1998. Protests will be considered by the Commission in determining the appropriate action to be taken, but will not serve to make Protestants parties to the proceeding. Any person wishing to become a party must file a motion to intervene. Copies of this filing are on file with the Commission and are available for public inspection.

Linwood A. Watson, Jr.,

Acting Secretary.

[FR Doc. 98–9888 Filed 4–14–98; 8:45 am]

BILLING CODE 6717–01–M

DEPARTMENT OF ENERGY

Federal Energy Regulatory Commission

[Docket No. CP98–333–000]

Texas Gas Transmission Corporation; Notice of Request Under Blanket Authorization

April 9, 1998.

Take notice that on April 3, 1998, Texas Gas Transmission Corporation (Applicant), 3800 Fredrica Street, Owensboro, Kentucky 42301, filed in Docket No. CP98–333–000 a request pursuant to Sections 157.205 and 157.211 of the Commission's Regulations under the Natural Gas Act (18 CFR 157.205 and 157.211) for approval to construct and operate a new delivery point for service to Linder Oil Company (Linder) located in Iberia Parish, Louisiana, under Applicant's blanket certificate issued in Docket No. CP82–407–000, pursuant to Section 7(c) of the Natural Gas Act (NGA), all as more fully set forth in the request which is on file with the Commission and open to public inspection.

Applicant proposes to modify an existing receipt point by installing a two-inch delivery meter station in order to provide gas lift gas service requested by Linder. Applicant states that this existing receipt point is located on Applicant's East Bayou Pigeon Gulf Eight-Inch Line in Iberia Parish, Louisiana. Applicant asserts that Linder will fully reimburse Applicant for the cost of construction of the aforementioned facilities, which Applicant estimates to be $27,470.

Applicant indicates that Linder is requesting up to 100 MMBtu per day of interruptible transportation service to be used as gas lift gas for Linder's operations in the Northeast Bayou Pigeon Field. Applicant asserts that this request will have no significant impact on Applicant's peak day and annual deliveries and that service through this point to Linder can be accomplished without detriment to Applicant's other customers.

Any person or the Commission's Staff may, within 45 days of the issuance of the instant notice by the Commission, file pursuant to Rule 214 of the Commission's Rules of Practice and Procedure (18 CFR 385.214), a motion to intervene and pursuant to Section 157.205 of the regulations under the Natural Gas Act (18 CFR 157.205), a protest to the request. If no protest is filed within the time allowed therefor, the proposed activities shall be deemed to be authorized effective the day after the time allowed for filing a protest. If a protest is filed and not withdrawn 30 days after the time allowed for filing a protest, the instant request shall be treated as an application for authorization pursuant to Section 7 of the Natural Gas Act.

Linwood A. Watson, Jr.,

Acting Secretary.

[FR Doc. 98–9891 Filed 4–14–98; 8:45 am]

BILLING CODE 6717–01–M

DEPARTMENT OF ENERGY

Federal Energy Regulatory Commission

[Docket No. TM98–10–29–000]

Transcontinental Gas Pipe Line Corporation; Notice of Proposed Changes in FERC Gas Tariff

April 9, 1998.

Take notice that on April 3, 1998 Transcontinental Gas Pipe Line Corporation (Transco) tendered for filing to become part of its FERC Gas Tariff, Third Revised Volume No. 1, Twelfth Revised Sheet No. 28. The tariff sheet is proposed to be effective April 1, 1998.

Transco states that the purpose of the instant filing is to track rate changes attributable to storage service purchased from Texas Eastern Transmission Corporation (TETCO) under its Rate Schedule X–28, the costs of which are included in the rates and charges payable under Transco's Rate Schedule S–2. This tracking filing is being made pursuant to tracking provisions under Section 26 of the General Terms and Conditions of Transco's Volume No. 1 Tariff.

Transco states that the Appendix B attached to the filing contains explanations of the rate changes and details regarding the computation of the revised Rate Schedule S–2 rates.

Transco states that copies of the filing are being mailed to its affected customers and interested State Commissions.

Any person desiring to be heard or to protest this filing should file a motion to intervene or a protest with the Federal Energy Regulatory Commission, 888 First Street, N.E., Washington, D.C. 20426, in accordance with Sections 385.214 and 385.211 of the Commission's Rules and Regulations. All such motions or protests must be filed as provided in Section 154.210 of the Commission's Regulations. Protests will be considered by the commission in determining the appropriate action to be taken, but will not serve to make protestants parties to the proceedings. Any person wishing to become a party must file a motion to intervene. Copies of this filing are on file with the Commission and are available for public inspection in the Public Reference Room.

Linwood A. Watson, Jr.,

Acting Secretary.

[FR Doc. 98–9904 Filed 4–14–98; 8:45 am]

BILLING CODE 6717–01–M

DEPARTMENT OF ENERGY

Federal Energy Regulatory Commission

[Docket No. CP98–326–000]

Williams Gas Pipelines Central, Inc.; Notice of Request Under Blanket Authorization

April 9, 1998.

Take notice that on April 2, 1998, Williams Gas Pipelines Central, Inc. (Williams Central), Post Office Box 3288, Tulsa, Oklahoma 74101, filed in Docket No. CP98–326–000 a request pursuant to Sections 157.205 and 157.216 of the Commission's Regulations under the Natural Gas Act (18 CFR 157.205 and 157.216) for permission and approval to abandon facilities used for the receipt of transportation gas from Westar Transmission Company (Westar) and the related service, at two locations in Hemphill County, Texas. Williams Central makes such request under its blanket certificate issued in Docket No. CP82–479–000 pursuant to Section 7 of the Natural Gas Act, all as more fully set forth in the request on file with the Commission and open to public inspection.

The Hemphill County facilities that Williams Central is proposing to abandon, were originally installed in 1989 (Setting #15033) and in 1994 (Setting #16349) to receive transportation gas from Westar. It is stated that Westar installed, at its own cost, the meter settings and, as a result, is the owner of the meter settings. Williams Central states that its facilities consist of the tap and appurtenant facilities.

It is averred that Westar has reclaimed meter #15033 and that Westar has informed Williams Central that they no longer have pipeline quality gas in their connecting line and thus plan to also reclaim meter #16349. Williams Central states that since Westar owns and will remove the meter setting, Williams Central's reclaim cost will be approximately $250.

Any person or the Commission's staff may, within 45 days after issuance of the instant notice by the Commission, file pursuant to Rule 214 of the Commission's Procedural Rules (18 CFR 385.214) a motion to intervene or notice of intervention and pursuant to Section 157.205 of the Regulations under the Natural Gas Act (18 CFR 157.205) a protest to the request. If no protest is filed within the time allowed therefor, the proposed activity shall be deemed to be authorized effective the day after the time allowed for filing a protest. If a protest is filed and not withdrawn within 30 days after the time allowed for filing a protest, the instant request shall be treated as an application for authorization pursuant to Section 7 of the Natural Gas Act.

Linwood A. Watson, Jr.,

Acting Secretary.

[FR Doc. 98–9889 Filed 4–14–98; 8:45 am]

BILLING CODE 6717–01–M

DEPARTMENT OF ENERGY

Federal Energy Regulatory Commission

[Docket Nos. RP98–165–001 and RP89–183–079]

Williams Gas Pipelines Central, Inc.; Notice of Proposed Changes in FERC Gas Tariff

April 9, 1998.

Take notice that on April 7, 1998, Williams Gas Pipelines Central, Inc. (Williams), tendered for filing to become part of its FERC Gas Tariff, Original Volume No. 1, the following tariff sheet, with the proposed effective date of May 1, 1998:

First Revised Sheet No. 38

Williams states that this filing is being made to revise its second quarter, 1998, report of take-or-pay buyout, buydown and contract reformation costs and gas supply related transition costs, made pursuant to Article 14 of the General Terms and Conditions of its FERC Gas Tariff, Original Volume No. 1. Original Sheet No. 38 in that filing was inadvertently paginated incorrectly. First Revised Sheet No. 38 is being filed to correct the pagination.

Williams states that a copy of its filing was served on all participants listed on the service lists maintained by the Commission in the dockets referenced above and on all of Williams' jurisdictional customers and interested state commissions.

Any person desiring to protest this filing should file a protest with the Federal Energy Regulatory Commission, 888 First Street, N.E., Washington, D.C. 20426, in accordance with Section 385.211 of the Commission's Rules and Regulations. All such protests must be filed as provided in Section 154.210 of the Commission's Regulations. Protests will be considered by the Commission in determining the appropriate action to be taken, but will not serve to make protestants parties to the proceedings. Copies of this filing are on file with the Commission and are available for public inspection in the Public Reference Room.

Linwood A. Watson, Jr.,

Acting Secretary.

[FR Doc. 98–9897 Filed 4–14–98; 8:45 am]

BILLING CODE 6717–01–M

DEPARTMENT OF ENERGY

Federal Energy Regulatory Commission

[Docket No. RP98–180–000]

Williams Gas Pipelines Central, Inc.; Notice of Proposed Changes in FERC Gas Tariff

April 9, 1998.

Take notice that on April 6, 1998, Williams Gas Pipelines Central, Inc. (Williams) tendered for filing to become part of its FERC Gas Tariff, Original Volume No. 1, the following tariff sheets:

First Revised Sheet Nos. 457, 458, 459 and 462

Williams states that it is filing a revised Form of Operational Balancing Agreement (OBA) to more closely conform to the GISB timelines, standards and terminology. The changes proposed in the attached tariff sheets and described below are non-substantive in nature. Throughout the proposed OBA, Williams has adopted the term ''scheduled quantities'' which is used in the GISB standards to refer to nominations which have been confirmed and scheduled by the pipeline. Williams will convert existing OBAs to the revised form if the holder desires.

Williams states that a copy of its filing was served on all of Williams' jurisdictional customers and interested state commissions.

Any person desiring to be heard or to protest this filing should file a motion to intervene or a protest with the Federal Energy Regulatory Commission, 888 First Street, N.E., Washington, D.C. 20426, in accordance with Sections 385.214 and 385.211 of the Commission's Rules and Regulations. All such motions or protests must be filed as provided in Section 154.210 of the Commission's Regulations. Protests will be considered by the Commission in determining the appropriate action to be taken, but will not serve to make protestants parties to the proceedings. Any person wishing to become a party must file a motion to intervene. Copies of this filing are on file with the Commission and are available for public

inspection in the Public Reference Room.

Linwood A. Watson, Jr.,

Acting Secretary.

[FR Doc. 98–9898 Filed 4–14–98; 8:45 am]

BILLING CODE 6717–01–M

DEPARTMENT OF ENERGY

Federal Energy Regulatory Commission

[Docket No. RP98–104–000]

Williston Basin Interstate Pipeline Company; Notice of Further Technical Conference

April 9, 1998.

On April 7, 1998, pursuant to the January 30, 1998 order in this docket,[1] staff convened a technical conference at which the parties addressed issues related to Williston Basin Interstate Pipeline Company's (Williston Basin) proposal to implement a paper pooling service. Parties in attendance requested that an additional technical conference be held.

Take notice that the second technical conference will be held on Monday, April 20, 1998, at 10:00 a.m., in a room to be designated at the offices of the Federal Energy Regulatory Commission, 888 First Street, NE, Washington, D.C. 20426.

All interested parties and Staff are permitted to attend.

Linwood A. Watson, Jr.,

Acting Secretary.

[FR Doc. 98–9895 Filed 4–14–98; 8:45 am]

BILLING CODE 6717–01–M

DEPARTMENT OF ENERGY

Federal Energy Regulatory Commission

[Project No. 2375–013, Maine Project No. 8277–008, Maine]

International Paper Company; Otis Hydroelectric Company; Notice of Availability of Draft Environmental Assessment and Notice of Commission Staff Meeting

April 9, 1998.

In accordance with the National Environmental Policy Act of 1969 and the Federal Energy Regulatory Commission's (Commission) regulations, 18 CFR Part 380 (Order No. 486, 52 FR 47897), the Office of Hydropower Licensing has reviewed the applications for major new licenses for the Riley-Jay-Livermore Project and Otis Hydroelectric Project located on the Androscoggin River in Franklin, Androscoggin, and Oxford Counties, near the Towns of Canton, Jay, Livermore, and Livermore Falls, Maine, and has prepared a Draft Environmental Assessment (DEA) for re-licensing the projects. In the DEA, the Commission's staff has analyzed the potential environmental impacts of the projects and has concluded that approval of the projects, with appropriate mitigative measures, would not constitute a major federal action significantly affecting the quality of the human environment.

Copies of the DEA are available for review in the Public Reference Branch, Room 2–A, of the Commission's offices at 888 First Street, N.E., Washington, D.C. 20426.

In addition, Commission staff will hold a meeting, as follows, to discuss the Commission's DEA. All interested parties are welcome to attend this meeting.

Meeting Date: May 6, 1998 from 10 a.m. to 12 p.m.

Location: International Paper Forestry Building 9 Green St., Augusta, Maine 04330–7443.

Comments on the DEA should be filed within 30 days from the date of this notice and should be addressed to David P. Boergers, Acting Secretary, Federal Energy Regulatory Commission, 888 First Street, N.E., Washington, D.C. 20426. Please affix Project No. 2375–013 to all comments. For further information, please contact Monte J. TerHaar at (202) 219–2768 or Patti Leppert-Slack at (202) 219–2767.

Linwood A. Watson, Jr.,

Acting Secretary.

[FR Doc. 98–9893 Filed 4–14–98; 8:45 am]

BILLING CODE 6717–01–M

DEPARTMENT OF ENERGY

Federal Energy Regulatory Commission

[Project No. 2663–004, Minnesota]

Minnesota Power and Light Company; Notice of Availability of Final Environmental assessment

April 9, 1998.

In accordance with the National Environmental Policy Act of 1969 and the Federal Energy Regulatory Commission's (Commission) regulations, 18 CFR Part 380 (Order No. 486, 52 FR 47897), the Office of Hydropower Licensing has reviewed the application for new license for the Pillager Hydroelectric Project, located on the Crow Wing River in Cass and Morrison Counties, Minnesota, and has prepared a Final Environmental Assessment (FEA) for the project.

Copies of the FEA are available in the Public Reference Branch, Room 2–A, of the Commission's offices at 888 First Street, NE., Washington, DC 20426.

For further information, contact Chris Metcalf at (202) 219–2810.

Linwood A. Watson, Jr.,

Acting Secretary.

[FR Doc. 98–9892 Filed 4–14–98; 8:45 am]

BILLING CODE 6717–01–M

DEPARTMENT OF ENERGY

Federal Energy Regulatory Commission

Notice of Application Tendered for Filing with the Commission

April 9, 1998.

a. *Type of Application:* Major Unconstructed License (Notice of Tendering).

b. *Project No.:* 11508–000.

c. *Date Filed:* March 27, 1998.

d. *Applicant:* Alaska Power and Telephone Company.

e. *Name of Project:* Wolf Lake Hydroelectric Project.

f. *Location:* On Prince of Wales Island in Southeast Alaska, three miles north of the community of Hollis, in sections 23–26, 34 and 35, Range 84 East, Township 73 South.

g. *Filed Pursuant to:* Federal Power Act, 16 USC 791(a)–825(r).

h. *Applicant Contact:* Robert S. Grimm, President, Alaska Power and Telephone Company, P.O. Box 3222, 191 Otto Street, Port Townsend, WA 98368, (306) 385–1733.

i. *FERC Contact:* Carl Keller, (202) 219–2831.

j. *Brief Description of Project:* The proposed project would consist of: (1) a 30- by 40-foot prefabricated metal powerhouse building along the right bank of Wolf Creek, having a single horizontal twin-jet Pelton turbine with an installed capacity of 2.2 megawatts; (2) a 6,000-foot-long, 22-inch-diameter steel and high density polyethlene chloride penstock; (3) a 15-foot-long, 10-foot-wide, by 6-foot-deep tailrace channel; (4) a 50-foot-long intake structure having a screened 20-foot-long by 3-foot-high spillway; (5) a 3.5-acre impoundment; (6) a 12.5-kilovolt, 2.3-mile-long overhead transmission line on wooden poles; (7) a 20-foot-wide by 2.3-mile-long access road; and (8) other appurtenances.

k. With this notice, we are initiating consultation with the Alaska State

---

[1] Williston Basin Interstate Pipeline Company, 82 FERC ¶ 61,082 (1998).

Historic Preservation Officer (SHPO), as required by § 106, National Historic Preservation Act, and the regulations of the Advisory Council on Historic Preservation, 36 CFR 800.4.

l. Under Section 4.32(b)(7) of the Commission's regulations (18 CFR 4.32(b)(7)), if any resource agency, SHPO, Indian Tribe, or person believes that the applicant should conduct an additional scientific study to form an adequate, factual basis for a complete analysis of this application on its merits, they must file a request for the study with the Commission, together with justification for such request, not later than 60 days after application is filed, and must serve a copy of the request on the applicant.

Linwood A. Watson, Jr.,

Acting Secretary.

[FR Doc. 98–9894 Filed 4–15–98; 8:45 am]

BILLING CODE 6717–01–M

ENVIRONMENTAL PROTECTION AGENCY

[FRL–5978–3]

Agency Information Collection Activities: Proposed Collection; Comment Request; Best Management Practices for the Bleached Papergrade Kraft and Soda Subcategory and the Papergrade Sulfite Subcategory of the Pulp, Paper, and Paperboard Point Source Category

AGENCY: Environmental Protection Agency (EPA).

ACTION: Notice.

SUMMARY: In compliance with the Paperwork Reduction Act (44 U.S.C. 3501 *et seq.*), this notice announces that EPA is planning to submit the following proposed and/or continuing Information Collection Request (ICR) to the Office of Management and Budget (OMB): Information Collection Request for Best Management Practices, Effluent Limitations Guidelines and Standards, Pulp, Paper, and Paperboard Manufacturing Category (40 CFR Part 430). Before submitting the ICR to OMB for review and approval, EPA is soliciting comment on specific aspects of the proposed information collection as described below.

DATES: Comments must be submitted on or before June 15, 1998.

ADDRESSES: Send comments on this notice in triplicate to Mr. Troy Swackhammer, Office of Water, Engineering and Analysis Division (4303), U.S. Environmental Protection Agency, 401 M Street, SW., Washington, DC 20460. In addition to submitting hard copies of the comments, the public may also send comments via e-mail to: swackhammer.j-troy@epamail.epa.gov. Copies of the draft information collection request are available at http://www.epa.gov/OST/pulppaper/.

FOR FURTHER INFORMATION CONTACT: Mr. Troy Swackhammer by voice on (202) 260–712, by facsimile on 202–260–7185, or by e-mail at swackhammer.j-troy@epamail.epa.gov.

SUPPLEMENTARY INFORMATION:

Regulated entities

Entities potentially affected by this action are those operations that chemically pulp wood fiber using kraft or soda methods to produce bleached papergrade pulp, paperboard, coarse paper, tissue paper, fine paper, and/or paperboard; and those operations that chemically pulp wood fiber using papergrade sulfite methods to produce pulp and/or paper.

Title: Best Management Practices for the Bleached Papergrade Kraft and Soda Subcategory and the Papergrade Sulfite Subcategory of the Pulp, Paper, and Paperboard Point Source Category (EPA ICR No. 1829.01).

Abstract: The Environmental Protection Agency (EPA) has established Best Management Practice provisions as part of final amendments to 40 CFR Part 430, the Pulp, Paper and Paperboard Point Source Category published elsewhere in today's **Federal Register**. See 40 CFR Part 430.03. These provisions, promulgated under the authorities of Sections 304, 307, 308, 402, and 501 of the Clean Water Act, require that owners or operators of bleached papergrade kraft, soda and sulfite mills implement site-specific BMPs to prevent or otherwise contain leaks and spills of spent pulping liquors, soap and turpentine and to control intentional diversions of these materials.

EPA has determined that these BMPs are necessary because the materials controlled by these practices, if spilled or otherwise lost, can interfere with wastewater treatment operations and lead to increased discharges of toxic, nonconventional, and conventional pollutants. For further discussion of the need for BMPs, see Section VI.B.7 of the preamble to the amendments to 40 CFR Part 430 published elsewhere in today's **Federal Register**.

The BMP program includes information collection requirements that are intended to help accomplish the overall purposes of the program by, for example, training personnel, see 40 CFR 430.03(c)(4), analyzing spills that occur, see 40 CFR 430.03(c)(5), identifying equipment items that might need to be upgraded or repaired, see 40 CFR 430.03(c)(2), and performing monitoring—including the operation of monitoring systems—to detect leaks, spills and intentional diversion and generally to evaluate the effectiveness of the BMPs, see 40 CFR 430.03(c)(3), (c)(10), (h), and (i). The regulations also require mills to develop and, when appropriate, amend plans specifying how the mills will implement the specified BMPs, and to certify to the permitting or pretreatment authority that they have done so in accordance with good engineering practices and the requirements of the regulation. See 40 CFR 430.03(d), (e) and (f). The purpose of those provisions is, respectively, to facilitate the implementation of BMPs on a site-specific basis and to help the regulating authorities to ensure compliance without requiring the submission of actual BMP plans. Finally, the recordkeeping provisions are intended to facilitate training, to signal the need for different or more vigorously implemented BMPs, and to facilitate compliance assessment. See 40 CFR 430.03(g).

EPA has structured the regulation to provide maximum flexibility to the regulated community and to minimize administrative burdens on National Pollutant Discharge Elimination System (NPDES) permit and pretreatment control authorities that regulate bleached papergrade kraft and soda and papergrade sulfite mills. Although EPA does not anticipate that mills will be required to submit any confidential business information or trade secrets as part of this ICR, all data claimed as confidential business information will be handled by EPA pursuant to 40 CFR Part 2.

An agency may not conduct or sponsor, and a person is not required to respond to, a collection of information unless it displays a currently valid OMB control number. The OMB control numbers for EPA's regulations are listed in 40 CFR Part 9 and 48 CFR Chapter 15.

Solicitation of Comments

EPA solicits comments that would help the Agency to better:

(i) evaluate whether the proposed collection of information is necessary for the proper performance of the functions of the Agency, including whether the information will have practical utility;

(ii) evaluate the accuracy of the Agency's estimate of the burden of the proposed collection of information, including the validity of the methodology and assumptions used;

(iii) enhance the quality, utility, and clarity of the information to be collected; and

(iv) minimize the burden of the collection of information on those who are to respond, including through the use of appropriate automated electronic, mechanical, or other technological collection techniques or other forms of information technology (e.g., permitting electronic submission of responses).

Burden Statement

The following discussion describes the information collection requirements of the BMP regulations and estimates the burden associated with each one.

Burden means the total time, effort, or financial resources expended by persons to generate, maintain, retain, or disclose or provide information to or for a Federal agency. This includes time needed to: review instructions; develop, acquire, install, and utilize technology and systems for the purposes of collecting, validating, and verifying information, processing and maintaining information and disclosing and providing information; adjust the existing ways to comply with previously applicable instructions and requirements; train personnel to be able to respond to the collection of information; search data sources; complete and review the collection of information and transmit or otherwise disclose the information.

The BMP regulations at 40 CFR 430.03 include the following major components: (1) Development, review and certification of a BMP plan, which should include programs to identify and repair leaking equipment, to track equipment repairs, to train personnel, to report and evaluate spills, to review planned mill modifications, and to establish wastewater treatment system influent action levels (including an initial six-month monitoring program) in addition to a detailed engineering review of the pulping and chemical recovery areas; (2) amendment and periodic review of the BMP plan; (3) reporting of spills; (4) additional monitoring and reporting; and (5) additional recordkeeping. See 40 CFR 430.03 (c) through (h) and the ''Technical Support Document for Best Management Practices for Spent Pulping Liquor Management, Spill Prevention, and Control,'' October 1997, DCN 14489, EPA–821–R–97–015 (also referred to below as the BMP TSD) for more detailed information on the requirements. The BMP requirements apply to approximately 95 papergrade kraft, soda, and sulfite mills.

a. Development, Review and Certification of a BMP Plan

Development of a site-specific BMP plan is a one-time initial burden. Plan preparation costs will vary based upon mill complexity. EPA anticipates that mills will use outside consultants under direction of mill personnel to prepare the site-specific BMP plan, including the detailed engineering review. Costs for preparing the BMP Plan, which range from $150,000 to $250,000, are included in the compliance cost estimates developed for the regulation (see Table 9.2 of the BMP TSD, DCN 14489). EPA anticipates mill labor burden of 40, 60, and 80 hours (at $30 per hour) for direction and oversight of the consultant effort for simple, moderately complex, and complex mills, respectively. Review of the initial plan by the senior technical manager and certification by the mill manager is expected to take less than one day of effort (at $40 per hour). These one-time burden estimates associated with the BMP plan are summarized in Table 1 of this notice.

As part of the BMP plan development, mills must establish a training program for technical personnel. This training program must include both an initial training effort and an annual refresher training. The burden for initial training is included in the compliance costs referenced above (see Table 9.2 of the BMP TSD, DCN 14489). Burden for annual refresher training is included in the annual estimates presented in Table 2 of this notice.

b. Amendment and Periodic Review of a BMP Plan

Owners or operators must amend their BMP Plans whenever there is a change in mill design, construction, operation or maintenance that materially affects the potential for leaks or spills of spent pulping liquor, soap or turpentine from the immediate process areas. See 40 CFR 430.03(e)(1). In addition, owners or operators must complete a review and evaluation of their BMP plans at least once every five years, and amend the plan within three months if warranted. See 40 CFR 430.03(e)(2). Any BMP plan amendments also require review by the senior technical manager and certification by the mill manager. See 40 CFR 430.03(f).

EPA anticipates less than 50 hours of mill labor per amendment, and based the ICR burden on an assumption that each mill would need to amend its BMP plan twice every five years, for an annual burden of 20 hours ($620), which is included in the annual estimates presented in Table 2.

c. Reporting of Spills

Reports of spills of spent pulping liquor, soap or turpentine not contained in the immediate process area must list the equipment involved, the circumstances leading to the incident, the effectiveness of corrective actions taken and plans to implement future changes. These reports must be maintained by the owner or operator, and they need only be submitted to the NPDES permit or pretreatment control authority upon request. EPA anticipates that the burden of preparing a spill report is approximately four hours and can be conducted by a mill engineer at $30 per hour. ICR burden is calculated on an annual basis using an assumption of 1 spill per mill per month and is included in the annual estimates presented in Table 2.

d. Additional Monitoring and Reporting

Mills are required to operate continuous, automatic monitoring systems that the mill determine are necessary to detect and control leaks, spills, and intentional diversions of spent pulping liquor, soap, and turpentine. See 40 CFR 430.03(c)(3). The burden for designing, testing, and operating the monitoring system, expressed in the form of costs, is included in the compliance cost estimates developed for the regulation (see Table 9.2 of the BMP TSD, DCN 14489).

In addition, all mills with the exception of new sources are required to perform two six-month monitoring programs in order to determine the characteristics (or action levels) of their wastewater treatment system effluent. See 40 CFR 430.03(h). (New sources are required to perform only one six-month monitoring program for this purpose. See 40 CFR 430.03(h)(5).) All mills are also required to perform additional monitoring to revise those action levels after any change in mill design, construction, operation, or maintenance that materially affects the potential for leaks or spills or spent pulping liquor, soap, or turpentine from the immediate process area. See 40 CFR 430.03(h)(6). The effort required to implement the initial monitoring program and perform the associated statistical analysis to establish the action levels is included in the compliance cost estimates developed for the regulation, and the burden to perform monitoring to revise those action levels is included in the incremental monitoring burden discussed below.

The regulation also requires all mills to conduct daily monitoring of wastewater treatment system influent for the purpose of detecting leaks and spills, tracking the effectiveness of the BMPs, and detecting trends in spent pulping liquor losses. See 40 CFR 430.03(i). EPA estimates the burden associated with this monitoring to be increment of 1 additional hour per day (at $20/hour) as included in annual estimates shown in Table 2 of this notice. Costs for monitoring equipment were included in the compliance cost estimates developed for the regulation (see Table 9.2 of the BMP TSD, DCN 14489).

Mill operators are required to provide their NPDES permit or pretreatment control authorities reports of the monitoring required by the BMP regulation. The reports must include a summary of the monitoring results, the number and dates of exceedances of the applicable action levels, and brief descriptions of any corrective actions taken to respond to such exceedances. Submission of such reports shall be at the frequency established by the NPDES permit or pretreatment control authority, but in no case less than once per year. EPA has based the burden estimates on a semi-annual reporting frequency and estimates that each report will take 16 hours to complete, including both engineer and senior technical manager effort (also included in Table 2 estimates).

e. Recordkeeping Requirements

The regulation requires that certain equipment repair records, records of employee training, reports of spills outside the immediate process area, and records of monitoring conducted as part of the BMP program be maintained for three years. See 40 CFR 430.03(g). EPA expects that the level of effort will depend upon mill complexity. Burden estimates for recordkeeping are based on an incremental level of effort to comply with BMP requirements consisting of 2 to 4 hours per month for the operators/shift supervisors over current shift log recordkeeping (at $20 per hour), 2 to 4 hours per months for engineering technicians (at $30 per hour), and two hours per month for clerical support (at $15 per hour). These burden estimates are also included in the annual estimates presented in Table 2 below.

f. Total Industry Burden Estimates

Based on the assumptions listed above, EPA estimates the following one-time burden associated with mill labor for the BMP requirements:

TABLE 1.—BURDEN ESTIMATES FOR PREPARING AND CERTIFYING THE BMP PLAN

[One-time burden]

Process (complexity)	Number of mills	Hours (industry-wide)	Dollars ($) (industry-wide)
Kraft (simple)	41	1,969	62,320
Kraft (moderately complex)	30	2,040	63,600
Kraft (complex)	13	1,144	35,360
Sulfite (simple)	11	528	16,720
Total	95	5,680	178,000

Note: BMP plan development costs that are contracted out are considered compliance costs and are not included here; they are presented in Table 9–2 of the BMP TSD, DCN 14489.

Based on the assumptions listed above, EPA estimates the following recurring burden associated with mill labor for the BMP requirements:

TABLE 2.—BURDEN ESTIMATE FOR MAINTAINING BMP PLAN, SPILL RECORDS, PERSONNEL TRAINING, ETC.

[Recurring burden]

Process (complexity)	Number of mills	Annual hours (industry-wide)	Annual dollars ($) (industry-wide)
Kraft (simple)	41	22,017	487,080
Kraft (moderately complex)	30	16,830	374,400
Kraft (complex)	13	7,605	170,040
Sulfite (simple)	11	5,907	130,680
Total	95	52,359	1,162,200

g. Government Burden Estimates

EPA estimates the initial burden to state NPDES permitting authorities and state and local pretreatment control authorities will be 950 hours based on ten hours per facility for the preparation of new NPDES permit or pretreatment control mechanism conditions implementing the BMP regulation. EPA estimates the recurring incremental burden to these state and local authorities will be 950 hours per year based on ten hours per year per facility for administrative work associated with reviewing periodic (e.g., annual or semi-annual) reports of monitoring and conducting compliance reviews. State and local labor costs are estimated at $19,000 per year, based on labor rates of $20 per hour. EPA estimates that its incremental labor burden will be 100 hours annually for the BMP regulation and will incur costs of $3,000 per year, based on labor rates of $30 per hour.

Dated: April 3, 1998.

Tudor T. Davies,

Director, Office of Science and Technology.

[FR Doc. 98–9556 Filed 4–14–98; 8:45 am]

BILLING CODE 6560–50–P

ENVIRONMENTAL PROTECTION AGENCY

[FRL–5996–8]

Agency Information Collection Activities: Submission for OMB Review; Comment Request; Facility Ground-Water Monitoring Requirements

AGENCY: Environmental Protection Agency (EPA).

ACTION: Notice.

SUMMARY: In compliance with the Paperwork Reduction Act (44 U.S.C. 3501 *et seq.*), this notice announces that the following Information Collection Request (ICR) has been forwarded to the Office of Management and Budget (OMB) for review and approval: Facility Ground-Water Monitoring Requirements, EPA ICR #959.10; OMB Control Number 2050–0033; expiring 5/31/98. The ICR describes the nature of the information collection and its expected burden and cost; where appropriate, it includes the actual data collection instrument.

DATES: Comments must be submitted on or before May 15, 1998.

FOR FURTHER INFORMATION OR A COPY: Contact Sandy Farmer at EPA by phone at (202) 260–2740, by email at farmer.sandy@epamail.epa.gov, or download off the Internet at http://www.epa.gov/icr and refer to EPA ICR No. 959.10.

SUPPLEMENTARY INFORMATION:

Title: Facility Ground-Water Monitoring Requirements, OMB Control Number 2050–0033; EPA ICR #959.10; expiring 5/31/98. This is a request for an extension of a currently approved collection.

Abstract: Subtitle C of the Resource Conservation and Recovery Act of 1976 (RCRA) creates a comprehensive program for the safe management of hazardous waste. Section 3004 of RCRA requires owners and operators of facilities that treat, store, or dispose of hazardous waste to comply with standards established by EPA that are ''necessary to protect human health and the environment.'' Section 3005 provides for implementation of these standards under permits issued to owners and operators by EPA or authorized States. Section 3005 also allows owners and operators of facilities in existence when the regulations came into effect to comply with applicable notice requirements to operate until a permit is issued or denied. This statutory authorization to operate prior to permit determination is commonly known as ''interim status.'' Owners and operators of interim status facilities also must comply with standards set under Section 3004.

EPA promulgated ground-water monitoring standards for interim status facilities in 1980 (45 FR 33154 May 19, 1980), codified in 40 CFR Part 265, Subpart F, and for permitted facilities in 1982 (47 FR 32274 July 26, 1982), codified in 40 CFR Part 264, Subpart F. Both sets of standards establish programs for protecting ground water from releases of hazardous wastes from land disposal facilities with regulated units (these include surface impoundments, waste piles, land treatment units, and landfills).

The ground-water monitoring requirements for regulated units follow a tiered approach whereby releases of hazardous contaminants are first detected, then confirmed, and, if necessary, are required to be cleaned up. Each of these tiers requires collection and analysis of groundwater samples. Owners or operators that conduct groundwater monitoring are required to report information to the oversight agencies on releases of contaminants and to maintain records of ground-water monitoring data at their facilities. The goal of the ground-water monitoring program is to prevent and quickly detect releases of hazardous contaminants to groundwater, and to establish a program whereby any contamination is expeditiously cleaned up. An agency may not conduct or sponsor, and a person is not required to respond to, a collection of information unless it displays a currently valid OMB control number. The OMB control numbers for EPA's regulations are listed in 40 CFR Part 9 and 48 CFR Chapter 15. The **Federal Register** Notice required under 5 CFR 1320.8(d), soliciting comments on this collection of information was published on 1/26/98 (63FR 3737); two comments were received.

Burden Statement: The annual public reporting burden for this collection of information is estimated to average 11.1 hours per year, and the annual record keeping burden is estimated at 23.6 hours per year; these estimates represent the overall reporting and record keeping burdens placed on permitted facilities, regardless of whether they are performing detection monitoring, compliance monitoring or corrective action. The specific burden estimates for these activities include: (1) For facilities performing detection monitoring, average reporting burden of 5.2 hours per year and an average record keeping burden of 25.5 hours per year; (2) for facilities performing compliance monitoring, average reporting burden of 9.0 hours per year and an average record keeping burden of 24.5 hours per year; (3) for facilities performing corrective action, average reporting burden of 20.0 hours per year and an average record keeping burden of 20.5 hours per year. Burden means the total time, effort, or financial resources expended by persons to generate, maintain, retain, or disclose or provide information to or for a Federal agency. This includes the time needed to review instructions; develop, acquire, install, and utilize technology and systems for the purposes of collecting, validating, and verifying information, processing and maintaining information, and disclosing and providing information; adjust the existing ways to comply with any previously applicable instructions and requirements; train personnel to be able to respond to a collection of information; search data sources; complete and review the collection of information; and transmit or otherwise disclose the information.

Reasons for change in burden: The burden estimates reflect a revised analysis of burden that resulted from better identification of (1) capital and (2) operational and maintenance (O&M) costs. The overall annual burden hour estimate has decreased from 181,179 hours to 64,181 hours, a decrease of 116,998 hours per year. This burden hour decrease is better attributed to burden costs for the purchases of O&M services in the amount of $80,106,000.

Respondents/Affected Entities: Owners or operators of RCRA hazardous waste facilities that treat, store, or dispose of hazardous waste in regulated units (these include surface impoundments, waste piles, land treatment units, and landfills).

Estimated Number of Respondents: 1,647.

Frequency of Response: Varies.

Estimated Total Annual Hour Burden: 64,181 hours.

Estimated Total Annualized Cost Burden: $80,106,000.

Send comments on the Agency's need for this information, the accuracy of the provided burden estimates, and any suggested methods for minimizing respondent burden, including through the use of automated collection techniques to the following addresses. Please refer to EPA ICR No. 959.10 and OMB Control No. 2050–0033 in any correspondence.

Ms. Sandy Farmer, U.S. Environmental Protection Agency, OPPE Regulatory Information Division (2137), 401 M Street, SW, Washington, DC 20460. (or E-mail Farmer.Sandy@epamail.epa.gov)

and

Office of Information and Regulatory Affairs, Office of Management and Budget, Attention: Desk Officer for EPA, 725 17th Street, NW, Washington, DC 20503.

Dated: April 9, 1998.

Joseph Retzer,

Director, Regulatory Information Division.

[FR Doc. 98–10008 Filed 4–14–98; 8:45 am]

BILLING CODE 6560–50–U

ENVIRONMENTAL PROTECTION AGENCY

[AMS–FRL–5997–1]

California State Motor Vehicle Pollution Control Standards; Waiver of Federal Preemption—Notice of Waiver Decision and Within the Scope Determination; Notice of Correction and Republication and Opportunity for Public Hearing

AGENCY: Environmental Protection Agency.

ACTION: Notice Regarding Waiver of Federal Preemption and Within the Scope Determination and Opportunity for Public Hearing.

SUMMARY: On February 6, 1998, EPA published a Notice Regarding Waiver of Federal Preemption and Within the Scope Determination granting California a waiver of Federal preemption for certain motor vehicle emission standards and determining that certain amendments to its vehicle emission warranty statute and regulations were within the scope of previous waivers of Federal preemption. (63 FR 6173, February 6, 1998). Because of administrative error, this Notice was published before the Decision Document was signed by the Assistant Administrator for Air and Radiation, and thus the effective dates listed in the February 6 notice are incorrect. The Decision Document has now been signed, and EPA is announcing that decision in this **Federal Register** notice.

EPA is granting California a waiver of Federal preemption pursuant to section 209(b) of the Clean Air Act, as amended, 42 U.S.C. 7543(b) (Act), beginning in the 1998 model year to enforce amendments to its motor vehicle pollution control program which set new standards, and certification and test procedures for newly-established categories of ''Low-Emission'' medium-duty vehicles (MDVs). Additionally, EPA today has determined that California's amendments to its warranty statute and regulations for the 1994 and later model years for various motor vehicles are within the scope of previous waivers of Federal preemption granted pursuant to section 209(b) of the Act to adopt and enforce its revised emission standards and accompanying enforcement procedures for 1979 and later model year vehicles and engines. EPA received a request for a hearing on our within the scope determination contained in the February 6 publication and will consider that request as applying to today's notice as well. Although EPA is not required by the Act to offer a hearing on within the scope determinations, after receiving this hearing request, EPA has decided to offer the opportunity for a hearing regarding whether EPA should reconsider its determination.

DATES: EPA has tentatively scheduled a public hearing for May 8, 1998. Any person who wishes to testify on the record at the hearing must notify EPA in writing by April 24, 1998 that he or she will attend the hearing to present oral testimony regarding EPA's determination. If EPA receives one or more requests to testify, this hearing will be held. If EPA does not receive any requests to testify, this hearing will be canceled. Anyone who plans to attend the hearing should call Robert M. Doyle at (202) 564–9258 to determine if this hearing will be held. Regardless of whether or not a hearing is held, any party may submit written comments regarding EPA's determination by or before June 5, 1998.

ADDRESSES: If EPA receives one or more requests to testify, EPA will hold the May 8, 1998 public hearing announced above at EPA-Judiciary Square Building, first floor conference room, 501 3rd Street, NW., Washington, D.C. Any requests to testify at the public hearing, and/or any comments on the within the scope findings described above should be filed with Mr. Robert F. Montgomery, Manager, Engine Compliance Programs Group, Engine Programs and Compliance Division (6403J), U.S. Environmental Protection Agency, 401 M Street, SW, Washington DC 20460.

The Agency's decisions as well as all documents relied upon in reaching these decisions, including those submitted by the California Air Resources Board (CARB), are available for public inspection in the Air and Radiation Docket and Information Center during the working hours of 8:00 a.m. to 4:00 p.m. at the Environmental Protection Agency, Air Docket (6102), Room M–1500, Waterside Mall, 401 M Street, SW., Washington, DC 20460. All documents submitted in the Low-emission MDV waiver request can be found in Docket A–91–71; all documents submitted in the within the scope request for the warranty amendments, including the request for a hearing recently received, can be found in Docket A–91–16. Copies of the Decision Document (which discusses both the waiver and the within the scope determination) can be obtained from EPA's Engine Programs and Compliance Division by contacting Robert M. Doyle, as noted below, or can be accessed on the EPA Office of Mobile Sources Internet Home Page, also noted below.

FOR FURTHER INFORMATION CONTACT: Robert M. Doyle, Attorney/Advisor, Engine Programs and Compliance Division (6403J), U.S. Environmental Protection Agency, 401 M Street SW., Washington, DC 20460. Telephone: (202) 564–9258, FAX:(202) 565–2057, E-Mail: Doyle.Robert@EPAMAIL.EPA.GOV.

SUPPLEMENTARY INFORMATION:

I. Obtaining Electronic Copies of Documents

Electronic copies of this Notice and the accompanying Decision Document are available via the Internet on the Office of Mobile Sources (OMS) Home page (http://www.epa.gov/OMSWWW/). Users can find these documents by accessing the OMS Home Page and looking at the path entitled ''Regulations.'' This service is free of charge, except for any cost you already incur for Internet connectivity. The electronic **Federal Register** version of the Notice is made available on the day of publication on the primary Web site (http://www.epa.gov/docs/fedrgstr/EPA–AIR/).

Please note that due to differences between the software used to develop the documents and the software into which the documents may be downloaded, changes in format, page length, etc., may occur.

II. Procedures for Public Participation

Any party desiring to make an oral statement on the record at the tentatively scheduled public hearing should submit ten (10) copies, if feasible, of the proposed testimony and other relevant material to Mr. Robert F. Montgomery at the address listed above not later than May 1, 1998. In addition, the party should submit 15 copies, if feasible, of the planned statement to the presiding officer at the time of the hearing.

In recognition that a public hearing is designed to give interested parties an opportunity to participate in this proceeding, there are no adverse parties as such. Statements by participants will not be subject to cross-examination by

other participants without special approval by the presiding officer. The presiding officer is authorized to strike from the record statements which he or she deems irrelevant or repetitious or to impose reasonable limits on the duration of the statement of any participant.

If a hearing is held, the Agency will make a verbatim record of the proceedings. Interested parties may arrange with the reporter at the hearing to obtain a copy of the transcript at their own expense. Regardless of whether a hearing is held, EPA will keep the record open until June 5, 1998. Upon expiration of the comment period, EPA will make a final determination on the CARB within the scope request, based on the record of the public hearing (if any), relevant written submissions, and other information deemed pertinent.

Persons with comments containing proprietary information must distinguish such information from other comments to the greatest extent possible and label it as ''Confidential Business Information'' (CBI). If a person making comments wants EPA to base its decision in part on a submission labeled as CBI, then a nonconfidential version of the document which summarizes the key data or information should be submitted for the public docket. To ensure that CBI is not inadvertently placed in the docket, submissions containing such information should be sent directly to the contact person listed above, and not to the public docket. Information covered by a claim of confidentiality will be disclosed by EPA only to the extent allowed and by the procedures set forth in 40 CFR part 2. If no claim of confidentiality accompanies the submission when it is received by EPA, it made be made available to the public without further notice to the person making comments.

III. Low-Emission MDV Standards Waiver Request

I have decided to grant California a waiver of Federal preemption pursuant to section 209(b) of the Act for amendments to its motor vehicle pollution control program which will (1) establish three new categories of low-emission MDVs based on levels of exhaust emission standards; ''Low-Emission Vehicle'' (LEV), ''Ultra Low-Emission Vehicle'' (ULEV), and ''Zero-Emission Vehicle'' (ZEV); (2) require manufacturers to certify certain minimum percentages of LEV–MDVs and ULEV–MDVs beginning in the 1998 Model Year, reaching a maximum percentage requirement in Model Year 2003, and (3) establish production credit banking and trading provisions to offer flexibility to manufacturers unable to meet the minimum percentages.[1] A comprehensive description of the California low-emission standards and accompanying program can be found in the Decision Document for this waiver and in materials submitted to the Docket by California and other parties.

Section 209(b) of the Act provides that, if certain criteria are met, the Administrator shall waive Federal preemption for California to enforce new motor vehicle emission standards and accompanying enforcement procedures. The criteria include consideration of whether California arbitrarily and capriciously determined that its standards are, in the aggregate, at least as protective of public health and welfare as the applicable Federal standards; whether California needs State standards to meet compelling and extraordinary conditions; and whether California's amendments are consistent with section 202(a) of the Act.

CARB determined that these standards and accompanying enforcement procedures do not cause California's standards, in the aggregate, to be less protective of public health and welfare than the applicable Federal standards. Information presented to me by parties opposing California's waiver request did not demonstrate that California arbitrarily or capriciously reached this protectiveness determination. Therefore, I cannot find California's determination to be arbitrary or capricious.

CARB has continually demonstrated the existence of compelling and extraordinary conditions justifying the need for its own motor vehicle pollution control program, which includes the subject standards and procedures. No information has been submitted to demonstrate that California no longer has a compelling and extraordinary need for its own program. Therefore, I agree that California continues to have compelling and extraordinary conditions which require its own program, and, thus, I cannot deny the waiver on the basis of the lack of compelling and extraordinary conditions.

CARB has submitted information demonstrating that the requirements of its emission standards and test procedures are technologically feasible and present no inconsistency with Federal requirements and are, therefore, consistent with section 202(a) of the Act. Information presented to me by parties opposing California's waiver request did not satisfy the burden of persuading EPA that the standards are not technologically feasible within the available lead time, considering costs. Thus, I cannot find that California's amendments will be inconsistent with section 202(a) of the Act. Accordingly, I hereby grant the waiver requested by California.

My decision will affect not only persons in California but also the manufacturers outside the State who must comply with California's requirements in order to produce motor vehicles for sale in California. For this reason, I hereby determine and find that this is a final action of national applicability.

Under section 307(b)(1) of the Act, judicial review of this final action may be sought only in the United States Court of Appeals for the District of Columbia Circuit. Petitions for review must be filed by June 15, 1998. Under section 307(b)(2) of the Act, judicial review of this final action may not be obtained in subsequent enforcement proceedings.

As with past waiver decisions, this action is not a rule as defined by Executive Order 12866. Therefore, it is exempt from review by the Office of Management and Budget as required for rules and regulations by Executive Order 12866.

In addition, this action is not a rule as defined in the Regulatory Flexibility Act, 5 U.S.C. 601(2). Therefore, EPA has not prepared a supporting regulatory flexibility analysis addressing the impact of this action on small business entities.

Finally, the Administrator has delegated the authority to make determinations regarding waivers of Federal preemption under section 209(b) of the Act to the Assistant Administrator for Air and Radiation.

[1] The waiver request EPA grants today, which pertains to low-emission MDVs, is part of a comprehensive waiver request from California for its LEV program, which includes both light-duty vehicles (LDVs) such as passenger cars and light-duty trucks, and MDVs which are typically large trucks and other vehicles up to 14,000 lbs Gross Vehicle Weight Rating. On January 13, 1993 (58 FR 4166) EPA granted a waiver for the low-emission LDV component of California's program, and deferred action on the MDV component of the program (the subject of today's waiver). EPA chose to defer this action because at the time of the LEV waiver grant, an earlier waiver concerning MDVs (Docket A–91–55) was pending. This earlier request involved amendments to the California program which established new emission standards for MDVs in Model Year 1995 and beyond, and new accompanying certification and compliance test procedures and durability requirements. Because the low-emission MDV standards are amendments to the MDV standards considered in the request of Docket A–91–55, EPA needed to decide the earlier request before action on the low-emission MDV standards could be taken. On September 16, 1994 (announced in 59 FR 48625, September 22, 1994), EPA granted a waiver of Federal preemption to California's 1995 and beyond MDV standards.

IV. Warranty Amendments Within the Scope Request

I have determined that California's amendments to its warranty statute and regulations as applied in the 1994 model year and beyond are within the scope of previous waivers of Federal preemption granted pursuant to section 209(b) of the Act. The basis for this determination is described in detail in the Decision Document, which can be found in the docket for this action. The substantive amendments to the emission warranty requirements which are applicable under California state law to 1990 and subsequent model year passenger cars, light duty trucks and medium-duty vehicles require manufacturers to provide the following:

(1) *An emission-related ''defects warranty'' for three years or 50,000 miles.* The manufacturer must warrant that the vehicle is free from defects in materials and workmanship which cause the failure of a warranted part to be identical in all material respects to the part described in the application for certification. The emission-related parts that are defective within the period of warranty coverage must be repaired or replaced by the manufacturer at no cost to the vehicle owner. Thus it need not be shown that the defect causes the vehicle to exceed the applicable emission standards, in order to obtain such replacement or repair by the manufacturer without charge to the owner.

(2) *A seven year or 70,000 mile ''extended defects warranty'' for emission-related parts costing more than $300 to replace.* Manufacturers are required to identify those emission-related components on the existing Emissions Warranty Parts List that cost the consumer over $300 to replace as of the time of certification and to warranty those for a period of seven years/70,000 miles.

(3) *A ''performance warranty'' for three years or 50,000 miles, whichever first occurs.* Manufacturers must warrant the vehicle will pass an inspection and maintenance (SMOG CHECK) test. If a vehicle fails the SMOG CHECK test the manufacturer will be liable for the cost of the part, labor, diagnosis, and the SMOG CHECK retest to ensure the vehicle passes. The manufacturer would not be liable for the failure if it demonstrates that the failure was directly caused by abuse, neglect, or improper maintenance or repair.

(4) *A prescribed Introductory Statement for owners.* Manufacturers of all 1991 and subsequent model vehicles produced after January 24, 1991 must include in their warranty booklet a specified, standardized statement that explains in layman's terms the vehicle owner's rights and responsibilities regarding the emission control system warranty. The manufacturer's detailed warranty statement must follow this specified statement.

(5) *Common Nomenclature.* All emission-related service and certification documents, printed or updated by a manufacturer starting with the 1993 model year, must conform to the nomenclature and abbreviations in SAE publication J1930 ''Diagnostic Acronyms, Terms, and Definitions for Electrical/Electronic Systems''.

(6) The emission warranty requirements for vehicles and engines other than 1990 and subsequent model passenger cars, light-duty trucks, and medium-duty vehicles will be continued without substantial change. These requirements cover pre-1990 and subsequent model year motorcycles and heavy-duty vehicles and engines.

In a February 4, 1991 letter to EPA, CARB notified EPA of the above-described amendments to its warranty regulations affecting 1990 model year and later vehicles, and requested that EPA confirm that these amendments to its warranty statute and regulations, and new regulations requiring the use of common nomenclature in certification and in-use documentation are within the scope of existing waivers of Federal preemption.[2] The Executive Officer stated that ''[t]he regulations do not undermine the Board's prior determination that the state standards are, in the aggregate, at least as protective of public health and welfare as applicable Federal standards.''[3] This statement, however, referred to a finding made by the Board before the passage of the Federal Clean Air Act Amendments of 1990 (CAAA), which required that EPA promulgate new, more stringent Federal tailpipe emission standards for light-duty vehicles and light-duty trucks beginning in the 1994 model year.[4]

In its February 1991 request, CARB compared the California standards and the Federal standards as they stood prior to the CAAA; the Board did not consider the protectiveness of the California standards as compared to the new standards made applicable by the CAAA. Consequently, California, at the time of its request had not made an initial determination, that its standards, in the aggregate, are as protective of public health and welfare as comparable Federal standards (including Tier 1) which apply in the 1994 and later model years.

On October 4, 1991, California requested a waiver of Federal preemption for its LEV program standards, which under California state law are applicable to 1994 and later model year vehicles (which also is when the phase-in of the new Federal Tier 1 standards begins).[5] In this request, California made a protectiveness finding with regard to the California standards as applicable to the 1994 and later model years compared to the applicable Federal standards (including Tier 1) as a basis for the waiver request addressing LEV standards. Because California had not made an initial determination that its standards, in the aggregate, are as protective of public health and welfare as comparable Federal standards (including Tier 1) which apply in the 1994 and later model years in the earlier (February 1991) warranty request, CARB acknowledged, in its October 1991 request for a waiver for its LEV standards, the possibility that EPA may address the warranty amendments that were part of the February 1991 request as they apply only through the 1993 model year.[6]

EPA announced, on August 14, 1992, its determination that California's amendments to its warranty program were within the scope of previous waivers only through the 1993 model year.[7] EPA also stated that, provided California was granted a waiver of

[2] Letter from James D. Boyd, Executive Officer, CARB, to William K. Reilly, Administrator, EPA, dated February 4, 1991, at 2 (hereinafter ''CARB letter'').

[3] CARB letter at 5.

[4] The CAAA were signed into law on November 15, 1990. New certification and new in-use tailpipe emission standards for all light-duty vehicles and light-duty trucks, commonly referred to as Tier 1 standards, were prescribed in section 203 of the Amendments, which added new sections 202(g) and 202(h) to the Clean Air Act (CAA). On June 5, 1991 EPA published the Final Rule implementing the Tier 1 standards in the **Federal Register** at 56 FR 25724. In addition, section 202(j) of the Act requires promulgation of a Cold CO standard. 58 FR 9468 (July 19, 1993).

In addition, the Federal warranty requirements also changed beginning in the 1995 model year. The CAAA significantly modified the Federal light-duty requirements. Prior to the amendments the period of warranty coverage was generally 5 years/50,000 miles. The CAAA, beginning in the 1995 model year, shorten the basic defects warranty period to 2 years/24,000 miles but extend it to eight years/80,000 miles in the case of catalytic converters, electronic emissions control units, onboard diagnostic (OBD) devices, and other pollution control devices that meet certain criteria and are designated by the Administrator as a ''specified major emission control component.'' CAA Section 207(i).

[5] California Proposed Regulations for Low Emission Vehicle Standards and Clean Fuels (August 13, 1990). Letter from James D. Boyd, Executive Officer, CARB, to William K. Reilly, Administrator, EPA, dated October 4, 1991.

[6] Letter from James D. Boyd, Executive Officer, CARB, to William K. Reilly, Administrator, EPA, dated October 4, 1991, p. 10, footnote 14.

[7] 57 FR 38502 (August 25, 1992).

Federal preemption for its LEV standards, the warranty regulations which were the subject of CARB's request for a within-the-scope determination would continue to be within the scope of existing waivers beyond the 1993 model year so long as they (1) do not undermine California's determination that its standards, in the aggregate, are as protective of public health and welfare as comparable Federal standards (2) do not affect the consistency of California's requirements with section 202(a) of the Act, and (3) raise no new issues affecting EPA's previous waiver determinations.

On January 7, 1993, EPA granted a waiver of Federal preemption for the low-emission LDV component of California's LEV program.[8] EPA also has waived Federal preemption for California's standards applicable to 1995 and later model year MDVs.[9] In today's decision, EPA waives preemption for California's MDV standards for 1998 and later model year vehicle and engines which are part of the LEV Program. EPA has previously determined that California's earlier emission warranty regulations were within the scope of previous waivers.[10] Consistent with these previous determinations, EPA now has determined that emission warranty regulations, which are the subject of CARB's February 4, 1991 letter, as applied through the 1994 model year and beyond to passenger cars, light-duty trucks and medium-duty vehicles and engines, are within the scope of earlier waivers granted for standards.

With regard to the 1994 and later model years, these amendments do not undermine California's determination that its standards, in the aggregate are as protective of public health and welfare as comparable Federal standards, are not inconsistent with section 202(a) of the Act, and raise no new issues affecting the EPA's previous waiver determination. Thus these amendments are within the scope of previous waivers determinations.[11] A full explanation of EPA's decision is contained in a determination document which may be obtained from EPA as noted above.

My decision will affect not only persons in California but also the manufacturers outside the State who must comply with California's requirements in order to produce motor vehicles for sale in California. For this reason, I hereby determine and find that this is a final action of national applicability.

As with past waiver decisions, this action is not a rule as defined by Executive Order 12866. Therefore, it is exempt from review by the Office of Management and Budget as required for rules and regulations by Executive Order 12866.

In addition, this action is not a rule as defined in the Regulatory Flexibility Act, 5 U.S.C. sec. 601(2). Therefore, EPA has not prepared a supporting regulatory flexibility analysis addressing the impact of this action on small business entities.

Finally, the Administrator has delegated the authority to make determinations regarding waivers of Federal preemption under section 209(b) of the Act to the Assistant Administrator for Air and Radiation.

Dated: April 6, 1998.

Richard D. Wilson,

Acting Assistant Administrator for Air and Radiation.

[FR Doc. 98–10010 Filed 4–14–98; 8:45 am]

BILLING CODE 6560–50–P

[8] 58 FR 4166 (January 13, 1993).

[9] 59 FR 48625 (September 22, 1994).

[10] 37 FR 14831 (July 25, 1972); 44 FR 61096 (October 23, 1979); 51 FR 12391 (March 26, 1986); 51 FR 15961 (April 22, 1986).

[11] *Id.*

ENVIRONMENTAL PROTECTION AGENCY

[FRL–5996–3]

Notice of Proposed Assessment of Clean Water Act Class I Administrative Penalty to Campbell Soup Company and opportunity to comment

AGENCY: Environmental Protection Agency.

ACTION: Notice of proposed administrative penalty assessment and opportunity to comment.

SUMMARY: EPA is providing notice of proposed administrative penalty assessment for alleged violations of the Clean Water Act. EPA is also providing notice of opportunity to comment on the proposed assessment.

Under 33 U.S.C. 1319(g), EPA is authorized to issue orders assessing civil penalties for various violations of the Act. EPA may issue these orders after the commencement of either a Class I or Class II penalty proceeding. EPA provides public notice of the proposed assessments pursuant to 33 U.S.C. 1319(g)(4)(a).

Class I proceedings are conducted under EPA's proposed Consolidated Rules of Practice Governing the Administrative Assessment of Civil Penalties and the Revocation and Suspension of Permits, 40 CFR Part 22. The procedures through which the public may submit written comment on a proposed Class I order or participate in a Class I proceeding, and the Procedures by which a Respondent may request a hearing, are set forth in the Consolidated Rules. The deadline for submitting public comment on a proposed Class I order is thirty days after publication of this notice.

On the date identified below, EPA commenced the following Class I proceeding for the assessment of penalties:

In the Matter of Campbell Soup Company, located at 6200 Franklin Boulevard, Sacramento, California 95824; EPA Docket No. CWA–IX–FY98–01; filed on April 2, 1998, with Ms. Danielle Carr, Regional Hearing Clerk, U.S. EPA, Region 9, 75 Hawthorne Street, San Francisco, California 94105, (415) 744–1391; proposed penalty of $10,445 for failure to submit self-monitoring reports with toxic organics results in 1995, 1996 and part of 1997.

FOR FURTHER INFORMATION: Persons wishing to receive a copy of EPA's Consolidated Rules, review of the complaint or other documents filed in this proceeding, comment upon a proposed assessment, or otherwise participate in the proceeding should contact the Regional Hearing Clerk identified above. The administrative record for this proceeding is located in the EPA Regional Office identified above, and the file will be open for public inspection during normal business hours. All information submitted by the respondent is available as part of the administrative record, subject to provisions of law restricting public disclosure of confidential information. In order to provide opportunity for public comment, EPA will issue no final order assessing a penalty in these proceedings prior to thirty (30) days after the date of publication of this notice.

Dated: August 6, 1998.

Alexis Strauss,

Acting Director, Water Division, Region IX.

[FR Doc. 98–10004 Filed 4–14–98; 8:45 am]

BILLING CODE 6560–50–U

ENVIRONMENTAL PROTECTION AGENCY

[FRL–5997–3]

Underground Injection Control Program; Hazardous Waste Land Disposal Restrictions

AGENCY: Environmental Protection Agency (EPA).

ACTION: Notice of approval of application for a case-by-case extension

of land disposal restrictions effective date.

SUMMARY: EPA has approved the request from DuPont Sabine River Works Facility (DuPont or Facility) for a one year extension of the April 8, 1998, effective date of the RCRA land disposal restrictions (LDR) treatment standards applicable to wastewaters with the hazardous waste code D018 (Benzene). This action responds to a case-by-case extension request submitted by DuPont under 40 CFR 148.4 according to procedures set out in 40 CFR 268.5, which allow an owner or operator of a Class I hazardous waste injection well to request that the Administrator grant, on a case-by-case basis, an extension of the applicable effective date. To be granted such a request, the applicant must demonstrate, among other things, that there is insufficient capacity to manage its waste and that they have entered into a binding contractual commitment to construct or otherwise provide such capacity, but due to circumstances beyond their control, such capacity could not reasonably be made available by the effective date. As a result of this action, DuPont can continue to inject wastewaters that contain D018 into the Class I hazardous waste injection wells located at the Sabine River Works, Orange, Texas facility until April 8, 1999. If warranted, EPA may grant a renewal of this extension, for up to one additional year, which, if requested and granted, would extend the effective date of the LDR for D018 (Benzene) to April 8, 2000.

EFFECTIVE DATE: This approved case-by-case extension of the LDR became effective April 7, 1998.

ADDRESSES: The docket for this action is located at the Environmental Protection Agency, Region 6, Water Quality Protection Division, Source Water Protection Branch, Ground Water/UIC Section (6WQ–SG), 1445 Ross Avenue, Dallas, Texas 75202–2733. The public can review all docket materials by visiting the EPA Region 6 Office during normal business hours, 8:00 a.m. through 4:00 p.m., Monday through Friday.

FOR FURTHER INFORMATION: Contact Philip Dellinger, Chief, Ground Water/UIC Section, Source Water Protection Branch, EPA Region 6, 1445 Ross Avenue, Dallas, Texas 75202–2733 or telephone (214) 665–7165.

SUPPLEMENTARY INFORMATION:

I. Background

A. Congressional Mandate

Congress enacted the Hazardous and Solid Waste Amendments (HSWA) of 1984 to amend the Resource Conservation and Recovery Act (RCRA), to impose additional responsibilities on persons managing hazardous wastes. Among other things, HSWA required EPA to develop regulations that would impose restrictions on the land disposal of hazardous wastes. In particular, Sections 3004 (d) through (g) prohibit the land disposal of certain hazardous wastes by specified dates in order to protect human health and the environment except that wastes which meet treatment standards established by EPA are not prohibited and may be land disposed. Section 3004(m) requires EPA to set ''levels or methods of treatment, if any, which substantially diminish the toxicity of the waste or substantially reduce the likelihood of migration of hazardous constituents from the waste so that short-term and long-term threats to human health and the environment are minimized.'' Subsections 3004 (d), (e), (f) and (g) also allow the applicant to demonstrate that there will be no migration of hazardous constituents from the disposal unit or injection zone for as long as the wastes remain hazardous. The no migration petition process for injected hazardous wastes is set out at 40 CFR Part 148 Subpart C.

In developing such a broad program, Congress recognized that adequate alternative treatment, recovery, or disposal capacity which is protective of human health and the environment, may not be available by the applicable statutory effective dates. Section 3004(h)(2) authorizes EPA to grant a variance (based on the earliest dates that such capacity will be available, but not to exceed two years) from the effective date which would otherwise apply to specific hazardous wastes. In addition, under Section 3004(h)(3), EPA is authorized to grant an additional capacity extension of the applicable deadline on a case-by-case basis for up to one year. Such an extension is renewable once for up to one additional year.

On November 7, 1986, EPA published a final rule (51 FR 40572) establishing the regulatory framework to implement the land disposal restrictions program, including the procedures for submitting case-by-case extension applications.

On April 8, 1996, EPA published a final rule (61 FR 15566), establishing treatment standards under the land disposal restrictions (LDR) program for certain listed hazardous wastes, including D018 (Benzene). Because of a determination that available treatment, recovery, or disposal (TRD) capacity did not exist at that time for D018 wastewaters that are underground injected, EPA granted a two-year national capacity variance for these wastes. The variance will expire April 8, 1998.

EPA approved DuPont's no migration demonstration under 40 CFR Part 148 Subpart C on September 10, 1991. DuPont submitted a petition reissuance request in October 1997. This reissuance request, if approved, would allow the continued underground injection of the two wastestreams with the hazardous waste code D018 (Benzene) into WDW–54 and WDW–282. EPA has completed the review of this request and has found it to be technically sound. Recently one of the wells at the DuPont facility developed a mechanical integrity problem and is in the process of being repaired. Once the mechanical integrity of this well has been reestablished and EPA has confirmed that the well has mechanical integrity, then EPA can propose approval of DuPont's reissuance request. Unfortunately the time required to do the repair work and to proceed through the administrative process of the reissuance will extend past the land disposal restriction effective date of April 8, 1998.

B. Applicant's Demonstrations Under 40 CFR 268.5 for Case-by-Case Extension

When it became apparent that DuPont's reissuance request could not be processed by the land disposal restriction effective date, they submitted a case-by-case extension request to allow continued injection of D018 wastewaters until April 8, 1999. This request, which was submitted on February 16, 1998, documented their need for the extension and included their justification for a case-by-case extension approval. DuPont's request letter is part of the docket. On March 2, 1998 (40 CFR 10219), EPA proposed to grant this request. EPA received no comments on this proposal.

Case-by-case extension applications must satisfy the requirements outlined in 40 CFR 268.5. In its proposal, EPA discussed each of the seven demonstrations of 40 CFR 268.5(a)(1)–(7) made by DuPont. Readers should refer to that discussion for EPA's reasoning on these points.

II. Response to Comments

EPA received no comments on the March 2, 1998 (63 FR 10219), case-by-case extension proposal.

III. Consultation With State

In accordance with 40 CFR 268.5(e), EPA consulted with the State of Texas (Texas Natural Resource Conservation Commission) to determine if the State had any permitting, enforcement, or other concerns regarding this facility

that EPA should take into consideration in deciding to approve or deny DuPont's application for a case-by-case extension of the LDR effective date. The State of Texas had no substantive issues for EPA to consider in evaluating DuPont's extension request.

IV. EPA's Action

For the reasons discussed above, the Agency believes that DuPont has satisfied all the requirements for a case-by-case extension to the April 8, 1998, effective date of the RCRA land disposal restrictions (LDR) treatment standards applicable to wastewaters with the hazardous waste code D018 (Benzene). Therefore, EPA is approving DuPont's requested case-by-case extension for a one year period. If during this time frame a final decision on DuPont's petition reissuance request is made, then this case-by-case extension will expire.

Dated: April 7, 1998.

William B. Hathaway,

Director, Water Quality Protection Division (6WQ), EPA Region 6.

[FR Doc. 98–10012 Filed 4–14–98; 8:45 am]

BILLING CODE 6560–50–P

ENVIRONMENTAL PROTECTION AGENCY

[FRL–5996–1]

Open Meeting of the Environmental Financial Advisory Board on May 5, 1998

AGENCY: Environmental Protection Agency (EPA).

ACTION: Notice.

SUMMARY: The Environmental Financial Advisory Board (EFAB) will hold an open meeting on a proposed Environmental Bond Guaranty program for the New Independent States of the former Soviet Union (NIS). This program would create a $100 million fund to enhance the credit of municipal bonds issued in the NIS by guarantying financial obligations undertaken by NIS regional or local governments (or those formally acting on behalf of such governments) for capital projects providing environmental infrastructure that serve the general public. Types of environmental infrastructure projects covered may include, but not be limited to, drinking water purification or distribution, wastewater collection or treatment, solid or hazardous disposal waste, the efficient generation or use of energy, and air pollution abatement.

The meeting is scheduled for May 5, 1998 in the Zenger Room at the National Press Club Building, 526 14th St., NW., 13th Floor, Washington, DC. The meeting will run from 9:00 a.m.–3:00 p.m.

EFAB is a federally chartered advisory board that provides analysis and advice to the U.S. Environmental Protection Agency (EPA) on environmental finance issues. EFAB has been asked by the EPA's Office of International Activities to review and comment on the guaranty fund concept. As part of EFAB's review, this meeting will solicit public comment and facilitate discussion of the best approaches to encourage the financing of environmental projects in the NIS.

A draft feasibility study on the Environmental Bond Guaranty program is available on EPA's web site at http://www.epa.gov/efinpage/partcont.htm. Summaries of the study in hard copy form are available by contacting the numbers listed below. Written comments are welcome at United States Environmental Protection Agency, Environmental Finance Program, 401 M St. SW., Mail Code 2731R, Washington, DC 20460.

Several invited speakers will make presentations and the public is welcome, but seating is limited. Parties who wish to provide remarks should contact Michael Segal at (202) 564–2211 or Tim McProuty at (202) 564–4996 of the Environmental Finance Program.

Dated: April 9, 1998.

Michael Ryan,

Comptroller.

[FR Doc. 98–10003 Filed 4–14–98; 8:45 am]

BILLING CODE 6560–50–M

ENVIRONMENTAL PROTECTION AGENCY

[OPP–00514A; FRL–5777–1]

FIFRA Scientific Advisory Panel, Appointments

AGENCY: Environmental Protection Agency (EPA).

ACTION: Notice.

SUMMARY: Notice is given of the appointment of three new members to the Federal Insecticide, Fungicide, and Rodenticide Act (FIFRA) Scientific Advisory Panel established pursuant to section 25(d) of FIFRA. Public notice of nominees along with a request for public comments appeared in the **Federal Register** of December 5, 1997.

FOR FURTHER INFORMATION CONTACT: By mail: Larry C. Dorsey, Designated Federal Official, FIFRA Scientific Advisory Panel (7501C), Office of Pesticide Programs, Environmental Protection Agency, 40l M St., SW., Washington, DC 20460, Office location, telephone number, and e-mail address: Rm. 815B, CM #2, 1921 Jefferson Davis Highway, Arlington, VA 22203, Telephone: (703) 305–5369 or 305–7351, e-mail address: dorsey.larry@epamail.epa.gov.

SUPPLEMENTARY INFORMATION: Congress mandated that the Scientific Advisory Panel would consist of seven members selected from candidates nominated by the National Science Foundation (NSF) and the National Institutes of Health (NIH). Congress also mandated that the terms of appointment would be staggered. A list of nominees, including biographical data, appeared in the **Federal Register** of December 5, 1997 (62 FR 64371) (FRL–57758–6). Comments about several nominees and suggestions for additional nominees were received from the U.S. House of Representatives, Committee on Agriculture; the Natural Resources Defense Council; the Children's Environmental Health Network; and Zeneca Ag Products, in response to this Notice. The purpose of this Notice is to announce the appointment of Dr. Fumio Matsumura, Dr. Herbert Needleman, and Dr. Christopher Portier as members of the FIFRA Scientific Advisory Panel. Dr. Matsumura is Chair of the Department of Toxicology at the University of California at Davis; he will provide the experience and technical background needed in the area of the environmental health sciences. Dr. Needleman is Professor of Pediatrics at the University of Pittsburgh School of Medicine; he will provide expertise in the area of pediatric medicine. Dr. Christopher Portier is Head of the Toxicokinetics Faculty at the National Institute of Environmental Health Sciences in Research Triangle Park, NC; his background in mathematics and biostatistics will provide the Panel with expertise in biostatistics and human health risk assessment methodology.

The decision to appoint Drs. Matsumura, Neeedleman, and Portier is based upon several additional factors: Dr. Matsumura's extensive experience in the toxicology of pesticides and related chemicals; Dr. Needleman's focus on the effects of lead, drugs, and other pollutants on children; and Dr. Portier's experience in the analysis of such diverse risks to human health as dioxin, Agent Orange, and polychlorinated biphenyls.

Meetings of the Scientific Advisory Panel are announced in the **Federal Register** at least 15 days prior to each meeting, in accordance with the directives of the Federal Advisory Committee Act.

List of Subjects

Environmental protection.

Dated: April 2, 1998.

Lynn R. Goldman

Assistant Administrator for Prevention, Pesticides and Toxic Substances.

[FR Doc. 98–10017 Filed 4–14–98; 8:45 am]

BILLING CODE 6560–50–F

ENVIRONMENTAL PROTECTION AGENCY

[FRL–5996–9]

Water Conservation Plan Guidelines Subcommittee Meeting

AGENCY: Environmental Protection Agency (EPA).

ACTION: Notice.

SUMMARY: On May 4, 1998, the Water Conservation Plan Guidelines Subcommittee of the Local Government Advisory Committee (LGAC) will hold a meeting in Washington, D.C. The Subcommittee will develop its final recommendations for advice and guidance to the Agency on the water conservation plan guidelines for public water systems, including the section of the draft guidelines which provides information to States on implementation of the guidelines. Section 1455 of the Safe Drinking Water Act, as amended, requires EPA to publish guidelines for water conservation plans for three size ranges of public water systems. States may require water systems to submit a water conservation plan consistent with EPA's guidelines as a condition of receiving a loan from a State Drinking Water Loan Fund. The Subcommittee meeting is open and all interested persons are invited to attend on a space-available basis. Members of the public interested in attending the Subcommittee meeting should call the Designated Federal Official to reserve space.

DATES: The Subcommittee meeting will be held from 8:30 a.m. to 5:00 p.m. on Monday, May 4, 1998.

ADDRESSES: The meeting will be held at the Environmental Protection Agency, Washington Information Center, Conference Room 3 North, 401 M Street, S.W., Washington, D. C. 20460. Requests for a summary of the meeting can be obtained by writing to John E. Flowers, Environmental Protection Agency, Office of Wastewater Management (Mail Code 4204), 401 M Street, S.W., Washington, D.C. 20460.

FOR FURTHER INFORMATION CONTACT: The Designated Federal Official for this Subcommittee is John E. Flowers. He is the point of contact for information concerning any Subcommittee matters and can be reached by calling (202) 260–7288.

Dated: April 10, 1998.

Michael B. Cook,

Director, Office of Wastewater Management.

[FR Doc. 98–10009 Filed 4–14–98; 8:45 am]

BILLING CODE 6560–50–U

ENVIRONMENTAL PROTECTION AGENCY

[OPP–30449; FRL–5777–6]

Certain Companies; Applications to Register Pesticide Products

AGENCY: Environmental Protection Agency (EPA).

ACTION: Notice.

SUMMARY: This notice announces receipt of applications to register pesticide products containing new active ingredients not included in any previously registered products pursuant to the provisions of section 3(c)(4) of the Federal Insecticide, Fungicide, and Rodenticide Act (FIFRA), as amended.

DATES: Written comments must be submitted by May 15, 1998.

ADDRESSES: By mail, submit written comments identified by the document control number [OPP–30449] and the file symbols to: Public Information and Records Intregrity Branch, Information Resources and Services Division (7502C), Office of Pesticide Programs, Environmental Protection Agency, 401 M St., SW., Washington, DC 20460. In person, bring comments to: Environmental Protection Agency, Rm. 119, CM #2, 1921 Jefferson Davis Hwy., Arlington, VA.

Comments and data may also be submitted electronically to: opp-docket@epamail.epa.gov. Follow the instructions under ''SUPPLEMENTARY INFORMATION.'' No Confidential Business Information (CBI) should be submitted through e-mail.

Information submitted as a comment concerning this notice may be claimed confidential by marking any part or all of that information as CBI. Information so marked will not be disclosed except in accordance with procedures set forth in 40 CFR part 2. A copy of the comment that does not contain CBI must be submitted for inclusion in the public record. Information not marked confidential may be disclosed publicly by EPA without prior notice. The public docket is available for public inspection in Rm. 119 at the Virginia address given above, from 8:30 a.m. to 4 p.m., Monday through Friday, excluding holidays.

FOR FURTHER INFORMATION CONTACT: By mail: Marion Johnson, Product Manager (PM-03), Registration Division (7505C), Office of Pesticide Programs, Environmental Protection Agency, 401 M St., SW., Washington, DC 20460. Office location, telephone number, and e-mail address: Rm. 200, CM #2, 1921 Jefferson Davis Highway, Arlington, VA 22202, (703 305–6788, e-mail: johnson.marion@epamail.epa.gov.

SUPPLEMENTARY INFORMATION: EPA received applications as follows to register pesticide products containing active ingredients not included in any previously registered products pursuant to the provision of section 3(c)(4) of FIFRA. Notice of receipt of these applications does not imply a decision by the Agency on the applications.

Products Containing Active Ingredients Not Included In Any Previously Registered Products

1. File Symbol: 45639–ERG. Applicant: Agrevo USA Company, Little Falls Centre One, 2711 Centerville Rd., Wilmington, DE 19808. Product Name: Applaud 70WP Insect Growth Regulator. Insecticide. Active ingredient: Buprofezin: (2-*tert*-butylimino-3-isopropyl-5-phenyl-1,3,5-thiadiazinan-4-one) at 70 percent. Proposed classification/Use: General. For use to control the nymph stage of whiteflies by inhibiting chitin biosynthesis on lettuce, melons, cucumbers, pumpkins, and squash.

2. File Symbol: 352–LOU. Applicant: E.I. Du Pont de Nemours Company, Agricultural Products, P.O. Box 80038, Wilmington, DE 19880–0038. Product Name: DPX-MP062. Manufacturing Use Product/Insecticide. Active ingredient: (*S*)-methyl 7-chloro-2,5-dihydro-2-[[(methoxycarbonyl)[4-(trifluoromethoxy)phenyl]amino]-carbonyl]indeno[1,2-e][1,3,4]oxadiazine-4a(3*H*)-carboxylate at 52.7 percent. Proposed classification/Use: None. For formulation purposes only.

3. File Symbol: 352–LOI. Applicant: E.I. Du Pont de Nemours Co. Product Name: DPX-MP062 SC. Insecticide. Active ingredient: (*S*)-methyl 7-chloro-2,5-dihydro-2-[[(methoxycarbonyl)[4-(trifluoromethoxy)phenyl]amino]-carbonyl]indeno[1,2-e][1,3,4]oxadiazine-4a(3*H*)-carboxylate at 15 percent. Proposed classification/Use: None. For agricultural crop use to control certain pests.

4. File Symbol: 352–LOT. Applicant: E.I. Du Pont de Nemours Co. Product Name: DPX-MP062 WG. Insecticide. Active ingredient: (*S*)-methyl 7-chloro-2,5-dihydro-2-[[(methoxycarbonyl)[4-(trifluoromethoxy) phenyl]amino]-

carbonyl]indeno[1,2-e][1,3,4]oxadiazine-4a(3*H*)-carboxylate at 30 percent. Proposed classification/Use: None. For agricultural crop use to control certain pests.

5. File Symbol: 3125–LRE. Applicant: Bayer Corporation, Agricultural Division, 8400 Hawthorn Road, Kansas City, MO 64120–0013. Product Name: KBR 3023 Technical. Insect Repellent. Active ingredient: Propidine: 1-methylpropyl-(2-hydroxyethyl)-1-piperidine carboxylate at 96.8 percent. Proposed classification/Use: General. For formulation into end-use, dermally applied insect repellent products.

6. File Symbol: 3125–LRN. Applicant: Bayer Corporation. Product Name: KBR 3023 All-Family Insect Repellent Cream. Insect Repellent. Active ingredient: Propidine: 1-methylpropyl-(2-hydroxyethyl)-1-piperidine carboxylate at 20 percent. Proposed classification/Use: General. For use to be applied directly to human skin to repel mosquitoes, ticks, biting flies, gnats, chiggers, and fleas.

7. File Symbol: 3125–LRR. Applicant: Bayer Corporation. Product Name: KBR 3023 All-Family Insect Repellent Spray. Insect Repellent. Active ingredient: Propidine: 1-methylpropyl-(2-hydroxyethyl)-1-piperidine carboxylate at 20 percent. Proposed classification/Use: General. For use to be applied directly to human skin to repel mosquitoes, ticks, biting flies, gnats, chiggers, and fleas.

Notice of approval or denial of an application to register a pesticide product will be announced in the **Federal Register**. The procedure for requesting data will be given in the **Federal Register** if an application is approved.

Comments received within the specified time period will be considered before a final decision is made; comments received after the time specified will be considered only to the extent possible without delaying processing of the application.

The official record for this notice, as well as the public version, has been established for this notice under docket number [OPP–30449] (including comments and data submitted electronically as described below). A public version of this record, including printed, paper versions of electronic comments, which does not include any information claimed as CBI, is available for inspection from 8:30 a.m. to 4 p.m., Monday through Friday, excluding legal holidays. The official notice record is located at the address in ''ADDRESSES'' at the beginning of this document.

Electronic comments can be sent directly to EPA at:

opp-docket@epamail.epa.gov

Electronic comments must be submitted as an ASCII file avoiding the use of special characters and any form of encryption. Comment and data will also be accepted on disks in Wordperfect 5.1/6.1 or ASCII file format. All comments and data in electronic form must be identified by the docket number [OPP–30449]. Electronic comments on this notice may be filed online at many Federal Depository Libraries.

Authority: 7 U.S.C. 136.

List of Subjects

Environmental protection, Pesticides and pest, Product registration.

Dated: April 1, 1998.

James Jones,

Director, Registration Division, Office of Pesticide Programs.

[FR Doc. 98–9393 Filed 4–14–98; 8:45 am]

BILLING CODE 6560–50–F

ENVIRONMENTAL PROTECTION AGENCY

[OPP–30451A; FRL–5783–3]

Applications to Register Pesticide Products; Correction

AGENCY: Environmental Protection Agency (EPA).

ACTION: Notice; correction.

SUMMARY: In the **Federal Register** of March 24, 1998 (63 FR 14114) (FRL–5780–3) EPA issued notice of receipt of applications to register pesticide products. The applications were submitted by S.C. Johnson and Son, Inc., and Agrium U.S. Inc. EPA is correcting these applications to add information that was inadvertently omitted from the original publication. EPA is also establishing a new comment period for these applications to allow the required 30 days.

DATES: Comments, identified by the docket control number [OPP–30451A], must be received on or before May 15, 1998.

FOR FURTHER INFORMATION CONTACT: The Regulatory Action Leader listed in the table below:

Regulatory Action Leader	Office location/telephone number	Address
Denise Greenway	5th Floor, CS #1, 703–308–8263, e-mail: greenway.denise@epamail.epa.gov.	2800 Crystal Drive, Arlington, VA 22202
John Tice	Rm. 5-W43, CS #1, 703–308–8295, e-mail: tice.john@epamail.epa.gov.	Do.

SUPPLEMENTARY INFORMATION: In FR Doc. 98-7645, in the issue for Tuesday, March 24, 1998, at page 14114, starting in the second column, items 1 and 2, under the heading ''*Products Containing Active Ingredients Not Included In Any Previously Registered Products*,'' are corrected to read as follows:

1. File Symbol: 70724–R. Applicant: Agrium U.S. Inc., South Ulster St., Suite 1400, Denver, CO 80237. Product Name: FTG™. Microbial pest control agent. Active ingredient: *Burkholderia cepacia* strain Ral-3 at 1.96 percent. Proposed classification/Use: General. For commercial application to seed and/or seedlings of conifers and deciduous trees; intended for indoor use only. This application is the subject of a joint review with the Pest Management Regulatory Agency of Health Canada. (D. Greenway)

2. File Symbol: 4822–UOO. Applicant: S.C. Johnson and Son, Inc., 5125 Howe St., Racine, WI 53403–2236. Product Name: Granola 97. Manufacturing Use Product. Active ingredient: p-Menthane-3,8-diol at 99.0 percent. Proposed classification/Use: General. For manufacturing of insect repellent products. (J. Tice)

List of Subjects

Environmental protection, Pesticides and pests, Product registration.

Dated: April 1, 1998.

Janet L. Andersen,

Director, Biopesticides and Pollution Prevention Division, Office of Pesticide Programs.

[FR Doc. 98–9675 Filed 4–14–98; 8:45 a.m.]

BILLING CODE 6560–50–F

ENVIRONMENTAL PROTECTION AGENCY

[PF–801; FRL–5781–9]

Notice of Filing of Pesticide Petitions

AGENCY: Environmental Protection Agency (EPA).

ACTION: Notice.

SUMMARY: This notice announces the initial filing of pesticide petitions proposing the establishment of regulations for residues of certain pesticide chemicals in or on various food commodities.

DATES: Comments, identified by the docket control number PF–801, must be received on or before May 15, 1998.

ADDRESSES: By mail submit written comments to: Public Information and Records Integrity Branch, Information Resources and Services Division (7502C), Office of Pesticides Programs, Environmental Protection Agency, 401 M St., SW., Washington, DC 20460. In person bring comments to: Rm. 119FF, CM #2, 1921 Jefferson Davis Highway, Arlington, VA.

Comments and data may also be submitted electronically by following the instructions under ''SUPPLEMENTARY INFORMATION.'' No confidential business information should be submitted through e-mail.

Information submitted as a comment concerning this document may be claimed confidential by marking any part or all of that information as ''Confidential Business Information'' (CBI). CBI should not be submitted through e-mail. Information marked as CBI will not be disclosed except in accordance with procedures set forth in 40 CFR part 2. A copy of the comment that does not contain CBI must be submitted for inclusion in the public record. Information not marked confidential may be disclosed publicly by EPA without prior notice. All written comments will be available for public inspection in Rm. 1132 at the address given above, from 8:30 a.m. to 4 p.m., Monday through Friday, excluding legal holidays.

FOR FURTHER INFORMATION CONTACT: The product manager listed in the table below:

Product Manager	Office location/telephone number	Address
Sidney Jackson (PM 5)	Rm. 268, CM #2, 703–305–7610, e-mail:jackson.sidney@epamail.epa.gov.	1921 Jefferson Davis Hwy, Arlington, VA
Bipin Gandhi (PM 5)	Rm. 4W53, CS #2, 703–308–8380, e-mail: gandhi.bipin@epamail.epa.gov.	Do.

SUPPLEMENTARY INFORMATION: EPA has received pesticide petitions as follows proposing the establishment and/or amendment of regulations for residues of certain pesticide chemicals in or on various food commodities under section 408 of the Federal Food, Drug, and Comestic Act (FFDCA), 21 U.S.C. 346a. EPA has determined that these petitions contain data or information regarding the elements set forth in section 408(d)(2); however, EPA has not fully evaluated the sufficiency of the submitted data at this time or whether the data support granting of the petition. Additional data may be needed before EPA rules on the petition.

The official record for this notice of filing, as well as the public version, has been established for this notice of filing under docket control number [PF–801] (including comments and data submitted electronically as described below). A public version of this record, including printed, paper versions of electronic comments, which does not include any information claimed as CBI, is available for inspection from 8:30 a.m. to 4 p.m., Monday through Friday, excluding legal holidays. The official record is located at the address in ''ADDRESSES'' at the beginning of this document.

Electronic comments can be sent directly to EPA at:

opp-docket@epamail.epa.gov

Electronic comments must be submitted as an ASCII file avoiding the use of special characters and any form of encryption. Comment and data will also be accepted on disks in Wordperfect 5.1 file format or ASCII file format. All comments and data in electronic form must be identified by the docket number FRL–5781–9 and appropriate petition number. Electronic comments on notice may be filed online at many Federal Depository Libraries.

List of Subjects

Environmental protection, Agricultural commodities, Food additives, Feed additives, Pesticides and pests, Reporting and recordkeeping requirements.

Dated: April 1, 1998

James Jones,

Director, Registration Division, Office of Pesticide Programs.

Summaries of Petitions

Petitioner summaries of the pesticide petitions are printed below as required by section 408(d)(3) of the FFDCA. The summaries of the petitions were prepared by the petitioners and represent the views of the petitioners. EPA is publishing the petition summaries verbatim without editing them in any way. The petition summary announces the availability of a description of the analytical methods available to EPA for the detection and measurement of the pesticide chemical residues or an explanation of why no such method is needed.

1. Interregional Research Project

PP 2E4101

EPA has received a pesticide petition (PP 2E4101) from the Interregional Research Project Number 4 (IR-4), proposing pursuant to section 408(d) of the Federal Food, Drug and Cosmetic Act, 21 U.S.C. 346a(d), to amend 40 CFR part 180 by establishing a tolerance for residues of the insecticide cyfluthrin, [cyano[4-fluoro-3-phenoxyphenyl]-methyl-3-[2,2- dicloroethenyl]-2,2-dimethylcyclopropanecarboxylate] in or on the raw agricultural commodity dried hops at 20.0 parts per million (ppm) and to remove the established tolerance for fresh hops at 4.0 ppm. EPA has determined that the petition contains data or information regarding the elements set forth in section 408(d)(2) of the Federal Food Drug and Cosmetic Act (FFDCA); however, EPA has not fully evaluated the sufficiency of the submitted data at this time or whether the data supports granting of the proposed tolerance. Additional data may be needed before EPA rules on the petition. This notice includes a summary of the petition prepared by Bayer Corporations (Bayer), the registrant.

A. Residue Chemistry

1. *Plant metabolism*. The metabolism of cyfluthrin in plants is adequately understood. Studies have been conducted to delineate the metabolism of radiolabeled cyfluthrin in various crops all showing similar results. The residue of concern is cyfluthrin.

2. *Analytical method*. Adequate analytical methodology (gas liquid chromatography with an electron capture detector) is available for enforcement purposes. The methodology was successfully validated by EPA's Beltsville laboratory in support of tolerances on cottonseed. The enforcement methodology has been submitted to the Food and Drug Administration for publication in the Pesticide Analytical Manual Vol. II (PAM II). Because of the long lead time for publication of the method in PAM II, the analytical methodology is being made available in the interim to anyone interested in pesticide enforcement when requested from Calvin Furlow, Public Response and Program Resource Branch, Field Operations Division (7502C), Office of Pesticide Programs, U.S. Environmental Protection Agency, 401 M St., SW., Washington, DC 20460. Office location and telephone number: Rm. 119FF, CM #2, 1921 Jefferson-Davis Hwy., Arlington, VA 22202, (703) 305-5232.

The established tolerances for residues of cyfluthrin in/on eggs, milks, fat, meat and meat by-products of cattle, goats, hogs, horses, sheep and poultry are adequate to cover secondary residues resulting from the proposed use as delineated in 40 CFR 180.6(a)(2).

3. *Magnitude of residues*. Import tolerances for cyfluthrin are presently established on fresh hops at 4.0 ppm and on dried hops at 20.0 ppm. IR-4 has conducted field trials in Washington, Oregon and Idaho in order to support expansion of the tolerances to include the domestic production of hops in the United States.

The residue data submitted to the EPA by IR-4 consist of three trials, one each in Washington, Oregon and Idaho. In each trial, hops were planted in three plots, two treated and one untreated. Cyfluthrin (Baythroid 2) was applied by foliar (ground) application at a rate of 0.05 pounds(lb) active ingredient(ai)/acre(A) to one plot and 0.1 lb ai/A to another. Five separate applications were made with an interval of 7-days between the last application and harvest.

Residues of cyfluthrin were detected in all treated samples from each trial and no interferences were detected in samples from control plots. The residue data are consistent for each trial. Cyfluthrin applied at 0.05 lb ai/A was detected from 0.44 to 0.78 ppm on fresh hops and from 1.83 to 2.36 ppm on dried hops. At 0.10 lb ai/A, residues were detected at 1.10 to 2.70 ppm on fresh hops and 3.76 to 7.57 ppm on dried hops.

B. Toxicological Profile

The data base for cyfluthrin is essentially complete. Data lacking but desirable are an acute neurotoxicity study in rats and a 90-day neurotoxicity study in rats. Although these data are lacking, Bayer believes the available toxicity data are sufficient to support the proposed tolerance and these missing data will not significantly change its risk assessment. Bayer has committed to submit the acute neurotoxicity study and the 90-day neurotoxicity study.

1. *Acute toxicity*. Results of acute toxicity tests show an acute oral lethal dose (LD_{50}) grater than or equal to 16.2 milligram (mg)/ kilogram (kg), a dermal (LD_{50}) >5,000 mg/kg, inhalation lethal concentration (LC_{50} greater than or equal to 0.468 mg/liter(L), primary eye irritation and primary dermal irritation show toxicity categories III and IV, respectively. Dermal sensitization tests conducted show that cyfluthrin is not a dermal sensitizer.

2. *Genotoxicty*. Mutagenicity tests were conducted, including several gene mutation assays (reverse mutation and recombination assays in bacteria and a Chinese hamster ovary(CHO)/HGPRT assay); a structural chromosome aberration assay (CHO/sister chromatid exchange assay); and an unscheduled DNA synthesis assay in rat hepatocytes. All tests were negative for genotoxicity.

3. *Reproductive and developmental toxicity*. An oral developmental toxicity study in rats with a maternal and fetal no-observed effect level (NOEL) of 10 mg/kg/day (highest dose tested). An oral developmental toxicity study in rabbits with a maternal NOEL of 20 mg/kg/day and a maternal lowest effect level (LEL) of 60 mg/kg/day, based on decreased body weight gain and decreased food consumption during the dosing period. A fetal NOEL of 20 mg/kg/day and a fetal LEL of 60 mg/kg/day were also observed in this study. The LEL was based on increased resorptions and increased postimplantation loss.

A developmental toxicity study in rats by the inhalation route of administration with a maternal NOEL of 0.0011 mg/l and a LEL of 0.0047 mg/l, based on reduced mobility, dyspnea, piloerection, ungroomed coats and eye irritation. The fetal NOEL is 0.00059 mg/l and the fetal LEL is 0.0011 mg/l, based on sternal anomalies and increased incidence of runts. A second developmental toxicity study in rats by the inhalation route of administration has been submitted to the Agency. A 3-generation reproduction study in rats with a systemic NOEL of 2.5 mg/kg/day and a systemic LEL of 7.5 mg/kg/day due to decreased parent and pup body weights. The reproductive NOEL and LEL are 7.5 mg/kg/day and 22.5 mg/kg/day respectively.

4. *Subchronic toxicity*. In a 28-day oral toxicity study in rats, cyfluthrin demonstrated a NOEL of 20 mg/kg/day. The lowest-observed-effect level (LOEL) was 80 (40) mg/kg/day in both sexes based on clinical signs of nerve toxicity, decreases in body weight gain, and changes in liver and adrenal weights. The high dose was 80 mg/kg/day during the first and third weeks and 40 mg/kg/day during the second and fourth weeks.

In a six month dog feeding study established a NOEL at 5 mg/kg/day for male and females. The LOEL for this study was 15 mg/kg/day for both sexes, based on neurological effects (hindlimb abnormalities) and gastrointestinal disturbances.

A 21-day repeated dose dermal toxicity study, male and female rats were treated with cyfluthrin by dermal occlusion at target doses of 0, 100, 340, or 1,000 mg/kg/day for 6 hours/day (average actual dose levels were 0, 113, 376 or 1,077 mg/kg/day). No mortality was observed, and there were no treatment-related effects on body weight, ophthalmology, organ weights, clinical biochemistry, or hematology. The LOEL for dermal effects was 376 mg/kg/day for male and female Sprague-Dawley rats based on gross and histological skin lesions. The NOEL for dermal effects was 113 mg/kg/day. The LOEL for systemic effects was 1,077 mg/kg/day based on decreased food consumption, red nasal discharge and urine staining. The NOEL for systemic effects was 376 mg/kg/day.

5. *Chronic toxicity*. A 12-month chronic feeding study in dogs with a NOEL of 4 mg/kg/day. The LEL for this study is established at 16 mg/kg/day, based on slight ataxia, increased vomiting, diarrhea and decreased body weight.

A 24-month chronic feeding/carcinogenicity study in rats showed a NOEL of 2.5 mg/kg/day and LEL of 6.2 mg/kg/day, based on decreased body weights in males, decreased food consumption in males, and inflammatory foci in the kidneys in females.

6. *Carcinogenicity*. A 24-month carcinogenicity study in mice was conducted. There were no carcinogenic effects observed under the conditions of the study.

A 24-month chronic feeding/carcinogenicity study in rats was conducted. There were no carcinogenic effects observed under the conditions of the study.

Cyfluthrin has been classified as a Group E chemical (evidence of non-carcinogenicity for humans) by the Agency. The classification was based on a lack of convincing evidence of carcinogenicity in adequate studies with two animal species, rat and mouse.

7. *Animal metabolism*. A metabolism study in rats showed that cyfluthrin is rapidly absorbed and excreted, mostly as conjugated metabolites in the urine, within 48 hours. An enterohepatic circulation was observed.

8. *Ednocrine effects*. No special studies investigating potential estrogenic or endocrine effects of cyfluthrin have been conducted. However, the standard battery of required studies has been completed. These studies include an evaluation of the potential effects on reproduction and development, and an evaluation of the pathology of the endocrine organs following repeated or long-term exposure. According to Bayer no endocrine effects were noted in any of the studies.

C. Aggregate Exposure

1. *Dietary exposure*. In examining aggregate exposure, FFDCA section 408 requires that EPA take into account available and reliable information concerning exposure from the pesticide residue in the food in question, residues in other foods for which there are tolerances, residues in ground water or surface water that is consumed as drinking water, and other non-occupational exposures through pesticide use in gardens, lawns, or buildings (residential and other indoor uses). Dietary exposure to residues of a pesticide in a food commodity are estimated by multiplying the average daily consumption of the food forms of that commodity by the tolerance level or the anticipated pesticide residue level. The Theoretical Maximum Residue Contribution (TMRC) is an estimate of the level of residues consumed daily if each food item contained pesticide residues equal to the tolerance. In evaluating food exposures, EPA takes into account varying consumption patterns of major identifiable subgroups of consumers, including infants and children. The TMRC is a ''worst case'' estimate since it is based on the assumptions that food contains pesticide residues at the tolerance level and that 100% of the crop is treated by pesticides that have established tolerances. If the TMRC exceeds the Reference Dose (RfD) or poses a lifetime cancer risk that is greater than approximately one in a million, EPA attempts to derive a more accurate exposure estimate for the pesticide by evaluating additional types of information (anticipated residue data and/or percent of crop treated data) which show, generally, that pesticide residues in most foods when they are eaten are well below established tolerances.

2. *Food*. Under a petition to establish tolerances for cyfluthrin in or on citrus (PP 4F4313 and FAP 4H5687, the EPA has recently performed a chronic dietary exposure/risk assessment for cyfluthrin using a RfD of 0.025 mg/kg body weight(bwt)/day, based on a NOEL of 50 ppm (2.5 mg/kg bwt/day) and an uncertainty factor of 100. The NOEL was determined in a 2-year rat feeding study. The endpoint effects of concern were decreased body weights in males and inflammation of the kidneys in females at the LEL of 6.2 mg/kg/day. This dietary exposure/risk assessment estimated the current dietary exposure for the U.S. population resulting from established tolerances, including the current 4 ppm tolerance on fresh hops, is 0.002907 mg/kg/bwt day. This represents 11.6% of the RfD. The exposure to children (1-6 years old), the subgroup population exposed to the highest risk was 0.00662 mg/kg/bwt/day or 26.4% of the RfD. The current action will increase the exposure to 0.003266 mg/kg/bwt day or 13% of the RfD for the U.S. population and 0.006622 mg/kg/bwt day or 26.4% or the RfD for children (1-6 years old). Generally speaking, EPA has no cause for concern if the total dietary exposure from residues for uses for which there are published and proposed tolerances is less than the RfD. Therefore, Bayer concludes that the chronic dietary risk of cyfluthrin, as estimated by the dietary risk assessment, does not appear to be of concern.

3. *Drinking water*. Cyfluthrin is immobile in soil, therefore, will not leach into ground water. Additionally, due to the insolubility and lipophilic nature of cyfluthrin, any residues in surface water will rapidly and tightly bind to soil particles and remain with sediment, therefore, Bayer does not anticipate dietary exposures to cyfluthrin from drinking water.

4. *Non-dietary exposure*. Non-occupational exposure to cyfluthrin may occur as a result of inhalation or contact from indoor residential, indoor commercial, and outdoor residential uses. Reliable data to determine aggregate exposures from these sources are currently not available. However, determinations of worst case exposure from inhalation in indoor settings (continuous exposure at saturation vapor concentration) indicated that adequate margins of safety existed even under these conditions. Since this evaluation greatly overestimated exposure, the contribution to aggregate exposure from inhalation in normal uses would be expected to be negligible. Estimations of outdoor residential exposure have been required for cyfluthrin in a data call-in issued in 1995. These data are being generated by the Outdoor Residential Exposure Task Force (ORETF). However, available data show that the acute dermal toxicity of cyfluthrin is very low, with the LD_{50} being greater than 5,000 mg/kg, the highest dose tested. Sub-acute (21-day) dermal toxicity data showed only localized (skin) effects at higher level exposures (1,000 mg/kg/day and 340 mg/kg/day). Other than skin effects at these high exposure levels, no effects were observed at any exposure levels, the highest level tested being 1,000 mg/kg/day. The use rate for cyfluthrin on residential turf is 1 g (1,000 mg) active ingredient per 1,000 square feet which would indicate that potential exposures would be well below levels tested. In addition, the localized skin effects seen at the prolonged higher exposures in animal tests have not been reported for non-occupational exposures to cyfluthrin in currently accepted uses, indicating that exposures are below the threshold of any observable effects. Indoor uses are limited to areas with little or no contact, so exposures would be expected to be even less. Thus, the dermal route of exposure does not appear to be significant and the contribution to aggregate exposure from dermal contact would be expected to be negligible.

D. Cumulative Effects

In consideration of potential cumulative effects of cyfluthrin and other substances that have a common mechanism of toxicity, Bayer concludes that there are currently no available data or other reliable information indicating that any toxic effects produced by cyfluthrin would be cumulative with those of other chemical compounds; thus only the potential risks of cyfluthrin have been considered in this assessment of its aggregate exposure.

E. Safety Determination

1. *U.S. population*. Using the conservative exposure assumptions described above and based on the completeness and reliability of the toxicity data it can be concluded that total aggregate exposure to cyfluthrin from all current uses as well as the proposed tolerance will utilize little more than 13% of the RfD for the U.S. population. EPA generally has no concerns for exposures below 100% of

the RfD, because the RfD represents the level at or below which daily aggregate exposure over a lifetime will not pose appreciable risks to human health. Thus, it can be concluded that there is a reasonable certainty that no harm will result from aggregate exposure to cyfluthrin residues.

2. *Infants and children*. In assessing the potential for additional sensitivity of infants and children to residues of cyfluthrin, the data from developmental studies in both rat and rabbit and a 2-generation reproduction study in the rat can be considered. The developmental toxicity studies evaluate any potential adverse effects on the developing animal resulting from pesticide exposure of the mother during prenatal development. The reproduction study evaluates any effects from exposure to the pesticide on the reproductive capability of mating animals through 2-generations, as well as any observed systemic toxicity.

FFDCA section 408 provides that EPA may apply an additional safety factor for infants and children in the case of threshold effects to account for pre- and post- natal effects and the completeness of the toxicity database. Based on current toxicological data requirements, the toxicology database for cyfluthrin relative to pre- and post-natal effects is complete. The NOELs observed in the developmental and reproduction study are equivalent or higher than the NOEL from the 2-year rat feeding study, used with a 100 fold uncertainty factor to establish the reference dose. Therefore, Bayer believes that an additional uncertainty factor is not warranted and that the RfD at 0.025 mg/kg/day is appropriate for assessing aggregate risk to infants and children.

Using the conservative exposure assumptions described above, cyfluthrin residues resulting from established tolerances, including a tolerance of 20 ppm on dry hops, would utilize 26.4% of the RfD for children (1-6 years old), the subgroup population exposed to the highest risk. Generally, EPA has no cause for concern if the exposure is less than 100% of the RfD. Therefore, based on the completeness and the reliability of the toxicity data and the conservative exposure assessment, Bayer concludes that there is a reasonable certainty that no harm will result to infants and children from aggregate exposure to the residues of cyfluthrin, including all anticipated dietary exposure and all other non-occupational exposures.

F. International Tolerances

A Codex maximum residue levels (MRLs) or 20 ppm has been established for residues of cyfluthrin on dried hops.

2. Interregional Research Project

PP Nos. 6E3404, 6E4685, 1E3966, 9E3697, and 5E4580

EPA has received pesticide petitions (PP Nos. 6E3404, 6E4685,1E3966, 9E3697, and 5E4580) from the Interregional Research Project Number 4 (IR-4), proposing pursuant to section 408(d) of the Federal Food, Drug and Cosmetic Act (FFDCA), 21 U.S.C. 346a(d), to amend 40 CFR part 180 tolerances for residues of esfenvalerate, (*S*)-cyano-(3-phenoxyphenyl)methyl (*S*)-4-chloro-alpha-(1-methylethyl) benzeneacetate in or on the raw agricultural commodities mustard greens at 5 ppm (PP 6E3404), kiwifruit at 0.5 ppm (PP 6E4685), globe artichoke at 1.0 ppm (PP 1E3966), cranberry at 0.2 ppm (PP 9E3697), and kohlrabi at 2.0 ppm (PP 5E4580). EPA has determined that these petitions contain data or information regarding the elements set forth in section 408(d)(2) of the FFDCA; however, EPA has not fully evaluated the sufficiency of submitted data at this time or whether these data support granting the proposed tolerances. Additional data may be needed before EPA rules on the petitions. This notice contains a summary of the petitions submitted by DuPont Agricultural Products, the registrant.

A. Residue Chemistry

1. *Plant metabolism*. The metabolism and chemical nature of residues of fenvalerate in plants and animals are adequately understood. The fate of fenvalerate has been extensively studied using radioactive tracers in plant and animal metabolism/nature of the residue studies. These studies have demonstrated that the parent compound is the only residue of toxicological significance. EPA has concluded that the qualitative nature of the residue is the same for both fenvalerate and esfenvalerate.

2. *Analytical method*. There is a practical analytical method utilizing electron-capture gas chromatography with nitrogen phosphorous detection available for enforcement with a limit of detection that allows monitoring food with residues at or above tolerance levels. The limit of detection for updated method is the same as that of the current PAM II, which is 0.01 ppm.

3. *Magnitude of residues*. Fenvalerate is a racemic mixture of four isomers (about 25% each). Technical Asana (the S,S-isomer enriched formulation, esfenvalerate), has been the only fenvalerate formulation sold in the U.S. for agricultural use. Since the S,S-isomer is the insecticidally active isomer, the use rate for Asana® is 4 times lower than that for Pydrin®. A petition is pending (PP 4F4329), to convert tolerances (still to be expressed as the sum of all isomers) based on the use rates for Asana®. Bridging residue studies have shown Asana® residues to be 3-4 times lower than Pydrin® residues.

B. Toxicological Profile

1. *Acute toxicity*. A battery of acute toxicity studies places technical esfenvalerate in Toxicity Category II for acute oral toxicity (rat lethal dose LD_{50} 87.2 mg/kg, Category III for acute dermal (rabbit LD_{50} >2,000 mg/kg) and primary eye irritation (mild irritation in rabbits), and Category IV for primary skin irritation (minimal skin irritation in rabbits that reversed within 72 hours after treatment). Acute inhalation on technical grade active ingredient (a.i.) was waived due to negligible vapor pressure. A dermal sensitization test on esfenvalerate in guinea pigs showed no sensitization.

2. *Genotoxicity*. Esfenvalerate was not mutagenic in reverse mutation assays in *S. typhimurium* and *E. coli* and did not induce mutations Chinese hamster V79 cells or chromosome aberrations in Chinese hamster ovary cells. Esfenvalerate did not induce micronuclei in bone marrow of mice given up to 150 mg/kg intra peritoneally. Esfenvalerate did not induce unscheduled deoxyribonucleic acid (DNA) synthesis in HeLa cells. Other genetic toxicology studies submitted on racemic fenvalerate indicate that the mixture containing equal parts of the four stereoisomers is not mutagenic in bacteria. The racemic mixture was also negative in a mouse host mediated assay and in a mouse dominant lethal assay.

3. *Reproductive and developmental toxicity*. Esfenvalerate was administered to pregnant female rats by gavage in a pilot developmental study at doses of 0, 1, 2, 3, 4, 5, and 20 mg/kg/day and a main study at 0, 2.5, 5, 10, and 20 mg/kg/day. Maternal clinical signs (abnormal gait and mobility) were observed at 2.5 mg/kg/day and above. A maternal NOEL of 2 mg/kg/day was established for the pilot study. The developmental NOEL was >20 mg/kg/day.

Esfenvalerate was administered by gavage to pregnant female rabbits in a pilot developmental study at doses of 0, 2, 3, 4, 4.5, 5, and 20 mg/kg/day and a main study at doses of 0, 3, 10, and 20 mg/kg/day. Maternal clinical signs (excessive grooming) were observed at 3 mg/kg/day and above. A maternal NOEL of 2 mg/kg/day was established on the

pilot study. The developmental NOEL was > 20 mg/kg/day.

A 2-generation feeding study with esfenvalerate was conducted in the rat at dietary levels of 0,75, 100, and 300 ppm. Skin lesions and minimal (non biologically significant) parental body weight effects occurred at 75 ppm. The NOEL for reproductive toxicity was 75 ppm (4.2-7.5 mg/kg/day) based on decreased pup weights at 100 ppm.

4. *Subchronic toxicity*. Two 90-day feeding studies with esfenvalerate were conducted in rats - one at 50, 150, 300, and 500 ppm esfenvalerate, and a second at 0, 75, 100, 125, and 300 ppm to provide additional dose levels. The NOEL was 125 ppm (6.3 mg/kg/day) based on clinical signs (jerky leg movements) observed at 150 ppm (7.5 mg/kg/day) and above.

A 90-day feeding study in mice was conducted at 0, 50, 150, and 500 ppm esfenvalerate with a NOEL of 150 ppm (30.5 mg/kg) based on clinical signs of toxicity at 500 ppm (106 mg/kg).

A 3-month subchronic study in dogs was satisfied by a 1-year oral study in dogs, in which the NOEL was 200 ppm (5 mg/kg/day).

A 21-day dermal study in rabbits with fenvalerate conducted at 100, 300, and 1,000 mg/kg/day with a no-observed-adverse effect level (NOAEL) of 1,000 mg/kg/day.

5. *Chronic toxicity*. In a 1-year study, dogs were fed 0, 25, 50, or 200 ppm esfenvalerate with no treatment related effects at any dietary level. The NOEL was established at 200 ppm (5 mg/kg/day). An effect level for dietary administration of esfenvalerate for dogs of 300 ppm had been established earlier in a three week pilot study used to select dose levels for the chronic dog study.

One chronic study with esfenvalerate and three chronic studies with fenvalerate have been conducted in mice.

In an 18-month study, mice were fed 0, 35, 150, or 350 ppm esfenvalerate. Mice fed 350 ppm were sacrificed within the first 2 months of the study after excessive self-trauma related to skin stimulation and data collected were not used in the evaluation of the oncogenic potential of esfenvalerate. The NOEL was 35 ppm (4.29 and 5.75 mg/kg/day for males and females, respectively) based on lower body weight and body weight gain at 150 ppm. Esfenvalerate did not produce carcinogenicity.

In a 2-year feeding study, mice were administered 0, 10, 50, 250 or 1,250 ppm fenvalerate in the diet. The NOEL was 10 ppm (1.5 mg/kg/day) based on granulomatous changes (related to fenvalerate only, not esfenvalerate) at 50 ppm (7.5 mg/kg/day). Fenvalerate did not produce carcinogenicity.

In an 18-month feeding study, mice were fed 0, 100, 300, 1,000, or 3,000 ppm fenvalerate in the diet. The NOEL is 100 ppm (15.0 mg/kg/day) based on fenvalerate-related microgranulomatous changes at 300 ppm (45 mg/kg/day). No compound related carcinogenicity occurred.

Mice were fed 0, 10, 30, 100, or 300 ppm fenvalerate for 20-months. The NOEL was 30 ppm (3.5 mg/kg/day) based on red blood cell effects and granulomatous changes at 100 ppm (15 mg/kg/day). Fenvalerate was not carcinogenic at any concentration.

In a 2-year study, rats were fed 1, 5, 25, or 250 ppm fenvalerate. A 1,000 ppm group was added in a supplemental study to establish an effect level. The NOEL was 250 ppm (12.5 mg/kg/day). At 1,000 ppm (50 mg/kg/day), hind limb weakness, lower body weight, and higher organ-to-body weight ratios were observed. Fenvalerate was not carcinogenic at any concentration. (A conclusion that fenvalerate is associated with the production of spindle cell sarcomas at 1,000 ppm was retracted by EPA).

EPA has classified esfenvalerate in Group E - evidence of non-carcinogenicity for humans.

6. *Animal metabolism*. In animal studies, after oral dosing with radioactive fenvalerate, the majority of the administered radioactivity was eliminated in the initial 24-hours. The metabolic pathway involved cleavage of the ester linkage followed by hydroxylation, oxidation, and conjugation of the acid and alcohol moieties.

7. *Metabolite toxicology*. The parent molecule is the only moiety of toxicological significance appropriate for regulation in plant and animal commodities.

C. Aggregate Exposure

1. *Dietary exposure*. Tolerances have been established for the residues of fenvalerate/esfenvalerate, in or on a variety of agricultural commodities. In addition, pending tolerance petitions exist for use of esfenvalerate on sugar beets, sorghum, head lettuce, celery, pistachios, and a number of other minor use commodities. For purposes of assessing dietary exposure, chronic and acute dietary assessments have been conducted using all existing and pending tolerances for esfenvalerate. EPA recently (August 2, 1997) reviewed the existing toxicology data base for esfenvalerate and selected the following toxicological endpoints. For acute toxicity, EPA established a NOEL of 2.0 mg/kg/day from rat and rabbit developmental studies based on maternal clinical signs at higher concentrations. An MOE of 100 was required. For chronic toxicity. EPA established the Reference Dose (RfD) for esfenvalerate at 0.02 mg/kg/day. This RfD was also based on a NOEL of 2.0 mg/kg/day in the rat developmental study with an uncertainty factor of 100. Esfenvalerate is classified as a Group E carcinogen - no evidence of carcinogenicity in either rats or mice. Therefore, a carcinogenicity risk analysis for humans is not required.

2. *Food*. A chronic dietary exposure assessment was conducted using Novigen's DEEM (Dietary Exposure Estimate Model). Anticipated residues and adjustment for percent crop treated were used in the chronic dietary risk assessment. The percentages of the RfD utilized by the most sensitive sub-population, children 1-6 years, was 4.6% based on a daily dietary exposure of 0.000911 mg/kg/day. Chronic exposure for the overall US population was 1.9% of the RfD based on a dietary exposure of 0.000376 mg/kg/day. This assessment has been approved by EPA and included pending tolerances (including mustard greens, kiwifruit, globe artichoke, cranberry, and kohlrabi) and all food tolerances for incidental residues from use in food handling establishments. EPA has no concern for exposures below 100% of the RfD because the RfD represents the level at or below which daily aggregate dietary exposure over a lifetime will not pose appreciable risks to human health.

Potential acute exposures from food commodities were estimated using a Tier 3 (Monte Carlo) Analysis and appropriate processing factors for processed food and distribution analysis. This analysis used field trial data to estimate exposure and federal and market survey information to derive the percent of crop treated. These data are considered reliable and used the upper end estimate of percent crop treated in order to not underestimate any significant subpopulation. Regional consumption information was taken into account. The MOEs for the most sensitive sub-population (children 1-6 years) were 202 and 103 at the 99th, and 99.9th percentile of exposure, respectively, based on daily exposures of 0.009908 and 0.019445 mg/kg/day. The MOEs for the general population are 355 and 171 at the 99th and 99.9th percentile of exposure, respectively, based on daily exposure estimates of 0.005635 and 0.011717 mg/kg/day. The EPA has stated there is no cause for concern if total acute exposure

calculated for the 99.9th percentile yields an MOE of 100 or larger. This acute dietary exposure estimate is considered conservative and EPA considered the MOEs adequate in a recent final rule published in the **Federal Register** at 62 FR 63019 (November 26, 1997) (FRL-5781-1).

3. *Drinking water*. Esfenvalerate is immobile in soil and will not leach into groundwater. Due to the insolubility and lipophilic nature of esfenvalerate, any residues in surface water will rapidly and tightly bind to soil particles and remain with sediment, therefore not contributing to potential dietary exposure from drinking water.

A screening evaluation of leaching potential of a typical pyrethroid was conducted using EPA's Pesticide Root Zone Model (PRZM). Based on this screening assessment, the potential concentrations of a pyrethroid in ground water at depths of 1 and 2 meters are essentially zero (much less than 0.001 parts per billion (ppb).

Surface water concentrations for pyrethroids were estimated using PRZM3 and Exposure Analysis Modeling System (EXAMS) using Standard EPA cotton runoff and Mississippi pond scenarios. The maximum concentration predicted in the simulated pond was 0.052 ppb. Concentrations in actual drinking water would be much lower than the levels predicted in the hypothetical, small, stagnant farm pond model since drinking water derived from surface water would be treated before consumption.

Chronic drinking water exposure was estimated to be 0.000001 mg/kg/day for both the U.S. general population and for non-nursing infants. Less than 0.1% of the RfD was occupied by both population groups.

Using these values, the contribution of water to the acute dietary risk estimate was estimated for the U.S. population to be 0.000019 mg/kg/day at the 99th percentile and 0.000039 mg/kg/day at the 99.9th percentile resulting in MOEs of 105,874 and 51,757, respectively. For the most sensitive subpopulation, non-nursing infants less than 1-year old, the exposure is 0.000050 mg/kg/day and 0.000074 mg/kg/day at the 99th and 99.9th percentile, respectively, resulting in MOEs of 39,652, and 27,042, respectively.

Therefore, DuPont believes that there is reasonable certainty of no harm from drinking water.

4. *Non-dietary exposure*. Esfenvalerate is registered for non-crop uses including spray treatments in and around commercial and residential areas, treatments for control of ectoparasites on pets, home care products including foggers, pressurized sprays, crack and crevice treatments, lawn and garden sprays, and pet and pet bedding sprays. For the non-agricultural products, the very low amounts of active ingredient they contain, combined with the low vapor pressure (1.5 x 10^{-9} mm Mercury at 25° C.) and low dermal penetration, would result in minimal inhalation and dermal exposure.

To assess risk from (nonfood) short and intermediate term exposure, EPA has recently selected a toxicological endpoint of 2.0 mg/kg/day, the NOEL from the rat and rabbit developmental studies. For dermal penetration/absorption, EPA selected 25% dermal absorption based on the weight-of-evidence available for structurally related pyrethroids. For inhalation exposure, EPA used the oral NOEL of 2.0 mg/kg/day and assumed 100% absorption by inhalation.

Individual non-dietary risk exposure analyses were conducted using a flea infestation scenario that included pet spray, carpet and room treatment, and lawn care, respectively. The total potential short- and intermediate-tern aggregate non-dietary exposure including lawn, carpet, and pet uses are: 0.000023 mg/kg/day for adults, 0.00129 mg/kg/day for children 1-6 years and 0.00138 mg/kg/day for infants less than 1-year old.

EPA concluded in the final rule published in the **Federal Register** at 62 FR 63019 (November 26, 1997) that the potential non-dietary exposure for esfenvalerate are associated with substantial margins of safety.

5. *Aggregate exposure dietary and non dietary*. EPA has concluded that aggregate chronic exposure to esfenvalerate from food and drinking water will utilize 1.9% of the RfD for the U.S. population based on a dietary exposure of 0.000377 mg/kg/day. The major identifiable subgroup with the highest aggregate exposure are children 1-6 years old. EPA generally has no concern for exposures below 100% of the RfD because the RfD represents the level at or below which daily aggregate dietary exposure over a lifetime will not pose appreciable risks to human health.

The acute aggregate risk assessment takes into account exposure from food and drinking water. The potential acute exposure from food and drinking water to the overall U.S. population provides an acute dietary exposure of 0.011756 mg/kg/day with an MOE of 170. This acute dietary exposure estimate is considered conservative, using anticipated residue values and percent crop-treated data in conjunction with Monte Carlo analysis.

Short- and intermediate-term aggregate exposure takes into account chronic dietary food and water (considered to be a background exposure level) plus indoor and outdoor residential exposure. The potential short- and intermediate-term aggregate risk for the U.S. population is an exposure of 0.0082 mg/kg/day with an MOE of 244.

It is important to acknowledge that these MOEs are likely to significantly underestimate the actual MOEs due to a variety of conservative assumptions and biases inherent in the exposure assessment methods used for their derivation. Therefore, it can be concluded that the potential non-dietary and dietary aggregate exposures for esfenvalerate are associated with a substantial degree of safety. EPA has previously determined in the final rule published in the **Federal Register** at 62 FR 63019 (November 26, 1997) that there was reasonable certainty that no harm will result from aggregate exposure to esfenvalerate residues. Head lettuce was included in that risk assessment.

D. Cumulative Effects

Section 408 (b) (2) (D) (v) requires that, when considering whether to establish, modify, or revoke a tolerance, the Agency consider ''available information'' concerning the cumulative effects of a particular pesticide's residues and ''other substances that have a common mechanism of toxicity''. In a recent final rule on esfenvalerate published in the **Federal Register** at 62 FR 63019 (November 26, 1997) EPA concluded, available information in this context might include not only toxicity, chemistry, and exposure data, but also scientific policies and methodologies for understanding common mechanisms of toxicity and conducting cumulative risk assessments. For most pesticides, although the Agency has some information in its files that may turn out to be helpful in eventually determining whether a pesticide shares a common mechanism of toxicity with any other substances, EPA does not at this time have the methodologies to resolve the complex scientific issues concerning common mechanism of toxicity in a meaningful way. EPA has begun a pilot process to study this issue further through the examination of particular classes of pesticides. The Agency hopes that the results of this pilot process will increase the Agency's scientific understanding of this question such that EPA will be able to develop and apply scientific principles for better

determining which chemicals have a common mechanism of toxicity and evaluating the cumulative effects of such chemicals. The Agency anticipates, however, that even as its understanding of the science of common mechanisms increases, decisions on specific classes of chemicals will be heavily dependent on chemical specific data, much of which may not be presently available.

Although at present the Agency does not know how to apply the information in its files concerning common mechanism issues to most risk assessments, there are pesticides as to which the common mechanism issues can be resolved. These pesticides include pesticides that are toxicologically dissimilar to existing chemical substances (in which case the Agency can conclude that it is unlikely that a pesticide shares a common mechanism of activity with other substances) and pesticides that produce a common toxic metabolite (in which case common mechanism of activity will be assumed). Although esfenvalerate is similar to other members of the synthetic pyrethroid class of insecticides, EPA does not have, at this time, available data to determine whether esfenvalerate has a common method of toxicity with other substances or how to include this pesticide in a cumulative risk assessment. Unlike other pesticides for which EPA has followed a cumulative risk approach based on a common mechanism of toxicity, esfenvalerate does not appear to produce a toxic metabolite produced by other substances. For the purposes of this tolerance action, therefore, EPA has not assumed that esfenvalerate has a common mechanism of toxicity with other substances.

E. Safety Determination

1. *U.S. population*. A chronic dietary exposure assessment using anticipated residues, monitoring information, and percent crop treated indicated the percentage of the RfD utilized by the General Population to be 1.9%. There is generally no concern for exposures below 100% of the RfD because the RfD represents the level at or below which daily aggregate dietary exposure over a lifetime will not pose appreciable risks to human health.

For acute exposure, a MOE of greater than 100 is considered an adequate MOE. A Tier 3 acute dietary exposure assessment found the General Population to have MOE's of 355 and 171 at the 99th and 99.9th percentile of exposure, respectively. These values were generated using actual field trial residues and market share data for percentage of crop treated. These results depict an accurate exposure pattern at an exaggerated daily dietary exposure rate.

Short- and intermediate-term aggregate exposure risk from chronic dietary food and water plus indoor and outdoor residential exposure for the U.S. population is an exposure of 0.0082 mg/kg/day with an MOE of 244.

Therefore, there is a reasonable certainty that no harm will result from chronic dietary, acute dietary, non-dietary, or aggregate exposure to esfenvalerate residues.

2. *Infants and children*. FFDCA section 408 provides that EPA shall apply an additional tenfold margin of safety for infants and children unless EPA determines that a different margin of safety will be safe for infants and children. EPA has stated that reliable data support using the standard MOE and uncertainty factor (100 for combined inter- and intra-species variability) and not the additional tenfold MOE/uncertainty factor when EPA has a complete data base under existing guidelines and when the severity of the effect in infants or children or the potency or unusual toxic properties of a compound do not raise concerns regarding the adequacy of the standard MOE/safety factor. In a recent final rule published in the **Federal Register** at 62 FR 63019 (November 26 1997), EPA concluded that reliable data support use of the standard 100-fold uncertainty factor for esfenvalerate, and that an additional uncertainty factor is not needed to protect the safety of infants and children. This decision was based on, no evidence of developmental toxicity at a doses up to 20 mg/kg/day (ten times the maternal NOEL) in prenatal developmental toxicity studies in both rats and rabbits; offspring toxicity only at dietary levels which were also found to be toxic to parental animals in the 2-generation reproduction study; and no evidence of additional sensitivity to young rats or rabbits following pre- or postnatal exposure to esfenvalerate.

A chronic dietary exposure assessment found the percentages of the RfD utilized by the most sensitive sub-population to be 4.6% for children 1-6 years based on a dietary exposure of 0.000912 mg/kg/day. The % RfD for nursing and non-nursing infants was 1.1% and 2.7%, respectively. The Agency has no cause for concern if RfD are below 100%.

The most sensitive sub-population, children 1-6 years, had acute dietary MOEs of 202 and 103 at the 99th and 99.9th percentile of exposure, respectively. Nursing infants had MOEs of 195 and 146 at the 99th and 99.9th percentile of exposure, respectively. Non-nursing infants had MOEs of 304 and 158 at the 99th and 99.9th percentile of exposure, respectively. The Agency has no cause for concern if total acute exposure calculated for the 99.9th percentile yields a MOE of 100 or larger.

EPA has recently concluded that the potential short- or intermediate-term aggregate exposure of esfenvalerate from chronic dietary food and water plus indoor and outdoor residential exposure to children (1-6 years old) is 0.0113 mg/kg/day with an MOE of 177. For infants (less than 1-year old) the exposure is 0.0098 mg/kg/day with an MOE of 204. Thus, there is a reasonable certainty that no harm will result to infants and children from aggregate exposure to esfenvalerate residues published in the **Federal Register** at 62 FR 63019 (November 26, 1997) (FRL-5754-6).

F. International Tolerances

Codex maximum residue levels (MRL's) have been established for residues of fenvalerate on a number of crops that also have U.S. tolerances. There are some minimal differences between the section 408 tolerances and certain Codex MRL values for specific commodities. These differences could be caused by differences in methods to establish tolerances, calculate animal feed, dietary exposure, and as a result of different agricultural practices. Therefore, some harmonization of these maximum residue levels may be required.

3. Novartis Crop Protection, Inc.

PP 7E4920

EPA has received a pesticide petition (PP 7E4920) from Novartis Crop Protection, Inc., P.O. Box 18300, Greensboro, NC 27419, proposing pursuant to section 408(d) of the Federal Food, Drug and Cosmetic Act, 21 U.S.C. 346a(d), to amend 40 CFR part 180 by establishing inert tolerances for residues of cloqiontocet-mexyl (acteic acid, [5-chloro-8-quinolinyl)oxy]-,1-methylhexylester; CGA–185072) in or on the raw agricultural commodities wheat grain at 0.02 ppm and wheat straw at 0.05 ppm. The proposed analytical method involves homogenization, filtration, partition, and cleanup with analysis by high performance liquid chromotography using UV detection. EPA has determined that the petition contains data or information regarding the elements set forth in section 408(d)(2) of the FFDCA; however, EPA has not fully evaluated the sufficiency of the submitted data at this time or whether

the data supports granting of the petition. Additional data may be needed before EPA rules on the petition.

A. Residue Chemistry

1. *Plant metabolism*. The metabolism of CGA–185072 in wheat has been investigated. Total residues in all crop samples are low. Metabolism involves primarily rapid hydrolysis of the parent to the resulting acid followed by conjugation.

2. *Analytical method*. Novartis has submitted practical analytical methods for the determination of CGA–185072 and its major plant metabolite CGA–153433 in wheat raw agricultural commodities (RACs). CGA–185072 is extracted from crops with acetonitrile, cleaned up by solvent partition and solid phase extraction and determined by column switching HPLC with UV detection. CGA–153433 is extracted from crops with an acetone-buffer (pH=3) solution, cleaned up by solvent partition and solid phase extraction, and determined by HPLC with UV detection. The limits of quantification (LOQ) for the methods are 0.02 ppm for CGA–185072 in forage and grain, 0.05 ppm for CGA–185072 in straw, and 0.05 ppm for CGA–153433 in forage, straw and grain.

3. *Magnitude of residues*. Twelve residue trials were conducted from 1989–1992 in the major spring wheat growing areas of Manitoba, Alberta and Saskatchewan, which share compatible crop zones with the major spring wheat growing areas of the U.S. (MT, ND, SD, MN). Nine trials were conducted in 1989-91 with a tank mix of CGA–184927 (a.i.) and the CGA–185072 safener as separate EC formulations and three trials in 1992 were conducted with CGA–184927 and the CGA–185072 safener as a pre-pack EC formulation. All trials had a single post-emergence application of CGA–185072 at a rate of 20 g a.i./Ha. At PHIs of 55-97 days, no detectable residues of CGA-185072 or its metabolite CGA–153433 were found in mature grain or straw from these trials. Separate decline studies (3) on green forage showed no detectable residues of CGA–185072 or CGA–153433 at 3 days after application. Freezer storage stability studies indicated reasonable stability of both analytes for a period of one year, with CGA–185072 declining to 83% in grain and 67% in straw after two years, while CGA–153433 was stable for at least two years.

B. Toxicological Profile

1. *Acute toxicity*. The acute oral and dermal LD_{50} values for cloquintocet-mexyl are greater than 2,000 mg/kg for rats of both sexes, respectively. Its acute inhalation LC_{50} in the rat is greater than 0.94 mg/liter , the highest attainable concentration. Cloquintocet-mexyl is slightly irritating to the eyes, minimally irritating to the skin of rabbits, but was found to be sensitizing to the skin of the guinea pig. This technical would carry the EPA signal word ''Caution''.

2. *Genotoxicty*. The mutagenic potential of cloquintocet-mexyl was investigated in six independent studies covering different end points in eukaryotes and prokaryotes *in vivo* and *in vitro*. These tests included: Ames reverse mutation with *Salmonella typhimurium* and Chinese hamster V79 cells; chromosomal aberrations using human lymphocytes and the mouse micronucleus test; and DNA repair using rat hepatocytes and human fibroblasts. Cloquintocet-mexyl was found to be negative in all these tests and, therefore, is considered devoid of any genotoxic potential at the levels of specific genes, chromosomes or DNA primary structure.

3. *Reproductive and developmental toxicity*. Dietary administration of cloquintocet-mexyl over two generations at levels as high as 10,000 ppm did not affect mating performance, fertility, or litter sizes, but a slightly reduced body weight development of adults and pups was noted at this level. The target organ was kidney in adults and pups. The treatment had no effect on reproductive organs. The developmental and reproductive NOEL was 5,000 ppm, corresponding to a mean daily intake of 350 mg/kg cloquintocet-mexyl.

In a developmental toxicity study in rats, the highest dose level of 400 mg/kg resulted in reduced body weight gain of the dams and signs of retarded fetal development. No teratogenic activity of the test article was detected. The NOEL for dams and fetuses was 100 mg/kg/day.

In a developmental toxicity study in rabbits, mortality was observed in dams at dose levels of 300 mg/kg. No teratogenic effects were noted. Fetuses showed signs of slightly retarded development. The NOEL for both dams and fetuses was 60 mg/kg/day.

4. *Subchronic toxicity*. In a 90-day study, rats fed 6,000 ppm exhibited reduced body weight gain and one male died with acute nephritis and inflamed urinary bladder. Reduced liver and kidney weights were observed in males fed 1,000 and 6,000 and in females fed 6,000 ppm. Target organs were identified to be kidney and urinary bladder. The NOEL was 150 ppm (9.66 mg/kg in males and 10.2 mg/kg in females).

In a 90-day study in beagle dogs, a level of 40,000 ppm resulted in deterioration of general condition so that the feeding level was reduced in a stepwise fashion to 15,000 ppm. Anemia was noted at 15,000 ppm and the feeding level of 1,000 ppm. The NOEL of 100 ppm was equivalent to a mean daily intake of 2.9 mg/kg in males and females.

5. *Chronic toxicity*. In a 12-month feeding study in dogs, 15,000 ppm resulted in inappetence and body weight loss. As a result, this feeding level was adjusted to 10,000 ppm after 2-weeks. Animals fed this level exhibited anemia and an elevation in blood urea levels. The kidney was considered the target organ. The NOEL of 1,500 ppm was equivalent to a mean daily intake of 43.2 mg/kg in males and 44.8 mg/kg in females.

Lifetime dietary administration of cloquintocet-mexyl to mice resulted in reduced body weights in both sexes at 5,000 ppm. Overall body weight gain was reduced by 17% to 22% in males and females, respectively, indicating the MTD was achieved or exceeded. Histopathological examination revealed chronic inflammation of the urinary bladder. There was no indication of any tumorigenic response due to treatment. The NOEL of 1,000 ppm was equivalent to a mean daily dose of 111 mg/kg in males and 102 mg/kg in females.

A top feeding level of 2,000 ppm was selected, based on the 90-day study, for the lifetime feeding study in the rat. This feeding level was well-accepted, but produced hyperplasia of the thymus in males and hyperplasia of the thyroid in females. There was no increase in tumors of any type and the total number of tumor- bearing animals showed no dose-related trends. The NOEL of 100 ppm was equivalent to a mean daily dose of 3.77 mg/kg in males and 4.33 mg/kg in females.

6. *Animal metabolism*. In rats, approximately 50% of an oral dose of cloquintocet-mexyl was rapidly absorbed through the gastrointestinal tract and excreted *via* urine and bile. The administered dose was excreted independent of sex and was essentially complete within 48 hours. 95% of the excreted dose was associated with one metabolite, an acid residue of cloquintocet-mexyl, CGA–153433. Simultaneous administration of the cloquintocet-mexyl and clodinafop-propargyl did not alter the rate of excretion of cloquintocet-mexyl or its metabolite pattern.

7. *Metabolite toxicology*. At the present time there is no evidence which affords an association of the toxicities noted with the highest feeding levels of cloquintocet-mexyl with its primary metabolite, CGA–153433.

8. *Endocrine disruption*. A special study was conducted to investigate a histological finding of hyperplasia of thyroid gland epithelium noted in the female rat in the standard lifetime combined chronic toxicity and carcinogenicity study. This study was a 28-day oral gavage study with a 28-day recovery period at dose levels as high as 400 mg/kg/day or approximately 4,000 ppm. No effect was noted on the level of thyroid hormones at any of the treatment levels. Although thyroid hyperplasia and an accompanying increase in pituitary basophilic cells were noted at the end of 28-days, these effects were reversible in the recovery period.

C. Aggregate Exposure

1. *Dietary exposure*. Cloquintocet-mexyl is intended to be used as a safener for the post emergence herbicide, clodinafop-propargyl, used in wheat. The use rate is very low (formulated at a 1:4 ratio of safener to active ingredient). Results from plant metabolism and residue studies show that residues of the safener cloquintocet-mexyl or its metabolites are below the detection limit in wheat grains and other wheat byproducts including green wheat used for forage. Tolerances in wheat and wheat products are being proposed at the detection limit of 0.02 ppm (LOQ) for the parent active ingredient in wheat grain and 0.05 ppm (LOQ) in wheat straw. For cloquintocet, similar tolerances will be proposed in wheat grain (0.02 ppm) and wheat straw (0.05 ppm).

i. *Chronic*. The RfD of 0.0377 mg/kg/day was derived from the male NOEL of 3.77 mg/kg/day. Based on the assumption that 100% of all wheat used for human consumption would contain residues of cloquintocet-mexyl and anticipated residues would be at the level of ½ the LOQ, the potential dietary exposure was calculated using the TAS exposure program based on the food survey from the year of 1977–1978. Calculations were made for anticipated residues using ½ the LOQ or 0.01 ppm. Calculated on the basis of the assumptions above, the chronic dietary exposure of the U.S. population to cloquintocet-mexyl would correspond to 0.000014 mg/kg/day or 0.04% of its RfD. MOE against NOEL in the most sensitive species is 269,286-fold.

Using the same conservative exposure assumptions, the percent of the RfD that will be utilized is 0.01% for nursing infants less than 1–year old, 0.03% for non-nursing infants, 0.08% for children 1-6 years old and 0.06% for children 7-12 years old. It is concluded that there is a reasonable certainty that no harm will result to infants and children from exposure to residues of cloquintocet-mexyl.

ii. *Acute*. Using the same computer software package used for the calculation of chronic dietary exposure, the acute dietary exposure was calculated for the general population and several sub-populations including children and women of child bearing age. The USDA Food Consumption Survey of 1989–1992 was used, however, instead of the 1977–1978 survey used for the chronic assessment. MOEs were calculated against the NOEL of 2.9 mg/kg found in a 90–day dietary toxicity study in dogs, which is the lowest NOEL observed in a short term or reproductive toxicity study. NOELs from reproductive or developmental toxicity studies were significantly higher and there was no evidence that cloquintocet-mexyl has any potency to affect these endpoints.

The exposure model predicted that 99.9% of the general population will be exposed to less than 0.000104 mg/kg cloquintocet-mexyl per day, which corresponds to a MOE of almost 27,944 when compared to the NOEL of 2.9 mg/kg. Children 1–6 years constitute the sub-population with the highest predicted exposure. Predicted acute exposure for this subgroup is less than 0.000134 mg/kg/day, corresponding to a MOE of at least 21,721 for 99.9% of the individuals.

2. *Drinking water*. Other potential sources of exposure of the general population to residues of pesticides are residues in drinking water. Results of studies have shown that cloquintocet-mexyl or its degradation products do not have any leaching potential. Accordingly, there is no risk of groundwater contamination with cloquintocet-mexyl or its metabolites. Thus, aggregate risk of exposure to cloquintocet-mexyl does not include drinking water. Cloquintocet-mexyl is not intended for uses other than the agricultural use on wheat. Thus, there is no potential for non-occupational exposure.

The Maximum Contaminant Level Goal (MCLG) calculated for cloquintocet-mexyl according to EPA's procedure leads to an exposure value substantially above levels that are likely to be found in the environment under proposed conditions of use.

MCLG = RfD x 20% x 70 kg/2 L

MCLG = 0.0377 mg/kg x 0.2 x 70 kg/2 L

MCLG = 0.264 ppm = 264 ppb

3. *Non-dietary exposure*. Exposure to cloquintocet-mexyl for the mixer/loader/ground boom/aerial applicator was calculated using the Pesticide Handlers Exposure Database (PHED). It was assumed that the product would be applied 10–days per year by ground boom application to a maximum of 300 acres per day by the grower, 450 acres per day by the commercial groundboom applicator, and 741 acres per day for the aerial applicator at a maximum use rate of 28 grams active ingredient (7 grams of cloquintocet-mexyl) per acre. For purposes of this assessment, it was assumed that an applicator would be wearing a long-sleeved shirt and long pants and the mixer/loader would, in addition, wear gloves. Daily doses were calculated for a 70 kg person assuming 100% dermal penetration.

The results indicate that large margins of safety exist for the proposed experimental use of cloquintocet-mexyl. The use pattern of cloquintocet indicates that the NOEL(1,000 mg/kg/day) from the 28–day rat dermal study is appropriate for comparison to mixer/loader-applicator exposure. The chronic NOEL of 3.77 mg/kg/day from the 2–year feeding study in rats is used to examine longer term exposure.

For short-term exposure, MOEs for cloquintocet ranged from 2.4E+05 for commercial open mixer-loader to 2.5E+06 for commercial groundboom enclosed-cab applicator. For chronic exposure, MOEs ranged from 3.2E+04 for commercial open mixer-loader to 3.5E+05 for commercial groundboom enclosed-cab applicator. Aerial application of cloquintocet results in short-term MOEs of 1.4E+05 for the mixer-loader and 2.5E+05 for pilots. Chronic MOEs are 2.0E+04 for the mixer-loader and 3.4E+04 for the pilot. Based on this assessment, occupational exposure to cloquintocet-mexyl results in acceptable MOEs.

In reality, the proposed label for the end use product containing the active ingredient plus cloquintocet-mexyl will require more restrictive personal protective equipment for applicators and other handlers, resulting in additional margins of safety.

D. Cumulative Effects

Novartis has considered the potential for a cumulative exposure assessment for effects of cloquintocet-mexyl and other substances with the same mechanism of toxicity. It is concluded that such a determination would be inappropriate at this time because of the unique role of cloquintocet-mexyl as a product specific safener.

E. Safety Determination

1. *U.S. population*. Using the same conservative exposure assumptions as described for chronic and acute dietary exposure, aggregrate exposure of the

U.S. population to cloquintocet-mexyl would correspond to 0.000014 mg/kg/day or 0.04% of its RfD. The chronic MOE against the NOEL in the most sensitive species is 269,286-fold. EPA generally has no concern for exposures below 100% of the RfD because the RfD represents the level at or below which daily aggregate dietary exposure over a lifetime will not pose appreciable risks to human health. Therefore, it is concluded that there is a reasonable certainty that no harm will result from aggregate exposure to residues of cloquintocet-mexyl.

2. *Infants and children*. In assessing the potential for additional sensitivity of infants and children to residues of cloquintocet-mexyl, data from developmental toxicity studies in the rat and rabbit and a 2- generation reproduction study in the rat have been considered. The developmental toxicity studies are designed to evaluate adverse effects on the developing organism resulting from chemical exposure during prenatal development to one or both parents. Reproduction studies provide information relating to effects from exposure to a chemical on the reproductive capability of mating animals and data on systemic toxicity.

The highest dose level of 400 mg/kg/day in a developmental toxicity study in rats resulted in reduced body weight gain of the dams and signs of retarded fetal development. No teratogenic activity due to the test article was detected. The NOEL for dams and fetuses was 100 mg/kg/day. Although mortality was observed in rabbit dams at the dose level of 300 mg/kg/day, no teratogenic effects were noted. The NOEL for both dams and fetuses was 60 mg/kg/day.

Dietary administration of cloquintocet-mexyl over 2-generations at levels as high as 10,000 ppm did not affect mating performance, fertility, or litter sizes in rats, but a slightly reduced body weight development of adults and pups was noted at this level. The target organ was kidney in adults and pups. The treatment had no effect on reproductive organs. The developmental and reproductive NOEL was 5,000 ppm, corresponding to a mean daily intake of 350 mg/kg cloquintocet-mexyl.

FFDCA section 408 provides that EPA may apply an additional safety factor for infants and children in the case of threshold effects to account for pre- and post-natal toxicity and the completeness of the database. Based on the current toxicological data requirements, the database relative to pre- and post-natal effects for children is complete. Further, for cloquintocet-mexyl, the NOEL of 3.77 mg/kg/day from the combined chronic/oncogenicity study in rats, which was used to calculate the RfD, is already lower than the NOEL's of 100 and 60 mg/kg/day for the rat and rabbit developmental toxicity studies, respectively. Further, the developmental and reproductive NOEL of 350 mg/kg/day from the cloquintocet-mexyl reproduction study is nearly 100 times greater than the NOEL for the combined chronic/oncogenicity rat study. These data would indicate there is no additional sensitivity of infants and children to cloquintocet-mexyl. Therefore, it is concluded that an additional uncertainty factor is not warranted to protect the health of infants and children from the use of cloquintocet-mexyl.

Using the conservative exposure assumptions described above, it is concluded that the percentage of the RfD that will utilized by aggregate exposure to residues of cloquintocet-mexyl for its proposed use as a safener for clodinafop-propargyl on wheat is 0.01% for nursing infants less than 1–year old, 0.03% for non-nursing infants, 0.08% for children 1-6 years old and 0.06% for children 7-12 years old. Therefore, based on the completeness and reliability of the toxicity data and the conservative nature of the exposure assessment, it is concluded that there is a reasonable certainty that no harm will result to infants and children from exposure to residues of cloquintocet-mexyl.

F. International Tolerances

Cloquintocet-mexyl is used as a safener for the herbicide, clodinafop-propargyl. There are no Codex Alimentarius Commission (CODEX) maximum residue levels (MRLs) established for residues of cloquintocet-mexyl in or on raw

[FR Doc. 98–9395 Filed 4–14–98; 8:45 am]

BILLING CODE 6560–50–F

ENVIRONMENTAL PROTECTION AGENCY

[OPP–181060; FRL 5782–4]

Carfentrazone ethyl; Receipt of Application for Emergency Exemption, Solicitation of Public Comment

AGENCY: Environmental Protection Agency (EPA).

ACTION: Notice.

SUMMARY: EPA has received a specific exemption request from the California Environmental Protection Agency, Department of Pesticide Regulation (hereafter referred to as the ''Applicant'') to use the pesticide carfentrazone ethyl (CAS 128639–02–1) to treat up to 70,000 acres of rice to control California arrowhead *Sagittaria montevidensis spp. Calcycina*) and Ricefield bulrush *Scirpus mucronatus*. The Applicant proposes the use of a new (unregistered) chemical. Therefore, in accordance with 40 CFR 166.24, EPA is soliciting public comment before making the decision whether or not to grant the exemption.

DATES: Comments must be received on or before April 30, 1998.

ADDRESSES: Three copies of written comments, bearing the identification notation ''OPP–181060,'' should be submitted by mail to: Public Information and Records Integrity Branch, Information Resources and Services Division (7502C), Office of Pesticide Programs, Environmental Protection Agency, 401 M St., SW., Washington, DC 20460. In person, bring comments to: Rm. 119, Crystal Mall #2, 1921 Jefferson Davis Highway, Arlington, VA.

Comments and data may also be submitted electronically by sending electronic mail (e-mail) to: opp-docket@epamail.epa.gov. Follow the instruction under ''SUPPLEMENTARY INFORMATION.'' No Confidential Business Information (CBI) should be submitted through e-mail.

Information submitted in any comment concerning this notice may be claimed confidential by marking any part or all of that information as CBI. Information so marked will not be disclosed except in accordance with procedures set forth in 40 CFR part 2. A copy of the comment that does not contain CBI must be submitted for inclusion in the public record. Information not marked confidential may be included in the public record by EPA without prior notice.

The public docket is available for public inspection in Rm. 119, Crystal Mall #2, 1921 Jefferson Davis Highway, Arlington, VA, from 8:30 a.m. to 4 p.m., Monday through Friday, excluding legal holidays.

FOR FURTHER INFORMATION CONTACT: By mail: Stephen Schaible, Registration Division (7505C), Office of Pesticide Programs, Environmental Protection Agency, 401 M St., SW., Washington, DC 20460. Office location, telephone number, and e-mail: Floor 2, Crystal Mall #2, 1921 Jefferson Davis Highway, Arlington, VA, (703–308–9362); e-mail: schaible.stephen@epamail.epa.gov.

SUPPLEMENTARY INFORMATION: Pursuant to section 18 of the Federal Insecticide, Fungicide, and Rodenticide Act (FIFRA) (7 U.S.C. 136p), the Administrator may, at her discretion, exempt a state agency

from any registration provision of FIFRA if she determines that emergency conditions exist which require such exemption. The Applicant has requested the Administrator to issue a specific exemption for the use of carfentrazone ethyl on rice to control California arrowhead *Sagittaria montevidensis spp. Calcycina* and ricefield bulrush *Scirpus mucronatus*. Information in accordance with 40 CFR part 166 was submitted as part of this request.

According to the Applicant, these two weed species cause economic damage by competing with rice plants for soil, nutrients and sunlight, and by interfering with harvesting equipment to reduce yields. Resistance to the registered alternative herbicide of choice, bensulfuron methyl, has occurred; resistance was first reported in 1992 and a survey conducted in 1995 estimated that 60% of rice fields have resistant California arrowhead and 15% have resistant ricefield bulrush. Phenoxy herbicides such as MCPA or 2,4-D may be used on bensulfuron methyl resistant weeds, but are phytotoxic to rice plants. Additionally, manufacturers have announced that they will not supply these products in the Sacramento Valley, due to persistent concerns about off-target applications, drift and damage symptoms on non-target crops, especially cotton. Propanil and triclopyr may offer partial control of these weeds, but neither is labeled for this use.

Under the proposed exemption, a maximum of 12 oz. of product (0.3 lbs. active ingredient (a.i.)) per acre per season may be used. Two applications are specified, by air or ground; for early postseeding applications to flooded paddies with water-seeded rice, apply 8 ounces (2 lbs. a.i.) per acre, and for postemergent applications to rice with weeds exposed, apply 4 oz. of product (0.1 lbs. a.i.) per acre. A postharvest interval (PHI) of 7 days is specified, as is a Restricted Entry Interval (REI) of 12 days. The use of carfentrazone ethyl is only allowed if the following conditions are met:

(1) It has been documented that the listed weeds on this section 18 are not controlled by bensulfuron methyl in the field(s) that are to be treated with carfentrazone ethyl, or where propanil cannot be used due to buffer zone restrictions.

(2) Field(s) that are to be treated are within the propanil buffer zones. This section 18 emergency exemption is not for use on wild rice.

This notice does not constitute a decision by EPA on the application itself. The regulations governing section 18 require publication of a notice of receipt of an application for a specific exemption proposing use of a new chemical (i.e., an active ingredient not contained in any currently registered pesticide) or if an emergency exemption for a use has been requested in any 3 previous years, and a complete application for registration of the use and/or a tolerance petition has not been submitted to the Agency. Such notice provides for opportunity for public comment on the application.

The official record for this notice, as well as the public version, has been established for this notice under docket number [OPP–181060] (including comments and data submitted electronically as described below). A public version of this record, including printed, paper versions of electronic comments, which does not include any information claimed as CBI is available for inspection from 8:30 a.m. to 4 p.m., Monday through Friday, excluding legal holidays. The official record is the paper record maintained at the address in ''ADDRESSES'' at the beginning of this document.

Electronic comments can be sent directly to EPA at:opp-docket@epamail.epa.gov

Electronic comments must be submitted as an ASCII file avoiding the use of special characters and any form of encryption. Comments and data will also be accepted on disks in WordPerfect in 5.1/6.1 or ASCII file format. All comments and data in electronic form must be identified by the docket number [OPP–181060]. Electronic comments on this notice may be filed online at many Federal Depository Libraries.

The Agency, accordingly, will review and consider all comments received during the comment period in determining whether to issue the emergency exemption requested by the California Environmental Protection Agency, Department of Pesticide Regulation.

List of Subjects

Environmental protection, Pesticides and pests, Emergency exemptions.

Dated: April 1, 1998.

James Jones,

Director, Registration Division, Office of Pesticide Programs.

[FR Doc. 98–10018 Filed 4–14–98; 8:45 am]

BILLING CODE 6560–50–F

FEDERAL COMMUNICATIONS COMMISSION

Notice of Public Information Collection(s) being Reviewed by the Federal Communications Commission

April 9, 1998.

SUMMARY: The Federal Communications Commission, as part of its continuing effort to reduce paperwork burden invites the general public and other Federal agencies to take this opportunity to comment on the following information collection(s), as required by the Paperwork Reduction Act of 1995, Pub. L. 104–13. An agency may not conduct or sponsor a collection of information unless it displays a currently valid control number. No person shall be subject to any penalty for failing to comply with a collection of information subject to the Paperwork Reduction Act (PRA) that does not display a valid control number. Comments are requested concerning (a) whether the proposed collection of information is necessary for the proper performance of the functions of the Commission, including whether the information shall have practical utility; (b) the accuracy of the Commission's burden estimate; (c) ways to enhance the quality, utility, and clarity of the information collected; and (d) ways to minimize the burden of the collection of information on the respondents, including the use of automated collection techniques or other forms of information technology.

DATES: Written comments should be submitted on or before June 15, 1998. If you anticipate that you will be submitting comments, but find it difficult to do so within the period of time allowed by this notice, you should advise the contact listed below as soon as possible.

ADDRESSES: Direct all comments to Judy Boley, Federal Communications Commission, Room 234, 1919 M St., NW., Washington, DC 20554 or via internet to jboley@fcc.gov.

FOR FURTHER INFORMATION CONTACT: For additional information or copies of the information collection(s), contact Judy Boley at 202–418–0214 or via internet at jboley@fcc.gov.

SUPPLEMENTARY INFORMATION:

OMB Approval Number: 3060-0821.

Title: DTV Engineering Analysis for De Minimis Standard.

Form Number: N/A.

Type of Review: Extension of a currently approved collection.

Respondents: Businesses or other for-profit, not-for-profit institutions.

Number of Respondents: 20.

Estimated Time Per Response: 21 hours.

Total Annual Burden: 100 hours.

Frequency of Response: Third party disclosure, on occasion reporting requirement.

Estimated Cost Per Respondent: $0.

Needs and Uses: In the Memorandum Opinion and Order to the Sixth Report and Order in MM Docket 87–268, the Commission adopted a new de minimis standard for permissible new interference resulting from increases in DTV facilities (power and/or antenna height) or transmitter site changes. The new de minimis interference standard will provide additional opportunities for stations to increase power and make other changes. Stations seeking to operate at higher power levels under these provisions will be required to notify, by certified mail, all stations that could potentially be affected by such operation at the time the station files its application for a construction permit or modification of facilities. A station that believes that its service is being affected beyond our de minimis standard may file an opposition with the Commission. Such an opposition shall include an engineering analysis demonstrating that additional impermissible interference would occur. In certain instances, grants for increased power may be conditioned on validation of performance through field measurements of actual station operation by the station licensee opposing parties.

OMB Approval Number: 3060-0812.

Title: Assessment and Collection of Regulatory Fees for Fiscal Year 1997 - MD Docket 96–186.

Form Number: N/A.

Type of Review: Extension of a currently approved collection.

Respondents: Individuals or households; businesses or other for-profit, not-for-profit institutions.

Number of Respondents: 635,738.

Estimated Time Per Response: .50 hours.

Total Annual Burden: 317,869 hours.

Frequency of Response: Recordkeeping requirement; on occasion reporting requirement.

Estimated Cost per Respondent: $0.

Needs and Uses: The Commission in accordance with the Communications Act of 1934, is required to assess and collect regulatory fees from its licensees and regulatees in order to recover its costs incurred in conducting enforcement, policy and rulemaking, international and user information activities. The purpose of the information collection is to: 1) facilitate the statutory provision that non-profit entities be exempt from payment of regulatory fees; and 2) facilitate the FCC's ability to audit regulatory fee payment compliance in the Commercial Mobile Radio Services (CMRS) industry.

Federal Communications Commission.

William F. Caton,

Deputy Secretary.

[FR Doc. 98–9944 Filed 4–14–98; 8:45 am]

BILLING CODE 6712–01–F

FEDERAL COMMUNICATIONS COMMISSION

[CC Docket No. 95–155]

Toll Free Service Access Codes

AGENCY: Federal Communications Commission.

ACTION: Notice; letter order.

SUMMARY: In Toll Free Service Access Codes, Fourth Report and Order and Memorandum Opinion and Order, CC Docket 95–155, FCC No. 98–48 (rel. March 31, 1998), the Commission determined that the toll free 888 vanity numbers initially set aside shall be offered through a right of first refusal to subscribers of corresponding 800 numbers. The Common Carrier Bureau, pursuant to delegated authority, issued a letter to Database Service Management, Inc., setting forth the procedures for implementing the right of first refusal.

FOR FURTHER INFORMATION CONTACT: Robin Smolen, 202–418–2353

SUPPLEMENTARY INFORMATION:

April 2, 1998

Approved by OMB: 3060–0825

Expires: 10/31/98

Estimated Average Burden Per Respondent: 1 Hour

Mr. Michael Wade

President, Database Service Management, Inc.

6 Corporate Place

Room PYA–1F286

Piscataway, NJ 08854–4157

Subject: Fourth Report and Order (FCC 98–48), CC Docket No. 95–155.

Dear Mr. Wade:

In October 1995, the Commission initiated a rulemaking proceeding to smooth the transition to an expanded set of toll free service access codes, starting with the introduction of 888 numbers. This proceeding also was initiated to ensure the promotion of efficient, fair, and orderly allocation and use of these limited numbering resources.

On January 25, 1996, the Common Carrier Bureau, acting pursuant to delegated authority, adopted a *Report and Order* (CC Docket No. 95–155, DA 96–69) addressing the reservation of 888 numbers, tariffing issues, 800 and 888 conservation plans, and interim protection of vanity numbers in 888 (''First Report and Order''). Moreover, in the First Report and Order, the Bureau ordered Database Service Management, Inc. (''DSMI'') to place all ''888–555–XXXX'' numbers in unavailable status until the Commission could reach a decision on the issues raised in the NPRM related to the development of a competitive toll free directory assistance service. The Common Carrier Bureau agreed with an industry plan permitting Responsible Organizations (''RespOrgs''), the entities responsible for managing a toll free subscriber's records, to poll their commercial 800 subscribers to determine which vanity numbers subscribers may want replicated in 888 and to submit that information to Database Service Management, Inc. (''DSMI''), the administrator of the toll free database. The Common Carrier Bureau directed DSMI to place these numbers in ''unavailable'' status until the Commission resolved whether these numbers ultimately should be afforded permanent special rights or protection.

On March 31, 1998, the Commission issued an *Order and Memorandum Opinion and Order* (''Fourth Report and Order'') (a copy of which is enclosed), in which it concluded that vanity numbers in the 877 toll free code and toll free codes beyond 877 shall be released and made available on a first-come, first-served basis. The Commission further concluded that 800 subscribers holding 800 vanity numbers that correspond to the 888 vanity numbers that were initially set aside shall be offered a right of first refusal to those 888 set-aside numbers. If the 800 subscriber refrains from exercising its option to reserve the corresponding 888 vanity number, that number shall be released and made available on a first-come, first-served basis. The 888 set-aside numbers are to be made available for assignment 90 days after the 877 code is deployed.

The Bureau instructs DSMI to release the 877 numbers into the general pool of available numbers on April 5, 1998 for reservation on a first-come, first-served basis. Further, the Bureau instructs DSMI to inform RespOrgs to notify their 800 subscribers of their right of first refusal of the set-aside 888 numbers. RespOrgs will have 20 days from 877 deployment to notify customers of their rights of first refusal. These 800 subscribers will have 30 days to respond in writing to their RespOrgs. This means that these subscribers must submit their written responses to their RespOrgs no later than 50 days from 877 deployment. RespOrgs will then have 30 days to submit all required documentation to DSMI. This means that RespOrgs must submit to DSMI all required documentation no later than 80 days from 877 deployment. RespOrgs will have 10 days to notify DSMI of errors made regarding deployment of 888 numbers and to provide documentation to support the claim, including documentation that the RespOrg complied with the procedures described in this letter for deploying the 888 numbers. DSMI should resolve these claims expeditiously.

If the 800 subscriber chooses to obtain the corresponding number in the 888 code, that number should be placed in the control of that 800 subscriber's RespOrg 80 days after the 877 code is deployed. We require DSMI to place that number in the control of the appropriate RespOrg only if it receives a

letter within the proper time period from that RespOrg making that request along with a clear and legible copy of the letter that the 800 subscriber sent to its RespOrg or Toll Free Service Provider expressing interest in obtaining that 888 number. Those 888 numbers placed in the control of the appropriate RespOrgs should be assigned to the appropriate subscribers no later than 90 days from 877 deployment.

If the 800 subscriber is not interested in obtaining the set-aside 888 number, that 888 number shall be released into the spare pool of available numbers, 90 days after deployment of 877, for assignment on a first-come, first-served basis. We require that DSMI release any 888 set-aside number into the spare pool of available numbers only if one of three events occur: (1) DSMI receives a letter from the RespOrg authorizing DSMI to release that particular 888 number along with a clear and legible copy of the letter that the current 800 subscriber sent to its RespOrg or Toll Free Service Provider refusing that 888 number; (2) DSMI receives a letter from the RespOrg certifying that the RespOrg notified the 800 subscriber and the subscriber failed to respond within the required period of time; or (3) the 800 number corresponding to the 888 set-aside number is not assigned to a subscriber.

Finally, we direct DSMI to place all ''877–555–XXXX'' numbers in unavailable status along with the ''888–555–XXXX'' numbers until the Commission has reached a decision on the issues related to the development of competitive directory assistance service.

Paperwork Reduction Act Notice: On March 27, 1998, the Commission adopted an *Order and Memorandum Opinion and Order,* (CC Docket 95–155), FCC 98–48 (''Fourth Report and Order'') resolving how vanity numbers should be assigned. The Commission delegated authority to the Bureau to resolve those issues necessary for the assignment of the 888 set-aside vanity numbers and implementation of 877, including conservation plans, if needed on any or all toll free codes in use to prevent exhaust of toll free numbers before deployment of the next toll free code. The Commission concluded that vanity numbers in the 877 toll free code, and toll free codes beyond 877, shall be released and made available on a first-come, first-served basis as each toll free code is deployed. The Commission further concluded that 800 subscribers holding 800 vanity numbers that correspond to the 888 vanity numbers that were initially set aside shall be offered a right of first refusal to those 888 set-aside numbers. If the 800 subscriber refrains from exercising its option to reserve the corresponding 888 vanity number, that number shall be released and made available on a first-come, first-served basis. The 888 set-aside numbers are to be made available for assignment 90 days after the 877 code is deployed. The requirements are necessary to ensure that toll free subscribers are given notice and opportunity to reserve numbers of their choice. Your response is required.

Remember—You are not required to respond to a collection of information sponsored by the Federal government, and the government may not conduct or sponsor this collection, unless it displays a currently valid Office of Management and Budget (OMB) control number. This collection has been assigned an OMB control number of 3060–0825.

We have estimated that each response to this collection of information will take, on average, 1 hour. Our estimate includes the time to read the instructions, look through existing records, gather and maintain the required data, and actually complete and review the form or response. If you have any comments on this estimate, or how we can improve the collection and reduce the burden it causes you, please write the Federal Communications Commission, AMD–PERM, Washington, D.C. 20554, Paperwork Reduction Project (3060–0825). We also will accept your comments via Internet if you send them to jboley@fcc.gov. Please do not send completed forms to this address.

The foregoing Notice is required by the Privacy Act of 1974, Public Law 93–579, December 31, 1974, 5 U.S.C. 552a(e)(3), and the Paperwork Reduction Act of 1995, Public Law 104–13, 44 U.S.C. 3501.

Sincerely,

Geraldine A. Matise, Chief, Network Services Division.

Federal Communications Commission.

Anna M. Gomez,

Deputy Chief, Network Services Division.

[FR Doc. 98–9945 Filed 4–14–98; 8:45 am]

BILLING CODE 6712–01–U

FEDERAL MARITIME COMMISSION

Notice of Agreement(s) Filed

The Commission hereby gives notice of the filing of the following agreement(s) under the Shipping Act of 1984.

Interested parties can review or obtain copies of agreements at the Washington, DC offices of the Commission, 800 North Capitol Street, NW, Room 962. Interested parties may submit comments on an agreement to the Secretary, Federal Maritime Commission, Washington, DC 20573, within 10 days of the date this notice appears in the **Federal Register**.

Agreement No.: 203–011527–001.

Title: Montemar S.A./Zim Service Agreement.

Parties: Montemar S.A. d/b/a Pan American Independent Line; Zim Israel Navigation Company Ltd.

Synosis: The proposed amendment makes numerous modifications to the Agreement: (1) Changes the name of the Agreement to the Independent Carriers Alliance Agreement; (2) adds Cho Yang Shipping Co., Ltd., Di Gregorio Navegacao Ltda., DSR–Senator Lines, and Hanjin Shipping Co., Ltd.; (3) increases vessel maximum authority; (4) adds vessel charter/sub-charter authority subject to Brazilian Government approval; and (5) makes other conforming changes to Articles 5, 6, 7, 8, and 9, as well as, adding new Articles 13–16.

Agreement No.: 232–011616.

Title: Zim/Croatia Space Charter Agreement.

Parties: Croatia Line d.d. (''Croatia''); Zim Israel Navigation Co., Ltd (''Zim'').

Synosis: The proposed Agreement authorizes Zim to charter space to Croatia and for the parties to enter into related cooperative arrangements in the trade between ports on the Mediterranean Sea and ports on the U.S. Atlantic Coast.

Agreement No.: 207–011617.

Title: Texpress American Joint Service Agreement.

Parties: Associated Transport Line, L.L.C.; Panamanian Carriers Corporation; Texpress American Line Ltd.

Synosis: The proposed Agreement would authorize the parties to operate a joint service, known as the Texpress American Line Ltd., in the trade between U.S. Gulf ports, and U.S. inland and coastal points served via those ports, and ports and points in Panama and the Pacific and southern Atlantic Coasts of South America.

By order of the Federal Maritime Commission.

Dated: April 9, 1998.

Joseph C. Polking,

Secretary.

[FR Doc. 98–9867 Filed 4–14–98; 8:45 am]

BILLING CODE 6730–01–M

FEDERAL MARITIME COMMISSION

Ocean Freight Forwarder License; Revocations

The Federal Maritime Commission hereby gives notice that the following freight forwarder licenses have been revoked pursuant to section 19 of the Shipping Act of 1984 (46 (U.S.C. app. 1718) and the regulations of the Commission pertaining to the licensing of ocean freight forwarders, effective on the corresponding revocation dates shown below:

License Number: 4181.

Name: Abaco International Shippers, Inc.

Address: 4201 West Wrightwood Avenue, Chicago, IL 60639.

Date Revoked: January 21, 1998.

Reason: Failed to maintain a valid surety bond.

License Number: 2699.

Name: AFC International Forwarders, Inc.

Address: 213 Franklin Street, Paterson, NJ 07524.
Date Revoked: September 24, 1997.
Reason: Failed to maintain a valid surety bond.

License Number: 3668.
Name: Amerpole International, Inc.
Address: 220 McClellan Highway, East Boston, MA 02128.
Date Revoked: October 26, 1997.
Reason: Failed to maintain a valid surety bond.

License Number: 4340.
Name: Bottom Line Forwarders Corp.
Address: 10302 N.W. South River Drive, Bay #19, Medley, FL 33178.
Date Revoked: February 4, 1998.
Reason: Failed to maintain a valid surety bond.

License Number: 3539.
Name: Carlos G. Medina-Luque.
Address: 2485 West 70th Place, Hialeah, FL 33016.
Date Revoked: October 25, 1997.
Reason: Failed to maintain a valid surety bond.

License Number: 2225.
Name: Columbia Shipping Inc.
Address: 138–01 Springfield Blvd., Jamaica, NY 11413–2622.
Date Revoked: January 23, 1998.
Reason: Surrendered license voluntarily.

License Number: 3646.
Name: Columbia Shipping Inc. (SFO).
Address: 813 Grandview Drive, South San Francisco, CA 94080.
Date Revoked: January 23, 1998.
Reason: Surrendered license voluntarily.

License Number: 3519.
Name: Columbia Shipping Inc. (West).
Address: 200 Center Street, El Segundo, CA 90245.
Date Revoked: January 23, 1998.
Reason: Surrendered license voluntarily.

License Number: 1180.
Name: Constable & Madison, Inc.
Address: 1314 Texas Ave., Suite 608, Houston, TX 77052.
Date Revoked: January 17, 1998.
Reason: Failed to maintain a valid surety bond.

License Number: 3479.
Name: David L. Ireland d/b/a/ CXports.
Address: 600 1st Ave., Suite 416, Seattle, WA 98104.
Date Revoked: December 10, 1997.
Reason: Surrendered license voluntarily.

License Number: 3312.
Name: Ecuamerica International, Inc. d/b/a Ecuamerica International Transport.
Address: 6203 Johns Road, Suite 4, Tampa, FL 33634.
Date Revoked: December 3, 1997.
Reason: Failed to maintain a valid surety bond.

License Number: 3991.
Name: FHC International Enterprises, Inc.
Address: 8244 N.W. 68th Street, Miami, FL 33166.
Date Revoked: November 9, 1997.
Reason: Failed to maintain a valid surety bond.

License Number: 3724.
Name: Global International Forwarders Inc.
Address: 210 Newark Avenue, Lyndhurst, NJ 07071.
Date Revoked: December 12, 1997.
Reason: Failed to maintain a valid surety bond.

License Number: 3999.
Name: Guy Timothy Nishida.
Address: 7429 Ogelsby Ave., Los Angeles, CA 90045.
Date Revoked: October 31, 1997.
Reason: Failed to maintain a valid surety bond.

License Number: 3834.
Name: Intercarga U.S.A. Corporation.
Address: 8407 N.W. 70th Street, Miami, FL 33166.
Date Revoked: November 6, 1997.
Reason: Failed to maintain a valid surety bond.

License Number: 4289.
Name: International Consultants, Inc.
Address: 1032 Chuck Dawley Blvd., Suite E, Mt. Pleasant, SC 29464.
Date Revoked: March 20, 1998.
Reason: Failed to maintain a valid surety bond.

License Number: 4099.
Name: International Documents & Parcel Express, Inc.
Address: 8025 S.W. 107th Ave., Suite 306, Miami, FL 33173.
Date Revoked: January 11, 1998.
Reason: Failed to maintain a valid surety bond.

License Number: 4083.
Name: Interpacific Airmarine, Inc.
Address: 555 Redondo Beach Blvd., Suite 160, Gardena, CA 90248.
Date Revoked: February 25, 1998.
Reason: Failed to maintain a valid surety bond.

License Number: 1807.
Name: Jorge Blanch, Inc.
Address: 705 Cerra Street, Stop 15, Santurce, PR 00907.
Date Revoked: March 6, 1998.
Reason: Failed to maintain a valid surety bond.

License Number: 2999.
Name: Kelly International Forwarding Co., Inc.
Address: 230–65 168th Street, Jamaica, NY 11434.
Date Revoked: November 28, 1997.
Reason: Failed to maintain a valid surety bond.

License Number: 4317.
Name: Kristine Highsmith d/b/a/ Aladdin Freight International.
Address: 849 Alice Ave., San Leandro, CA 94577.
Date Revoked: December 17, 1997.
Reason: Surrendered license voluntarily.

License Number: 3191.
Name: L.A. Express, Inc. d/b/a/ Team International.
Address: 419 Bremen Street, East Boston, MA 02128.
Date Revoked: October 16, 1997.
Reason: Surrendered license voluntarily.

License Number: 1861.
Name: Latin American Express Corp.
Address: 2271 N.W. 102 Place, Miami, FL 33172–2520.
Date Revoked: November 5, 1997.
Reason: Failed to maintain a valid surety bond.

License Number: 2960.
Name: Logistics Forwarding Company, Inc.
Address: 15800 Export Plaza Drive, Suite 200, Houston, TX 77032.
Date Revoked: January 16, 1998.
Reason: Surrendered license voluntarily.

License Number: 3875.
Name: Lucia Alcala d/b/a/ Cheetah Express Freight Forwarding.
Address: 9737 N.W. 41 Street, #370, Miami, FL 33178.
Date Revoked: December 1, 1997.
Reason: Failed to maintain a valid surety bond.

License Number: 4081.
Name: Manfred J. Koberg.
Address: 732 N.W. 76th Ave., Miami, FL 33126.
Date Revoked: December 9, 1997.
Reason: Failed to maintain a valid surety bond.

License Number: 104.
Name: Martin Lewin Transcargo Inc.
Address: 2240 North Figueroa Street, Los Angeles, CA 90065.
Date Revoked: December 31, 1997.
Reason: Failed to maintain a valid surety bond.

License Number: 2998.
Name: Meteor Air Freight, Inc.
Address: 5555 N.W. 72nd Ave., Miami, FL 33166.
Date Revoked: October 18, 1997.
Reason: Failed to maintain a valid surety bond.

License Number: 4078.
Name: Monwar Hussain d/b/a/ Green Peace Shipping Line's.
Address: 25761 Marguerite Parkway, Unit-101, Mission Viejo, CA 92692.

Date Revoked: January 16, 1998.
Reason: Failed to maintain a valid surety bond.

License Number: 1808.
Name: Oakland Van & Storage, Inc.
Address: 26535–A Danti Ct., Hayward, CA 94545.
Date Revoked: December 12, 1997.
Reason: Failed to maintain a valid surety bond.

License Number: 112.
Name: Person & Weidhorn, Inc.
Address: 99 Hudson Street, New York, NY 10013.
Date Revoked: December 24, 1997.
Reason: Failed to maintain a valid surety bond.

License Number: 3064.
Name: Philip & Pines, Inc.
Address: 253 Main Street, Hackensack, NJ 07601.
Date Revoked: February 4, 1998.
Reason: Failed to maintain a valid surety bond.

License Number: 4125.
Name: Quick Cargo Services Corp.
Address: 6940 N.W. 12th Street, Miami, FL 33126.
Date Revoked: January 28, 1998.
Reason: Failed to maintain a valid surety bond.

License Number: 2838.
Name: Rank International Forwarding, Inc.
Address: 1300 N.W. 78th Ave., Miami, FL 33126–1606.
Date Revoked: November 5, 1997.
Reason: Surrendered license voluntarily.

License Number: 2782.
Name: Richard H. Schneider d/b/a R.S. International.
Address: 701 West Manchester Blvd., Suite 203, Inglewood, CA 90301.
Date Revoked: December 13, 1997.
Reason: Surrendered license voluntarily.

License Number: 3640.
Name: Ruben Posada d/b/a Posada International Cargo.
Address: 9432 Bellanca Ave., Suite 200, Los Angeles, CA 90045.
Date Revoked: November 26, 1997.
Reason: Failed to maintain a valid surety bond.

License Number: 3043.
Name: SATCORP Shipping, Inc.
Address: 83–17 241st Street, Bellerose, NY 11426.
Date Revoked: December 2, 1997.
Reason: Failed to maintain a valid surety bond.

License Number: 2306.
Name: Sea Express International, Inc.
Address: 2710 Rand Road, Indianapolis, IN 46241.
Date Revoked: March 11, 1998.
Reason: Failed to maintain a valid surety bond.

License Number: 3586.
Name: Seaway International, Inc.
Address: 1111 Watson Center Road, Unit C, Carson, CA 90745.
Date Revoked: October 20, 1997.
Reason: Failed to maintain a valid surety bond.

License Number: 3917.
Name: Shippers, Inc.
Address: 13077 S.W. 133rd Court, Miami, FL 33186.
Date Revoked: December 3, 1997.
Reason: Failed to maintain a valid surety bond.

License Number: 1755.
Name: Takasuke Okada.
Address: 624 15th Street, Santa Monica, CA 90402.
Date Revoked: January 27, 1998.
Reason: Surrendered license voluntarily.

License Number: 1863.
Name: The Cizzon Corporation.
Address: 160 Martin Lane, Elk Grove Village, IL 60007.
Date Revoked: July 9, 1997.
Reason: Surrendered license voluntarily.

License Number: 3637.
Name: VIL International Inc.
Address: 350 Comstock Street, New Brunswick, NJ 08901.
Date Revoked: January 26 1998.
Reason: Surrendered license voluntarily.

License Number: 2374.
Name: Warner Forwarders, Inc.
Address: 170 Broadway, Suite 1016, New York, NY 10038.
Date Revoked: January 12, 1998.
Reason: Surrendered license voluntarily.

License Number: 3325.
Name: Wisco International Forwarders, Inc.
Address: 331 West Merrick Road, Valley Stream, NY 11580.
Date Revoked: December 29, 1997.
Reason: Surrendered license voluntarily.

Bryant L. VanBrakle,

Director, Bureau of Tariffs, Certification and Licensing.

[FR Doc. 98–9868 Filed 4–14–98; 8:45 am]

BILLING CODE 6730–01–M

FEDERAL RESERVE SYSTEM

Change in Bank Control Notices; Acquisitions of Shares of Banks or Bank Holding Companies

The notificants listed below have applied under the Change in Bank Control Act (12 U.S.C. 1817(j)) and § 225.41 of the Board's Regulation Y (12 CFR 225.41) to acquire a bank or bank holding company. The factors that are considered in acting on the notices are set forth in paragraph 7 of the Act (12 U.S.C. 1817(j)(7)).

The notices are available for immediate inspection at the Federal Reserve Bank indicated. The notices also will be available for inspection at the offices of the Board of Governors. Interested persons may express their views in writing to the Reserve Bank indicated for that notice or to the offices of the Board of Governors. Comments must be received not later than April 30, 1998.

A. Federal Reserve Bank of Minneapolis (Karen L. Grandstrand, Vice President) 90 Hennepin Avenue, P.O. Box 291, Minneapolis, Minnesota 55480-0291:

1. David M Hyduke Revocable Trust, David M. Hyduke, Trustee, St. Paul, Minnesota; to acquire voting shares of Duke Financial Group, Inc., Minneapolis, Minnesota, and thereby indirectly acquire Peoples Bank of Commerce, Cambridge, Minnesota, and State Bank of New Prague, New Prague, Minnesota, Inland Empire National Bank, Riverside, California, and First National Bank of North County, Carlsbad, California.

Board of Governors of the Federal Reserve System, April 10, 1998.

Jennifer J. Johnson,

Deputy Secretary of the Board.

[FR Doc. 98–10022 Filed 4–14–98; 8:45 am]

BILLING CODE 6210–01–F

FEDERAL RESERVE SYSTEM

Change in Bank Control Notices; Acquisitions of Shares of Banks or Bank Holding Companies

The notificants listed below have applied under the Change in Bank Control Act (12 U.S.C. 1817(j)) and § 225.41 of the Board's Regulation Y (12 CFR 225.41) to acquire a bank or bank holding company. The factors that are considered in acting on the notices are set forth in paragraph 7 of the Act (12 U.S.C. 1817(j)(7)).

The notices are available for immediate inspection at the Federal Reserve Bank indicated. The notices also will be available for inspection at the offices of the Board of Governors. Interested persons may express their views in writing to the Reserve Bank indicated for that notice or to the offices of the Board of Governors. Comments must be received not later than April 29, 1998.

A. Federal Reserve Bank of Cleveland (Paul Kaboth, Banking Supervisor) 1455 East Sixth Street, Cleveland, Ohio 44101-2566:

1. Jerome T. Osborne, Sr., Mentor, Ohio; to retain voting shares of GLB Bancorp, Inc., Mentor, Ohio, and thereby indirectly retain voting shares of Great Lakes Bank, Mentor, Ohio.

B. Federal Reserve Bank of St. Louis (Randall C. Sumner, Vice President) 411 Locust Street, St. Louis, Missouri 63102-2034:

1. Kevin J. Kavanaugh, Lawrenceville, Illinois; to acquire additional voting shares of HBancorporation, Inc., Lawrenceville, Illinois, and thereby indirectly acquire additional voting shares of Heritage National Bank, Lawrenceville, Illinois.

Board of Governors of the Federal Reserve System, April 9, 1998.

Jennifer J. Johnson,

Deputy Secretary of the Board.

[FR Doc. 98–9844 Filed 4–14–98; 8:45 am]

BILLING CODE 6210–01–F

FEDERAL RESERVE SYSTEM

Formations of, Acquisitions by, and Mergers of Bank Holding Companies

The companies listed in this notice have applied to the Board for approval, pursuant to the Bank Holding Company Act of 1956 (12 U.S.C. 1841 *et seq.*) (BHC Act), Regulation Y (12 CFR Part 225), and all other applicable statutes and regulations to become a bank holding company and/or to acquire the assets or the ownership of, control of, or the power to vote shares of a bank or bank holding company and all of the banks and nonbanking companies owned by the bank holding company, including the companies listed below.

The applications listed below, as well as other related filings required by the Board, are available for immediate inspection at the Federal Reserve Bank indicated. The application also will be available for inspection at the offices of the Board of Governors. Interested persons may express their views in writing on the standards enumerated in the BHC Act (12 U.S.C. 1842(c)). If the proposal also involves the acquisition of a nonbanking company, the review also includes whether the acquisition of the nonbanking company complies with the standards in section 4 of the BHC Act. Unless otherwise noted, nonbanking activities will be conducted throughout the United States.

Unless otherwise noted, comments regarding each of these applications must be received at the Reserve Bank indicated or the offices of the Board of Governors not later than May 8, 1998.

A. Federal Reserve Bank of St. Louis (Randall C. Sumner, Vice President) 411 Locust Street, St. Louis, Missouri 63102-2034:

1. Southern Development Bancorporation, Inc., Arkadelphia, Arkansas; to acquire at least 67.8 percent of the voting shares of First Delta Corporation, Helena, Arkansas, and thereby indirectly acquire First National Bank of Phillips County, Helena, Arkansas, and Delta State Bank, Elaine, Arkansas.

Board of Governors of the Federal Reserve System, April 9, 1998.

Jennifer J. Johnson,

Deputy Secretary of the Board.

[FR Doc. 98–9845 Filed 4–14–98; 8:45 am]

BILLING CODE 6210–01–F

FEDERAL RESERVE SYSTEM

Notice of Proposals To Engage in Permissible Nonbanking Activities or To Acquire Companies that are Engaged in Permissible Nonbanking Activities

The companies listed in this notice have given notice under section 4 of the Bank Holding Company Act (12 U.S.C. 1843) (BHC Act) and Regulation Y, (12 CFR Part 225) to engage *de novo*, or to acquire or control voting securities or assets of a company, including the companies listed below, that engages either directly or through a subsidiary or other company, in a nonbanking activity that is listed in § 225.28 of Regulation Y (12 CFR 225.28) or that the Board has determined by Order to be closely related to banking and permissible for bank holding companies. Unless otherwise noted, these activities will be conducted throughout the United States.

Each notice is available for inspection at the Federal Reserve Bank indicated. The notice also will be available for inspection at the offices of the Board of Governors. Interested persons may express their views in writing on the question whether the proposal complies with the standards of section 4 of the BHC Act.

Unless otherwise noted, comments regarding the applications must be received at the Reserve Bank indicated or the offices of the Board of Governors not later than April 29, 1998.

A. Federal Reserve Bank of Kansas City (D. Michael Manies, Assistant Vice President) 925 Grand Avenue, Kansas City, Missouri 64198-0001:

1. Bank Capital Corporation, Strasburg, Colorado; to engage *de novo* through its subsidiary, Bank Capital Mortgage, LLC, Strasburg, Colorado, in extending credit and servicing loans activities, pursuant to § 225.28(b)(1) of the Board's Regulation Y.

Board of Governors of the Federal Reserve System, April 9, 1998.

Jennifer J. Johnson,

Deputy Secretary of the Board.

[FR Doc. 98–9843 Filed 4–14–98; 8:45 am]

BILLING CODE 6210–01–F

FEDERAL RESERVE SYSTEM

Federal Open Market Committee; Domestic Policy Directive of February 3-4, 1998.

In accordance with § 271.5 of its rules regarding availability of information (12 CFR part 271), there is set forth below the domestic policy directive issued by the Federal Open Market Committee at its meeting held on February 3-4, 1998.[1] The directive was issued to the Federal Reserve Bank of New York as follows:

The information reviewed at this meeting suggests that economic activity continued to grow rapidly during the closing months of 1997. Nonfarm payroll employment increased sharply further in December after posting very large gains in other recent months; the civilian unemployment rate, at 4.7 percent, remained near its low for the current economic expansion. Industrial production continued to advance at a brisk pace in the fourth quarter. Consumer spending rose appreciably in the quarter, and housing starts remained close to the highs of the current expansion. Business fixed investment weakened following exceptionally strong increases in the second and third quarters; nonfarm inventory accumulation appears to have picked up somewhat. The nominal deficit on U.S. trade in goods and services narrowed significantly on average in October and November from its level in the third quarter. Price inflation has remained subdued despite appreciably faster increases in worker compensation in recent months.

Most interest rates have declined on balance since the day before the Committee meeting on December 16, 1997. Share prices in U.S. equity markets have moved up somewhat over the period; equity markets in some other countries, notably in Asia, have remained volatile. In foreign exchange markets, the value of the dollar has risen

[1] Copies of the Minutes of the Federal Open Market Committee meeting of February 3-4, 1998, which include the domestic policy directive issued at that meeting, are available upon request to the Board of Governors of the Federal Reserve System, Washington, D.C. 20551. The minutes are published in the Federal Reserve Bulletin and in the Board's annual report.

over the intermeeting period relative to the currencies of several Asian developing countries, but it has registered only a small increase on average in relation to the currencies of major industrial nations.

M2 and M3 continued to grow at relatively rapid rates in December and apparently also in January. From the fourth quarter of 1996 to the fourth quarter of 1997, M2 expanded at a rate somewhat above the upper bound of its range for the year and M3 at a rate substantially above the upper bound of its range. Total domestic nonfinancial debt expanded in 1997 at a pace somewhat below the middle of its range.

The Federal Open Market Committee seeks monetary and financial conditions that will foster price stability and promote sustainable growth in output. In furtherance of these objectives, the Committee at this meeting established ranges for growth of M2 and M3 of 1 to 5 percent and 2 to 6 percent respectively, measured from the fourth quarter of 1997 to the fourth quarter of 1998. The range for growth of total domestic nonfinancial debt was set at 3 to 7 percent for the year. The behavior of the monetary aggregates will continue to be evaluated in the light of progress toward price level stability, movements in their velocities, and developments in the economy and financial markets.

In the implementation of policy for the immediate future, the Committee seeks conditions in reserve markets consistent with maintaining the federal funds rate at an average of around 5-1/2 percent. In the context of the Committee's long-run objectives for price stability and sustainable economic growth, and giving careful consideration to economic, financial, and monetary developments, a slightly higher federal funds rate or a slightly lower federal funds rate might be acceptable in the intermeeting period. The contemplated reserve conditions are expected to be consistent with some moderation in the growth in M2 and M3 over coming months.

By order of the Federal Open Market Committee, April 6, 1998.

Donald L. Kohn,

Secretary, Federal Open Market Committee.

[FR Doc. 98–9886 Filed 4–14–98; 8:45 am]

BILLING CODE 6210–01–F

FEDERAL RESERVE SYSTEM

Sunshine Act Meeting

TIME AND DATE: 11:00 a.m., Monday, April 20, 1998.

PLACE: Marriner S. Eccles Federal Reserve Board Building, 20th and C Streets, N.W., Washington, D.C. 20551.

STATUS: Closed.

MATTERS TO BE CONSIDERED:

1. Personnel actions (appointments, promotions, assignments, reassignments, and salary actions) involving individual Federal Reserve System employees.

2. Any items carried forward from a previously announced meeting.

CONTACT PERSON FOR MORE INFORMATION: Joseph R. Coyne, Assistant to the Board; 202–452–3204.

SUPPLEMENTARY INFORMATION: You may call 202–452–3206 beginning at approximately 5 p.m. two business days before the meeting for a recorded announcement of bank and bank holding company applications scheduled for the meeting; or you may contact the Board's Web site at http://www.bog.frb.fed.us for an electronic announcement that not only lists applications, but also indicates procedural and other information about the meeting.

Dated: April 10, 1998.

Jennifer J. Johnson,

Deputy Secretary of the Board.

[FR Doc. 98–10042 Filed 4–10–98; 4:30 pm]

BILLING CODE 6210–01–P

DEPARTMENT OF HEALTH AND HUMAN SERVICES

Centers for Disease Control and Prevention

Advisory Committee on Immunization Practices; Charter Renewal

This gives notice under the Federal Advisory Committee Act (Pub. L. 92–463) of October 6, 1972, that the Advisory Committee on Immunization Practices (ACIP), Centers for Disease Control and Prevention (CDC), Department of Health and Human Services, has been renewed for a 2-year period beginning April 1, 1998, through April 1, 2000.

For further information, contact Dixie E. Snider, Jr., M.D., Executive Secretary, ACIP, CDC, 1600 Clifton Road, NE, (M/S D–50), telephone 404/639–7240 or fax 404/639–7342.

Dated: April 9, 1998.

Nancy C. Hirsch,

Acting Director, Management Analysis and Services Office, Centers for Disease Control and Prevention (CDC).

[FR Doc. 98–9912 Filed 4–14–98; 8:45 am]

BILLING CODE 4861–18–P

DEPARTMENT OF HEALTH AND HUMAN SERVICES

Centers for Disease Control and Prevention

[Announcement 98023]

Human Immunodeficiency Virus (HIV), Sexually Transmitted Diseases (STDs), and Tuberculosis (TB) Related Applied Research Projects

A. Purpose

The Centers for Disease Control and Prevention (CDC) announces the availability of funds beginning in fiscal year (FY) 1998 for cooperative agreements to conduct human immunodeficiency virus (HIV), sexually transmitted diseases (STDs), and tuberculosis (TB) related applied research into the control and prevention of HIV, STDs and TB. The purpose of this program is to encourage new and innovative methods to further the prevention of HIV, STDs and TB infection. Projects that will be considered for funding are applied research into the control and prevention of HIV, STDs, or TB. This program addresses the ''Healthy People 2000'' priority area(s) HIV Infection, Sexually Transmitted Diseases, and Immunization and Infectious Diseases.

National Program Goals

CDC's national strategic goals for the programs supported by the National Center for HIV, STDs and TB Prevention are:

1. Increase public understanding of, involvement in, and support for HIV, STDs, and TB prevention.

2. Ensure completion of therapy for persons identified with active TB or TB infection.

3. Prevent or reduce behaviors or practices that place persons at risk for HIV and STDs infection or, if already infected, place others at risk.

4. Increase individual knowledge of HIV serostatus and improve referral systems to appropriate prevention and treatment services.

5. Assist in building and maintaining the necessary State, local, and community infrastructure and technical capacity to carry out necessary prevention programs.

6. Strengthen the current systems and develop new systems to accurately monitor HIV, STDs, and TB, as a basis for assessing and directing prevention programs.

B. Eligible Applicants

Eligible applicants will include universities, colleges, research institutions, hospitals, public and

private non-profit organizations, community-based, national, and regional organizations, State and local governments or their bona fide agents or instrumentalities, federally recognized Indian Tribal governments, Indian tribes or organizations, and small, minority- and/or women owned non-profit businesses.

Note: Organizations described in section 501(c)(4) of the Internal Revenue Code of 1986 that engage in lobbying are not eligible to receive Federal grant/cooperative agreement funds.

C. Availability of Funds

Approximately $500,000 is available in FY 1998 to fund approximately four awards. It is expected that the average award will be $150,000, ranging from $100,000—$300,000. Funding estimates are subject to change. It is expected that awards will begin in September, 1998 and will be made for a 12 month budget period within a project period of up to three years. Funding will be available during the fiscal year for applications submitted that are consistent with the National Center for HIV, STD, and TB Prevention (NCHSTP) National Program Goals. Funding estimates are subject to change. Continued support in future years will be based on the availability of funds and success in demonstrating progress toward achievement of objectives.

Program Priority Areas

1. The impact of managed care on TB control activities.
2. The impact of behavioral intervention in correctional settings on the community at large or the impact of corrections, public health, and substance abuse collaborations on the health of the community.
3. The impact of peer and community education programs on health seeking behaviors of high risk populations, women, youth, and substance abusers.
4. Correctional health care, especially the impact of managed care or privatized care providers, and its impact on health care utilization in the community.
5. The relationship between drug and alcohol use and sexual behavior and high risk sexual behavior among IDUs, sexual partners of IDUs, women, adolescents, and men who have sex with men.
6. The evaluation of non-abstinence based strategies for drug users who cannot or are unwilling to stop drug use.
7. The development, piloting, evaluation, or technology transfer of innovative behavioral interventions designed to reduce the transmission or acquisition of HIV among vulnerable populations.
8. The development of new methods for estimating HIV incidence, assessment of HIV incidence in selected, high-risk populations or social networks in geographically-defined communities where HIV incidence is known or expected to be high, or use of HIV incidence data for evaluating prevention interventions.
9. The development, evaluation, or improvement of HIV prevention interventions.
10. Develop a knowledge base to improve access to care of HIV-infected persons and to reduce HIV-associated morbidity and mortality among persons in care.
11. Among HIV-infected persons in care, prevent development of opportunistic infections and prevent/delay progression to AIDS and death.

CDC may announce additional priority areas through both the **Federal Register** and the Internet.

D. Program Requirements

1. Recipient activities to achieve the purposes of this program will vary by project. CDC will be responsible for the activities under CDC Activities.

1. Recipient Activities

A. Complete the development of the research protocol.

B. Carry out the activities according to the approved protocol.

C. Ensure that appropriate approvals are secured for the protection of human subjects, Office of Management and Budget and Paperwork Reduction Act, privacy, confidentiality, and data security.

D. Compile and disseminate findings.

2. CDC Activities

A. Monitor and evaluate scientific and operational accomplishments of the project through periodic site visits, frequent telephone calls, and review of technical reports and interim data analysis.

B. For recipients whose project involves collaboration with a State or local health department, CDC will assist in facilitating the planning and implementation of the necessary linkages with local or State health departments and assist with the developmental strategies for applied clinical or prevention oriented research programs.

C. Facilitate the technological and methodological dissemination of successful prevention and intervention models among appropriate target groups, such as, State and local health departments, community based organizations, and other health professionals.

D. Participate in planning, implementing, and evaluating strategies and protocols.

E. Application Content

1. Letter of Intent (LOI)

Potential applicants must submit an original and two copies of a two-page typewritten Letter of Intent (LOI) that briefly describes the title of the project, purpose and need for the project as well as its relationship to the National Program Goals, the estimated total cost of the proposed project, and the dollar amount and percentage of the total cost being requested from CDC. Current recipients of CDC funding must provide the award number and title of the funded programs. No attachments, booklets, or other documents accompanying the LOI will be considered.

LOI's will be reviewed by CDC program staff and an invitation to submit a full application will be made based on the documented need for the proposed project, contribution to the NCHSTP National Program Goals, and the availability of funds. LOI's may focus individually on HIV, STD, or TB, or may address more than one programmatic priority area.

An invitation to submit a full application does not constitute a commitment by CDC to fund the applicant.

2. Application

Applications may be submitted only after a Letter of Intent has been approved by CDC and a written invitation from CDC has been extended to the prospective applicant. Applicants who are invited to submit a full application must use Form PHS 398 (OMB Number 0925–0001), and submit an original and five copies. The application narrative should consist of:

A. Abstract (Not to exceed 1 page): An executive summary of your program covered under this announcement.

B. Program Plan (Not to exceed 10 pages): In developing the application under this announcement, please review the recipient activities and, in particular, evaluation criteria and respond concisely and completely.

C. Budget: Submit an itemized budget and supporting justification that is consistent with your proposed program plan.

F. Submission Requirements and Deadlines

1. Letter of Intent (LOI)

ONE ORIGINAL AND TWO COPIES of the LOI must be postmarked on or before May 18, 1998. (FACSIMILES ARE NOT ACCEPTABLE.)

2. Application

ONE ORIGINAL AND FIVE COPIES of the invited applications must be submitted on Form PHS 398 (OMB Number 0925–0001) and must be postmarked on or before July 20, 1998.

3. Address for Submission of Letter of Intent and Invited Application

Juanita Dangerfield, Grants Management Specialist, Grants Management Branch, Centers for Disease Control and Prevention (CDC), 255 East Paces Ferry Road NE., Room 300, Mailstop E–15, Atlanta, Georgia 30305

4. Application Deadline

Letters of Intent and Applications shall be considered as meeting the deadline if they are either:

a. Received on or before the deadline date, or

b. Postmarked on or before the deadline date and received in time for submission to the objective review committee. (Applicants must request a legibly dated U.S. Postal Service postmark or obtain a legibly dated receipt from a commercial carrier or U.S. Postal Service. Private metered postmarks shall not be acceptable as proof of timely mailing.)

5. Late Applications and Letters of Intent

Applications that do not meet the criteria in 4a or 4b are considered late applications and will be returned to the applicant without review.

G. Evaluation Criteria

Applications responding to this announcement will be evaluated individually according to the following criteria.

1. The inclusion of a brief review of the scientific literature pertinent to the study being proposed and specific research questions or hypotheses that will guide the research. The originality and need for the proposed research, the extent to which it does not replicate past or present research efforts, and how findings will be used to guide prevention and control efforts. (20 points)

2. The quality of the plans to develop and implement the study, including the degree to which the applicant has met the CDC Policy requirements regarding the inclusion of women, ethnic, and racial groups in the proposed research. This includes:

a. The proposed plan for the inclusion of both sexes and racial and ethnic minority populations for appropriate representation.

b. The proposed justification when representation is limited or absent.

c. A statement as to whether the design of the study is adequate to measure differences when warranted.

d. A statement as to whether the plans for recruitment and outreach for study participants include the process of establishing partnerships with community(ies) and recognition of mutual benefits. (20 points)

3. Extent to which proposed objectives will further the NCHSTP National Program Goals. (20 points)

4. Extent to which proposed activities, if well executed, are capable of attaining project objectives. (20 points)

5. Extent to which personnel involved in this project are qualified, including evidence of past achievements appropriate to the project and realistic and sufficient percentage-time commitments. Evidence of adequacy of facilities and other resources needed to carry out the project. (20 points)

6. Other (not scored)

a. Budget: Will be reviewed to determine the extent to which it is reasonable, clearly justified, consistent with the intended use of the funds, and allowable. All budget categories should be itemized.

b. Human Subjects: Whether or not exempt from the Department of Health and Human Services regulations, are procedures adequate for the protection of human subjects? Recommendations on the adequacy of protections include the following:

(1) Protections appear adequate and there are no comments to make or concerns to raise, (2) protections appear adequate, but there are comments regarding the protocol, (3) protections appear inadequate and the Objective Review Group (ORG) has concerns related to human subjects; or (4) disapproval of the application is recommended because the research risks are sufficiently serious and protection against the risks are inadequate as to make the entire application unacceptable.

Funding decisions on approved applications will depend on the area of interest of the proposals, their relationship to NCHSTP National Program Goals, the specific research questions being proposed, and the quality of the application.

H. Other Requirements

Technical Reporting Requirements

Provide CDC with original plus two copies of:

1. An annual progress report,

2. Financial status report, no more than 90 days after the end of the budget period, and

3. Final financial report and performance report, no more than 90 days after the end of the project period.

Send all reports to Juanita Dangerfield, Grants Management Specialist, Grants Management Branch, Procurement and Grants Office, Announcement 98023, Centers for Disease Control and Prevention (CDC), 255 East Paces Ferry Road, NE., Mail Stop E–15, Room 300, Atlanta, GA 30305–2209.

For descriptions of the following Other Requirements, see Attachment I:

1. AR98–1—Human Subjects Requirements
2. AR98–2—Inclusion of Women and Racial and Ethnic Minorities in Research Requirements
3. AR98–4—HIV/AIDS Confidentiality Provisions
4. AR98–5—HIV Program Review Panel Requirements
5. AR98–6—Patient Care Prohibitions
6. AR98–9—Paperwork Reduction Act Requirements
7. AR98–10—Smoke-Free Workplace Requirements
8. AR98–11—Healthy People 2000
9. AR98–12—Lobbying Restrictions

I. Authority and Catalog of Federal Domestic Assistance Number

This program is authorized under the Public Health Service Act, sections 317(k)(2) (42 U.S.C. 247b(k)(2)), 317E (42 U.S.C. 247b–6) and 318 of the Public Health Service Act, (42 U.S.C. 247c), as amended. Regulations governing grants for STD research are codified in part 51b, subparts A and F of Title 42, Code of Federal Regulations. The Catalog of Federal Domestic Assistance numbers are 93.941, HIV Demonstration, Research, Public and Professional Education; 93.943, Epidemiologic Research Studies of Acquired Immunodeficiency Virus (AIDS) and Human Immunodeficiency Virus (HIV) Infection in Selected Population Groups; 93.947, Tuberculosis Demonstration, Research, Public and Professional Educations; and 93.978, Prevention Health Services—Sexually Transmitted Diseases Research, Demonstrations, and Public Information and Education Grants.

J. Where to Obtain Additional Information

To receive additional written information, call 1–888–472–6874. You will be asked to leave your name, address, and phone number, and refer to Announcement Number 98023. You will receive a complete program announcement. CDC will not send application kits by facsimile or express mail unless the cost for the latter is paid by the addressee.

This and other CDC announcements are also available through the CDC homepage on the Internet. The address for the CDC homepage is http://www.cdc.gov.

Business management technical assistance may be obtained from Juanita Dangerfield, Grants Management Specialist, Grants Management Branch, Centers for Disease Control and Prevention (CDC), Procurement and Grants Office, 255 East Paces Ferry Road NE., Room 300, Mailstop E–15, Atlanta, GA 30305, telephone (404) 842–6577, or facsimile at (404) 842–6513, or INTERNET address: jdd2@cdc.gov.

Programmatic technical assistance may be obtained from the National Center for HIV, STDs and TB Prevention, Centers for Disease Control and Prevention (CDC), Atlanta, GA 30303, for HIV, contact Carol Aloisio, telephone (404) 639–0902; for STD, contact Sevgi Aral, telephone (404) 639–8259; for TB, contact Bess Miller, telephone (404) 639–8120.

Please refer to Announcement 98023 when requesting information and submitting an application.

Dated: April 9, 1998.

Joseph R. Carter,

Acting Associate Director for Management and Operations, Centers for Disease Control and Prevention (CDC).

[FR Doc. 98–9909 Filed 4–14–98; 8:45 am]

BILLING CODE 4163–18–P

DEPARTMENT OF HEALTH AND HUMAN SERVICES

Centers for Disease Control and Prevention

Board of Scientific Counselors, National Center for Infectious Diseases: Meeting

In accordance with section 10(a)(2) of the Federal Advisory Committee Act (Pub. L. 92–463), the Centers for Disease Control and Prevention (CDC) announces the following committee meeting.

Name: Board of Scientific Counselors, National Center for Infectious Diseases (NCID).

Times and Dates: 10 a.m.–5:30 p.m., April 30, 1998. 8:30 a.m.–2:30 p.m., May 1, 1998.

Place: CDC, Auditorium B, 1600 Clifton Road, NE, Atlanta, Georgia 30333.

Status: Open to the public, limited only by the space available.

Purpose: The Board of Scientific Counselors, NCID, provides advice and guidance to the Director, CDC, and Director, NCID, in the following areas: program goals and objectives; strategies; program organization and resources for infectious disease prevention and control; and program priorities.

Matters To Be Discussed: Agenda items will include:

1. NCID Update
2. Program Updates:
   Division of Quarantine
   Division of Viral and Rickettsial Diseases
   Division of Bacterial and Mycotic Diseases
   Division of AIDS, Tuberculosis, and STD Laboratory Research
3. Emerging Infectious Disease Plan—Update
4. Core Capabilities for Public Health Laboratories
5. Update: Rift Valley Fever
6. Scientific Updates: Late Breakers
7. Discussion and Recommendations

Other agenda items include announcements/introductions; follow-up on actions recommended by the Board in December 1997; and consideration of future directions, goals, and recommendations.

Agenda items are subject to change as priorities dictate.

Written comments are welcome and should be received by the contact person listed below prior to the opening of the meeting.

Contact Person for More Information: Diane S. Holley, Office of the Director, NCID, CDC, Mailstop C–20, 1600 Clifton Road, NE, Atlanta, Georgia 30333, telephone 404/639–0078.

Dated: April 8, 1998.

Nancy C. Hirsch,

Acting Director, Management Analysis and Services Office, Centers for Disease Control and Prevention (CDC).

[FR Doc. 98–9910 Filed 4–14–98; 8:45 am]

BILLING CODE 4163–18–P

DEPARTMENT OF HEALTH AND HUMAN SERVICES

Administration for Children and Families

[CFDA 93.600 Head Start, Head Start Act as Amended]

Fiscal Year 1998 Discretionary Announcement for Head Start Partnerships With Historically Black Colleges and Universities

AGENCY: Administration on Children, Youth and Families, ACF, DHHS.

ACTION: Notice of announcement of the availability of funds and request for applications for training grants for Historically Black Colleges and Universities in Partnership with Head Start and Early Head Start Grantees.

SUMMARY: The Administration for Children and Families, Administration on Children, Youth and Families announces the availability of funds for Head Start Training Partnerships with Historically Black Colleges and Universities. The purpose is to utilize the capabilities of these institutions of higher education to improve the quality and long-term effectiveness of Head Start and Early Head Start by developing models of academic training and forming partnerships between the HBCUs and Head Start and Early Head Start.

DATES: The closing date for receipt of applications is 5:00 p.m. EST June 15, 1998.

ADDRESSES: Applications, including all necessary forms can be downloaded from the Head Start web site at: www.acf.dhhs.gov/programs/hsb.

Hard copies of the program announcement and application kit may be obtained by writing or calling: Head Start Partnerships with Historically Black Colleges and Universities (HBCUs), Administration on Children, Youth and Families Operations Center, 1225 Jefferson Davis Highway, Suite 415, Arlington, VA 22202. The telephone number is 1–800–351–2293.

FOR FURTHER INFORMATION: Same address and telephone number as indicated under addresses above.

Eligible Applicants: Historically Black Colleges and Universities as defined in Executive Order 12677 which offer courses of study in the areas of human services delivery, early childhood education and care, health care services, community development and/or human resource development. Current grantees are not eligible to apply for this wave of applications.

Project Duration: Awards, on a competitive basis will be for a one-year budget period; project periods will be for four years.

Federal Share of Project Costs: The maximum Federal share for each project is not to exceed $125,000 per year. The annual budget should include the cost for two staff members to attend a conference in the Washington, DC area. Although there are no matching requirements, applicants are encouraged to provide non-Federal contributions to the project.

Estimated Number of Projects To Be Funded: It is anticipated that up to five projects will be funded.

Statutory Authority: The Head Start Act, as amended, 42 U.S.C. 9801 *et seq.*

Dated: April 7, 1998.

James A. Harrell,

Deputy Commissioner, Administration on Children, Youth and Families.

[FR Doc. 98–9941 Filed 4–14–98; 8:45 am]

BILLING CODE 4184–01–P

DEPARTMENT OF HEALTH AND HUMAN SERVICES

Food and Drug Administration

[Docket No. 97E–0144]

Determination of Regulatory Review Period for Purposes of Patent Extension; ZAGAM®

AGENCY: Food and Drug Administration, HHS.

ACTION: Notice.

SUMMARY: The Food and Drug Administration (FDA) has determined the regulatory review period for ZAGAM® and is publishing this notice of that determination as required by law. FDA has made the determination because of the submission of an application to the Commissioner of Patents and Trademarks, Department of Commerce, for the extension of a patent which claims that human drug product.

ADDRESSES: Written comments and petitions should be directed to the Dockets Management Branch (HFA–305), Food and Drug Administration, 12420 Parklawn Dr., rm. 1–23, Rockville, MD 20857.

FOR FURTHER INFORMATION CONTACT: Brian J. Malkin, Office of Health Affairs (HFY–20), Food and Drug Administration, 5600 Fishers Lane, Rockville, MD 20857, 301–827–6620.

SUPPLEMENTARY INFORMATION: The Drug Price Competition and Patent Term Restoration Act of 1984 (Pub. L. 98–417) and the Generic Animal Drug and Patent Term Restoration Act (Pub. L. 100–670) generally provide that a patent may be extended for a period of up to 5 years so long as the patented item (human drug product, animal drug product, medical device, food additive, or color additive) was subject to regulatory review by FDA before the item was marketed. Under these acts, a product's regulatory review period forms the basis for determining the amount of extension an applicant may receive.

A regulatory review period consists of two periods of time: A testing phase and an approval phase. For human drug products, the testing phase begins when the exemption to permit the clinical investigations of the drug becomes effective and runs until the approval phase begins. The approval phase starts with the initial submission of an application to market the human drug product and continues until FDA grants permission to market the drug product. Although only a portion of a regulatory review period may count toward the actual amount of extension that the Commissioner of Patents and Trademarks may award (for example, half the testing phase must be subtracted as well as any time that may have occurred before the patent was issued), FDA's determination of the length of a regulatory review period for a human drug product will include all of the testing phase and approval phase as specified in 35 U.S.C. 156(g)(1)(B).

FDA recently approved for marketing the human drug product ZAGAM® (sparfloxacin). ZAGAM® is indicated for community-acquired pneumonia and acute bacterial exacerbations of chronic bronchitis. Subsequent to this approval, the Patent and Trademark Office received a patent term restoration application for ZAGAM® (U.S. Patent No. 4,795,751) from Dainippon Pharmaceutical Co., Ltd., and the Patent and Trademark Office requested FDA's assistance in determining this patent's eligibility for patent term restoration. In a letter dated May 21, 1997, FDA advised the Patent and Trademark Office that this human drug product had undergone a regulatory review period and that the approval of ZAGAM® represented the first permitted commercial marketing or use of the product. Shortly thereafter, the Patent and Trademark Office requested that FDA determine the product's regulatory review period.

FDA has determined that the applicable regulatory review period for ZAGAM® is 2,030 days. Of this time, 1,671 days occurred during the testing phase of the regulatory review period, while 359 days occurred during the approval phase. These periods of time were derived from the following dates:

1. *The date an exemption under section 505 of the Federal Food, Drug, and Cosmetic Act (21 U.S.C. 355) became effective:* June 1, 1991. FDA has verified the applicant's claim that the date the investigational new drug application became effective was on June 1, 1991.

2. *The date the application was initially submitted with respect to the human drug product under section 505 of the Federal Food, Drug, and Cosmetic Act:* December 27, 1995. FDA has verified the applicant's claim that the new drug application (NDA) for ZAGAM® (NDA 20–677) was initially submitted on December 27, 1995.

3. *The date the application was approved:* December 19, 1996. FDA has verified the applicant's claim that NDA 20–677 was approved on December 19, 1996.

This determination of the regulatory review period establishes the maximum potential length of a patent extension. However, the U.S. Patent and Trademark Office applies several statutory limitations in its calculations of the actual period for patent extension. In its application for patent extension, this applicant seeks 1,194 days of patent term extension.

Anyone with knowledge that any of the dates as published is incorrect may, on or before June 15, 1998, submit to the Dockets Management Branch (address above) written comments and ask for a redetermination. Furthermore, any interested person may petition FDA, on or before October 13, 1998, for a determination regarding whether the applicant for extension acted with due diligence during the regulatory review period. To meet its burden, the petition must contain sufficient facts to merit an FDA investigation. (See H. Rept. 857, part 1, 98th Cong., 2d sess., pp. 41–42, 1984.) Petitions should be in the format specified in 21 CFR 10.30.

Comments and petitions should be submitted to the Dockets Management Branch (address above) in three copies (except that individuals may submit single copies) and identified with the docket number found in brackets in the heading of this document. Comments and petitions may be seen in the Dockets Management Branch between 9 a.m. and 4 p.m., Monday through Friday.

Dated: April 8, 1998.

Thomas J. McGinnis,

Deputy Associate Commissioner for Health Affairs.

[FR Doc. 98–9864 Filed 4–14–98; 8:45 am]

BILLING CODE 4160–01–F

DEPARTMENT OF HEALTH AND HUMAN SERVICES

Food and Drug Administration

Pulmonary-Allergy Drugs Advisory Committee Meeting; Cancellation

AGENCY: Food and Drug Administration, HHS.

ACTION: Notice.

SUMMARY: The Food and Drug Administration (FDA) is cancelling the meeting of the Pulmonary-Allergy Drugs Advisory Committee scheduled for April 20, 1998. The meeting was announced in the **Federal Register** of March 19, 1998 (63 FR 13413).

FOR FURTHER INFORMATION CONTACT: Leander B. Madoo, Center for Drug Evaluation and Research (HFD–21),

Food and Drug Administration, 5600 Fishers Lane, Rockville, MD 20857, 301–443–5455, or FDA Advisory Committee Information Line, 1–800–741–8138 (301–443–0572 in the Washington, DC area), code 12545.

Dated: April 8, 1998.

Michael A. Friedman,

Deputy Commissioner for Operations.

[FR Doc. 98–9866 Filed 4–14–98; 8:45 am]

BILLING CODE 4160–01–F

DEPARTMENT OF HEALTH AND HUMAN SERVICES

National Institutes of Health

Office of AIDS Research, Office of the Director; Notice of Meeting

Pursuant to Pub. L. 92–463, notice is hereby given of the meeting of the Office of AIDS Research Advisory Council on April 29, 1998, National Institutes of Health, Building 31, C Wing, Conference Room 6, 9000 Rockville Pike, Bethesda, Maryland 20892.

The meeting will be open to the public from 9:00 a.m. until adjournment. Attendance by the public will be limited to space available. The purpose of the meeting will be to review and obtain the Council's advice on the following agenda items: (1) a report of the Acting Director, OAR; (2) a review of the FY 2000 NIH Plan for HIV-Related Research; (3) updates from the AIDS Vaccine Research Committee, the Prevention Science Working Group, and the Therapeutics Research Working Group; and (4) an overview of international NIH AIDS research programs.

Copies of the meeting agenda and roster of council members will be furnish upon request by Ms. Deborah Kraut, Program Analyst, Office of AIDS Research (OAR), 9000 Rockville Pike, Building 31, Room 4B62, National Institutes of Health, Bethesda, Maryland, Telephone (301) 402–8655 and Dr. Robert W. Eisinger, Head, Science Policy and Analysis Section, OAR, Telephone (301) 402–8655 will provide substantive program information.

Individuals who plan to attend and need special assistance, such as sign language interpretation or other reasonable accommodations, should contact Ms. Kraut no later than April 22, 1998.

Dated: April 9, 1998.

LaVerne Stringfield,

Committee Management Officer, NIH.

[FR Doc. 98–9984 Filed 4–14–98; 8:45 am]

BILLING CODE 4140–01–M

DEPARTMENT OF HEALTH AND HUMAN SERVICES

National Institutes of Health

National Institute on Alcohol Abuse and Alcoholism; Notice of Closed Meeting

Pursuant to Section 10(d) of the Federal Advisory Committee Act, as amended (5 U.S.C. Appendix 2), notice is hereby given of the following meeting:

Purpose/Agenda: To review and evaluate contract proposals.

Name of Committee: National Institute on Alcohol Abuse and Alcoholism Special Emphasis Panel.

Date of Meeting: April 15, 1998 (Telephone Conference).

Time: 11:00 a.m.

Place of Meeting: Willco Building, 6000 Executive Boulevard, Suite 400, Rockville, MD 20892–7003.

Contact Person: Sean O'Rourke, 6000 Executive Boulevard, Suite 409, Rockville, MD 20892–7003, 301–443–2861.

This notice is being published less than 15 days prior to the meeting due to the urgent need to meet timing limitations imposed by the review and funding cycle.

The meeting will be closed in accordance with the provisions set forth in sections 552b(c)(4) and 552b(c)(6), Title 5 U.S.C. Applications and/or proposals and the discussions could reveal confidential trade secrets or commercial property such as patentable material, and personal information concerning individuals associated with the applications and/or proposals, the disclosure of which would constitute a clearly unwarranted invasion of personal privacy.

(Catalog of Federal Domestic Assistance, Program Nos. 93.271, Alcohol Research Career Development Awards for Scientists and Clinicians; 93.272, Alcohol National Research Service Awards for Research Training; 93.273, Alcohol Research Programs; and 93.891, Alcohol Research Center Grants; National Institutes of Health)

Dated: April 9, 1998.

LaVerne Y. Stringfield,

Committee Management Officer, NIH.

[FR Doc. 98–9992 Filed 4–14–98; 8:45 am]

BILLING CODE 4140–01–M

DEPARTMENT OF HEALTH AND HUMAN SERVICES

National Institutes of Health

National Cancer Institute; Notice of Closed Meeting

Pursuant to Section 10(d) of the Federal Advisory Committee Act, as amended (5 U.S.C. Appendix 2), notice is hereby given of the following National Cancer Institute Special Emphasis Panel (SEP) meeting:

Name of SEP: Phase II Study of Arsenic Trioxide in Leukemia Telephone Conference Call.

Date: April 27, 1998.

Time: 12:30 p.m. to Adjournment.

Place: National Cancer Institute, Executive Plaza North, Room 635C, 6130 Executive Boulevard, Bethesda, MD 20892.

Contact Person: David Irwin, Ph.D., Scientific Review Administrator, National Cancer Institute, NIH, Executive Plaza North, Room 635C, 6130 Executive Boulevard, MSC 7408, Bethesda, MD 20892–7408, Telephone: 301/402–0371.

Purpose/Agenda: To review, discuss and evaluate grant applications.

This notice is being published less than 15 days prior to the meeting due to the urgent need to meet timing limitations imposed by the review and funding cycle.

The meeting will be closed in accordance with the provisions set forth in secs. 552b(c)(4) and 552b(c)(6), Title 5, U.S.C. Applications and the discussions could reveal confidential trade secrets or commercial property such as patentable material and personal information concerning individuals associated with the applications, the disclosure of which would constitute a clearly unwarranted invasion of personal privacy.

(Catalog of Federal Domestic Assistance Program Numbers: 93.393, Cancer Cause and Prevention Research; 93.394, Cancer Detection and Diagnosis Research; 93.395, Cancer Treatment Research; 93.396, Cancer Biology Research; 93.397, Cancer Centers Support; 93.398, Cancer Research Manpower; 93.399, Cancer Control)

Dated: April 9, 1998.

LaVerne Y. Stringfield,

Committee Management Officer, NIH.

[FR Doc. 98–9983 Filed 4–14–98; 8:45 am]

BILLING CODE 4140–01–M

DEPARTMENT OF HEALTH AND HUMAN SERVICES

National Institutes of Health

National Cancer Institute; Notice of Meeting

Pursuant to Section 10(a) of the Federal Advisory Committee Act, as amended (5 U.S.C. Appendix 2), notice is hereby given of a teleconference meeting of the Advisory Committee to the Director, National Cancer Institute.

The entire meeting will be open to the public as indicated below, with attendance by the public limited to space available. Individuals who plan to attend and need special assistance, such as sign language interpretation or other reasonable accommodations, should notify Linda Quick-Cameron, Committee Management Officer, National Cancer Institute, Executive Plaza North, Room 609, 6130 Executive Blvd., MSC 7410, Bethesda, MD 20892–7410 (301/496–5708). A summary of the

meeting and the roster of committee members will be provided upon written request. Other information pertaining to the meeting may be obtained from the contact person indicated below.

Name of Committee: Advisory Committee to the Director, National Cancer Institute.
Date: May 14, 1998.
Place: National Institutes of Health, Building 31, Room 11A10, 9000 Rockville Pike, Bethesda, MD 20892.
Open: 2:00 p.m. to 3:00 p.m.
Agenda: Update on the progress of the NCI working groups.
Contact Person: Susan J. Waldrop, Executive Secretary, National Institutes of Health, National Cancer Institute, Building 31, Room 11A03, Bethesda, MD 20892, (301) 496–1458.

(Catalog of Federal Domestic Assistance Program Numbers: 93.393, Cancer Cause and Prevention Research; 93.394, Cancer Detection and Diagnosis Research; 93.395, Cancer Treatment Research; 93.396, Cancer Biology Research; 93.397, Cancer Centers Support; 93.398, Cancer Research Manpower; 93.399, Cancer Control)

Dated: April 8, 1998.

LaVerne Y. Stringfield,

Committee Management Officer, NIH.

[FR Doc. 98–9985 Filed 4–14–98; 8:45 am]

BILLING CODE 4140–01–M

DEPARTMENT OF HEALTH AND HUMAN SERVICES

National Institutes of Health

National Cancer Institute; Notice of Closed Meeting

Pursuant to Section 10(d) of the Federal Advisory Committee Act, as amended (5 U.S.C. Appendix 2), notice is hereby given of the following National Cancer Institute Special Emphasis Panel (SEP) meeting:

Name of SEP: Cooperative Breast Cancer Tissue Registry.
Date: April 24, 1998.
Time: 9:00 a.m. to Adjournment.
Place: National Cancer Institute, 6130 Executive Boulevard, Executive Plaza North, Conference Room J, Rockville, MD 20852.
Contact Person: Wilna Woods, Ph.D., Scientific Review Administrator, National Cancer Institute, NIH, Executive Plaza North, Room 622B, 6130 Executive Boulevard, Bethesda, MD 20892–7405, Telephone: 301/496–7903.
Purpose/Agenda: To review, discuss and evaluate grant applications.

This notice is being published less than 15 days prior to the meeting due to the urgent need to meet timing limitations imposed by the review and funding cycle.

The meeting will be closed in accordance with the provisions set forth in secs. 552b(c)(4) and 552b(c)(6), Title 5, U.S.C. Applications and the discussions could reveal confidential trade secrets or commercial property such as patentable material and personal information concerning individuals associated with the applications, the disclosure of which would constitute a clearly unwarranted invasion of personal privacy.

(Catalog of Federal Domestic Assistance Program Numbers: 93.393, Cancer Cause and Prevention Research; 93.394, Cancer Detection and Diagnosis Research; 93.395, Cancer Treatment Research; 93.396, Cancer Biology Research; 93.397, Cancer Centers Support; 93.398, Cancer Research Manpower; 93.399, Cancer Control)

Dated: April 8, 1998.

LaVerne Y. Stringfield,

Committee Management Officer, NIH.

[FR Doc. 98–9986 Filed 4–14–98; 8:45 am]

BILLING CODE 4140–01–M

DEPARTMENT OF HEALTH AND HUMAN SERVICES

National Institutes of Health

National Cancer Institute; Notice of Closed Meeting

Pursuant to Section 10(d) of the Federal Advisory Committee Act, as amended (5 U.S.C. Appendix 2), notice is hereby given of the following National Cancer Institute Special Emphasis Panel (SEP) meeting:

Name of SEP: Grant Applications for Cancer Education Programs Telephone Conference Call.
Date: April 15, 1998.
Time: 2:00 p.m. to Adjournment.
Place: National Cancer Institute, Executive Plaza North, Room 611A, 6130 Executive Boulevard, MSC 7410, Bethesda, MD 20892–7410, Telephone: 301/496–7978.
Contact Person: Mary Bell, Ph.D., Scientific Review Administrator, National Cancer Institute, NIH, Executive Plaza North, 611A, 6130 Executive Boulevard, MSC 7410 Bethesda, MD 20892–7410, Telephone: 301 496–7978.
Purpose/Agenda: To review, discuss and evaluate grant applications.

This notice is being published less than 15 days prior to the meeting due to the urgent need to meet timing limitations imposed by the review and funding cycle.

The meeting will be closed in accordance with the provisions set forth in secs. 552b(c)(4) and 552b(c)(6), Title 5 U.S.C. Applications and the discussions could reveal confidential trade secrets or commercial property such as patentable material and personal information concerning individuals associated with the applications, the disclosure of which would constitute a clearly unwarranted invasion of personal privacy.

(Catalog of Federal Domestic Assistance Program Numbers; 93.393, Cancer Cause and Prevention Research; 93.394, Cancer Detection and Diagnosis Research; 93.395, Cancer Treatment Research; 93.396, Cancer Biology Research; 93.397, Cancer Centers Support; 93.398, Cancer Research Manpower; 93.399, Cancer Control)

Dated: April 8, 1998.

LaVerne Y. Stringfield,

Committee Management Officer, NIH.

[FR Doc. 98–9987 Filed 4–14–98; 8:45 am]

BILLING CODE 4140–01–M

DEPARTMENT OF HEALTH AND HUMAN SERVICES

National Institutes of Health

National Eye Institute; Notice of Closed Meeting

Pursuant to Section 10(d) of the Federal Advisory Committee Act, as amended (5 U.S.C. Appendix 2), notice is hereby given of the following National Eye Institute Special Emphasis Panel (SEP) meeting:

Name of SEP: Clinical Research.
Date: May 1, 1998.
Time: 8:30 a.m.
Place: National Eye Institute, Executive Plaza South, Suite 350, 6120 Executive Blvd., Bethesda, MD 20892–7164.
Contact Person: Andrew P. Mariani, Ph.D., Executive Plaza South, Room 350, 6120 Executive Blvd., Bethesda, MD 20892–7164, (301) 496–5561.
Purpose/Agenda: Review of Grant Applications.

The meeting will be closed in accordance with the provisions set forth in secs. 552b(c)(4) and 552b(c)(6), Title 5, U.S.C. Applications and/or proposals and the discussions could reveal confidential trade secrets of commercial property such as patentable material and personal information concerning individuals associated with the applications and/or proposals, the disclosure of which would constitute a clearly unwarranted invasion of personal privacy.

(Catalog of Federal Domestic Assistance Program No. 93.867, Vision Research: National Institutes of Health)

Dated: April 9, 1998.

LaVerne Stringfield,

Committee Management Officer, NIH.

[FR Doc. 98–9981 Filed 4–14–98; 8:45 am]

BILLING CODE 4140–01–M

DEPARTMENT OF HEALTH AND HUMAN SERVICES

National Institutes of Health

National Institute of Neurological Disorders and Stroke Division of Extramural Activities; Notice of Closed Meetings

Pursuant to Section 10(d) of the Federal Advisory Committee Act, as amended (5 U.S.C. Appendix 2), notice is hereby given of the following meetings:

Name of Committee: National Institute of Neurological Disorders and Stroke Special Emphasis Panel (Telephone Conference Call).

Date: April 30, 1998.

Time: 1:00 p.m.

Place: National Institutes of Health, 7550 Wisconsin Avenue, Room 9C10, Bethesda, MD 20892.

Contact Person: Dr. Paul Sheehy, Mr. Phillip Wiethorn, Scientific Review Administrators, Scientific Review Branch, NINDS, National Institutes of Health, 7550 Wisconsin Avenue, Room 9C10, Bethesda, MD 20892, (301) 496–9223.

Purpose/Agenda: To review and evaluate RFP Contract Proposal(s).

This notice is being published less than 15 days prior to the meeting due to the urgent need to meet timing limitations imposed by the review and funding cycle.

Name of Committee: National Institute of Neurological Disorders and Stroke Special Emphasis Panel (Telephone Conference Call).

Date: May 18, 1998.

Time: 3:30 p.m.

Place: National Institutes of Health, 7550 Wisconsin Avenue, Room 9C10, Bethesda, MD 20892.

Contact Person: Dr. Katherine Woodbury, Scientific Review Administrator, Scientific Review Branch, NINDS, National Institutes of Health, 7550 Wisconsin Avenue, Room 9C10, Bethesda, MD 20892, (301) 496–9223.

Purpose/Agenda: To evaluate one grant application.

The meetings will be closed in accordance with the provisions set forth in secs. 552b(c)(4) and 552b(c)(6), Title 5, U.S.C. Applications and/or proposals and the discussions could reveal confidential trade secrets or commercial property such as patentable material and personal information concerning individuals associated with the applications and/or proposals, the disclosure of which would constitute a clearly unwarranted invasion of personal privacy.

(Catalog of Federal Domestic Assistance Program No. 93.853, Clinical Research Related to Neurological Disorders; No. 93.854, Biological Basis Research in the Neurosciences)

Dated: April 9, 1998.

LaVerne Y. Stringfield,

Committee Management Officer, NIH.

[FR Doc. 98–9982 Filed 4–14–98; 8:45 am]

BILLING CODE 4140–01–M

DEPARTMENT OF HEALTH AND HUMAN SERVICES

National Institutes of Health

National Institute on Aging; Notice of Closed Meetings

Pursuant to Section 10(d) of the Federal Advisory Committee Act, as amended (5 U.S.C. Appendix 2), notice is hereby given of the following meetings:

Name of SEP: National Institute on Aging Special Emphasis Panel, Multicenter Vitamin E Trial in Persons with Down Syndrome.

Date of Meeting: May 7, 1998.

Time of Meeting: 1:00 p.m. to adjournment.

Place of Meeting: Staten Island Hotel, Staten Island, New York 10314.

Purpose/Agenda: To review a research project (RO1).

Contact Person: Dr. Louise Hsu, Scientific Review Administrator, Gateway Building, Room 2C212, National Institutes of Health, Bethesda, Maryland 20892–9205, (301) 496–9666.

Name of SEP: National Institute on Aging Special Emphasis Panel, Networks to Enhance Minority Recruitment to Aging Research.

Date of Meeting: May 27, 1998.

Time of Meeting: 8:00 a.m. to 6:00 p.m.

Place of Meeting: Gateway Building, Conference Room 2C230, 7201 Wisconsin Avenue, Bethesda, Maryland.

Purpose/Agenda: To review R25 type grant applications.

Contact Person: Dr. Arthur Schaerdel, Scientific Review Administrator, Gateway Building, Room 2C212, National Institutes of Health, Bethesda, Maryland 20892–9205, (301) 496–9666.

Name of SEP: National Institute on Aging Special Emphasis Panel, Dietary Restriction and Aging in Rhesus Monkeys.

Date of Meeting: May 28–29, 1998.

Times of Meeting: May 28—8:00 p.m. to recess, May 29—8:00 a.m. to adjournment.

Place of Meeting: Holiday Inn Bethesda, 8120 Wisconsin Avenue, Bethesda, Maryland 20814.

Purpose/Agenda: To review a proposed grant.

Contact Person: Dr. William Kachadorian, Scientific Review Administrator, Gateway Building, Room 2C212, National Institutes of Health, Bethesda, Maryland 20892–9205, (301) 496–9666.

These meetings will be closed in accordance with the provisions set forth in sections 552b(c)(4) and 552b(c)(6), Title 5, U.S.C. Applicants and/or proposals and the discussions could reveal confidential trade secrets or commercial property such as patentable material and personal information concerning individuals associated with the applications and/or proposals, the disclosure of which would constitute a clearly unwarranted invasion of personal privacy.

(Catalog of Federal Domestic Assistance Program No. 93.866, Aging Research, National Institutes of Health)

Dated: April 8, 1998.

LaVerne Y. Stringfield,

Committee Management Officer, NIH.

[FR Doc. 98–9989 Filed 4–14–98; 8:45 am]

BILLING CODE 4140–01–M

DEPARTMENT OF HEALTH AND HUMAN SERVICES

National Institutes of Health

National Institute on Drug Abuse; Notice of Closed Meeting

Pursuant to Section 10(d) of the Federal Advisory Committee Act, as amended (5 U.S.C. Appendix 2), notice is hereby given of the following National Institute on Drug Abuse (NIDA) Special Emphasis Panel meeting.

Purpose/Agenda: To review and evaluate grant applications.

Name of Committee: NIDA Special Emphasis Panel (Conference Grants).

Date: April 14, 1998.

Time: 9:00 a.m.

Place: NIDA Conference Room, Parklawn Building, Rm. 10–05, 5600 Fishers Lane, Rockville, MD 20857.

Contact Person: William Grace, Scientific Review Administrator, Office of Extramural Program Review, National Institute on Drug Abuse, 5600 Fishers Lane, Room 10–42, Telephone (301) 443–2755.

This notice is being published less than 15 days prior to the meeting due to the urgent need to meet timing limitations imposed by the review and funding cycle.

The meeting will be closed in accordance with provisions set forth in secs. 552b(c)(4) and 552b(c)(6), Title 5, U.S.C. The applications and/or proposals and the discussions could reveal confidential trade secrets or commercial property such as patentable material and personal information concerning individuals associated with the applications and/or proposals, disclosure of which would constitute a clearly unwarranted invasion of personal privacy.

(Catalog of Federal Domestic Assistance Program Numbers: 93.277, Drug Abuse Research Scientist Development and Research Scientist Awards; 93.278, Drug Abuse National Research Service Awards for Research Training; 93.279, Drug Abuse Research Programs)

Dated: April 8, 1998.

LaVerne Y. Stringfield,

Committee Management Officer, NIH.

[FR Doc. 98–9990 Filed 4–14–98; 8:45 am]

BILLING CODE 4140–01–M]

DEPARTMENT OF HEALTH AND HUMAN SERVICES

National Institutes of Health

National Institute of Mental Health; Notice of Closed Meeting

Pursuant to Section 10(d) of the Federal Advisory Committee Act, as amended (5 U.S.C. Appendix 2), notice is hereby given of the following meeting of the National Institute of Mental Health Special Emphasis Panel:

Agenda Purpose: To review and evaluate grant applications.

Committee Name: National Institute of Mental Health Special Emphasis Panel.

Date: April 15, 1998.

Time: 10 a.m.

Place: Parklawn, Room 9C–18, 5600 Fishers Lane, Rockville, MD 20857.

Contact Person: Gloria B. Levin, Parklawn, Room 9C–18, 5600 Fishers Lane, Rockville, MD 20857, Telephone: 301–443–1340.

The meeting will be closed in accordance with the provisions set forth in secs. 552b(c)(4) and 552b(c)(6), Title 5 U.S.C. Applications and/or proposals and the discussions could reveal confidential trade secrets or commercial property such as patentable material and personal information concerning individuals associated with the applications and/or proposals, the disclosure of which would constitute a clearly unwarranted invasion of personal privacy.

This notice is being published less than fifteen days prior to the meeting due to the urgent need to meet timing limitations imposed by the review and funding cycle.

(Catalog of Federal Domestic Assistance Program Numbers 93.242, 93.281, 93.282)

Dated: April 8, 1998.

LaVerne Y. Stringfield,

Committee Management Officer, NIH.

[FR Doc. 98–9988 Filed 4–14–98; 8:45 am]

BILLING CODE 4140–01–M

DEPARTMENT OF HEALTH AND HUMAN SERVICES

Public Health Service

National Toxicology Program; Call for Public Comments; Agents, Substances, Mixtures and Exposure Circumstances Proposed for Listing in or Removing From the Report on Carcinogens, Ninth Edition

The National Toxicology Program (NTP) announces its intent to re-review 2,3,7,8-Tetrachlorodibenzo-p-dioxin (TCDD) (CAS #1746–01–6) for possible listing in the Report on Carcinogens, Ninth Edition as Known To Be A Human Carcinogen.

Background

This Report is a Congressionally-mandated listing of Known Human Carcinogens and Reasonably Anticipated Human Carcinogens and its preparation is delegated to the National Toxicology Program by the Secretary, Department of Health and Human Services (HHS). Section 301(b)(4) of the Public Health Service Act, as amended, provides that the Secretary, (HHS), shall publish a report which contains a list of all substances (1) which either are known to be human carcinogens or may reasonably be anticipated to be human carcinogens; and (2) to which a significant number of persons residing in the United States (US) are exposed. The law also states that the reports should provide available information on the nature of exposures, the estimated number of persons exposed and the extent to which the implementation of Federal regulations decreases the risk to public health from exposure to these chemicals.

2,3,7,8-Tetrachlorodibenzo-p-dioxin (TCDD) was reviewed in public session by the NTP Board of Scientific Counselors Subcommittee for the Report on Carcinogens on October 30 & 31, 1997. This review resulted in the Subcommittee's recommendation to upgrade the TCDD listing from Reasonably Anticipated to Be A Human Carcinogen to Known To Be A Human Carcinogen.

NTP Announces a Re-review of 2,3,7,8-tetrachlorodibenzo-p-dioxin and Requests Public Comments

Following his review of the proceedings of that meeting, the NTP Director has determined that the October 30 & 31 public review of TCDD may not have been adequate and has directed that the nomination of TCDD for upgrading to a Known to be Human Carcinogen in the Report on Carcinogens be formally reviewed again by the NTP Board of Scientific Counselors Subcommittee for the Report on Carcinogens in December 1998. The TCDD background document provided to the NTP Board Subcommittee and the public comments and the summary minutes of the October 30 & 31, 1997, review by the NTP Board Subcommittee are available upon request. The NTP wants to insure that all relevant information for TCDD pertaining to its epidemiology and the mechanism of tumor formation in humans and laboratory animals is adequately considered and solicits additional relevant information in support of or against the nomination to list TCDD as a Known to be Human Carcinogen in the Report on Carcinogens, Ninth Edition. In light of the decision to re-review TCDD, the deadline for public comments on dioxin will be extended until June 15, 1998 (see **Federal Register**: March 19, 1998, Volume 63, Number 53, Page 13418). All comments received will be considered in the preparation of any additional information to supplement the original background document. Any new or supplementary information to be provided to the NTP Board Subcommittee members will be available to the public approximately one month prior to the December peer review meeting.

Requests for the background information described, comments, or questions should be directed to Dr. C. W. Jameson, National Toxicology Program, Report on Carcinogens, 79 Alexander Drive, Building 4401, P.O. Box 12233, Research Triangle Park, NC 27709; phone: (919) 541–4096, fax: (919) 541–2242, email: jameson@niehs.nih.gov.

Dated: April 8, 1998.

Kenneth Olden,

Director, National Toxicology Program.

[FR Doc. 98–9991 Filed 4–14–98; 8:45 am]

BILLING CODE 4140–01–M

DEPARTMENT OF HEALTH AND HUMAN SERVICES

Substance Abuse and Mental Health Services Administration

Agency Information Collection Activities: Proposed Collection; Comment Request

In compliance with Section 3506(c)(2)(A) of the Paperwork Reduction Act of 1995 concerning opportunity for public comment on proposed collections of information, the Substance Abuse and Mental Health Services Administration will publish periodic summaries of proposed projects. To request more information on the proposed projects or to obtain a copy of the information collection plans, call the SAMHSA Reports Clearance Officer on (301) 443–7978.

Proposed Project

COOPERATIVE AGREEMENT FOR MENTAL HEALTH CARE PROVIDER EDUCATION IN HIV/AIDS PROGRAM II—New—The Substance Abuse and Mental Health Services Administration's (SAMHSA) Center for Mental Health Services (CMHS) intends to conduct a multi-site evaluation of its Cooperative Agreement for Mental Health Care Provider Education in HIV/AIDS Program II. The education programs to be funded under this cooperative agreement are designed to disseminate knowledge of the psychological and neuropsychiatric sequelae of HIV/AIDS to both traditional (e.g., psychiatrists, psychologists, nurses, primary care physicians, medical students, and social workers) and non-traditional (e.g., clergy, and alternative health care workers) first-line providers of mental health services. The multi-site evaluation is designed to assess the effectiveness of particular training curricula, document the integrity of training delivery formats, and assess the effectiveness of the various training delivery formats.

Analyses will assist CMHS in documenting the numbers and types of traditional and non-traditional mental health providers accessing training; the content, nature and types of training participants receive; and the extent to which trainees experience knowledge, skill and attitude gains/changes as a result of training attendance. The multi-

site evaluation design uses a two-tiered data collection and analytic strategy to collect information on (1) the organization and delivery of training, and (2) the impact of training on participants' knowledge, skills and abilities. Information about the organization and delivery of training will be collected from trainers and staff who are funded by these cooperative agreements hence there is no respondent burden. All training participants will be asked to complete a brief (5 minute) satisfaction questionnaire. Trainees attending sessions longer than 3 hours long will be asked to complete 10-minute pre-post-test evaluation questionnaires. Trainees attending sessions longer than 8 hours and a sample of their supervisors will also be asked to complete 5-minute follow-up evaluation instruments. CMHS intends to fund between 6 to 8 education sites under the Cooperative Agreement for Mental Health Care Provider Education in HIV/AIDS Program II. Each site will serve an estimated 3000 to 3300 trainees over 3 years. The average time requirement for participants across all sessions is expected to be 12 minutes. A pre-test of the evaluation instruments and design will be completed in 4 sites with no more than 9 respondents. Modifications to the evaluation design and instruments will be made as based on results from the feasibility study.

	Number of respondents	Average responses per respondent	Average time per respondent (minutes)	Total time burden (hours)	Annual burden (hours)
Trainees	26,400	1.5	12	7,920	2,640
Supervisors	2,640	1	5	220	73
Total	29,040			8,140	2,713

* Based on 8 sites funded for 3 years serving a maximum of 1,100 trainees per year. Number of respondents is estimated based on sites conducting 60% of sessions being 3 hours or less, 30 percent of sessions between 3 and 8 hours long and 10 percent of sessions greater than 8 hours long.

Comments are invited on: (a) whether the proposed collections of information are necessary for the proper performance of the functions of the agency, including whether the information shall have practical utility; (b) the accuracy of the agency's estimate of the burden of the proposed collection of information; (c) ways to enhance the quality, utility, and clarity of the information to be collected; and (d) ways to minimize the burden of the collection of information on respondents, including through the use of automated collection techniques or other forms of information technology.

Send comments to Nancy Pearce, SAMHSA Reports Clearance Officer, Room 16–105, Parklawn Building, 5600 Fishers Lane, Rockville, MD 20857. Written comments should be received within 60 days of this notice.

Dated: April 9, 1998.

Richard Kopanda,

Executive Officer, SAMHSA.

[FR Doc. 98–9920 Filed 4–14–98; 8:45 am]

BILLING CODE 4162–20–P

DEPARTMENT OF HOUSING AND URBAN DEVELOPMENT

[Docket No. FR–4349–N–12]

Submission for OMB REVIEW: COMMENT REQUEST

AGENCY: Office of the Assistant Secretary for Administration, HUD.

ACTION: Notice.

SUMMARY: The proposed information collection requirement described below has been submitted to the Office of Management and Budget (OMB) for review, as required by the Paperwork Reduction Act. The Department is soliciting public comments on the subject proposal.

DATES: *Comments due date:* May 15, 1998.

ADDRESSES: Interested persons are invited to submit comments regarding this proposal. Comments must be received within thirty (30) days from the date of this Notice. Comments should refer to the proposal by name and/or OMB approval number and should be sent to: Joseph F. Lackey, Jr., OMB Desk Officer, Office of Management and Budget, Room 10235, New Executive Office Building, Washington, DC 20503.

FOR FURTHER INFORMATION CONTACT: Wayne Eddins, Reports Management Officer, Department of Housing and Urban Development, 451 7th Street, Southwest, Washington, DC 20410, telephone (202) 708–1305. This is not a toll-free number. Copies of the proposed forms and other available documents submitted to OMB may be obtained from Mr. Eddins.

SUPPLEMENTARY INFORMATION: The Department has submitted the proposal for the collection of information, as described below, to OMB for review, as required by the Paperwork Reduction Act (44 U.S.C. Chapter 35).

The Notice lists the following information: (1) The title of the information collection proposal; (2) the office of the agency to collect the information; (3) the OMB approval number, if applicable; (4) the description of the need for the information and its proposed use; (5) the agency form number, if applicable; (6) what members of the public will be affected by the proposal; (7) how frequently information submissions will be required; (8) an estimate of the total number of hours needed to prepare the information submission including number of respondents, frequency of response, and hours of response; (9) whether the proposal is new, an extension, reinstatement, or revision of an information collection requirement; and (10) the names and telephone numbers of an agency official familiar with the proposal and of the OMB Desk Officer for the Department.

Authority: Section 3507 of the Paperwork Reduction Act of 1995, 44 U.S.C. 35, as amended.

Dated: April 8, 1998.

David S. Cristy,

Director, IRM Policy and Management Division.

Notice of Submission of Proposed Information Collection to OMB

Title of Proposal: Technical Assistance for Community Planning and Development Programs.

Office: Community Planning and Development.

OMB Approval Number: 2506–xxxx.

Description of the Need for the Information and Its Proposed Use: To conduct competitions to select technical assistance providers to supply expertise to CPD grantees to shape their CPD and other available resources into effective,

coordinated, neighborhood and community development strategies to revitalize and physically, socially and economically strengthen their communities.

Form Number: SF–424, 424B, 269A & LLL; HUD 2880 and 50070.

Respondents: Not-For-Profit Institutions, State, and Local or Tribal Government, and Business or Other For-Profit.

Frequency of Submission: Quarterly and Recordkeeping.

Reporting Burden:

	Number of respondents	x	Frequency of response	x	Hours per response	=	Burden hours
Application	280		1		60		16,800
Workplan Development	475		1		20		9,500
Quarterly Reports (Include Final Report)	475		4		6		11,400
Recordkeeping	475		12		2		11,400

Total Estimated Burden Hours: 49,100.

Status: New Collection.

Contact: Penny McCormack, HUD, (202) 708–3176; Joseph F. Lackey, Jr., OMB, (202) 395–7316.

Dated: April 8, 1998.

[FR Doc. 98–9906 Filed 4–14–98; 8:45 am]

BILLING CODE 4210–01–M

DEPARTMENT OF HOUSING AND URBAN DEVELOPMENT

[Docket No. FR–4281–N–03]

Notice of Designation of Empowerment Zones

AGENCY: Office of the Assistant Secretary for Community Planning and Development, HUD.

ACTION: Notice.

SUMMARY: This notice publishes the names of the two additional Empowerment Zones designated by HUD in accordance with authority granted in the Taxpayer Relief Act of 1997, under the existing selection criteria.

DATES: *Announcement date:* January 31, 1998.

Effective date: January 1, 2000.

FOR FURTHER INFORMATION CONTACT: Dennis Kane, Coordinator, EZ/EC Initiative, Department of Housing and Urban Development, Room 7130, 451 Seventh Street, SW, Washington, DC 20410, telephone (202) 7708–6339. (This telephone number is not toll-free.) For hearing- and speech-impaired persons, this telephone number may be accessed by TTY (text telephone) by calling the Federal Information Relay Service at 1 (800) 877–8339 (toll-free).

SUPPLEMENTARY INFORMATION: Section 951 of the Taxpayer Relief Act of 1997 (Pub. L. No. 105–34, 111 Stat. 788, enacted on August 5, 1997) (the 1997 Act) amended section 1391 of the Internal Revenue Code (26 U.S.C. 1391) to authorize HUD to designate two additional Empowerment Zones (EZs), based on existing criteria. The 1997 Act prescribed that the authority to make these designations was effective on the date of enactment; that the designations were to be made by February 1, 1998; and that the designations could not take effect before January 1, 2000.

On January 7, 1998, the Secretary of HUD delegated his authority to designate two additional urban Empowerment Zones, in accordance with the amendment made by the 1997 Act, to the Assistant Secretary for Community Planning and Development. Notice was given to the public of this delegation of authority by publication in the **Federal Register** on January 26, 1998 (63 FR 3761).

The Assistant Secretary for Community Planning and Development, Saul N. Ramirez, Jr., gave notice of his designations in an internal Departmental memorandum on January 30, 1998, and a public announcement of the designations was made by Vice President Al Gore on January 31, 1998.

In accordance with 24 CFR 597.300(e), notice is hereby given that the two Empowerment Zones designated are located in Cleveland, Ohio and Los Angeles, California. These designations will be effective on January 1, 2000.

Catalog of Federal Domestic Assistance

The Catalog of Federal Domestic Assistance Program number assigned to this program is 14.244.

Authority: 26 U.S.C. 1391(b)(2).

Dated: April 6, 1998.

Saul N. Ramirez, Jr.,

Assistant Secretary for Community Planning and Development.

[FR Doc. 98–10014 Filed 4–14–98; 8:45 am]

BILLING CODE 4210–29–P

DEPARTMENT OF HOUSING AND URBAN DEVELOPMENT

[Docket No. FR–4351–N–03]

Announcement of OMB Approval Number

AGENCY: Office of Policy Development and Research, HUD.

ACTION: Announcement of the Office of Management and Budget (OMB) approval number.

SUMMARY: The purpose of this document is to announce the OMB approval number for the collection and analysis of data on the Survey of Community Development Work Study Program Participants.

FOR FURTHER INFORMATION CONTACT: Karna Wong, Office of Policy Development and Research, Room 8140, Washington, DC 20410—telephone (202) 708–0574. A telecommunications device for the hearing impaired (TTY) is available at (202) 708–3259 (these are not toll-free numbers).

SUPPLEMENTARY INFORMATION: On September 18, 1997 (62 FR 49022), the Department published in the **Federal Register**, a notice of proposed data collection on the Survey of Community Development Work Study Program Participants. The document titled, ''Notice of Proposed Information Collection for Public Comment''—indicated that information collection requirements contained in the notice had been submitted to the Office of Management and Budget for review and approval under section 3506 of the Paperwork Reduction Act of 1995 (44 U.S.C., chapter 35 as amended). The notice also listed the title of the proposal, and description of the need for the information and proposed use.

This present document provides notice of the OMB approval number. Accordingly, the control number approved by the Office of Management and Budget in accordance with the Paperwork Reduction Act of 1995 (44 U.S.C. Chapter 35, as amended) for the Survey of Community Work Study

Program Participants is 2528–0192. This approval number expires on March 31, 2001. An agency may not conduct or sponsor, and a person is not required to respond to, a collection of information unless the collection displays a valid control number.

Dated: April 8, 1998.

Paul A. Leonard,

Deputy Assistant Secretary for the Office of Policy Development.

[FR Doc. 98–10015 Filed 4–14–98; 8:45 am]

BILLING CODE 4210–62–M

DEPARTMENT OF THE INTERIOR

Fish and Wildlife Service

Availability of an Environmental Assessment/Habitat Conservation Plan and Receipt of Application for an Incidental Take Permit

ACTION: Notice of Availability of an Environmental Assessment/Habitat Conservation Plan and Receipt of Application for Incidental Take Permit for Construction and Operation of a residential and commercial development on approximately 219 acres of the 498-acre Vista Royale Property, Lakeway, Travis County, Texas.

SUMMARY: Lakeway Vista Royale, Ltd. (applicant) has applied to the Fish and Wildlife Service (Service) for an incidental take permit pursuant to Section 10(a) of the Endangered Species Act (Act). The applicant has been assigned permit number PRT–812695. The requested permit, which is for a period of 30 years, would authorize the incidental take of the endangered golden-cheeked warbler (*Dendroica chrysoparia*). The proposed take would occur as result of the construction and operation of a residential and commercial development on approximately 219 acres of the 498-acre Vista Royale Property located in Austin, Travis County, Texas.

The Service has prepared the Environmental Assessment/Habitat Conservation Plan (EA/HCP) for the incidental take applications. A determination of jeopardy to the species or a Finding of No Significant Impact (FONSI) will not be made until, at a minimum, 30 days from the date of publication of this notice. This notice is provided pursuant to Section 10(a) of the Act and National Environmental Policy Act regulations (40 CFR 1506.6).

DATES: Written comments on the application should be received on or before May 15, 1998.

ADDRESSES: Persons wishing to review the application may obtain a copy by writing to the Assistant Regional Director, Ecological Services, U.S. Fish and Wildlife Service, P.O. Box 1306, Albuquerque, New Mexico 87103.

Documents will be available for public inspection by appointment only during normal business hours (8:00 to 4:30). Written data or comments concerning the application(s) and EA/HCPs should be submitted to the Supervisor, Ecological Field Office, U.S. Fish and Wildlife Service, 10711 Burnet Rd., Austin, Texas 78758. Please refer to permit number PRT–812695 when submitting comments.

FOR FURTHER INFORMATION CONTACT: Sybil Vosler at the above Austin Ecological Service Field Office.

SUPPLEMENTARY INFORMATION: Section 9 of the Act prohibits the ''taking'' of endangered species such as the golden-cheeked warbler. However, the Service, under limited circumstances, may issue permits to take endangered wildlife species incidental to, and not the purpose of, otherwise lawful activities. Regulations governing permits for endangered species are at 50 CFR 17.22.

Applicant

Lakeway Vista Royale, Ltd. plans to construct a residential and commercial development on the 498-acre tract and will preserve approximately 198 acres of golden-cheeked warbler habitat on site. The construction will be located at the Vista Royale property located southeast and directly adjacent to the City of Lakeway and approximately 2 miles northwest of the Village of Bee Cave and roughly 14 miles west-northwest of the downtown City of Austin. The preserved area will be maintained in its natural state and title or conservation easement granted in perpetuity and will be held by a nonprofit conservation organization or governmental agency approved by the Service.

Alternatives to this action were rejected because selling or not developing the subject property with federally listed species present was not economically feasible.

Renne Lohoefener,

Acting Regional Director, Region 2, Albuquerque, New Mexico.

[FR Doc. 98–9774 Filed 4–14–98; 8:45 am]

BILLING CODE 4510–55–P

DEPARTMENT OF THE INTERIOR

Bureau of Land Management

[ES–030–08–1310–01]

Notice of Availability; Mosquito Creek Lake Draft Planning Analysis Environmental Assessment

AGENCY: Bureau of Land Management, Milwaukee Field Office, Interior.

ACTION: Notice of availability and notice of comment period and public meetings.

SUMMARY: Pursuant to the Federal Land Policy and Management Act of 1976 and National Environmental Policy Act of 1969, as amended, and in cooperation and coordination with the U.S. Army Corps of Engineers (COE) and the Ohio Department of Natural Resources, notice is hereby given that the Bureau of Land Management (BLM), Milwaukee Field Office, has prepared the Mosquito Creek Lake Draft Planning Analysis and Environmental Assessment (PA/EA) for oil and gas leasing. The purpose of the Draft PA/EA is to assess the impacts of leasing and subsequent development of Federal oil and gas reserves under the COE's Mosquito Creek Lake project in Trumbull County, Ohio. Copies are available for public and agency review from the address below. This notice also announces that comments on the Draft PA/EA will be received and public meetings for the purpose of receiving comments on the Draft document will be held. Other meetings may be scheduled at the request of the public and other governmental entities.

DATES: Written comments on the Draft PA/EA must be postmarked no later than June 14, 1998. Oral and/or written comments may be presented at two scheduled public meetings. The first will be held on May 11, 1998, in the Warren City Council Chambers, Municipal Justice Building, 141 South Street S.E., Warren, Ohio. The second will be held on May 12, 1998, at Cortland Elementary School, 264 Park Avenue in Cortland, Ohio. Both meetings will be held from 7 p.m. to 9 p.m. with registration beginning at 6:30 p.m. The comment period for the Draft PA/EA commences with the publication of this notice.

ADDRESSES: Written comments should be addressed to the Field Manager, Bureau of Land Management, Milwaukee Field Office, PO Box 631, Milwaukee, Wisconsin 53201–0631.

FOR FURTHER INFORMATION CONTACT: Terry Saarela, Team Leader, at (414) 297–4437, or Chris Hanson, Assistant Field Manager, Division of Natural Resource Management at (414) 297–4421.

SUPPLEMENTARY INFORMATION: The Draft PA/EA analyzed two alternatives: (1) No action/no lease; and (2) lease under a no surface occupancy stipulation. Analysis focused on addressing several issues, including impacts to water quality (municipal and private drinking water supplies and fishing opportunities), aesthetics, wetlands, threatened and endangered species, recreation, cultural/historic/Native American resources, public health and safety, and liability. Comments on the Draft PA/EA will be used to formulate the proposed PA/EA. After the release of the proposed plan, any person who participated in the planning process and has an interest which is or may be adversely affected by the approval of the plan may file a protest with the Director of the BLM. After resolution of any protests, BLM will release a Final PA/EA, which will be the basis of BLM/COE decisions for the management of Federal mineral resources in the planning area.

Dated: April 8, 1998.

James W. Dryden,

Field Manager.

[FR Doc. 98–9878 Filed 4–14–98; 8:45 am]

BILLING CODE 4310–GJ–P

DEPARTMENT OF THE INTERIOR

Bureau of Land Management

[WY–040–1430–00; WYW–45359]

Recreation and Public Purposes Classification and Application to Amend Lease in Lincoln County; Wyoming

AGENCY: Bureau of Land Management, Interior.

ACTION: Notice of Realty Action, Recreation and Public Purposes Classification and Application to Amend Lease in Lincoln County.

SUMMARY: The following public lands have been examined and found suitable for classification for lease or conveyance to Lincoln County under the provisions of the Recreation and Public Purposes Act, as amended (43 U.S.C. 869 et. seq.). Lincoln County has applied to amend their existing lease for a ski area. The lease will be expanded from 372 acres to approximately 633 acres.

Sixth Principal Meridian, Lincoln County, Wyoming

T. 24 N., R. 118 W.,
Sec. 4, W½ lot 6, lots 7, 8, 9, 10, W½ lot 11, SE¼ lot 11, lots 14, 15, 16, N½ lot 17, lot 18, W½ lot 19, NE¼ lot 19;
Sec. 5, E½E½ lot 5, E½ lot 12, SW¼ lot 12; lot 13; NE¼ lot 20.
T. 25 N., R. 118 W.,
Sec. 35, portions of S½S½.

The areas described aggregate 633 acres.

FOR FURTHER INFORMATION CONTACT: Mark Hatchel, Realty Specialist, Kemmerer Resource Area, Bureau of Land Management, 312 Highway 189 North, Kemmerer, Wyoming 83101, (307) 877–3933 extension 107.

SUPPLEMENTARY INFORMATION: The Lincoln County Recreation Commission has applied to amend their existing ski area lease to include an additional 261 acres that will contain portions of four new and four expanded ski runs. The application also contains an area for avalanche control. A longer ski lift will be constructed to reach the new ski runs. The ski area has been under lease since 1963. The latest lease will expire in the year 2000. The Commission has also requested that the lands be classified as suitable for conveyance in addition to leasing. This action is in conformance with the Kemmerer Resource Management Plan.

Upon publication of this notice in the **Federal Register**, the lands will be segregated from all other forms of appropriation under the public land laws, including the general mining laws, except for lease or conveyance under the Recreation and Public Purposes Act and leasing under the mineral leasing laws. For a period of 45 days from the date of publication of this notice in the **Federal Register**, interested persons may submit comments regarding the proposed amended lease/conveyance or classification of the lands to Jeff Rawson, Kemmerer Resource Area Manager, 312 Highway 189 North, Kemmerer, WY 83101.

Classification Comments: Interested parties may submit comments involving the suitability of the land for a ski area. Comments on the classification are restricted to whether the land is physically suited for the proposal, whether the use will maximize the future use or uses of the land, whether the use is consistent with local planning and zoning, or if the use is consistent with State and Federal programs.

Application Comments: Interested parties may submit comments regarding the specific use proposed in the application and plan of development, whether the BLM followed proper administrative procedures in reaching the decision, or any other factor not directly related to the suitability of the land for a ski area.

Any adverse comments will be reviewed by the State Director. In the absence of any adverse comments, the classification will become effective June 15, 1998.

Dated: April 2, 1998.

Jeff Rawson,

Area Manager.

[FR Doc. 98–9794 Filed 4–14–98; 8:45 am]

BILLING CODE 4310–22–P

DEPARTMENT OF THE INTERIOR

Minerals Management Service

Agency Information Collection Activities: Proposed Collection; Comment Request

AGENCY: Minerals Management Service (MMS), Interior.

ACTION: Notice of a new information collection.

SUMMARY: As part of its continuing effort to reduce paperwork and respondent burden, MMS invites the public and other Federal agencies to comment on a proposal to request approval of the new collection of information discussed below. The Paperwork Reduction Act of 1995 (PRA) provides that an agency may not conduct or sponsor, and a person is not required to respond to, a collection of information unless it displays a currently valid Office of Management and Budget (OMB) control number.

DATES: Submit written comments by June 15, 1998.

ADDRESSES: Direct all written comments to the Rules Processing Team, Minerals Management Service, Mail Stop 4024, 381 Elden Street, Herndon, Virginia 20170–4817.

FOR FURTHER INFORMATION CONTACT: Alexis London, Rules Processing Team, telephone (703) 787–1600. You may contact Alexis London to obtain a copy of the proposed collection of information at no cost.

SUPPLEMENTARY INFORMATION:

Title: Survey—Testing and Calibrating the Measurement of Nonmarket Values for Natural Resources via the Contingent Valuation Methods.

Abstract: The Outer Continental Shelf (OCS) Lands Act, as amended, directs the Secretary of the Interior to prepare a ''5-Year Program'' that specifies the schedule of offshore natural gas and oil lease sales for the 5-year period covered by the document. The MMS prepares the 5-Year Program for the Secretary. The key analytical support for the Secretary's decision is a cost-benefit analysis of all size, timing, and location alternatives for all lease sales being considered. The MMS's 5-year cost-benefit analysis is an almost complete accounting of all the costs and benefits attributable to the offshore natural gas and oil leasing and development process. However, the cost-benefit

analysis has one major exclusion. MMS does not account fully for the existence values (also called passive enjoyment values) of resources that might be damaged or lost through offshore activities. Existence values include the values people might place on a resource just by knowing it exists, or by having the option of using it at some future date, or by being able to bequeath it to future generations.

The only way currently available to measure existence values is through the use of the contingent valuation method (CVA). CVA consists of carefully constructed questionnaires which are used in interviews that elicit from people their estimate of what they would be willing to pay to avoid the loss or damage. The MMS has two major reasons why it has not funded CVA studies to provide estimates of existence values to complete its cost-benefit analysis: First, the methodology for CVA studies is still somewhat controversial in the economics profession. Second, CVA studies for a program covering as vast an array of environmental resources across the entire outer continental shelf would be prohibitively expensive.

The work proposed here is part of a research plan designed to come to grips with both of these problems. This project focuses on improving the methodology of CVA and its acceptance by the economics profession. A follow-on project would build on the results of this project to test a less expensive way of gathering estimates of peoples' willingness to pay for environmental resource protection. This new approach is expected to cut the cost of CVA studies to one-third the present cost. With these improvements, MMS should be able to complete its 5-year cost-benefit analysis using methodology acceptable to a majority of the economics profession.

Frequency: This is a one-time voluntary survey.

Estimated number and description of respondents and reporting and recordkeeping ''hour'' burden: Approximately 1,200 American adults will be asked four questions, averaging about 4 minutes per respondent.

Estimated reporting and recordkeeping ''cost'' burden: The PRA requires agencies to estimate the total annual cost burden to respondents as a direct result of this collection of information. This is a one-time survey. There are no questions asked which would require review of such detailed records as capital or operating expenditures of businesses or individuals. There is no cost burden on the respondents associated with this collection of information.

Comments: The MMS will summarize written responses to this notice and address them in its submission for OMB approval. All comments will become a matter of public record. In calculating the burden, MMS has assumed that information requested from respondents will not require the reviewing of detailed records. Questions have been designed to elicit information which would reasonably be recalled by respondents or quickly estimated. The MMS specifically solicits comments on the following questions:

(a) Is the proposed collection of information necessary for the proper performance of MMS's functions, and will it be useful?

(b) Are the estimates of the burden hours of the proposed collection reasonable?

(c) Do you have any suggestions that would enhance the quality, clarity, or usefulness of the information to be collected?

(d) Is there a way to minimize the information collection burden on those who are to respond, including through the use of appropriate automated electronic, mechanical, or other forms of information technology?

MMS Information Collection Clearance Officer: Jo Ann Lauterbach, (202) 208–7744.

Dated: April 7, 1998.

John Mirabella,

Acting Chief, Engineering and Operations Division.

[FR Doc. 98–9969 Filed 4–14–98; 8:45 am]

BILLING CODE 4310–MR–P

DEPARTMENT OF THE INTERIOR

National Park Service

Notice of Meeting of National Landmarks Committee of National Park System Advisory Board

SUMMARY: Notice is hereby given in accordance with the Federal Advisory Commission Act that a meeting of the National Landmarks Committee of the Secretary of the Interior's National Park System Advisory Board will be held at 9:00 a.m. on the following date and at the following location.

DATE: May 11, 1998.

LOCATION: Main Hearing Room, First Floor, 800 North Capitol Street, NW, Washington, DC.

FOR FURTHER INFORMATION CONTACT: Patricia Henry, National Register, History, and Education (2280), National Park Service, 1849 C Street, NW, Washington, DC 20013–7127. Telephone (202) 343–8163.

SUPPLEMENTARY INFORMATION: The purpose of the meeting of the National Landmarks Committee of the Secretary of the Interior's National Park System Advisory Board is to evaluate studies of historic properties in order to advise the full National Park System Advisory Board meeting on May 21, 1998, of the qualifications of properties being proposed for National Historic Landmark (NHL) designation, and to recommend to the full board those properties that the committee finds meet the criteria for designation for the National Historic Landmarks Program. The members of the National Landmarks Committee are: Dr. Holly Anglin Robinson, co-chair; Mr. Parker Westbrook, co-chair; Mr. Peter Dangermond; Dr. Shereen Lerner; Mr. Jerry L. Rogers; Dr. John Vlach; Dr. Richard Guy Wilson; and Dr. James Horton, ex officio.

The meeting will include presentations and discussions on the national historic significance and the historic integrity of a number of properties being nominated for National Historic Landmark designation. The meeting will be open to the public. However, facilities and space for accommodating members of the public are limited. Any member of the public may file for consideration by the committee written comments concerning nominations and matters to be discussed pursuant to 36 CFR Part 65. Comments should be submitted to Carol D. Shull, Chief, National Historic Landmarks Survey, and Keeper of the National Register of Historic Places, National Register, History, and Education (2280), National Park Service, 1849 C Street, NW, Washington, DC 20013–7127.

The nominations to be considered are:

CONNECTICUT

Austin F. Williams Carriagehouse and House, Farmington

FLORIDA

Key West Light Station, Key West
Ponce de Leon Light Station, Ponce Inlet

ILLINOIS

James Charnley House, Chicago
Grosse Point Light Station, Evanston

MASSACHUSETTS

Castle Hill, Ipswich
Fenway Studios, Boston

MICHIGAN

North Manitou Island Lifesaving Station, Leelanau County

NEW MEXICO

Georgia O'Keeffe Home and Studio, Abiquiu

NEW YORK

John Brown Farm and Gravesite, Lake Placid
Radeau *LAND TORTOISE*, Lake George

NORTH CAROLINA

Cape Hatteras Light Station, Buxton

PENNSYLVANIA

Laurel Hill Cemetery, Philadelphia
Merion Friends Meeting House, Merion Station
Woodmont, Gladwyne

TEXAS

Trevino-Uribe Rancho, San Ygnacio

VIRGINIA

Natural Bridge, Rockbridge County
Robert Russa Moton High School, Farmville
Woodlawn, Fairfax County

WISCONSIN

Milton House, Milton

The committee will also consider the following de-designation:

CALIFORNIA

Rock Magnetics Laboratory, Menlo Park

The committee will also consider the following boundary expansions and name changes:

KANSAS

Lower Cimarron Spring (formerly Wagon Bed Springs), Grant County

NEW YORK

Lower Landing Archeological District (boundary expansion of Old Fort Niagara NHL and name change to Colonial Niagara Historic District), Lewiston

The committee will also be given an introduction and overview to:

NEW MEXICO

Camino Real de Los Tejas National Historic Trail

Dated: April 9, 1998.

Beth Savage,

Acting Keeper of the National Register of Historic Places, National Park Service, Washington Office.

[FR Doc. 98–9907 Filed 4–14–98; 8:45 am]

BILLING CODE 4310–70–P

DEPARTMENT OF THE INTERIOR

National Park Service

Native American Graves Protection and Repatriation Review Committee: Meeting

AGENCY: National Park Service, Interior.

ACTION: Notice.

Notice is hereby given in accordance with the Federal Advisory Committee Act (FACA), 5 U.S.C. Appendix (1988), that a meeting of the Native American Graves Protection and Repatriation Review Committee will be held on June 25–27, 1998 in Portland, Oregon.

The Committee will meet in the Colonel Lindberg room at the Downtown Portland Embassy Suites hotel; telephone: 503/279–9000, fax: 503/497–9051, located at 319 SW Pine Street in Portland, Oregon. Meetings will begin each day at 8:30 a.m., and will end at not later than 5:00 p.m. on Thursday and Friday and at 3:00 p.m. on Saturday.

The Native American Graves Protection and Repatriation Review Committee was established by Pub. L. 101–601 to monitor, review, and assist in implementation of the inventory and identification process and repatriation activities required under the Native American Graves Protection and Repatriation Act (NAGPRA).

The agenda for this meeting will include update on Federal agency compliance with the statute, the disposition of culturally unidentifiable human remains, and the status of implementation in the Pacific Northwest region of the United States.

This meeting will be open to the public. However, facilities and space for accommodating members of the public are limited. Persons will be accommodated on a first-come, first-served basis. A small block of rooms has been set aside at the Downtown Portland Embassy Suites hotel, at both a reduced rate and a slightly lower rate for government employees. Reservations must be booked by May 25 to reserve at the blocked rate. Please mention that you will be attending the NAGPRA Review Committee Meeting. Any member of the public may file a written statement concerning matters to be discussed with Dr. Francis P. McManamon, Departmental Consulting Archeologist.

Persons wishing further information concerning this meeting, or who wish to submit written statements may contact Dr. Francis P. McManamon, Departmental Consulting Archeologist, National Park Service, 1849 C Street NW, NC340, Washington, DC 20240; telephone: 202/343–8161. Transcripts of the meeting will be available for public inspection approximately eight weeks after the meeting at the office of the Departmental Consulting Archeologist, 800 North Capitol St., NW, Suite 340, Washington, DC.

Dated: April 2, 1998.

Francis P. McManamon,

Departmental Consulting Archeologist, Manager, Archeology and Ethnography Program.

[FR Doc. 98–9863 Filed 4–14–98; 8:45 am]

BILLING CODE 4310–70–F

DEPARTMENT OF THE INTERIOR

Bureau of Reclamation

Tucson Aqueduct System Reliability Investigation, Central Arizona Project, INT–FES 98–12

AGENCY: Bureau of Reclamation, Interior.

ACTION: Notice of availability on the final environmental impact statement.

SUMMARY: Pursuant to the National Environmental Policy Act of 1969 (as amended) (NEPA), the Bureau of Reclamation (Reclamation) has prepared a final environmental impact statement (FEIS) for the Tucson Aqueduct System Reliability Investigation (TASRI) project, Tucson Division, Central Arizona Project (CAP). The FEIS addresses alternatives that have been studied to incorporate short-term delivery reliability into the CAP system for the Tucson area. This short-term reliability would ensure the delivery of CAP water to Tucson area users during periods of planned maintenance outages of the CAP. Reclamation proposes the construction of a 15,000 acre-foot surface storage reservoir, located southwest of the Tucson metropolitan area, to provide reliability to Tucson area CAP water users.

ADDRESSES: Copies of the FEIS are available for public inspection and review at the following locations:

- Bureau of Reclamation, Regional Liaison Office, Room 7624, 1849 C Street NW, Washington, D.C. 20240; telephone (202) 208–6269
- Bureau of Reclamation, Denver Office Library, Building 67, Room 167, Denver Federal Center, 6th and Kipling, Denver, CO 80225; telephone (303) 236–6963
- Bureau of Reclamation, Lower Colorado Regional Director's Office, Nevada Highway and Park Street, Boulder City, NV 89005; telephone (702) 293–8000
- Bureau of Reclamation, Phoenix Area Office, Attn: PXAO–1500, 2222 W. Dunlap Avenue, Suite 100, Phoenix, AZ 85021–2801; telephone (602) 216–3864

- Bureau of Reclamation, Tucson Field Office, 4257 W. Ina Road, Suite 101, Tucson, AZ 85742; telephone (520) 744–5180

Libraries: Copies of the FEIS are also available for inspection at the following libraries: County Courthouse Law Library, University of Arizona Main Library, City Hall Annex Library, and the City Hall Government Reference Library (9th Floor), in Tucson, AZ; Arizona State University Hayden Library, (Arizona Collection), in Tempe, AZ; and the Phoenix (Burton Barr) Public Library in Phoenix, AZ.

FOR FURTHER INFORMATION CONTACT: Mr. Mike Pryor, TASRI Project Manager, PXAO–2500, or Ms. Sandra Eto, NEPA Compliance Specialist, PXAO–1500, Reclamation, PO Box 81169, Phoenix AZ 85069–1169; telephone (602) 216–3931, or 216–3857, respectively.

SUPPLEMENTARY INFORMATION: The CAP, authorized as part of the Colorado River Basin Project Act of 1968, is a multipurpose water project which develops water for municipal and industrial use, as well as for Indian uses and non-Indian agricultural uses in central and southern Arizona. Because of Tucson's greater exposure to water service interruptions, the TASRI was initiated in 1986 to study alternatives that would provide as ''reasonably reliable'' a supply of CAP water to the Tucson area as is available to Phoenix area cities. The FEIS analyzes the environmental consequences of the construction and operation of a 15,000 acre-foot surface storage reservoir (the Agency proposed action), two additional alternatives, and a no Federal action alternative. The FEIS describes environmental consequences to the following resources: Biological, cultural, geologic, air, water, land, recreational, socio-economic, and Indian trust assets. Construction and operation of a surface storage reservoir would provide opportunities for incorporating recreational facilities. A local sponsor(s) would need to agree to be responsible for at least 50 percent of the capital costs to construct the recreational developments, as well as accept responsibility for recreation-related operating and maintenance costs. Reclamation estimates 214 Pima pineapple cacti would be impacted from the proposed action. The Pima pineapple cactus is a federally endangered plant that occurs on the proposed surface storage reservoir site. Fish and Wildlife Service's Biological Opinion for this project indicates implementation of a Reasonable and Prudent Alternative (RPA) will avoid jeopardizing the continued existence of the Pima pineapple cactus. One of the RPA actions directs Reclamation to establish a refugium for the Pima pineapple cactus that is of similar acreage, cactus population, and of similar or better habitat of the project area, if this proposed action is implemented. Recreational development within the project area is not precluded by the Opinion.

The draft EIS was issued April 18, 1995. Responses to comments received from interested organizations and individuals, both in writing and during two public hearings held in June 1995, are addressed in the FEIS.

Reclamation's development and evaluation of the alternatives described in the FEIS, and selection of the proposed action, were based upon the assumption that the great majority of CAP water allocated to the Tucson metropolitan area would be treated at Tucson Water's Hayden-Udall Water Treatment Plant and delivered for direct use through Tucson Water's delivery system. Many changes have occurred, since the draft EIS was issued for public review and comment in April 1995, related to water management in the Tucson area. Consequently, assumptions that were used in developing and sizing the systems considered under the action alternatives discussed in the FEIS may no longer be valid. In light of the uncertainty regarding future use of CAP water in the region, Reclamation does not intend to issue a Record of Decision in the immediate future regarding implementation of the project. However, the fiscal year 1997 Appropriations Act specifically directed Reclamation to finalize the EIS; therefore, this FEIS is being filed with the Environmental Protection Agency.

Dated: April 10, 1998.

Robert W. Johnson,

Regional Director.

[FR Doc. 98–9943 Filed 4–14–98; 8:45 am]

BILLING CODE 4310–94–P

INTERNATIONAL TRADE COMMISSION

[Investigation No. 337–TA–383 Sanctions Proceeding]

Certain Hardware Logic Emulation Systems and Components Thereof; Order No. 100: Setting Procedural Schedule

This sanctions proceeding was instituted, and an Order issued on March 6, 1998. The notice of institution was published in the **Federal Register** on March 12, 1998 (63 FR 12113–4). Order No. 99, which issued on March 10, ordered each of the parties, no later than March 17, to state its positions on certain points. A telephone conference initiated by the administrative law judge was held on March 17. The reasons for the conference were telephone calls to the attorney-adviser on March 13 from complainant's counsel and on March 16, from counsel for certain respondents and from the staff, requesting that the due date of March 17 be deferred until April 3 (Tr. at 18). During the telephone conference counsel for complainant proposed reply briefs be filed on April 10. Counsel for certain respondents and the staff had no objection to that proposal (Tr. at 37, 38). The administrative law judge thereafter set March 27 for submissions, pursuant to Order No. 99 and April 3 for the filing of reply submissions, by *all* parties named in the Order of March 6 (Tr. at 46, 47). Also the staff was required to report to the administrative law judge on March 27 with respect to any negotiations on settlement (Tr. at 47).

On March 27 responses to Order No. 99 were received from complainant and the staff. Also a response was received from respondents Mentor Graphics Corporation and Meta Systems and certain of their present and former counsel (Brobeck, Phleger & Harrison LLP, Robert DeBerardine, and William Anthony) (Mentor). On April 3, replies were received from complainant and Mentor.

Complainant, in its response, represented that complainant, the staff, respondents Mentor Graphics Corporation and Meta Systems, and the law firm of Brobeck, Phleger & Harrison, LLP (Brobeck law firm) and its individual member parties have not been able to reach agreement on the precise dollar amount of sanctions to be awarded for any or all portions of Order No. 96 in issue and that while the staff has suggested a procedure to follow to arrive at an agreed amount for sanctions among all parties to this proceeding, and the parties are pursuing such procedure to see if agreement is possible, whether agreement will be reached as a result of this procedure will probably not be known until the latter part of April 1998. It was represented that with respect to the issue of making an adequate record for the determination of the sanction amount, complainant does not request nor believe any formal discovery is necessary, not is any evidentiary hearing believed necessary or requested because complainant intends to submit detailed affidavits in support of requested sanctions award. Complainant proposed that by April 17, 1998, it and

the staff each provide a submission, with appropriate affidavits, setting forth their respective costs, including attorneys fees (hours, tasks, rates), incurred (1) to establish conclusively the inaccuracy of Reblewski Exhibit A after Respondents' Supplemental Response to Interrogatories 77 and 79, dated October 22, 1996, (2) for complainant's attempts to read the database tape produced pursuant to Order No. 7, and (3) for filing and pursuing Motion No. 383–117 and such other relief permitted under that portion of Order No. 96 granting Motion No. 383–117. Complainant further proposed that respondents and the Brobeck law firm and its individual member parties be directed to respond by May 15, 1998, to complainant's and the staff's submissions, raising any and all objections to the dollar amounts asserted, including objections to the relationship of the costs asserted by complainant and the staff to the Commission's monetary sanctions award. It also proposed that complainant and the staff then be permitted to file a rebuttal submissions by May 26, 1998, and that respondents and the Brobeck law firm and its individual member parties be permitted to file a sur-rebuttal submission by June 5. It further proposed a one-day oral argument for June 18, 1998, if deemed necessary by the administrative law judge, after his review of the submissions.

Mentor, in its response, represented that because complainant has yet to provide Mentor with the dollar amount of sanctions sought or the basis for the amount sought, Mentor is not currently able to answer the question posed by the administrative law judge in Order No. 99 regarding whether any or all of the sanctions awarded can be agreed upon without the need for further proceeding and that Mentor is awaiting the information from complainant so that the parties can conduct meaningful discussions on this issue. Mentor also proposed that complainant be required to submit briefing setting out the amount of sanctions demanded and justification for that demand, including full disclosure of supporting documentation such as attorney time records and backup documentation; that then Mentor assess whether further discovery is needed to probe whether the amount demanded was ''actually caused by'' and ''specifically related to expenses incurred by'' the alleged conduct; that if Mentor determined that additional discovery is necessary, it will then serve document requests and deposition notices on Quickturn, and after this discovery, Mentor and the staff will submit their briefs in response to complainant's original briefing; and that if disputed issues of fact remain, an evidentiary hearing should be held.

The staff, in its response, waived any claims for monetary sanctions. The staff argued that the Commission's March 6, 1998 Order requires the administrative law judge to identify specifically by name those counsel who are liable for payment of monetary sanctions, but that it does not obligate the administrative law judge to determine any allocation of monetary sanction liability among counsel and their clients. Accordingly, it argued that respondents' counsel should be able to ''stipulate'' the identification of counsel to be held liable for payment of any monetary sanctions, and recommended that respondents' counsel be ordered to state no later than April 17, 1998 whether they will submit such a stipulation. The staff argued that while all parties are entitled to due process in this proceeding, it is presently unaware of any automatic entitlement to formal discovery or a live evidentiary hearing on the issues and argued that discovery, a hearing, and an opportunity to submit proposed briefs and proposed findings of fact would be appropriate only if the substantive issues are not resolved by stipulation. The staff represented that it will only seek such procedures if the administrative law judge grants the private litigants those opportunities. The staff further argued that the private parties should be able to provide a submission to the administrative law judge on April 17, 1998 indicating whether the dollar value of the sanctions has been resolved by agreement.

Based on the submissions of the parties:

1. Mentor is ordered no later than April 15, 1998 to identify counsel it believes should be held liable for any payment of monetary sanctions;

2. Complainant is ordered to file no later than April 17, 1998 sufficiently *detailed* affidavits, including any documentation and explanation in any supporting memorandum with authority, to enable this administrative law judge to consider all the factors necessary in setting the precise dollar amount of sanctions to be awarded pursuant to those portions of Order No. 96 adopted by the Commission and shall specifically identify those counsel it believes are liable for payment of the sanctions to be awarded;

3. Each of complainant and respondents, identified by the Commission in its March 6 Order, should provide to the administrative law judge no later than May 5, 1998 a statement whether the dollar value of any sanctions imposed by the Commission had been resolved by agreement;

4. Each of respondents, identified by the Commission in its March 6 Order, and the staff is ordered no later than Tuesday May 12, 1998 to respond to complainant's filing, referred to in 1 *supra*, raising any and all objections to the dollar amounts, including objection to the relationship of the costs asserted by complainant to the Commission's monetary sanctions award. Also they should file then supporting memoranda and authorities;

5. Complainant is ordered no later than May 22, 1998 to file a rebuttal submission; and

6. Each of respondents, identified by the Commission in its March 6, Order, and the staff is ordered to file a sur-rebuttal by Friday May 29.

At this time no further proceedings, in this sanctions proceeding, will be ordered. The parties will be notified, at a later date, on whether the administrative law judge will provide the parties with an opportunity for any additional proceedings.

On April 7, 1998, each of complainant, Mentor and the staff was notified about the issuance of this order. Also this order is being published in the **Federal Register** for notification of any other respondents.

Issued: April 7, 1998.

Paul J. Luckern,

Administrative Law Judge.

[FR Doc. 98–9949 Filed 4–14–98; 8:45 am]

BILLING CODE 7020–02–P

INTERNATIONAL TRADE COMMISSION

[Investigations Nos. 731–TA–761 and 762 (Final)]

Static Random Access Memory Semiconductors from the Republic of Korea and Taiwan

Determinations

On the basis of the record [1] developed in the subject investigations, the United States International Trade Commission determines, pursuant to section 735(b) of the Tariff Act of 1930 (19 U.S.C. 1673d(b)) (the Act), that an industry in the United States is not materially injured or threatened with material injury, and the establishment of an industry in the United States is not

[1] The record is defined in sec. 207.2(f) of the Commission's Rules of Practice and Procedure (19 CFR 207.2(f)).

materially retarded, by reason of imports from the Republic of Korea of static random access memory semiconductors (SRAMs)[2] that have been found by the Department of Commerce (Commerce) to be sold in the United States at less than fair value (LTFV). The Commission also determines,[3] pursuant to section 735(b) of the Act (19 U.S.C. 1673d(b)), that an industry in the United States is materially injured by reason of imports from Taiwan of SRAMs that have been found by Commerce to be sold in the United States at LTFV.

Background

The Commission instituted these investigations effective February 25, 1997, following receipt of a petition filed with the Commission and Commerce by Micron Technology Inc., Boise, ID. The final phase of the investigations was scheduled by the Commission following notification of preliminary determinations by Commerce that imports of SRAMs from Korea and Taiwan were being sold at LTFV within the meaning of section 733(b) of the Act (19 U.S.C. 1673b(b)). Notice of the scheduling of the Commission's investigations and of a public hearing to be held in connection therewith was given by posting copies of the notice in the Office of the Secretary, U.S. International Trade Commission, Washington, DC, and by publishing the notice in the **Federal Register** of October 16, 1997 (62 FR 53800). The hearing was held in Washington, DC, on February 18, 1998, and all persons who requested the opportunity were permitted to appear in person or by counsel.

The Commission transmitted its determinations in these investigations to the Secretary of Commerce on April 8, 1998. The views of the Commission are contained in USITC Publication 3098 (April 1998), entitled ''Static Random Access Memory Semiconductors From The Republic of Korea and Taiwan: Investigations Nos. 731–TA–761 and 762 (Final).''

Issued: April 9, 1998.

By order of the Commission.

Donna R. Koehnke,

Secretary.

[FR Doc. 98–9948 Filed 4–14–98; 8:45 am]

BILLING CODE 7020–02–P

[2] The products covered by these investigations are synchronous, asynchronous, and specialty SRAMs from Korea and Taiwan, whether assembled or unassembled. Assembled SRAMs include all package types. Unassembled SRAMs include processed wafers or die, uncut die, and cut die. Processed wafers produced in Korea or Taiwan, but packaged, or assembled into memory modules, in a third country, are included in the scope; processed wafers produced in a third country and assembled or packaged in Korea or Taiwan are not included in the scope.

The scope of these investigations includes modules containing SRAMs. Such modules include single in-line processing modules (SIPs), single in-line memory modules (SIMMs), dual in-line memory modules (DIMMs), memory cards, or other collections of SRAMs, whether unmounted or mounted on a circuit board. The scope of these investigations does not include SRAMs that are physically integrated with other components of a motherboard in such a manner as to constitute one inseparable amalgam (i.e., SRAMs soldered onto motherboards).

The SRAMs within the scope of these investigations are classified in statistical reporting numbers 8542.13.8037 through 8542.13.8049, 8473.30.1000 through 8473.30.9000, and 8542.13.8005 of the Harmonized Tariff Schedule of the United States (HTSUS).

[3] Vice Chairman Bragg voted in the affirmative, Chairman Miller voted in the negative, and Commissioner Crawford did not participate.

DEPARTMENT OF JUSTICE

Notice of Lodging of Consent Decree Pursuant to The Clean Water Act

In accordance with Department of Justice policy and 28 CFR 50.7, notice is hereby given that on March 26, 1998, a proposed consent decree in *United States* v. *J&L Specialty Steel, Inc.* Civil Action No. 5:96CV 0456, was lodged in the United States District Court for the Northern District of Ohio. The Complaint filed by the United States in this action asserted claims for injunctive relief and the assessment of civil penalties against J&L Specialty Steel, Inc. (''J&L'') under Section 309 (b) and (d) of the Clean Water Act (''the Act''), 33 U.S.C. § 1319 (b) and (d), for: violating certain terms and conditions of a National Pollutant Discharge Elimination System (''NPDES'') permit issued in 1983 for J&L's Louisville, Ohio facility; submitting inaccurate information in an application for a new NPDES permit; and failing to provide information requested by U.S. EPA pursuant to Section 308 of the Act.

The proposed consent decree requires J&L to comply with the Act and certain terms and conditions of its current NPDES permit. The proposed decree specifies various measures to be implemented by J&L to assure such compliance, including: (1) Elimination of process contact water flow and non-contact cooling water flow from one outfall at the facility; (2) demonstration of compliance with Foam and Sheen provisions of J&L's NPDES permit or development and implementation of a plan to control such discharges from J&L's facility; (3) installation of means to accurately monitor flow from a specified outfall at J&L's facility; and (4) a requirement to achieve and certify compliance with the information requests that EPA previously issued to J&L. In addition, the proposed Consent Decree requires J&L to pay the United States $200,000.00 in civil penalties and to implement three Supplemental Environmental Projects, with estimated costs to J&L of approximately $370,000.00.

The Department of Justice will receive for a period of thirty (30) days from the date of this publication comments concerning the proposed Consent Decree. Comments should be addressed to the Assistant Attorney General, Environment and Natural Resources Division, U.S. Department of Justice, P.O. Box 7611, Ben Franklin Station, Washington, D.C. 20044, and should refer to *United States* v. *J&L Specialty Steel, Inc.*, D.J. Ref. No. 90–5–1–1–4212.

The proposed Consent Decree may be examined at any of the following offices: (1) the United States Attorney for the Northern District of Ohio, 1800 Bank One Center, 600 Superior Avenue, East, Cleveland, OH 44114–2600 (contact Assistant United States Attorney Arthur I. Harris); (2) the U.S. Environmental Protection Agency, Region 5, 77 West Jackson Boulevard, Chicago, Illinois 60604–3590 (contact Associate Regional Counsel Joseph Williams); and at the Consent Decree Library, 1120 G Street, N.W., 4th Floor, Washington, D.C. 20005, 202–624–0892. Copies of the proposed Consent Decree may be obtained in person or by mail from the Consent Decree Library, 1120 G Street, N.W., 4th Floor, Washington, D.C. 20005, telephone (202) 624–0892. For a copy of the Consent Decree please enclose a check in the amount of $8.25 (25 cents per page reproduction costs) payable to Consent Decree Library.

Joel M. Gross,

Section Chief, Environmental Enforcement Section, Environment and Natural Resources Division.

[FR Doc. 98–9970 Filed 4–14–98; 8:45 am]

BILLING CODE 4410–15–M

DEPARTMENT OF JUSTICE

Office of Justice Programs

Office for Victims of Crime: Agency Information Collection Activities; Proposed Collection; Comment Request

ACTION: Notice of Information Collection Under Review; New Collection; OVC Preliminary Questionnaire to Determine Hate/Bias Crime Record-keeping Practices.

The proposed information collection is published to obtain comments from

the public and affected agencies. Comments are encouraged and will be accepted until June 15, 1998. Request written comments and suggestions from the public and affected agencies concerning the proposed collection of information. Your comments should address the following points:

(1) Does the proposed information collection instrument include all relevant program performance measures?

(2) Does the proposed information to be collected have practical utility?

(3) Does the proposed information to be collected enhance the quality, utility, and clarity of the information to be collected; and

(4) Minimize the burden of the collection of information on those who are to respond, including through the use of appropriate automated, electronic, mechanical, or other technological collection techniques or other forms of information technology, e.g., permitting electronic submission of responses.

If you have additional comments, suggestions, or need a copy of the proposed information collection instrument with instructions, or additional information, please contact Celestine Williams, 202/616–3565, Office for Victims of Crime, Office of Justice Programs, U.S. Department of Justice, 810–7th Street, N.W., Washington, D.C. 20531.

The proposed collected is listed below:

(1) *Type of information collection.* New collection.

(2) *The title of the form/collection.* Preliminary Questionnaire to Determine Hate/Bias Crime Record-keeping Practices.

(3) The agency form number, if any, and the applicable component of the Department sponsoring the collection.

Form: None. Office for Victims of Crime, Office of Justice Programs, U.S. Department of Justice.

(4) *Affected public who will be asked or required to respond, as well as a brief abstract. Primary:* State and Local. Other Non-profit agencies receiving federal VOCA funds to serve crime victims.

(5) *An estimate of the total number of respondents and the amount of time estimated for an average respondent to respond:* 2,925 respondents to complete a 15 minute to 2 hour mail survey.

(6) *An estimate of the total burden (in hours) associated with the collection:* A minimum of 731 hours (15 minutes x 2,925 respondents), or a maximum of 5,850 (2 hours x 2,925 respondents).

If additional information is required contact: Mr. Robert B. Briggs, Clearance Officer, United States Department of Justice, Information Management and Security Staff, Justice Management Division, Suite 850, Washington Center, 1001 G Street, N.W., Washington, D.C. 20530.

Dated: April 10, 1998.

Robert B. Briggs,

Department Clearance Officer, U.S. Department of Justice.

[FR Doc. 98–9919 Filed 4–14–98; 8:45 am]

BILLING CODE 4410–18–M

DEPARTMENT OF LABOR

Employment and Training Administration

Welfare-to-Work Competitive Grants

AGENCY: Employment and Training Administration (ETA), DOL.

ACTION: Notice of availability of funds; solicitation for grant applications.

SUMMARY: The U.S. Department of Labor (DOL), Employment and Training Administration (ETA) announces the second round of competitive grants under a two year Welfare-to-Work (WtW) grant program enacted under the Balanced Budget Act of 1997. The WtW program assists States and local communities to provide the transitional employment assistance needed to move hard-to-employ recipients of Temporary Assistance to Needy Families (TANF) into lasting unsubsidized jobs. WtW grants are targeted to assisting those TANF recipients, and certain noncustodial parents, who have experienced, or have characteristics associated with, long-term welfare dependence. This announcement describes the conditions under which applications will be received under the Welfare-to-Work (WtW) Competitive Grants Program and how DOL/ETA will determine which applications it will fund. This announcement includes all of the information and forms needed to apply for WtW competitive grants.

DATES: The closing date for receipt of applications under this announcement is July 14, 1998. For the funding cycle covered by this announcement, complete applications must be received at the address below no later than 2 p.m. EST (Eastern Standard Time). Except as provided below, grant applications received after this date and time will not be considered. Applications which are not accepted for this announcement must be resubmitted to be considered for future announcements.

ADDRESSES: U.S. Department of Labor, Employment and Training Administration, Division of Acquisition Assistance, Attention: Ms. Mamie D. Williams, SGA/DAA 98–009, 200 Constitution Avenue, NW, Room S4203, Washington, D.C. 20210.

FOR FURTHER INFORMATION CONTACT: Questions should be faxed to Ms. Mamie D. Williams, Grant Management Specialist, Division of Acquisition Assistance, Fax: (202) 219–8739. This is not a toll-free number. Questions may also be sent via electronic mail to ''disgu-sga@doleta.gov.'' All inquiries sent via fax or e-mail should include the SGA number (DAA 98–009) and a contact name and phone number. This announcement is also being published on the Internet on the Employment and Training Administration's Welfare-to-Work Home Page at http://wtw.doleta.gov. Commonly asked questions and answers with regard to the WtW competitive grants and the WtW program in general, and copies of the Interim Final Rule governing the Welfare-to-Work program, including activities conducted under the competitive grants, are also available on the WtW Home Page. In addition, award notifications will be published on the WtW Home Page.

SUPPLEMENTARY INFORMATION:

I. Authority

Section 403(a)(5)(B) of Title IV of the Social Security Act. Regulations governing the WtW program are at 20 CFR Part 645, published at 62 FR 61588. This Interim Final Rule was published in the **Federal Register** on November 18, 1997.

II. Submission of Applications

Four copies of the application must be submitted, one of which must contain an original signature. Proposals must be submitted by the applicant only.

All applications must be single-spaced, and on single-sided, numbered pages. A font size of at least 12 pitch is required. Section I of the application must include the following three required elements: (1) The Project Financial Plan, including the SF–424, (2) ETA Form 9070, Project Synopsis Form, and (3) Evidence of State and local consultation. Section I will not count against the application page limits.

Section II of the application, the project narrative, shall not exceed twenty (20) pages for the Government Requirements/Statement of Work section, as described below in the ''Required Content for WtW Competitive Grant Applications—Fiscal Year 1998,'' plus an additional ten (10) pages for Attachments, to include no information that is critical to the review of the

proposal. Letters of support for a proposal should NOT be submitted and will count against the page limits.

Acceptable Methods of Submission

Applications may be hand-delivered or mailed. Hand-delivered applications must be received at the address identified above by the date and time specified. Overnight mail deliveries will be treated as hand-deliveries. Mailed applications that arrive after the closing date will be accepted if they are post-marked at least five (5) days prior to the closing date. Applications submitted via overnight mail that arrive after the closing date will be accepted if they are post-marked at least two (2) days prior to the closing date. Otherwise, late applications will not be accepted. Telegraphed and/or faxed applications will not be accepted.

Applications may be withdrawn by written notice or telegram (including mailgram), or in person if the representative's identity is made known, and the representative signs a receipt for the application.

OMB Approval of Paperwork Burden

According to the Paperwork Reduction Act of 1995, no persons are required to respond to a collection of information unless such collection displays a valid OMB control number. The valid OMB control number for this information collection is 1205–0387. The time required to complete this information collection is estimated to average twenty (20) hours per response, including the time to review the instructions, search existing data resources, gather data needed, and complete and review the information. Comments concerning this burden estimate or any other aspect of this collection of information, including suggestions for reducing this burden, to the U.S. Department of Labor, Office of Job Training Programs, Room N4459, Washington, DC 20210 (Paperwork Reduction Project 1205–0387). Comments may be reflected in the development of future solicitations.

Catalog of Federal Domestic Assistance Number

The Welfare-to-Work program is listed in the *Catalog of Federal Domestic Assistance* at No. 17.253, ''Employment and Training Assistance—Welfare-to-Work Grants to States & Local Entities for Hard-to-Employ Welfare Recipient Programs.''

III. Program Scope and Funding

Competitive grant projects will be expected to achieve the purpose of all WtW grants:

To provide transitional assistance which moves welfare recipients into unsubsidized employment providing good career potential for achieving economic self-sufficiency.

This transitional assistance is to be provided through a ''work first'' service strategy in which recipients are engaged in employment-based activities. Grant funds may be used to provide needed basic and/or vocational skills training as a post-employment service in conjunction with either subsidized or unsubsidized employment. This flexibility, established in the Regulations, reflects the basic ''work first'' philosophy of the WtW legislation, and recognizes the critical importance of continuous skills acquisition and lifelong learning to economic self-sufficiency.

All competitive grant projects will be expected to be an integral part of a comprehensive strategy for moving eligible individuals into unsubsidized employment in a local, community-based context. Projects should develop and implement innovative approaches that enhance a community's ability to move eligible individuals into self-sustaining employment, create upward mobility paths and higher earnings potential for WtW participants, and achieve sustainable improvements in the community's service infrastructure for assisting welfare recipients. All applications will be reviewed under the criteria set forth in Part VII of this announcement, including the effectiveness of the proposal in moving TANF recipients who are least job ready into unsubsidized employment, in moving such recipients into unsubsidized employment in labor markets that have a shortage of low-skill jobs, and in expanding the base of knowledge about programs aimed at moving TANF recipients into long-term unsubsidized employment.

Areas of Special Interest

In addition to proposing innovative strategies for moving welfare recipients into lasting unsubsidized employment, applicants are encouraged to consider the following in designing responsive service strategies for the eligible population in their local area:

- Targeted assistance to specific subgroups of the eligible populations such as noncustodial parents, individuals with learning disabilities, individuals who require substance abuse treatment for employment, and public housing residents;
- Development of responsive transportation and child care service systems;
- Use of integrated work and learning strategies to develop skills;
- Creation of job opportunities (including self-employment) that allow for flexibility to address work and family needs while providing income levels that are adequate for self-sufficiency;
- Proactive strategies to involve employers in design of service strategies and implementation of the project;
- Strategies that focus on family-based assistance and that are integrated with children systems (e.g., Child Care, Head Start) that can assist the full family unit;
- Activities to help women access nontraditional occupations; and
- Strategies that reflect effective integration with both the workforce development (e.g., One-Stop) and welfare systems.

In identifying those Areas of Special Interest addressed by the proposal on the Project Synopsis form (Required format can be found in Appendix C), please indicate the page number on which relevant text relating to this interest area can be found in the proposal narrative.

The Department is also interested in receiving applications to implement projects that are coordinated with community saturation strategies (in which comprehensive services are available to assist all of the eligible residents in a defined community). The Department expects that these applications would be submitted from communities in which there are concentrations of eligible hard-to-employ individuals, there is a reasonable opportunity to provide employment for all such individuals, and there are established partnerships which can contribute a significant level of resources to implement the strategy. A definition of community saturation strategy is provided in Appendix B.

Funding Availability

A total of $368.25 million is available for competitive grant awards in Fiscal Year (FY) 1998 and $343.25 million in FY 99. Approximately $184 million (or 50 percent of FY 98 competitive grant funding) is available for Federal grant assistance through this announcement. Of the funds available in FY 98, the Department aims to distribute approximately 70 percent for projects to serve cities with large concentrations of poverty and 30 percent for projects to serve rural areas. Definitions for ''cities with large concentrations of poverty'' and ''rural area'' can be found in Appendix B of this announcement. Applications to serve rural areas should be targeted to serve eligible residents from subareas that represent concentrations of poverty. Further, as

indicated under the Criteria section of this solicitation, applications are strongly encouraged to present innovative strategies to address the needs of areas with concentrations of poverty. Each application must indicate on the required Project Synopsis Form either a rural or an urban focus for its project services.

It is expected that most grant awards will be between $1 million and $5 million. Furthermore, it is expected that most grants will serve a minimum of 100 eligible participants. Applications that are outside of this range must provide a brief explanation of how the project will have substantial community impact (especially for those below $1 million and/or fewer than 100 participants), or how project services will be provided on a local level and targeted to the specific needs of the defined target group (especially for those applications over $5 million).

Award Period

It is expected that the planned performance period for most projects will be between 18 and 30 months. Grant funds are not available for expenditure for longer than three years. No obligation or commitment of funds will be allowed beyond the grant period of performance. Any unspent grant funds must be returned to the Department of Labor.

IV. Eligible Grant Applicants

Private Industry Councils (PIC), political subdivisions of the State (as defined in Appendix B), and private entities (as defined in Appendix B) are eligible to receive grant funds under this announcement. Eligible private entities include community development corporations, community action agencies, community-based and faith-based organizations, disability community organizations, public and private colleges and universities, and other qualified private organizations. Private entities include both non-profit and for-profit organizations but do not include individuals.

Entities other than a PIC or a political subdivision of the State must submit an application for competitive grant funds in conjunction with the PIC(s) or political subdivision(s) for the area in which the project is to operate. The term ''in conjunction with'' shall mean that the application must include a signed certification by both the applicant and either the appropriate PIC(s) or political subdivision(s) indicating that:

1. The applicant has consulted with the appropriate PIC(s)/political subdivision(s) during the development of the application; and

2. The activities proposed in the application are consistent with, and will be coordinated with, the WtW efforts of the PIC(s)/political subdivision(s).

If the applicant is unable to obtain the certification, it will be required to include information describing the efforts which were undertaken to consult with the PIC(s)/political subdivision(s) and indicating that the PIC(s)/political subdivision(s) were provided a sufficient opportunity to cooperate in the development of the project plan and to review and comment on the application prior to its submission to the Department of Labor. ''Sufficient opportunity for PIC/political subdivision review and comment'' shall mean at least 30 calendar days.

The certification, or evidence of efforts to consult, must be with either each PIC or each political subdivision in the service area in which the proposed project is to operate. These certifications must be included in Section I of the grant application, and will not count against the established page limitations. For the purposes of this portion of the application, evidence of efforts to consult with the PIC/political subdivision must be demonstrated by written documentation, such as registered mail receipt, that attempts were made to share project applications with the PIC/political subdivision in a timely manner.

State-level Consultation

All applicants for competitive grants, including PICs and political subdivisions, must submit their applications to the Governor or, at the discretion of the Governor, to the designated State administrative entity for the WtW program, for review and comment prior to submission of the application to the Department. For private entities, State review must be subsequent to review by the PIC or political entity. When submitted to the Department, the application must include any comments from the Governor or his/her designee or must include information indicating that the Governor was provided a sufficient opportunity for review and comment prior to submission to the Department. ''Sufficient opportunity for State review and comment'' shall mean at least 15 calendar days. For the purposes of this portion of the application, information indicating that the Governor was provided opportunity for review must be demonstrated by written documentation, such as registered mail receipt, that attempts were made to submit project applications to the Governor or his/her designee in a timely manner.

Applicants for Multiple Community or National Projects

Consideration will be given to applications which propose multi-community or national strategies to move welfare recipients into long-term unsubsidized employment leading to economic self-sufficiency. For example, an applicant may design a nationwide project to create jobs for welfare recipients in a particular industry. Applications which propose multi-community or national strategies must meet all of the application requirements contained in this Announcement. Specifically, private entities proposing such projects must include the signed certification from the applicable PIC or political subdivision of each SDA in which the project will operate or other evidence indicating the efforts undertaken to obtain the required consultation as described above. Such applications must also demonstrate the required consultation with the Governors of the States in which the project will operate. Applications proposing national projects must comply with all statutory and regulatory requirements and will be rated under the same evaluation criteria as other applications. Applicants should be aware that the extent of local collaboration demonstrated in a national project will be considered as an important factor in the overall strength of the proposal.

Lobbying Disclosure Act of 1995

Entities described in Section 501(c)(4) of the Internal Revenue Code that engage in lobbying activities are not eligible to receive funds under this announcement. The Lobbying Disclosure Act of 1995, Public Law 104–65, 109 Stat. 691, prohibits the award of Federal funds to these entities if they engage in lobbying activities.

V. Program and Administrative Requirements

Participant Eligibility and Funding Expenditures

Each project will be required to meet the targeting provisions described at 20 CFR 645.211–645.213. [NOTE: The WtW Regulations are available at the WtW Internet web site at http://wtw.doleta.gov.] These provisions dictate that a minimum of 70 percent of the funds in each WtW competitive grant must be used to serve hard-to-employ individuals as described in Sec. 645.212. Furthermore, no more than 30 percent of the funds in each grant may be used to serve individuals with characteristics predictive of long-term

welfare dependence, as described in Sec. 645.213.

Allowable Uses of Funds

Competitive grant funds shall only be spent for those activities identified in the WtW Regulations, at 20 CFR 645.220 and set forth below, for appropriate administrative costs, and for information technology costs in accordance with 20 CFR 645.235(c)(3).

WtW allowable activities are:

(a) Job readiness activities financed through job vouchers or through contracts with public or private providers.

(b) Employment activities which consist of any of the following: (1) Community service programs; (2) Work experience programs; (3) Job creation through public or private sector employment wage subsidies; and (4) On-the-job training.

(c) Job placement services financed through job vouchers or through contracts with public or private providers subject to the payment requirements at § 645.230(a)(3).

(d) Post-employment services financed through job vouchers or through contracts with public or private providers, which are provided after an individual is placed in one of the employment activities listed in paragraph (b) above, or in any other subsidized or unsubsidized job. Post-employment services include, but are not limited to, such services as: (1) Basic educational skills training; (2) Occupational skills training; (3) English as a second language training; and (4) Mentoring.

(e) Job retention services and support services which are provided after an individual is placed in a job readiness activity, as specified in paragraph (a) above, in one of the employment activities, as specified in paragraph (b) above, or in any other subsidized or unsubsidized job. These services can be provided with WtW funds only if they are not otherwise available to the participant. Job retention and support services include, but are not limited to, such services as: (1) Transportation assistance; (2) Substance abuse treatment (except that WtW funds may not be used to provide medical treatment); (3) Child care assistance; (4) Emergency or short term housing assistance; and (5) Other supportive services.

(f) Individual development accounts which are established in accordance with section 404(h) of the Act.

(g) Intake, assessment, eligibility determination, development of an individualized service strategy, and case management may be incorporated in the design of any of the allowable activities listed in paragraphs (a) through (f) above.

Administrative Costs

Allowable costs and the 15 percent limitation on administrative costs for WtW competitive grants are defined in the WtW Regulations at 20 CFR 645.235. All proposed costs must be reflected as either a direct charge to specific budget line items, or as an indirect cost. Direct and indirect administrative costs are allowable, but combined, these costs cannot exceed 15 percent of the total grant. The administrative costs negotiated in the final grant document may be below fifteen percent.

Only costs which result from applying a Federally-approved indirect cost rate may be entered on the ''indirect cost'' line item of the budget. If an indirect cost rate is used, the applicant must include documentation from the cognizant Federal agency which includes the approved rate, the cost base against which it is applied, and the approval date.

All applicants will be expected to justify proposed costs (see Item 3 of the Financial Plan in the ''Required Content for WtW Competitive Grants Applications—Fiscal Year 1998''). Profits are not an allowable use of grant funds.

Use of Federal Funds

Federal funds cannot be used to support activities which would be provided in the absence of those funds. Grant funds may cover only those costs which are appropriate and reasonable. Federal grant funds may only be used to acquire equipment which is necessary for the operation of the grant. The grantee must receive prior approval from the DOL/ETA Grant Officer for the purchase and/or lease of any property and/or equipment with a per unit acquisition cost of $5,000 or more, and a useful life of more than one year as defined in the ''Uniform Administrative Requirements for Grants and Cooperative Agreements to State and Local Governments'', codified at 29 CFR Part 97 (also known as the ''Common Rule''), and ''Grants and Agreements with Institutes of Higher Education, Hospitals and Other Non-Profit Organizations'', codified at 29 CFR Part 95 (also known as OMB Circular A–110). This restriction includes the purchase of Automated Data Processing (ADP) equipment. A request for such prior approval may be included in the grant application or submitted after the grant award. Requests submitted after the grant award must be directed through the Grant Officer Technical Representative (GOTR) and must include a detailed description and cost of the items to be acquired.

Grant funds also may not be used to cover any project-related costs incurred prior to the effective date of the grant award. In making a grant award, DOL/ETA has no obligation to provide any future additional funding in connection with the grant award.

Pursuant to 20 CFR 645.235(c)(3), the costs of information technology—computer hardware and software—needed for tracking or monitoring under a WtW grant are not subject to the fifteen percent limitation on administrative costs.

Year 2000 Compliance

Any information technology purchased in whole or in part with WtW funds, which is used for a period of time that goes beyond December 31, 1999, must be ''year 2000 compliant.'' This means that such information technology shall accurately process date/time data (including, but not limited to, calculating, comparing and sequencing) from, into and between the twentieth and twenty-first centuries, the years 1999 and 2000, and leap year calculations. Furthermore, ''year 2000 compliant'' information technology, when used in combination with other information technology, shall accurately process date/time data if the other information technology properly exchanges date/time with it.

Assurances and Certifications

The following assurances and certifications must be included as part of each grant application: Debarment & Suspension Certification.

Other assurances and certifications will be required as part of each executed grant agreement, but do not need to be submitted as part of a WtW Competitive grant application: Assurances/Non-Construction Programs; Certification Regarding Lobbying; Drug Free Workplace Certification; Certification of Non-delinquency; and Non-discrimination and Equal Opportunity Requirements.

Departmental Oversight

The Department reserves the right to conduct oversight and both programmatic and financial monitoring activities for all competitive grants awarded under the WtW grants program.

Department of Health and Human Services Evaluation of the Welfare-to-Work Program

Competitive grant projects will participate in the evaluation of the WtW

grant program by the U.S. Department of Health and Human Services (DHHS), as described in Title IV, section 413(j)(1) of the Social Security Act. The goal of the DHHS evaluation is to expand the base of knowledge about programs aimed at moving the least job ready welfare recipients into unsubsidized employment. The evaluation will collect program and administrative data to determine the range of WtW project designs and the employment outcomes for all WtW grantees, consistent with sec. 413(j)(1)(C) of the Social Security Act. In addition, DHHS will select certain sites at which to qualitatively study the implementation of the WtW program and other sites where net impact and cost effectiveness of the program will be examined quantitatively.

VI. Monitoring & Reporting

Monitoring

The Department shall be responsible for ensuring effective implementation of each competitive grant project in accordance with the Act, the Regulations, the provisions of this announcement and the negotiated grant agreement. Applicants should assume that at least one on-site project review will be conducted by Department staff, or their designees, at approximately the midpoint of the project performance period. This review will focus on the project's performance in meeting the grant's programmatic goals and participant outcomes, complying with the targeting requirements regarding recipients who are served, expenditure of grant funds on allowable activities, integration with other resources and service providers in the local area, and methods for assessment of the responsiveness and effectiveness of the services being provided. Grants may be subject to other additional reviews at the discretion of the Department.

Reporting

Applicants selected as grantees will be required to provide the following reports:

1. Financial Reporting: The Department of Labor (DOL) will issue financial reporting instructions for competitive grantees shortly. Financial reports will be submitted directly to DOL.

2. Participant Reporting: Participant reporting instructions will be issued shortly covering the entire WtW program. Participant reports for each competitive grant will be submitted in accordance with reporting instructions at a later date.

3. Other Reporting: The Department of Labor may negotiate additional reporting requirements with individual grantees, where necessary, for grants management and/or knowledge development purposes. In addition to required quarterly financial and participant reporting, some grantees may be asked to provide information to the appropriate ETA Regional Office during the early implementation phase of the project for the purpose of project oversight. This information may include project enrollment levels, participant characteristics, and emerging implementation issues.

VII. Review and Selection of Applications for Grant Award Review Process

The Department will screen all applications to determine whether all required elements are present and clearly identifiable. These elements are described below in the ''Required Content for WtW Competitive Grant Applications—Fiscal Year 1998.'' Failure to include and all required elements in Section I of the grant application will result in rejection of the application.

Each complete application will be objectively rated by a panel against the criteria described in this announcement. Applicants are advised that the panel recommendations to the Grant Officer are advisory in nature. The Grant Officer may elect to award grants either with or without discussion with the applicant. In situations where no discussions occur, an award will be based on the applicant's signature on the SF424 form (See Appendix C), which constitutes a binding offer. The Grant Officer will make final award decisions based on what is most advantageous to the Government, considering factors such as: Panel findings; the geographic distribution of the competitive applications; the extent to which the competitive applications reflect a reasonable distribution of funds across the areas of special interest identified in this announcement; and the availability of funds.

Criteria

The criteria, and the weights assigned to each, which will apply to the review of applications submitted in response to this announcement are:

1. ''Relative Need for Assistance'' [20 points] which shall consider the concentration of poverty and long-term welfare dependence and the lack of employment opportunities in the project service area (up to 9 points); the extent of gaps in the capacity of the local infrastructure to effectively address the employment barriers which characterize the targeted population (up to 6 points); and the responsiveness of the project design to the areas of special interest identified in Part III of this announcement (up to 5 points).

2. ''Innovation'' [20 points] which shall consider the extent to which the project incorporates new and better strategies for moving welfare recipients into lasting unsubsidized employment leading to economic self-sufficiency. These strategies can include, but are not limited to, new and better ways that services can be accessed by participants in the local community, new and better ways for local organizations to work together, or the replication of effective strategies in a new setting.

3. ''Outcomes'' [25 points] which shall consider the quality of the proposed employment and earnings outcomes (up to 10 points); the extent to which the proposed plan of services responds to identified needs, the barriers faced by proposed participants, and the conditions in the local area as well as the likelihood that the proposed service plan will result in the proposed outcomes (up to 12 points); and the reasonableness of the level of investment in relation to the proposed outcomes (up to 3 points).

4. ''Local Collaboration and Sustainability'' [25 points] which shall consider the extent to which the project is coordinated with the WtW formula grant and TANF grant activities and supported by the PIC/political subdivision and local TANF agency (up to 4 points); the extent and quality of local community partnerships that are involved in and making substantial contributions of resources to the project (up to 11 points); involvement of and participation by local employers (up 5 points); and the extent to which the community and/or the local area has developed plans and commitments to maintain and expand the capacity to serve the target population with local resources over a sustained period of time (up to 5 points).

5. ''Demonstrated Capability'' [10 points] which shall consider the extent to which the applicant and its partner organizations demonstrate a history of success in serving a comparable target group, the extent of use of current or former welfare recipients in the provision of services, and the extent to which the applicant demonstrates the ability to effectively execute grant management responsibilities.

For those proposals that are deemed by the Grant Officer to be most competitive, applicants proposing projects in which the majority of participants to be served by the project

reside in designated Empowerment Zones and Enterprise Communities (EZ/EC) will be eligible for 5 bonus points.

In addition, proposals that are deemed by the Grant Officer to be most competitive, that plan to serve at least 450 WtW participants, and that are willing to participate in a random assignment evaluation may be awarded from zero to five bonus points (based on a DHHS assessment of the suitability of the project for evaluation against the criteria outlined in Appendix A). Projects selected to participate in a random assignment evaluation may also be able to access additional technical assistance resources, as well as a small amount of funding to offset the additional administrative costs of random assignment. These applicants should submit the additional information identified in Appendix A of this announcement. This information will be submitted as an Addendum to the grant application and will not be counted against the application page limit or count as an Attachment.

Signed at Washington, D.C., this 9th day of April, 1998.

Janice E. Perry,

Grant Officer.

Required Content for WtW Competitive Grant Applications Fiscal Year 1998

Each application must contain the information and follow the format outlined in this Part. The application should include: (1) Information that responds to these requirements; (2) information that indicates adherence to the provisions described in preceding sections of this announcement; and (3) any other information the applicant believes will address the review and selection criteria.

I. Project Summary

A. Project Financial Plan

Information provided in this section will be evaluated predominantly under the ''Outcomes'' criteria.

The financial plan shall describe all costs associated with implementing the project that are to be covered with grant funds. All costs should be necessary and reasonable according to the Federal guidelines set forth in the ''Uniform Administrative Requirements for Grants and Cooperative Agreements to State and Local Governments'', codified at 29 CFR Part 97 (also known as the ''Common Rule''), and ''Grants and Agreements with Institutes of Higher Education, Hospitals and Other Non-Profit Organizations'' (also known as OMB Circular A–110), codified at 29 CFR Part 95.

The financial plan must contain the following parts:

- ''Application for Federal Assistance'' and ''Budget Information Sheet'' by line item for all costs required to implement the project design effectively. Submission of these two completed forms is required. (See Appendix C for these required forms.)

Note: Although there is no matching requirement for these grants, the Department strongly encourages the leveraging of resources in the implementation of WtW competitive grant projects. On the Budget Information form, the ''Matching/Cost Sharing'' section of the form provides an opportunity for applicants to reflect such leveraged resources.

- Budget narrative/justification which provides sufficient information to support the reasonableness of the costs included in the budget in relation to the service strategy and planned outcomes.

B. Project Synopsis Form—ETA Form 9070

Each application shall provide a project synopsis which identifies the applicant, the type of organization, the project service area, whether the service area is a city with a large concentration of poverty or a rural area, the specific areas of interest identified in the announcement which are addressed by the project (with page numbers where relevant portions of the project narrative can be found), the amount of grant funds requested, the planned period of performance, the planned number of WtW-eligible TANF recipients to be served, the number of noncustodial parents to be served (if applicable), the significant employment barriers which characterize the target group, the planned employment and earnings outcomes, a summary description of the proposed service strategy, and other significant service organizations involved in the delivery of services. This section must be limited to no more than two single-spaced, single-sided pages. The required format for this synopsis can be found in Appendix D.

C. Evidence of Required Local and State Consultation

It is the expectation of the Department that, to the extent possible, all applications will be developed in consultation with the appropriate PIC/political subdivision and the Governor. Competitive grant projects should complement the WtW formula program activity, rather than exist independent of, or in conflict with, that program.

Each application must include the signed certification or other evidence of the required consultation with the Governor as described in this announcement. Applications from private entities must also include the signed certification from the appropriate PIC(s) or political subdivision(s) or other evidence indicating the efforts undertaken to obtain the required consultation as described in this announcement. In areas where an entity other than the PIC has been designated by the Governor and approved by the Secretary to administer the WtW formula grant, the applicant should also include evidence of consultation and/or support from that entity. All certifications or comments provided as part of this requirement must be included in this section of the grant application and will not be counted against the established page limits.

II. Government Requirements/Statement of Work—Project Narrative

This section of the application should not exceed 20 single-spaced, numbered pages. The application should include information of the type described below, as appropriate.

Description of Service Area

Information provided in this section will be evaluated predominantly under the ''Relative Need'' criteria.

—Identify the specific political and geographic jurisdictions (e.g., cities, counties, subsections of cities/counties) which are included in the service area for the project.

—Identify the percent of the population in the service area that has income below the poverty level.

—Identify the percent of the population in the service area that is receiving TANF assistance

Note: Child-only TANF cases should be excluded from this number unless these cases are relevant to the project target group.

—Identify the percent of the TANF population that has received TANF or AFDC assistance for 30 months or more, or is within 12 months of losing eligibility for assistance under State or Federal law (Note: Child-only TANF cases should be excluded from this number unless these cases are relevant to the project target group).

—Identify the most recent unemployment rate in the service area.

—Describe the significant deficiencies in the local area infrastructure that represent significant barriers to moving eligible recipients into permanent employment in an efficient manner (e.g., lack of transportation, labor market with a shortage of low-skill jobs, shortage of employers with appropriate employment opportunities, remoteness from health

facilities, limited number of social and support service agencies).

Summary of Strategy for Use of WtW Formula Funds in the Local Area

Information provided in this section will be evaluated predominantly under the ''Local Collaboration and Sustainability'' criteria.

—Identify the substate service area covered by the WtW formula grant.

—Describe the allocation of formula grant funds among the allowable activities.

—Identify the significant local and community organizations involved and their roles in providing assistance through the formula grant.

—Describe how the proposed competitive grant project will supplement and enhance the capacity of the WtW formula grant activities to effectively serve eligible recipients in the local area who have significant employment barriers.

—In cases where the applicant cannot obtain this information because the State has not yet submitted a complete WtW Formula Grant Plan, the application should so indicate. Absence of this information, in and of itself, will not penalize the applicant.

Analysis of Target Group

Information provided in this section will be evaluated predominantly under the ''Relative Need'' criteria.

—Describe the individuals targeted for assistance through this project, including any noncustodial parents.

—Describe the significant employment barriers which characterize this target group, including the process for identifying those participants who are least job ready.

Note: An adequate analysis of employment barriers of the target group will be a critical factor in evaluating the need for grant assistance and the appropriateness of the proposed plan of services.

Analysis of Employment Opportunities

Information provided in this section will be evaluated predominantly under the ''Relative Need'' criteria.

—Identify the types of occupations in the local area which are being targeted as appropriate employment opportunities for the target group of this project.

—Describe the justification for the selection of the occupations in terms of their availability and the adequacy of expected placement wage and post-placement earnings potential to achieve self-sufficiency.

Service Strategy

Information provided in this section will be evaluated predominantly under the ''Innovation'' and Outcomes'' criteria.

—Identify the specific job readiness, placement (in both subsidized and unsubsidized employment), post-employment, job retention and/or support services to be provided with competitive grant funds as well as services to be leveraged from other sources.

—Describe the rationale for planned enrollments in activities in terms of the employment barriers, infrastructure deficiencies and employment opportunities previously identified above (enrollments in each activity will be reflected in the Quarterly Implementation Plan).

—Where vouchers for services are to be used, describe the process by which vouchers will be distributed and redeemed (in compliance with 20 CFR Sec. 645.230(a)(3)), including who will be eligible, how amounts of vouchers will be determined, and how the grantee will ensure that quality services are being provided.

Service Process

Information provided in this section will be evaluated predominantly under the ''Innovation'' and ''Outcomes'' criteria.

—Describe the comprehensive service process that will be available to participants, and identify the organizations which will be involved in providing specific services/activities. [A process flowchart and/or service matrix may be used to provide this description.] The description should specify what elements of the service strategy are already available in the community, whether through the WtW formula program, the TANF program or from other sources, as well as the elements or services that will be funded through the WtW competitive grant award. Also describe what individual support services, such as mentoring and case management, will be used to maintain participants in the program.

—Describe the specific methods which will be used by the grantee and the local TANF agency to coordinate and work jointly in providing the following services: Outreach, recruitment, and referral of appropriate recipients for assistance through the project; assessment of skills and identification of specific employment barriers; counseling and case management; and support services.

Integration of Resources

Information provided in this section will be evaluated predominantly under the ''Local Collaboration and Sustainability'' criteria.

—Identify specific financial resources and organizational/service provider capabilities which are being contributed to provide the full range of assistance to the identified target group for the project. At a minimum, describe the coordination and contributions of local JTPA service providers, local TANF providers, and local housing and transportation authorities. In developing their plans, applicants are encouraged to be mindful of their obligations not to interfere with collective bargaining rights or agreements or to displace employees.

—Describe the process that will be used to maintain and expand the service structure in the local area and engage new partners after receipt of WtW competitive grant funds.

—Describe how the project will develop a sustainable capacity in the local community to effectively move welfare recipients into permanent jobs and to foster the long-term self-sufficiency of the target population. It is expected that project services will provide assistance oriented towards long-term solutions. It is also expected that the need for grant funds to provide this assistance will diminish over time, specifically in the latter stages of the grant performance period.

Employer Support

Information provided in this section will be evaluated predominantly under the ''Local Collaboration and Sustainability'' criteria.

—Describe the specific responsibilities and approaches for developing relationships with and support of area employers to generate a sufficient number of unsubsidized employment opportunities for the target group. Specifically describe how employers will be encouraged to customize employment opportunities to meet work-related needs (e.g., child care, flexible work schedules) of recipients.

—Identify the employers in the local area who have made commitments to the project and describe the types of commitments made (e.g., number and types of jobs, contribution of employer resources for post-hire support services and/or training).

Planned Outcomes

Information provided in this section will be evaluated predominantly under the ''Outcomes'' criteria.

—Identify and justify planned performance for the comprehensive service strategy on the following measures: Number of participants to be placed into unsubsidized employment; average earnings at placement in unsubsidized employment; expected average earnings one year after placement in unsubsidized employment; and cost per placement in unsubsidized employment. In addition, where applicable, for those services supported specifically by WtW competitive grant funds, describe specific process or outcome objectives for those services.

The application may include other measures and planned performance levels as deemed appropriate by the applicant. If these are included, the applicant should briefly describe their relevance to the project.

Implementation Plan

Information provided in this section will be evaluated predominantly under the ''Outcomes'' and ''Innovation'' criteria.

—Identify the critical activities, time frames and responsibilities for effectively implementing the project within the first 60 days after the award of the grant.

—Include an implementation schedule showing the number of participants, enrollments in allowable activities, placements in unsubsidized employment and terminations.

Project Management Plan

Information provided in this section will be evaluated predominantly under the ''Demonstrated Capability'' and ''Innovation'' criteria.

Applicants must be able to document that they have systems capable of satisfying the administrative and grant management requirements for WtW grants as defined in 20 CFR Part 645.

—Include a project organizational chart which identifies the organizations, and staff, with key management responsibilities and the specific responsibilities of each organization;

—Describe the specific experience of the applicant and other key organizations involved in the project in serving individuals with significant barriers to employment. The information should include specific projects or grants, a comparison of the characteristics of individuals served to the target group for this project, and the employment outcomes which were achieved.

—As appropriate, describe how current or former welfare recipients will be used to provide services.

—Describe the procedures which will be used to obtain feedback from participants and other appropriate parties on the responsiveness and effectiveness of the services provided.

Innovation

Information provided in this section will be evaluated predominantly under the ''Innovation'' criteria.

Recipients of WtW competitive grants are expected to use creativity and innovation to help eligible individuals obtain long-term unsubsidized employment and economic self-sufficiency. The application should describe how the proposed approach represents an innovative method for achieving the employment objectives of the project. Proposed strategies should represent an improvement over, or a variation on, approaches that have traditionally been used in the project service area to assist welfare recipients and other low income unemployed individuals.

Grant recipients are also expected to share knowledge which they develop through the use of innovative approaches. Applicants should describe how they will report lessons learned in the course of the grant implementation, and further, describe their plans for disseminating the knowledge they have gained.

Additional Requirements for Community Saturation Projects

Information provided in this section will be evaluated predominantly under the ''Outcomes'' and ''Innovation'' criteria.

—Describe why a project employing a saturation strategy is appropriate for the project service area and target group.

—Describe the feasibility of a saturation strategy for the project service area and target group (i.e., based on available employment opportunities and other factors).

—Identify the local partners who will be involved in implementing the saturation strategy, the services to be provided and the dollar value of the contribution from each.

Appendix A: Instructions for Random Assignment Plan Addendum

Background

The Department of Health and Human Services is charged with the responsibility to conduct a national evaluation of the welfare-to-work (WtW) grants program. The goal of the evaluation is to expand the base of knowledge about effective strategies for moving the least job-ready welfare recipients into unsubsidized employment. Ten to fourteen WtW competitive grant project sites will be selected for an in-depth study of the net impact and cost-effectiveness in moving hard-to-employ recipients into employment. This analysis will rely on both administrative data and, potentially, in-person interviews with program participants. In addition, these sites will participate in a qualitative study of the issues, challenges, and successes associated with implementing and operating WtW programs. This qualitative analysis will rely on on-site interviews with program administrators and staff, administrative data, and potentially, focus groups with WtW participants.

To qualify as a site for the in-depth study, the site must plan to serve at least 450 WtW eligible individuals. Up to five (5) bonus points are available to competitive grant applicants which meet this participant threshold and which are willing to participate in the net impact and cost-effectiveness components of the evaluation. Sites selected to participate in the evaluation will receive additional resources to cover the extra administrative costs associated with participating in the evaluation. Additionally, selected sites will have access to enhanced technical assistance from the evaluation contractor. Finally, the sites will benefit from a high-quality evaluation of their program, as well as the opportunity to have their program showcased nationally to demonstrate innovative techniques for serving hard-to-employ welfare recipients.

What Will Participation in the Net Impact and Cost-Effectiveness Components of the Evaluation Mean for the Selected Sites.

To effectively measure the net impact and cost-effectiveness of specific service strategies, an experimental design involving the random assignment of individuals to either treatment status (receipt of WtW services) or control status (receipt of regular TANF services) will be used to estimate program net impacts. The random assignment approach will also be applied to test impacts among a variety of WtW services.

Since the level of funding available to a particular WtW site will not be sufficient to serve the entire population eligible in that site, the applicant must demonstrate the capacity to design a random assignment study so that no fewer participants will be served by the WtW program than would have been served in the absence of the study. Random assignment will only change the mechanism by which program administrators would otherwise respond to the funding shortfall (e.g., waiting lists, first-come first-serve, priority groups). Nor will random assignment require excluding the control group from services—the control group will be eligible to receive the regular TANF services available to participants in the TANF program.

Application Process

WtW applicants who would like to be considered as net impact and cost-

effectiveness evaluation site should submit an ''Evaluation Addendum'' in addition to their programmatic application.

The addendum should address the following items:

—Appropriateness of site for evaluation purposes. Because of the statistical requirements associated with random assignment, programs selected for the evaluation will need to serve at least 450 participants in this grant cycle (with funding available over three years). Preference may be given to programs that address the areas of interest identified in the SGA and that will be able to be implemented quickly. The application should explain the importance of the program model for learning about effective strategies for hard-to-employ recipients. It also should include evidence of the applicant's understanding of what is required to carry out a net impact evaluation program under the coordination of a contractor, and evidence of the site's commitment to provide the necessary supports and resources to ensure the success of the project.

—Evidence of capacity to participate. Evaluation sites must be willing and able to collect administrative data on participants' experiences and outcomes. The following are specific examples of evaluation site requirements: utilizing staff time to oversee the administration of special data collection forms and reviewing them for completeness; having on staff personnel with knowledge about or experience in data systems management and extraction; utilizing staff time to contact program participants to set up meetings or elicit their cooperation in focus groups; helping to identify current address or additional contact information for participants who cannot be located after program termination; and utilizing management and staff time to meet with evaluation staff for individual and/or group interviews and information exchange. The application should list the ability of the site to participate in these tasks. It also should identify the key individuals who will work on the evaluation along with a short description of the nature of their contribution and the percentage of their time available for the project. There also should be evidence of support from management of the organization for the purposes of research and evaluation. Applicants are encouraged to discuss relevant staff experience with research and evaluation.

—Budget for reimbursement of evaluation costs. Additional grant funds are available to help defray the incremental administrative costs associated with the site's participation in the national evaluation. This may include the costs associated with special data collection and reporting (above that required of all WtW grant recipients), monitoring case status and ensuring that cases receive the services appropriate under the arrangements agreed upon for the evaluation, supporting the evaluation by notifying participants and arranging for meetings between evaluators and WtW participants, and providing liaison between the program and the evaluator as a part of the national evaluation team. Based on past experience, it is estimated that the costs to carry out these special tasks equate to between 1 and 1.5 full time employees (FTE) per year for a mid-range support staff person. WtW applicants applying to be considered as participants in this component of the evaluation should include a budget attachment that includes the costs of evaluation.

Sites that are interested in participating in a random assignment experiment but are unsure whether they meet the criteria are encouraged to submit an application for the bonus points. Efforts will be made to work closely with the selected sites to facilitate participation in the study and to minimize the administrative burden of random assignment.

Appendix B: Definitions of Key Terms

City with Large Concentration of Poverty—Any county that contains an urban center of more than 50,000 people with a poverty rate of greater than 7.5 percent.

Community Saturation Strategy—Projects that propose to serve 100 percent of the WtW eligible population within a designated service area, i.e., the community is completely ''saturated'' with services.

Noncustodial Parent—A parent of a child whose custodial parent is an eligible TANF recipient.

Private Entity—Any organization, public or private, which is neither a PIC nor a political subdivision of a State.

Private Industry Council (PIC)—from Sec. 645.120 of the WtW Regulations—A Private Industry Council established under Section 102 of the Job Training Partnership Act, which performs the functions authorized at Section 103 of the JTPA.

Political Subdivision—A unit of general purpose local government, as provided for in State laws and/or Constitution, which has the power to levy taxes and spend funds and which also has general corporate and police powers.

Rural Area—(1) Any county that does not contain an urban center of more than 50,000 people, and where at least 50 percent of the geographical area of the county has a population density of less than 100 persons per square mile; or (2) in counties where there is an urban center, a rural area within the county that constitutes, or is part of, a distinct rural labor market.

Appendix C: Application for Federal Assistance (Standard Form 424) Budget Information Sheet

Note: In completing the Standard Form 424, the applicant should indicate in Item 11 of the form whether the project is to operate in a city with a large concentration of poverty or in a rural area; identify the EC/EZ included in the project service area, if applicable; and identify any of the areas of interest identified in the announcement which are addressed by the project.

BILLING CODE 4510–30–P

APPLICATION FOR FEDERAL ASSISTANCE

OMB Approval No. 0348-0043

1. TYPE OF SUBMISSION: Application ☐ Construction ☐ Non-Construction / Preapplication ☐ Construction ☐ Non-Construction	2. DATE SUBMITTED	Applicant Identifier
	3. DATE RECEIVED BY STATE	State Application Identifier
	4. DATE RECEIVED BY FEDERAL AGENCY	Federal Identifier

5. APPLICANT INFORMATION

Legal Name:	Organizational Unit:
Address (give city, county, State and zip code):	Name and telephone number of the person to be contacted on matters involving this application (give area code):

6. EMPLOYER IDENTIFICATION NUMBER (EIN):

☐☐-☐☐☐☐☐☐☐

7. TYPE OF APPLICANT: (enter appropriate letter in box) ☐

A. State
B. County
C. Municipal
D. Township
E. Interstate
F. Intermunicipal
G. Special District
H. Independent School Dist.
I. State Controlled Institution of Higher Learning
J. Private University
K. Indian Tribe
L. Individual
M. Profit Organization
N. Other (Specify): _____

8. TYPE OF APPLICATION: ☐ New ☐ Continuation ☐ Revision

If Revision, enter appropriate letter(s) in box(es): ☐ ☐

A. Increase Award B. Decrease Award C. Increase Duration
D. Decrease Duration Other (specify):

_____

9. NAME OF FEDERAL AGENCY:

10. CATALOG OF FEDERAL DOMESTIC ASSISTANCE NUMBER:

1 7 - 2 5 3

TITLE: Welfare-to-Work Grants

11. DESCRIPTIVE TITLE OF APPLICANT'S PROJECT:

12. AREAS AFFECTED BY PROJECT (cities, counties, States, etc.):

13. PROPOSED PROJECT:		14. CONGRESSIONAL DISTRICTS OF:	
Start Date	Ending Date	a. Applicant	b. Project

15. ESTIMATED FUNDING:		
a. Federal	$	.00
b. Applicant	$	.00
c. State	$	.00
d. Local	$	.00
e. Other	$	.00
f. Program Income	$	.00
g. TOTAL	$	.00

16. IS APPLICATION SUBJECT TO REVIEW BY STATE EXECUTIVE ORDER 12372 PROCESS?

a. YES. THIS PREAPPLICATION/APPLICATION WAS MADE AVAILABLE TO THE STATE EXECUTIVE ORDER 12372 PROCESS FOR REVIEW ON

DATE _____

b. NO. ☐ PROGRAM IS NOT COVERED BY E.O. 12372

☐ OR PROGRAM HAS NOT BEEN SELECTED BY STATE FOR REVIEW

17. IS THE APPLICANT DELINQUENT ON ANY FEDERAL DEBT?

☐ Yes If "Yes," attach an explanation. ☐ No

18. TO THE BEST OF MY KNOWLEDGE AND BELIEF, ALL DATA IN THIS APPLICATION/PREAPPLICATION ARE TRUE AND CORRECT. THE DOCUMENT HAS BEEN DULY AUTHORIZED BY THE GOVERNING BODY OF THE APPLICANT AND THE APPLICANT WILL COMPLY WITH THE ATTACHED ASSURANCES IF THE ASSISTANCE IS AWARDED.

a. Typed Name of Authorized Representative	b. Title	c. Telephone number
d. Signature of Authorized Representative		e. Date Signed

Previous Editions Not Usable

Standard Form 424 (REV 4-88)
Prescribed by OMB Circular A-102

Authorized for Local Reproduction

PART II - BUDGET INFORMATION

SECTION A - Budget Summary by Categories

	(A)	(B)	(C)
1. Personnel			
2. Fringe Benefits (Rate %)			
3. Travel			
4. Equipment			
5. Supplies			
6. Contractual			
7. Other			
8. Total, Direct Cost (Lines 1 through 7)			
9. Indirect Cost (Rate %)			
10. Training Cost/Stipends			
11. TOTAL Funds Requested (Lines 8 through 10)			

SECTION B - Cost Sharing/ Match Summary (if appropriate)

	(A)	(B)	(C)
1. Cash Contribution			
2. In-Kind Contribution			
3. TOTAL Cost Sharing / Match (Rate %)			

NOTE: Use Column A to record funds requested for the initial period of performance (i.e. 12 months, 18 months, etc.); Column B to record changes to Column A (i.e. requests for additional funds or line item changes; and Column C to record the totals (A plus B).

(INSTRUCTIONS ON BACK OF FORM)

INSTRUCTIONS FOR PART II - BUDGET INFORMATION

SECTION A - Budget Summary by Categories

1. **Personnel:** Show salaries to be paid for project personnel.

2. **Fringe Benefits**: Indicate the rate and amount of fringe benefits.

3. **Travel**: Indicate the amount requested for staff travel. Include funds to cover at least one trip to Washington, DC for project director or designee.

4. **Equipment**: Indicate the cost of non-expendable personal property that has a useful life of more than one year with a per unit cost of $5,000 or more.

5. **Supplies**: Include the cost of consumable supplies and materials to be used during the project period.

6. **Contractual**: Show the amount to be used for (1) procurement contracts (except those which belong on other lines such as supplies and equipment); and (2) sub-contracts/grants.

7. **Other**: Indicate all direct costs not clearly covered by lines 1 through 6 above, including consultants.

8. **Total, Direct Costs**: Add lines 1 through 7.

9. **Indirect Costs**: Indicate the rate and amount of indirect costs. Please include a copy of your negotiated Indirect Cost Agreement.

10. **Training /Stipend Cost:** (If allowable)

11. **Total Federal funds Requested**: Show total of lines 8 through 10.

SECTION B - Cost Sharing/Matching Summary

Indicate the actual rate and amount of cost sharing/matching when there is a cost sharing/matching requirement. Also include percentage of total project cost and indicate source of cost sharing/matching funds, i.e. other Federal source or other Non-Federal source.

NOTE:

PLEASE INCLUDE A DETAILED COST ANALYSIS OF EACH LINE ITEM.

PROJECT SYNOPSIS FORM

U.S. DEPARTMENT OF LABOR
Employment and Training Administration

OMB No. 1205-0387
Expires: 06/30/98

Project Applicant Name:

Type of Organization:
____ PIC
____ Political Subdivision (City/County)
____ Private Entity
In conjunction with (identify specific PIC or Political Subdivision):

Applicant Contact:
Title:
Address:
Telephone: ( ) _____
E-mail address: _____
Fax: ( ) _____

Project Service Area (Counties or area to be served):
City ____
Rural Area ____
EZ/EC ____

Funds Requested: $ _____
Period of Performance: From _____
To _____

AREAS OF SPECIAL INTEREST
(Please indicate relevant page numbers in project narrative on the line provided for all areas that apply)

Target Populations

____ Noncustodial Parents
____ Learning Disabled Individuals
____ Substance Abusers
____ Public Housing Residents

Key Service Strategies

____ Expanded/accessible Transportation Services
____ Expanded/accessible Child Care Services
____ Integrated Work and Learning Skills Development
____ Family-focused Assistance
____ Job Creation/Self-Employment
____ Non-traditional Occupations for Women

Integration Strategies

____ Proactive Employer Involvement
____ Integration with Child and other Family Assistance Services
____ Integration with Workforce Development and Welfare Systems
____ Community Saturation

OUTCOME MEASURES

Number of Participants: _____
Number of Noncustodial Parents: _____
Number of Placements (unsubsidized): _____
Cost Per Placement (unsubsidized): $ _____
Expected Average Wage at Placement: $ _____
Expected Average Wage One Year After Placement: $ _____

Notes (include descriptors of key innovative elements):

Persons are not required to respond to this collection of information unless it displays a current valid OMB control number. Respondents obligation to reply to these reporting requirements are required to obtain or retain benefits (20 CFR 645). Public reporting burden for this collection of information is estimated to average 20 hours per response, including time for reviewing instructions, searching existing data sources, gathering and maintaining the data needed, and completing and reviewing the collection of information. Send comments regarding this burden estimate or any other aspect of this collection of information, including suggestions for reducing this burden, to the US Department of Labor, Office of Welfare-to-Work, Room C-4524, Washington, D.C. 20210 (Paperwork Reduction Project 1205-0387).

April 1998 ETA Form 9070

[FR Doc. 98–9950 Filed 4–14–98; 8:45 am]

BILLING CODE 4510–30–C

DEPARTMENT OF LABOR

Employment and Training Administration

Job Training Partnership Act: Indian and Native American Employment and Training Council

AGENCY: Employment and Training Administration, Labor.

ACTION: Notice of meeting.

SUMMARY: Pursuant to section 10(a)(2) of the Federal Advisory Committee Act (Pub. L. 92–463), as amended, and section 401(h)(1) of the Job Training Partnership Act, as amended [9 U.S.C. 1671(h)(1)], notice is hereby given of a meeting of the Native American Employment and Training Council.

TIME AND DATE: The meeting will begin at 1 p.m. PDT on Thursday, May 14, 1998, and continue until close of business that day. The meeting will reconvene at 9 a.m. PDT on Friday, May 15, 1998, and adjourn at 5 p.m. PDT on that day. From 3 p.m. to 5 p.m. PDT on May 14 will be reserved for participation and presentation by members of the public.

PLACE: The Terrace Rooms of the Ridpath Hotel, West 515 Sprague Avenue, Spokane, Washington 99204–0367. The telephone number of the Ridpath is (509) 838–2711.

STATUS: The meeting will be open to the public.

MATTERS TO BE CONSIDERED: The agenda will focus on the following topics: (1) Status of the Program Year 1997 Partnership Plan; (2) progress of the evaluation of the section 401 program; (3) progress of the performance measures workgroup; (4) status of technical assistance and training provision for Program Year 1998; (5) status of Indian and Native American Welfare-to-Work program implementation; and (6) status of pending and proposed job training legislation.

FOR FURTHER INFORMATION CONTACT: Mr. Thomas M. Dowd, Chief, Division of Indian and Native American Programs, Employment and Training Administration, U.S. Department of Labor, Room N–4641, 200 Constitution Avenue, NW, Washington, DC 20210. Telephone: (202) 219–8502 ext 119 (VOICE) or (202) 326–2577 (TDD) (these are not toll-free numbers).

Signed at Washington, DC, this 10th day of April, 1998.

Anna W. Goddard,

Director, Office of National Programs.

[FR Doc. 98–9951 Filed 4–14–98; 8:45 am]

BILLING CODE 4510–30–P

NATIONAL TRANSPORTATION SAFETY BOARD

Sunshine Act Meeting

TIME AND DATE: 9:30 a.m., Tuesday, April 21, 1998.

PLACE: NTSB Board Room, 5th Floor, 490 L'Enfant Plaza, SW., Washington, DC 20594.

STATUS: Open.

MATTERS TO BE CONSIDERED:

6832A Highway Major Accident Report—Multiple Vehicle Crossover Accident, Slinger, Wisconsin, February 12, 1997.

NEWS MEDIA CONTACT: Telephone: (202) 314–6100.

FOR MORE INFORMATION CONTACT: Rhonda Underwood, (202) 314–6065.

Dated: April 10, 1998.

Rhonda Underwood,

Federal Register Liaison Officer.

[FR Doc. 98–10041 Filed 4–10–98; 4:25 pm]

BILLING CODE 7533–01–M

NUCLEAR REGULATORY COMMISSION

Atomic Safety and Licensing Board

[Docket No. IA 97–068 and ASLBP No. 97–731–01–EA]

In the Matter of: Aharon Ben-Haim, Ph.D., Upper Montclair, New Jersey; Order Superseding Order Prohibiting Involvement in NRC-Licensed Activities (Effective Immediately); Appointment of Special Assistant

April 9, 1998.

Pursuant to 10 CFR 2.722(a)(1) of the Commission's regulations, the Atomic Safety and Licensing Board in this enforcement proceeding, after consultation with Judge B. Paul Cotter, Jr., Chief Administrative Judge of the Atomic Safety and Licensing Board Panel, has appointed Administrative Judge Harry Rein to serve as a technical interrogator in this proceeding.

Judge Rein has expertise as a medical doctor. He will sit with the Atomic Safety and Licensing Board to hear the presentations and cross-examination by the parties of all witnesses and will have authority to examine witnesses to ensure that the record is as complete as possible.

This appointment is subject to the notice and disqualification provisions described in 10 CFR 2.704.

All correspondence, documents and other materials shall be filed with Judge Rein, as well as with the members of the Atomic Safety and Licensing Board. Judge Rein's address is as follows: Administrative Judge Harry Rein, 1877 Wingfield Drive, Longwood, FL 32779.

Dated at: Rockville, Maryland, April 9, 1998.

For the Atomic Safety and Licensing Board.

Charles Bechhoefer,

Chairman, Administrative Judge.

[FR Doc. 98–10000 Filed 4–14–98; 8:45 am]

BILLING CODE 7590–01–P

NUCLEAR REGULATORY COMMISSION

Atomic Safety and Licensing Board

[Docket No. IA 97–070 and ASLBP No. 98–734–01–EA]

[In the Matter of: Magdy Elamir, M.D., Newark, New Jersey; Order Superseding Order Prohibiting Involvement in NRC-Licensed Activities (Effective Immediately); Appointment of Special Assistant

April 9, 1998.

Pursuant to 10 CFR 2.722(a)(1) of the Commission's regulations, the Atomic Safety and Licensing Board in this enforcement proceeding, after consultation with Judge B. Paul Cotter, Jr., Chief Administrative Judge of the Atomic Safety and Licensing Board Panel, has appointed Administrative Judge Harry Rein to serve as a technical interrogator in this proceeding.

Judge Rein has expertise as a medical doctor. He will sit with the Atomic Safety and Licensing Board to hear the presentations and cross-examination by the parties of all witnesses and will have authority to examine witnesses to ensure that the record is as complete as possible.

This appointment is subject to the notice and disqualification provisions described in 10 CFR 2.704.

All correspondence, documents and other materials shall be filed with Judge Rein, as well as with the members of the Atomic Safety and Licensing Board. Judge Rein's address is as follows: Administrative Judge Harry Rein, 1877 Wingfield Drive, Longwood, FL 32779.

Dated at: Rockville, Maryland, April 9, 1998.

For the Atomic Safety and Licensing Board.

Charles Bechhoefer,

Chairman, Administrative Judge.

[FR Doc. 98–9999 Filed 4–14–98; 8:45 am]

BILLING CODE 7590–01–P

NUCLEAR REGULATORY COMMISSION

[Docket No. 40–8968–ML; ASLBP No. 95–706–01–ML]

Hydro Resources, Inc.; Notice of Reconstitution

Pursuant to the authority contained in 10 CFR 2.721 and 2.1207, the Presiding Officer in the captioned Subpart L proceeding is hereby replaced by appointing Administrative Judge Peter B. Bloch as Presiding Officer in place of Chief Administrative Judge B. Paul Cotter, Jr.

All correspondence, documents and other material shall be filed with the Presiding Officer in accordance with 10 CFR 2.1203 (1997). The address of the new Presiding Officer is: Administrative Judge Peter B. Bloch, Atomic Safety and Licensing Board Panel, U.S. Nuclear Regulatory Commission, Washington, D.C. 20555.

Issued at Rockville, Maryland, this 9th day of April 1998.

B. Paul Cotter, Jr.,

Chief Administrative Judge, Atomic Safety and Licensing Board Panel.

[FR Doc. 98–9996 Filed 4–14–98; 8:45 am]

BILLING CODE 7590–01–P

NUCLEAR REGULATORY COMMISSION

Illinois Power Company; Notice of Withdrawal of Application for Exemption to 10 CFR 50, Appendix A, General Design Criterion 17 and Amendment to Facility Operating License

[Docket No. 50–461]

The U.S. Nuclear Regulatory Commission (the Commission) has granted the request of Illinois Power Company (the licensee) to withdraw its July 22, 1997, application for proposed exemption to 10 CFR Part 50, Appendix A, General Design Criterion (GDC) 17, ''Electric Power Systems,'' and amendment to Facility Operating License No. NPF–62 for the Clinton Power Station, located in DeWitt County, Illinois.

The proposed exemption and amendment would have temporarily permitted plant operation with one fully qualified offsite circuit and one circuit that does not strictly conform to the capacity and capability requirements of GDC–17.

The Commission had previously issued an environmental assessment and finding of no significant impact published in the **Federal Register** on July 25, 1997 (62 FR 40123). However, by letter dated September 30, 1997, the licensee withdrew the proposed change.

For further details with respect to this action, see the application for exemption and amendment dated July 22, 1997, supplemented July 23, August 1, and August 12, 1997, and the licensee's letter dated September 30, 1997, which withdrew the application for exemption and license amendment. The above documents are available for public inspection at the Commission's Public Document Room, the Gelman Building, 2120 L Street, NW., Washington, DC, and at the local public document room located at the Vespasian Warner Public Library, 310 N. Quincy Street, Clinton, IL 61727.

Dated at Rockville, Maryland, this 8th day of April 1998.

For the Nuclear Regulatory Commission.

Jon B. Hopkins,

Senior Project Manager, Project Directorate III–3, Division of Reactor Projects—III/IV, Office of Nuclear Reactor Regulation.

[FR Doc. 98–9995 Filed 4–14–98; 8:45 am]

BILLING CODE 7590–01–P

NUCLEAR REGULATORY COMMISSION

[Docket No. 50–146]

Saxton Nuclear Experimental Corporation, GPU Nuclear, Inc.; Notice of Issuance of Environmental Assessment and Finding of No Significant Impact; Saxton Nuclear Experimental Facility

The U.S. Nuclear Regulatory Commission (the Commission) is considering the issuance of a license amendment to the Saxton Nuclear Experimental Corporation (SNEC) and GPU Nuclear, Inc. (the licensees) that would allow decommissioning of the Saxton Nuclear Experimental Facility (SNEF) located near Saxton, Pennsylvania.

Description of Proposed Action

The proposed action is immediate dismantlement (the DECON alternative) of the SNEF. The licensees have requested an amendment to Amended Facility License No. DPR–4 that would allow decommissioning of the SNEF by changing the license and technical specifications to (1) accommodate decommissioning activities at the SNEF, (2) establish specific technical specification controls over decommissioning activities, (3) establish limiting conditions for performing decommissioning activities, (4) extend exclusion area controls to include the SNEF Decommissioning Support Facility, (5) establish requirements for a Radiological Environmental Monitoring Program and an Off-Site Dose Calculation Manual, and (6) establish requirements for Technical and Independent Safety Reviews.

Built in 1960–62 under a license to SNEC, the facility was operated from 1962 to 1972 primarily for research and training. In 1972, the SNEF was shut down and placed in a condition equivalent to what is now defined by the NRC as ''SAFSTOR'' (safe storage) and its operating license was changed to possession-only status. In 1972, all fuel, the control rod blades, and the superheated steam test loop were removed from the SNEF containment vessel (CV) and returned to the U.S. Atomic Energy Commission at its Savannah River Plant in South Carolina. After the fuel was removed, equipment, most tanks, and piping external to the CV were also removed. Buildings and structures that supported reactor operations were partially decontaminated in 1972–74. Final decontamination of reactor support structures and buildings was done in 1987–89. This process included decontamination of the Control and Auxiliary Building, Radioactive Waste Disposal Facility, Yard Pipe Tunnel, and Filled Drum Storage Bunker, as well as removal of the Refueling Water Storage Tank. After acceptance of the final release survey by the NRC, these buildings were demolished in 1992. The Saxton Soil Remediation Project was completed in November 1994 which removed and shipped to a licensed radioactive waste disposal facility soil that was located within the site perimeter and found to be contaminated with radioactive material.

In preparation for release of the site for unrestricted use, the licensees now propose to decontaminate and dismantle the SNEF CV; the concrete shield wall located around the northwest and northeast quadrants of the CV; the tunnel sections that are immediately adjacent to the outer circumference of the CV; and remaining portions of the septic system, weirs, and associated underground piping. These structures contain known or suspected residual radioactive material.

Summary of the Environmental Assessment

The purpose of decommissioning a nuclear facility is to remove the facility safely from service, and to reduce residual radioactivity at the site to levels that permit the license granted by the NRC to be terminated.

The NRC staff has reviewed the licensees' application and the SNEC Decommissioning Environmental Report prepared in accordance with 10 CFR 51.53(d). The staff also referred to the SNEC Facility Updated Safety Analysis Report, Revisions 0, 1, and 2 and the SNEC Facility Decommissioning Quality Assurance Plan. To document its review, the staff has prepared an environmental assessment (EA) which examined decommissioning alternatives, non-radiological and radiological impacts of decommissioning, and effects of postulated radiological accidents during decommissioning. The alternatives available for decommissioning—DECON, ENTOMB, SAFSTOR, and no action—are evaluated and discussed in the ''Final Generic Environmental Impact Statement on Decommissioning of Nuclear Facilities,'' NUREG–0586, dated August 1988 (GEIS). Based on its review of the licensees' application and plans for decommissioning described in the Post Shutdown Decommissioning Activities Report (PSDAR), the staff has determined that the environmental impacts, both radiological and nonradiological, associated with the decommissioning of the SNEF, are bounded by the impacts evaluated by the GEIS and have been adequately evaluated by the licensees. The staff also finds that the proposed decommissioning of the SNEF complies with 10 CFR Part 50, Appendix I, and 10 CFR Part 20.

Finding of No Significant Impact

The staff has reviewed the licensees' application for license amendment and environmental report in accordance with the requirements of 10 CFR Part 51. Based upon the EA, the staff concluded that there are no significant environmental impacts associated with the proposed action and that the proposed action will not have a significant effect on the quality of the human environment. Therefore, the Commission has determined, pursuant to 10 CFR 51.31, not to prepare an environmental impact statement.

For further details with respect to this action see (1) the application for license amendment dated November 25, 1996, as supplemented on May 30, June 4 and 16, August 21 and September 16, 1997, and February 3 and 9, 1998, (2) the SNEC Decommissioning Environmental Report submitted on April 17, 1996, and the licensees' response to Commission questions about the environmental report dated July 18, 1996, and March 3 and 31, 1998, (3) the SNEC Facility Updated Safety Analysis Report, Revision 0, submitted on October 25, 1996, Revision 1, submitted on August 21, 1997, and Revision 2, submitted on February 3, 1998, (4) the SNEC Facility Decommissioning Quality Assurance Plan submitted by letter dated November 8, 1996, as supplemented on May 30, 1997, and February 3 and 9, 1998, (5) the PSDAR (originally submitted as the SNEF Decommissioning Plan) dated February 1996, which was submitted on February 16, 1996, as supplemented on July 18, 1996, and (6) the EA dated March 1998. These documents are available for public inspection at the NRC Public Document Room, the Gelman Building, 2120 L Street, NW, Washington, D.C. 20003, and at the Local Public Document Room for the SNEF at the Saxton Community Library, Front Street, Saxton, Pennsylvania 16678. Single copies of the EA may be obtained from Alexander Adams Jr., Senior Project Manager, Office of Nuclear Reactor Regulation, U.S. Nuclear Regulatory Commission, M.S. O–11–B–20, Washington, D.C. 20555.

Dated at Rockville, Maryland, this 9th day of April 1998.

For the Nuclear Regulatory Commission.

Marvin M. Mendonca,

Acting Director, Non-Power Reactors and Decommissioning Project Directorate, Division of Reactor Program Management, Office of Nuclear Reactor Regulation.

[FR Doc. 98–9994 Filed 4–14–98; 8:45 am]

BILLING CODE 7590–01–P

NUCLEAR REGULATORY COMMISSION

Advisory Committee on Nuclear Waste; Revised

The agenda for the 100th meeting of the Advisory Committee on Nuclear Waste (ACNW) scheduled to be held on April 21–23, 1998, 11545 Rockville Pike, Rockville, Maryland, has been revised. On Thursday, April 23 the Acting Director, Office of Civilian Radioactive Waste Management, DOE, will provide an overview of DOE high level waste activities. In addition, Ms. C. Hanlon, DOE will update the Committee on site characterization activities at Yucca Mountain.

All other items pertaining to this meeting remains the same as published in the **Federal Register** on Monday, April 6, 1998 (63 FR 16831).

Further information regarding this meeting can be obtained by contacting Mr. Richard K. Major, Chief, Nuclear Waste Branch (telephone 301/415–7366), between 8:00 A.M. and 5:00 P.M. EDT.

ACNW meeting agenda, meeting transcripts, and letter reports are available for downloading or reviewing on the internet at http://www.nrc.gov/ACRSACNW.

Dated: April 9, 1998.

Andrew L. Bates,

Advisory Committee Management Officer.

[FR Doc. 98–9997 Filed 4–14–98; 8:45 am]

BILLING CODE 7590–01–P

NUCLEAR REGULATORY COMMISSION

[Docket No. 50–133]

Pacific Gas and Electric Company, Humboldt Bay Power Plant; Notice of Public Meeting

The NRC will conduct a public meeting at the Eureka Inn, 518 7th Street, Eureka, California, on April 29, 1998, to discuss plans developed by Pacific Gas and Electric Company (PG&E, the Humboldt Bay Power Plant licensee) to decommission the Humboldt Bay Power Plant located near Eureka, California. The meeting will begin at 7:00 p.m. and be chaired by Mr. Stan Dixon, 1st District Supervisor, Humboldt County Board of Supervisors. The meeting will include a short presentation by the NRC staff on the decommissioning process and NRC programs for monitoring decommissioning activities, with attention being given to the licensee's updated Post-Shutdown Decommissioning Activities Report (PSDAR) dated February 27, 1998. There will also be a presentation by PG&E on their planned decommissioning activities, and there will be an opportunity for members of the public to make comments and question the NRC staff and PG&E representatives. The meeting will be transcribed.

The licensee's update to the PSDAR provides a short discussion of the plant history, and a description and schedule of planned decommissioning activities. The PSDAR update also comments briefly on anticipated decommissioning costs and environmental impacts.

The PSDAR update is available for public inspection at the local public document room, located at the Humboldt County Library, 1313 3rd Street, Eureka, CA 95501, and the

Commission Public Document Room, 2120 L Street, NW., Washington, D.C. 20037. The NRC document accession number is 9803040224.

For more information, contact Mr. Louis L. Wheeler, Senior Project Manger, Non-Power Reactors and Decommissioning Project Directorate, Division of Reactor Program Management, Office of Nuclear Reactor Regulation, U.S. Nuclear Regulatory Commission, Washington DC, 20555–0001, telephone number (301) 415–1444.

Dated at Rockville, Maryland, this 9th day of April 1998.

For the Nuclear Regulatory Commission.

Marvin M. Mendonca,

Acting Director, Non-Power Reactors and Decommissioning Project Directorate, Division of Reactor Program Management, Office of Nuclear Reactor Regulation.

[FR Doc. 98–9993 Filed 4–14–98; 8:45 am]

BILLING CODE 7590–01–P

NUCLEAR REGULATORY COMMISSION

Advisory Committee on Reactor Safeguards; Meeting Notice

In accordance with the purposes of Sections 29 and 182b. of the Atomic Energy Act (42 U.S.C. 2039, 2232b), the Advisory Committee on Reactor Safeguards will hold a meeting on April 30–May 2, 1998, in Conference Room T–2B3, 11545 Rockville Pike, Rockville, Maryland. The date of this meeting was previously published in the **Federal Register** on Thursday, November 20, 1997 (62 FR 62079).

Thursday, April 30, 1998

8:30 A.M.–8:45 A.M.: Opening Remarks by the ACRS Chairman (Open)—The ACRS Chairman will make opening remarks regarding conduct of the meeting.

8:45 A.M.–10:45 A.M.: Human Performance and Reliability Plan (Open)—The Committee will hear presentations by and hold discussions with representatives of the NRC staff regarding the revised Human Performance and Reliability Plan.

11:00 A.M.–12:30 P.M.: Elevation of the Core Damage Frequency (CDF) to a Fundamental Safety Goal and Proposed Modifications to the Safety Goal Policy Statement (Open)—The Committee will hear presentations by and hold discussions with representatives of the NRC staff regarding elevation of CDF to a fundamental Safety Goal and proposed modifications to the Safety Goal Policy Statement.

1:30 P.M.–3:00 P.M.: HASCAL Atmospheric Dispersion Dose Assessment Computer Code (Open)—The Committee will hear presentations by and hold discussions with representatives of the Oak Ridge National Laboratory regarding the HASCAL Atmospheric Dispersion Dose Assessment Computer Code, including a demonstration of the software using a test of simulated conditions.

3:15 P.M.–4:45 P.M.: NUREG/CR–6523, Probabilistic Accident Consequences Uncertainty Analysis (Open)—The Committee will hear presentations by and hold discussions with representatives of the NRC staff and its contractors regarding the Probabilistic Accident Consequences Uncertainty Analysis.

5:00 P.M.–7:00 P.M.: Preparation of ACRS Reports (Open)—The Committee will discuss proposed ACRS reports on matters considered during this meeting.

During this meeting, the Committee will also discuss a proposed ACRS report on the NRC Safety Research Program and a white paper on ACRS views regarding fire protection issues.

Friday, May 1, 1998

8:30 A.M.–8:35 A.M.: Opening Remarks by the ACRS Chairman (Open)—The ACRS Chairman will make opening remarks regarding conduct of the meeting.

8:35 A.M.–10:15 A.M.: Severe Accident Mitigation Design Alternatives (Open)—The Committee will hear presentations by and hold discussions with representatives of the NRC staff regarding Section 7.2, ''Severe Accident Mitigation Design Alternatives,'' of the draft NUREG–1555, ''Standard Review Plans for Environmental Reviews of Nuclear Power Plants.''

10:30 A.M.–11:15 A.M.: Proposed Final Standard Review Plan (SRP) Section and Regulatory Guide for Risk-Informed Inservice Inspection (ISI) (Open)—The Committee will hear presentations by and hold discussions with representatives of the NRC staff regarding changes made to the SRP Section and associated Regulatory Guide for risk-informed ISI of piping at nuclear plants.

11:15 A.M.–12:15 P.M.: Use of Dynamic Benchmarking for Preserving Thermal-Hydraulic Code Test Data (Open)—The Committee will hear presentations by and hold discussions with Dr. Robert Henry, Fauske & Associates, Inc., regarding use of the Dynamic Benchmarking concept to preserve thermal-hydraulic code test data.

1:15 P.M.—2:45 P.M.: Proposed Final Amendment to 10 CFR Part 55, ''Initial Licensed Operator Examination Requirements'' (Open)—The Committee will hear presentations by and hold discussions with representatives of the NRC staff regarding the proposed final amendment to 10 CFR Part 55.

2:45 P.M.—3:15 P.M.: Future ACRS Activities (Open)—The Committee will discuss the recommendations of the Planning and Procedures Subcommittee regarding items proposed for consideration by the full Committee during future meetings.

3:15 P.M.—3:30 P.M.: Reconciliation of ACRS Comments and Recommendations (Open)—The Committee will discuss responses from the NRC Executive Director for Operations (EDO) to comments and recommendations included in recent ACRS reports. The EDO responses are expected prior to the meeting.

3:45 P.M.—7:00 P.M.: Preparation of ACRS Reports (Open)—The Committee will continue its discussion of proposed ACRS reports on matters considered during this meeting.

Saturday, May 2, 1998

8:30 A.M.—9:00 A.M.: Report of the Planning and Procedures Subcommittee (Open/Closed)—The Committee will hear a report of the Planning and Procedures Subcommittee on matters related to the conduct of ACRS business, and organizational and personnel matters relating to the ACRS.

[Note: A portion of this session may be closed to discuss organizational and personnel matters that relate solely to the internal personnel rules and practices of this Advisory Committee, and information the release of which would constitute a clearly unwarranted invasion of personal privacy.]

9:00 A.M.—3:30 P.M. (12:00—12:45 P.M. Lunch): Preparation of ACRS Reports (Open)—The Committee will continue its discussion of proposed ACRS reports on matters considered during this meeting.

3:30 P.M.—4:00 P.M.: Miscellaneous (Open)—The Committee will discuss matters related to the conduct of Committee activities and matters and specific issues that were not completed during previous meetings, as time and availability of information permit.

Procedures for the conduct of and participation in ACRS meetings were published in the **Federal Register** on September 4, 1997 (62 FR 46782). In accordance with these procedures, oral or written views may be presented by members of the public, including representatives of the nuclear industry. Electronic recordings will be permitted only during the open portions of the meeting and questions may be asked only by members of the Committee, its consultants, and staff. Persons desiring to make oral statements should notify

Mr. Sam Duraiswamy, Chief of the Nuclear Reactors Branch, at least five days before the meeting, if possible, so that appropriate arrangements can be made to allow the necessary time during the meeting for such statements. Use of still, motion picture, and television cameras during this meeting may be limited to selected portions of the meeting as determined by the Chairman. Information regarding the time to be set aside for this purpose may be obtained by contacting the Chief of the Nuclear Reactors Branch prior to the meeting. In view of the possibility that the schedule for ACRS meetings may be adjusted by the Chairman as necessary to facilitate the conduct of the meeting, persons planning to attend should check with the Chief of the Nuclear Reactors Branch if such rescheduling would result in major inconvenience.

In accordance with Subsection 10(d) Public Law 92–463, I have determined that it is necessary to close portions of this meeting noted above to discuss matters that relate solely to the internal personnel rules and practices of this Advisory Committee per 5 U.S.C. 552b(c)(2), and to discuss information the release of which would constitute a clearly unwarranted invasion of personal privacy per 5 U.S.C. 552b(c)(6).

Further information regarding topics to be discussed, whether the meeting has been canceled or rescheduled, the Chairman's ruling on requests for the opportunity to present oral statements and the time allotted therefor, can be obtained by contacting Mr. Sam Duraiswamy, Chief of the Nuclear Reactors Branch (telephone 301/415–7364), between 7:30 A.M. and 4:l5 P.M. EDT.

ACRS meeting agenda, meeting transcripts, and letter reports are available for downloading or reviewing on the internet at http://www.nrc.gov/ACRSACNW.

Dated: April 9, 1998.

Andrew L. Bates,

Advisory Committee Management Officer.

[FR Doc. 98–10001 Filed 4–14–98; 8:45 am]

BILLING CODE 7590–01–P

NUCLEAR REGULATORY COMMISSION

Advisory Committee on Reactor Safeguards Subcommittee Meeting on Planning and Procedures; Notice of Meeting

The ACRS Subcommittee on Planning and Procedures will hold a meeting on April 29, 1998, Room T–2B1, 11545 Rockville Pike, Rockville, Maryland.

The entire meeting will be open to public attendance, with the exception of a portion that may be closed pursuant to 5 U.S.C. 552b(c) (2) and (6) to discuss organizational and personnel matters that relate solely to internal personnel rules and practices of ACRS, and information the release of which would constitute a clearly unwarranted invasion of personal privacy.

The agenda for the subject meeting shall be as follows:

Wednesday, April 29, 1998—1:30 p.m. until 3:00 p.m.

The Subcommittee will discuss proposed ACRS activities and related matters. It may also discuss the qualifications of candidates for appointment to the ACRS. The purpose of this meeting is to gather information, analyze relevant issues and facts, and to formulate proposed positions and actions, as appropriate, for deliberation by the full Committee.

Oral statements may be presented by members of the public with the concurrence of the Subcommittee Chairman; written statements will be accepted and made available to the Committee. Electronic recordings will be permitted only during those portions of the meeting that are open to the public, and questions may be asked only by members of the Subcommittee, its consultants, and staff. Persons desiring to make oral statements should notify the cognizant ACRS staff person named below five days prior to the meeting, if possible, so that appropriate arrangements can be made.

Further information regarding topics to be discussed, the scheduling of sessions open to the public, whether the meeting has been canceled or rescheduled, the Chairman's ruling on requests for the opportunity to present oral statements, and the time allotted therefor can be obtained by contacting the cognizant ACRS staff person, Dr. John T. Larkins (telephone: 301/415–7360) between 7:30 a.m. and 4:15 p.m. (EDT). Persons planning to attend this meeting are urged to contact the above named individual one or two working days prior to the meeting to be advised of any changes in schedule, etc., that may have occurred.

Dated: April 9, 1998

Noel F. Dudley,

Acting Chief, Nuclear Reactors Branch.

[FR Doc. 98–9998 Filed 4–14–98; 8:45 am]

BILLING CODE 7590–01–P

PENSION BENEFIT GUARANTY CORPORATION

Interest Assumption for Determining Variable-Rate Premium; Interest on Late Premium Payments; Interest on Underpayments and Overpayments of Single-Employer Plan Termination Liability and Multiemployer Withdrawal Liability; Interest Assumptions for Multiemployer Plan Valuations Following Mass Withdrawal

AGENCY: Pension Benefit Guaranty Corporation.

ACTION: Notice of interest rates and assumptions.

SUMMARY: This notice informs the public of the interest rates and assumptions to be used under certain Pension Benefit Guaranty Corporation regulations. These rates and assumptions are published elsewhere (or are derivable from rates published elsewhere), but are collected and published in this notice for the convenience of the public. Interest rates are also published on the PBGC's home page (http://www.pbgc.gov).

DATES: The interest rate for determining the variable-rate premium under part 4006 applies to premium payment years beginning in April 1998. The interest assumptions for performing multiemployer plan valuations following mass withdrawal under part 4281 apply to valuation dates occurring in May 1998. The interest rates for late premium payments under part 4007 and for underpayments and overpayments of single-employer plan termination liability under part 4062 and multiemployer withdrawal liability under part 4219 apply to interest accruing during the second quarter (April through June) of 1998.

FOR FURTHER INFORMATION CONTACT: Harold J. Ashner, Assistant General Counsel, Office of the General Counsel, Pension Benefit Guaranty Corporation, 1200 K Street, NW., Washington, DC 20005, 202–326–4024. (For TTY/TDD users, call the Federal relay service toll-free at 1–800–877–8339 and ask to be connected to 202–326–4024.)

SUPPLEMENTARY INFORMATION:

Variable-Rate Premiums

Section 4006(a)(3)(E)(iii)(II) of the Employee Retirement Income Security Act of 1974 (ERISA) and § 4006.4(b)(1) of the PBGC's regulation on Premium Rates (29 CFR part 4006) prescribe use of an assumed interest rate in determining a single-employer plan's variable-rate premium. The rate is the ''applicable percentage'' (described in the statute and the regulation) of the annual yield on 30-year Treasury

securities for the month preceding the beginning of the plan year for which premiums are being paid (the ''premium payment year''). The yield figure is reported in Federal Reserve Statistical Releases G.13 and H.15.

For plan years beginning before July 1, 1997, the applicable percentage of the 30-year Treasury yield was 80 percent. The Retirement Protection Act of 1994 (RPA) amended ERISA section 4006(a)(3)(E)(iii)(II) to change the applicable percentage to 85 percent, effective for plan years beginning on or after July 1, 1997. (The amendment also provides for a further increase in the applicable percentage—to 100 percent—when the Internal Revenue Service adopts new mortality tables for determining current liability.)

The assumed interest rate to be used in determining variable-rate premiums for premium payment years beginning in April 1998 is 5.06 percent (*i.e.*, 85 percent of the 5.95 percent yield figure for March 1998).

(Under section 774(c) of the RPA, the amendment to the applicable percentage was deferred for certain regulated public utility (RPU) plans for as long as six months. The applicable percentage for RPU plans has therefore remained 80 percent for plan years beginning before January 1, 1998. For ''partial'' RPU plans, the assumed interest rates to be used in determining variable-rate premiums can be computed by applying the rules in § 4006.5(g) of the premium rates regulation. The PBGC's 1997 premium payment instruction booklet also describes these rules and provides a worksheet for computing the assumed rate.)

The following table lists the assumed interest rates to be used in determining variable-rate premiums for premium payment years beginning between May 1997 and April 1998. The rates for July through December 1997 in the table (which reflect an applicable percentage of 85 percent) apply only to non-RPU plans. However, the rates for months before July 1997 and after December 1997 apply to RPU (and ''partial'' RPU) plans as well as to non-RPU plans.

For premium payment years beginning in:	The assumed interest rate is:
May 1997	5.67
June 1997	5.55
July 1997	5.75
August 1997	5.53
September 1997	5.59
October 1997	5.53
November 1997	5.38
December 1997	5.19
January 1998	5.09
February 1998	4.94
March 1998	5.01
April 1998	5.06

Late Premium Payments; Underpayments and Overpayments of Single-Employer Plan Termination Liability

Section 4007(b) of ERISA and § 4007.7(a) of the PBGC's regulation on Payment of Premiums (29 CFR part 4007) require the payment of interest on late premium payments at the rate established under section 6601 of the Internal Revenue Code. Similarly, § 4062.7 of the PBGC's regulation on Liability for Termination of Single-employer Plans (29 CFR part 4062) requires that interest be charged or credited at the section 6601 rate on underpayments and overpayments of employer liability under section 4062 of ERISA. The section 6601 rate is established periodically (currently quarterly) by the Internal Revenue Service. The rate applicable to the second quarter (April through June) of 1998, as announced by the IRS, is 8 percent.

The following table lists the late payment interest rates for premiums and employer liability for the specified time periods:

From—	Through—	Interest rate (percent)
4/1/92	9/30/92	8
10/1/92	6/30/94	7
7/1/94	9/30/94	8
10/1/94	3/31/95	9
4/1/95	6/30/95	10
7/1/95	3/31/96	9
4/1/96	6/30/96	8
7/1/96	12/31/96	9
1/1/97	3/31/97	9
4/1/97	6/30/97	9
7/1/97	9/30/97	9
10/1/97	12/31/97	9
1/1/98	3/31/98	9
4/1/98	6/30/98	8

Underpayments and Overpayments of Multiemployer Withdrawal Liability

Section 4219.32(b) of the PBGC's regulation on Notice, Collection, and Redetermination of Withdrawal Liability (29 CFR part 4219) specifies the rate at which a multiemployer plan is to charge or credit interest on underpayments and overpayments of withdrawal liability under section 4219 of ERISA unless an applicable plan provision provides otherwise. For interest accruing during any calendar quarter, the specified rate is the average quoted prime rate on short-term commercial loans for the fifteenth day (or the next business day if the fifteenth day is not a business day) of the month preceding the beginning of the quarter, as reported by the Board of Governors of the Federal Reserve System in Statistical Release H.15 (''Selected Interest Rates''). The rate for the second quarter (April through June) of 1998 (*i.e.*, the rate reported for March 16, 1998) is 8.50 percent.

The following table lists the withdrawal liability underpayment and overpayment interest rates for the specified time periods:

From	Through	Rate (percent)
4/1/92	9/30/92	6.50
10/1/92	6/30/94	6.00
7/1/94	9/30/94	7.25
10/1/94	12/31/94	7.75
1/1/95	3/31/95	8.50
4/1/95	9/30/95	9.00
10/1/95	3/31/96	8.75
4/1/96	12/31/96	8.25
1/1/97	3/31/97	8.25
4/1/97	6/30/97	8.25
7/1/97	9/30/97	8.50
10/1/97	12/31/97	8.50
1/1/98	3/31/98	8.50
4/1/98	6/30/98	8.50

Multiemployer Plan Valuations Following Mass Withdrawal

The PBGC's regulation on Duties of Plan Sponsor Following Mass Withdrawal (29 CFR part 4281) prescribes the use of interest assumptions under the PBGC's regulation on Allocation of Assets in Single-employer Plans (29 CFR part 4044). The interest assumptions applicable to valuation dates in May 1998 under part 4044 are contained in an amendment to part 4044 published elsewhere in today's **Federal Register**. Tables showing the assumptions applicable to prior periods are codified in appendix B to 29 CFR part 4044.

Issued in Washington, DC, on this 8th day of April 1998.

David M. Strauss,

Executive Director, Pension Benefit Guaranty Corporation.

[FR Doc. 98–9749 Filed 4–14–98; 8:45 am]

BILLING CODE 7708–01–P

SECURITIES AND EXCHANGE COMMISSION

[Investment Company Act Release No. 23107; 812–11086]

DG Investor Series, et al.; Notice of Application

April 9, 1998.

AGENCY: Securities and Exchange Commission (''SEC'').

ACTION: Notice of application for exemption under section 6(c) of the Investment Company Act of 1940 (the ''Act'') from section 15(a) of the Act.

SUMMARY OF APPLICATION: The requested order would permit the implementation, without prior shareholder approval, of new advisory (''New Management Agreement'') and sub-advisory agreements (''New Sub-Advisory Agreements'') (collectively, the ''New Agreements'') for a period of up to 120 days following the date of a change in control of ParkSouth Corporation (the ''Adviser'') (but in no event later than September 30, 1998) (the ''Interim Period''). The order also would permit the Adviser and Subadvisers to receive all fees earned under the New Agreements during the Interim Period following shareholder approval.

APPLICANTS: Adviser, Womack Asset Management (''Womack''), Bennett Lawrence Management, LLC (''Bennett''), Lazard Asset Management, a division of Lazard Freres & Co. LLC (''Lazard''), and DG Investor Series (the ''Trust'').

FILING DATE: The application was filed on April 9, 1998.

HEARING OR NOTIFICATION OF HEARING: An order granting the application will be issued unless the SEC orders a hearing. Interested persons may request a hearing by writing to the SEC's Secretary and serving applicants with a copy of the request, personally or by mail. Hearing requests should be received by the SEC by 5:30 p.m. on April 29, 1998, and should be accompanied by proof of service on applicants in the form of an affidavit or, for lawyers, a certificate of service. Hearing requests should state the nature of the writer's interest, the reason for the request, and the issues contested. Persons who wish to be notified of a hearing may request notification by writing to the SEC's Secretary.

ADDRESSES: Secretary, SEC, 450 Fifth Street, NW., Washington, DC 20549. Trust, Advisor, Womack, Bennett, and Lazard, c/o Timothy S. Johnson, Esq., Federated Investors, 5800 Corporate Drive, Pittsburgh, Pennsylvania 15237–7010.

FOR FURTHER INFORMATION CONTACT: John K. Forst, Attorney Advisor, at (202) 942–0569, or Mary Kay Frech, Branch Chief, at (202) 942–0564 (Office of Investment Company Regulation, Division of Investment Management).

SUPPLEMENTARY INFORMATION: The following is a summary of the application. The complete application may be obtained for a fee at the SEC's Public Reference Branch, 450 Fifth Street, NW., Washington, DC 20549 (tel. 202–942–8090).

Applicants' Representations

1. The Trust is a Massachusetts business trust registered under the Act as an open-end management investment company. The Trust currently offers nine series: DG Equity Fund, DG Opportunity Fund (''Opportunity Fund''), DG Mid Cap Fund (''Mid Cap Fund''), DG International Equity Fund (''International Equity Fund''), DG Limited Term Government Income Fund, DG Government Income Fund, DG Municipal Income Fund, DG Prime Money Market Fund, and DG Treasury Money Market Fund (each a ''Portfolio''). The assets of the Trust are managed by the Adviser pursuant to an investment management contract between the Adviser and the Trust on behalf of each Portfolio (the ''Existing Management Agreement''). Womack provides investment advisory services to the Opportunity Fund pursuant to a separate agreement with the Adviser. Bennett provides investment advisory services to the Mid Cap Fund pursuant to a separate agreement with the Adviser. Lazard provides investment advisory services to the International Equity Fund pursuant to a separate agreement with the Adviser (collectively the existing Womack, Bennett and Lazard sub-advisory agreements are the ''Existing Sub-Advisory Agreements''). The Adviser, Womack, Bennett, and Lazard are investment advisers registered under the Investment Advisers Act of 1940.

2. On December 7, 1997, Deposit Guaranty Corporation (''DGC''), corporate parent of the Adviser, and First American Corporation (''First American'') entered into an agreement and plan of merger, whereby DGC will be merged with and into First American, a bank holding company (the ''Transaction''). As a result of the Transaction, the Adviser will become a wholly-owned subsidiary of First American. Applicants expect consummation of the Transaction on April 30, 1998.

3. Applicants believe that the Transaction will result in an assignment of the Existing Management Agreement and could be deemed to result in an assignment of the Existing Sub-Advisory Agreements (together, the Existing Management Agreement and Existing Sub-Advisory Agreements are the ''Existing Agreements''). Applicants request an exemption to permit (i) the implementation, during the Interim Period, prior to obtaining shareholder approval, of the applicable New Agreements, and (ii) the Adviser and Subadvisers to receive from each Portfolio all fees earned under the New Agreement during the Interim Period, as applicable, if, and to the extent, the New Management Agreement and applicable New Sub-Advisory Agreement are approved by the shareholders of each Portfolio. The requested exemption would cover the Interim Period beginning on the date the Transaction is consummated and continuing through the earlier of 120 days or the date on which the applicable New Agreements are approved or disapproved by the shareholders of each relevant Portfolio, but in no event later than September 30, 1998. Applicants state that the New Agreements will be identical in substance to the respective Existing Agreements.

4. On February 26, 1998, the Trust's board of trustees, including a majority of members who are not ''interested persons'' of the Trust, as that term is defined in section 2(a)(19) of the Act (the ''Independent Trustees'') (the ''Board''), held in-person meetings to evaluate whether the terms of the New Agreements are in the best interests of the relevant Portfolios and their shareholders and to approve the New Agreements.[1] Applicants expect shareholders of each of the Portfolios to meet on or about July 15, 1998 (the ''Meetings''). Applicants expect that proxy materials for the Meetings will be mailed on or about May 15, 1998.

5. Applicants propose to enter into an escrow arrangement with an unaffiliated financial institution. The fees payable to the Adviser and Subadvisers during the Interim Period under the New Agreements will be paid into an interest-bearing escrow account maintained by the escrow agent. The escrow agent will release the amounts held in the escrow account (including any interest earned): (a) To the Adviser and applicable Subadviser only upon

[1] The Board considered, among other things, that subsequent to the Transaction, the Adviser personnel serving the Portfolios would do so from a department of First American National Bank, a subsidiary of First American. Since it was subsequently determined that the Adviser will remain a separately organized operating subsidiary of First American and will serve the Portfolios as such, the Board will meet on or about May 12, 1998 to reaffirm its findings and approvals.

approval of the relevant New Agreement(s) by the shareholders of the relevant Portfolio; or (b) to the appropriate Portfolio if the Interim Period has ended and its relevant New Agreement(s) have not received the requisite shareholder approval. Before any such release is made, the Independent Trustees of the Trust will be notified.

Applicants' Legal Analysis

1. Section 15(a) of the Act provides, in pertinent part, that it is unlawful for any person to serve as an investment adviser to a registered investment company, except pursuant to a written contract that has been approved by the vote of a majority of the outstanding voting securities of the investment company. Section 15(a) further requires the written contract to provide for its automatic termination in the event of its ''assignment.'' Section 2(a)(4) of the Act defines ''assignment'' to include any direct or indirect transfer of a contract by the assignor, or of a controlling block of the assignor's outstanding voting securities by a security holder of the assignor.

2. Applicants state that, following the completion of the Transaction, control of the Adviser will transfer to First American. Applicants believe, therefore, that the Transaction will result in an assignment of the Existing Management Agreement and could be deemed to result in an assignment of the Existing Sub-Advisory Agreements and that the Existing Agreements will terminate according to their terms.

3. Rule 15a–4 under the Act provides, in pertinent part, that if an investment advisory contract with a registered investment company is terminated by an assignment, the adviser may continue to serve for 120 days under a written contract that has not been approved by the company's shareholders, provided that: (a) The new contract is approved by that company's board of directors (including a majority of the non-interested directors); (b) the compensation to be paid under the new contract does not exceed the compensation that would have been paid under the contract most recently approved by the company's shareholders; and (c) neither the adviser nor any controlling person of the adviser ''directly or indirectly receives money or other benefit'' in connection with the assignment. Applicants state that because of the benefits to DGC, the Adviser's parent, arising from the Transaction, applicants can not rely on rule 15a–4.

4. Section 6(c) provides that the SEC may exempt any person, security, or transaction from any provision of the Act, if and to the extent that such exemption is necessary or appropriate in the public interest and consistent with the protection of investors and the purposes fairly intended by the policy and provisions of the Act. Applicants believe that the requested relief meets this standard.

5. Applicants note that the timing of the Transaction was determined by DGC and First American and arose primarily out of business considerations unrelated to the Trust. Applicants believe that allowing the Adviser and Subadvisers to continue to provide investment advisory services to the Portfolios during the Interim Period, thereby avoiding any interruption in services to the Portfolios, is in the best interests of the Portfolios and their shareholders and is in keeping with the spirit of the provisions of rule 15a–4 and with the purposes of section 15 of the Act.

6. Applicants submit that the scope and quality of services provided to each Portfolio during the Interim Period will not be diminished. During the Interim Period, each Portfolio would operate under the New Management Agreement and, if applicable, a New Sub-Advisory Agreement each of which is anticipated to be identical in substance to the relevant Existing Agreement, except for its effective date and escrow provisions. Applicants submit that they are not aware of any material changes in the personnel who will provide investment management services during the Interim Period. Accordingly, each Portfolio should receive, during the Interim Period, the same investment advisory services, provided in the same manner, at the same fee levels, and by substantially the same personnel as before the closing of the Transaction.

Applicants' Conditions

Applicants agree as conditions to the issuance of the exemptive order requested by the application that:

1. The New Management Agreement and New Sub-Advisory Agreements will have substantially the same terms and conditions as the Existing Management Agreement and Existing Sub-Advisory Agreements, except for their effective dates and escrow provisions.

2. Fees earned by the Adviser and Subadvisers in respect of the New Management Agreement and New Sub-Advisory Agreements during the Interim Period will be maintained in an interest-bearing escrow account, and amounts in the account (including interest earned on such paid fees) will be paid (a) to the Adviser and Subadvisers in accordance with the New Management Agreement and New Sub-Advisory Agreements, only after the requisite shareholder approvals are obtained, or (b) to the respective Portfolio, in the absence of such approvals with respect to such Portfolio.

3. The Trust will hold meetings of shareholders to vote on approval of the New Management Agreement and New Sub-Advisory Agreements on or before the 120th day following the termination of the Existing Management Agreement and Existing Sub-Advisory Agreements (but in no event later than September 30, 1998).

4. Either the Adviser or the Subadvisers will bear the costs of preparing and filing the application, and costs relating to the solicitation of shareholder approval of the Portfolios necessitated by the Transaction.

5. The Adviser and Subadvisers will take all appropriate steps so that the scope and quality of advisory and other services provided to the Portfolios during the Interim Period will be at least equivalent, in the judgment of the Board, including a majority of the independent Trustees, to the scope and quality of services previously provided. If personnel providing material services during the Interim Period change materially, the Adviser and Subadviser will apprise and consult with the Board to assure that the Trustees, including a majority of the Independent Trustees of the Trust, are satisfied that the services provided will not be diminished in scope or quality.

For the Commission, by the Division of Investment Management, pursuant to delegated authority.

Margaret H. McFarland,

Deputy Secretary.

[FR Doc. 98–10028 Filed 4–14–98; 8:45 am]

BILLING CODE 8010–01–M

SECURITIES AND EXCHANGE COMMISSION

[Rel. No. IC–23106; 812–10780]

Reich & Tang Distributors, Inc., et al.; Application

April 8, 1998.

AGENCY: Securities and Exchange Commission (''SEC'').

ACTION: Notice of Application for Exemption under the Investment Company Act of 1940 (the ''Act'').

SUMMARY OF APPLICATION: Applicants Reich & Tang Distributors, Inc. (the ''Sponsor'') and Equity Series Trust, Asset Allocation Trust (Series 1 and Subsequent Series) (the ''Trust'') request an order: (a) Under section 12(d)(1)(J) of the Act that would permit each series of

the Trust (''Trust Series'') to offer its shares to the public with a sales load that exceeds the 1.5% limit of section 12(d)(1)(F)(ii); (b) under sections 6(c) and 17(b) of the Act for an exemption from section 17(a) of the Act to permit the Trust to invest in affiliated registered investment companies within the limits of section 12(d)(1)(F) of the Act; and (c) under section 6(c) of the Act for an exemption from sections 14(a) and 19(b) of the Act and rule 19b–1 under the Act to permit units of the Trust to be publicly offered without requiring the sponsor to take for its own account or place with others $100,000 worth of units in the Trust, and permit the Trust to distribute capital gains resulting from the sale of portfolio securities within a reasonable time after receipt.

FILING DATES: The application was filed on September 15, 1997 and amended on December 31, 1997. Applicants have agreed to file another amendment during the notice period, the substance of which is included in this notice.

HEARING OR NOTIFICATION OF HEARING: An order granting the application will be issued unless the SEC orders a hearing. Interested persons may request a hearing by writing to the SEC's Secretary and serving applicants with a copy of the request, personally or by mail. Hearing requests should be received by the SEC by 5:30 p.m. on May 4, 1998 and should be accompanied by proof of service on the applicants, in the form of an affidavit or, for lawyers, a certificate of service. Hearing requests should state the nature of the writer's interest, the reason for the request, and the issues contested. Persons who wish to be notified of a hearing may request notification by writing to the SEC's Secretary.

ADDRESSES: Secretary, SEC, 450 Fifth Street, NW, Washington, DC 20549. Applicants: c/o Peter J. DeMarco, Sponsor, 600 Fifth Avenue, New York, NY 10022.

FOR FURTHER INFORMATION CONTACT: David W. Grim, Staff Attorney, at (202) 942–0571, or Nadya B. Roytblat, Assistant Director, at (202) 942–0564 (Division of Investment Management, Office of Investment Company Regulation).

SUPPLEMENTARY INFORMATION: The following is a summary of the application. The complete application may be obtained for a fee from the SEC's Public Reference Branch (tel. 202–942–8090).

Applicants' Representations

1. Each Trust Series will be a separate unit investment trust registered under the Act and organized under a trust indenture that will incorporate by reference a master trust agreement between the Sponsor and a qualified bank as trustee (the ''Trustee''). Pursuant to the trust agreement, the Sponsor will deposit into each Trust Series shares of a number of existing registered investment companies (''Funds''), or contracts and monies for the purchase of shares of such Funds. The portfolio of each Trust Series will consist exclusively of shares of Funds. Units of undivided interest in each Trust Series will be offered to investors typically in approximately $1, $10, or $1,000 increments (''Units''). The Sponsor will serve as the sponsor and depositor for each Trust Series, and will perform functions typical of unit investment trust sponsors.

2. The purpose of each Trust Series is to provide retail investors: (a) An investment with a professionally selected asset allocation model based upon the Sponsor's assessment of the overall economic climate and financial markets, and (b) the opportunity for capital appreciation through a diversified fixed portfolio of Funds professionally selected by the Sponsor from the available Funds within the various market sectors of the Sponsor's asset allocation model. Applicants anticipate that certain of the Funds selected may be advised and/or distributed by the Sponsor or one of its affiliates (''Affiliated Funds''). However, applicants anticipate that most of the Funds selected will be unaffiliated with the Sponsor (''Unaffiliated Funds''). Applicants state that the Trust's investments in Affiliated Funds and Unaffiliated Funds will comply with section 12(d)(1)(F) of the Act in all respects except for the sales load restriction in section 12(d)(1)(F)ii).

3. The only Funds that will be eligible for inclusion in a Trust Series are either no load Funds or Funds which, although they offer shares with a front-end sales charge, agree to waive any otherwise applicable sales load with respect to all shares sold or deposited in any Trust Series. Shares of each of the Funds (except for closed-end Funds) will, therefore, be sold for deposit into any Trust Series at net asset value. Shares of closed-end Funds will be purchased by a Trust Series at market prices. Investors in the Trust (''Unitholders'') will pay a specified sales load to the Sponsor in connection with the purchase of their Units. Sales loads imposed on Units are expected to range from 2.00% to 5.25% of the public offering price of the Units, with the actual amount dependent upon the number of Units purchased and the specified term of the Trust Series.

4. No evaluation fee will be charged with respect to determining the value of the Fund's shares that comprise the Trust's portfolio because shares of the Funds have their net asset values calculated daily, and these will be readily available to the Sponsor. The Trustee will receive service fees under a rule 12b–1 plan from the Funds to compensate it for providing servicing and sub-accounting functions with respect to Fund shares held by a Trust Series. The Trustee will reduce its regular fee to the Trust directly by the fees it receives from the Funds and rebate any excess fees it receives to the Trust. Any fees so rebated will be utilized by the Trust to absorb other bona fide Trust expenses. To the extent that these fees exceed the total Trust expenses, the excess will be distributed along with other income earned by the Trust.

Applicants' Legal Analysis

Section 12(d)(1) of the Act

1. Section 12(d)(1)(A) of the Act provides that no registered investment company may acquire securities of another investment company if such securities represent more than 3% of the acquired company's outstanding voting stock, more than 5% of the acquiring company's total assets, or if such securities, together with the securities of any other acquired investment companies, represent more than 10% of the acquiring company's total assets.

2. Section 12(d)(1)(F) of the Act provides that section 12(d)(1) does not apply to securities purchased or otherwise acquired by a registered investment company is immediately after the purchase or acquisition not more than 3% of the total outstanding stock of the acquired company is owned by the acquiring company and its affiliated persons and the acquiring company does not impose a sales load on its shares of more than 1.5%. In addition, no acquired company may be obligated to honor any acquiring company redemption request in excess of 1% of the acquired company's securities during any period of less than 30 days, and the acquiring company must vote its acquired company shares either in accordance with instructions from its shareholders or in the same proportion as all other shareholders of the acquired company.

3. The Trust Series will invest in Affiliated and Unaffiliated Funds in reliance on section 12(d)(1)(F) of the Act. If the requested relief is granted, the Trust Series will offer Units to the

public with a sales load that exceeds the 1.5% limit in section 12(d)(1)(F)(ii).

4. Section 12(d)(1)(J) of the Act provides that the SEC may exempt any person or transaction from any provision of section 12(d)(1) if and to the extent that such exemption is consistent with the public interest and the protection of investors.

5. Applicants state that investors in the Trust and subsequent series will pay a specified sales load, expected to range from 2.00% to 5.25% of the public offering price of the Units, to the Sponsor in connection with the purchase of their Units. Applicants have agreed, as a condition to the relief, that any sales charges, distribution-related fees, and service fees relating to Units, when aggregated with any sales charges, distribution-related fees, and service fees paid by the Trust relating to its acquisition, holding, or disposition of shares of the Funds, will not exceed the limits set forth in rule 2830 of the NASD Conduct Rules. Applicants believe that it is appropriate to apply the NASD's Rule to the proposed arrangement in place of the sales load limitation in section 12(d)(1)(F) because the proposed limit would cap the aggregate sales charges of the Units and the underlying Funds, and because the proposed limit is consistent with the limit recently adopted in section 12(d)(1)(G) of the Act. Applicants assert that the NASD's specific sales charge rules more accurately reflect today's regulatory environment with respect to the methods by which investment companies finance sales expenses. Applicants contend that section 12(d)(1)(F), on the other hand, was adopted more than a quarter of a century ago and does not reflect the changes in the pricing practices of the industry.

6. Applicants state that, with respect to shares of closed-end Funds held by a Trust Series, no front-end sales loads, contingent deferred sales charges, rule 12b–1 fees, or other distribution fees or redemption fees will be charged in connection with the purchase or sale of these Funds by a Trust Series. Applicants state that, although the Trust Series likely will incur brokerage commissions in connection with its market purchases of shares of closed-end Funds, these commissions will not differ materially from commissions otherwise incurred in connection with the purchase or sale of comparable portfolio securities.

7. Applicants also agree as a condition to the requested relief that no Trust Series will invest in any underlying Fund that acquires securities of any other investment company in excess of the limits contained in section 12(d)(1)(A) of the Act.

Section 17(a) of the Act

1. With regard to Trust Series' investments in Affiliated Funds, applicants request relief from section 17(a) of the Act under sections 6(c) and 17(b). Section 17(a) of the Act generally prohibits an affiliated person, or an affiliated person of an affiliated person, of a registered investment company from selling securities to, or purchasing securities from, the company.

2. Section 6(c) of the Act provides that the SEC may exempt persons or transactions from any provision of the Act if such exemption is necessary or appropriate in the public interest and consistent with the protection of investors and the purposes fairly intended by the policy and provisions of the Act. Section 17(b) of the Act provides that the SEC shall exempt a proposed transaction from section 17(a) if evidence establishes that (a) the terms of the proposed transaction, including the consideration to be paid or received, are reasonable and fair and do not involve overreaching; (b) the proposed transaction is consistent with the policies of the registered investment company involved; and (c) the proposed transaction is consistent with the general purposes of the Act.

3. Applicants state that shares of Affiliated Funds will be sold to the Trust at net asset value, or, in the case of closed-end Funds, at market prices. As a result, applicants believe that the proposed terms and conditions of the Trust's transactions, including the consideration to be paid or received, will be reasonable and fair and will not involve overreaching on the part of any person involved. Furthermore, applicants believe that the proposed transactions will be consistent with the policies of the Trust as recited in its registration statement.

Section 14(a) of the Act

1. Section 14(a) of the Act requires in substance that an investment company have $100,000 of net worth prior to making a public offering. Applicants believe that each Trust Series will comply with this requirement because the Sponsor will deposit substantially more than $100,000 of Fund shares in each Trust Series. Applicants assert, however, that a Trust Series would not satisfy section 14(a) because of the Sponsor's intention to sell all of its Units.

2. Rule 14a–3 under the Act exempts unit investment trusts from section 14(a) if certain conditions are met, one of which is that the Trust invest only in ''eligible trust securities,'' as defined in the rule. Applicants submit that the Trust could not rely on the rule because Fund shares are not eligible trust securities. Consequently, applicants seek an exemption under section 6(c) from the net worth requirement of section 14(a). Applicants state that the Trust and the Sponsor will comply in all respects with the requirements of rule 14a–3, except that the Trust will not restrict its portfolio investments to ''eligible trust securities.''

Section 19(b) of the Act

1. Section 19(b) of the Act and rule 19b–1 under the Act provide that, except under limited circumstances, no registered investment company may distribute long-term gains more than once every twelve months. Rule 19b–1(c), under certain circumstances, excepts a unit investment trust investing in ''eligible trust securities'' (as defined in rule 14a–3) from the requirements of rule 19b–1. Because the Trust does not limit its investments to ''eligible trust securities,'' the Trust does not qualify for the exemption in paragraph (c) of rule 19b–1. Therefore, applicants request an exemption under section 6(c) from section 19(b) and rule 19b–1 to the extent necessary to permit capital gains earned in connection with the redemption of Fund shares to be distributed to Unitholders along with the Trust's regular distributions. Applicants state that, in all other respects, the Trust will comply with section 19(b) and rule 19b–1. Applicants assert that the abuses that section 19(b) and rule 19b–1 were designed to prevent do not arise with regard to the Trust. Applicants state that any gains from the redemption of Fund shares would be triggered by the need to meet Trust expenses or by requests to redeem Units, events over which the Sponsor and the Trust have no control.

Applicants' Conditions

Applicants agree that the requested order will be subject to the following conditions:

1. Each Trust Series will comply with section 12(d)(1)(F) in all respects except for the sales load limitation of section 12(d)(1)(F)(ii).

2. Any sales charges, distribution-related fees, and service fees relating to the Units, when aggregated with any sales charges, distribution-related fees, and service fees paid by the Trust relating to its acquisition, holding, or disposition of shares of the Funds, will not exceed the limits set forth in rule 2830 of the NASD Conduct Rules.

3. No Fund will acquire securities of any other investment company in excess

of the limits contained in section 12(d)(1)(A) of the Act.

4. The Trust and the Sponsor will comply in all respects with the requirements of rule 14a–3, except that the Trust will not restrict its portfolio investments to ''eligible trust securities.''

5. No Trust Series will terminate within thirty days of the termination of any other Trust Series that holds shares of one or more common Funds.

6. The prospectus of each Trust Series and any sales literature or advertising that mentions the existence of an in-kind distribution option will disclose that Unitholders who elect to receive Fund shares will incur any applicable rule 12b–1 fees.

For the Commission, by the Division of Investment Management, under delegated authority.

Margaret H. McFarland,

Deputy Secretary.

[FR Doc. 98–9884 Filed 4–14–98; 8:45 am]

BILLING CODE 8010–01–M

SECURITIES AND EXCHANGE COMMISSION

[Investment Company Act Release No. 23108; 812–10812]

Sanford C. Bernstein Fund, Inc., et al.; Application

April 9, 1998.

AGENCY: Securities and Exchange Commission (''SEC'').

ACTION: Notice of application for an order under section 17(d) of the Investment Company Act of 1940 (the ''Act'') and rule 17d–1.

SUMMARY OF APPLICATION: Applicants request an order to permit certain registered open-end management investment companies to deposit their uninvested cash balances in a joint account to be used to enter into short-term investments.

APPLICANTS: Sanford C. Bernstein Fund, Inc. (the ''Fund''), and Sanford C. Bernstein & Co., Inc. (''Bernstein'').

FILING DATES: The application was filed on October 7, 1997 and amended on April 2, 1998. Applicants have agreed to file an amendment during the notice period, the substance of which is reflected in this notice.

HEARING OR NOTIFICATION OF HEARING: An order granting the application will be issued unless the SEC orders a hearing. Interested persons may request a hearing by writing to the SEC's Secretary and serving applicants with a copy of the request, personally or by mail. Hearing requests should be received by the SEC by 5:30 p.m. on May 4, 1998, and should be accompanied by proof of service on applicants, in the form of an affidavit or, for lawyers, a certificate of service. Hearing requests should state the nature of the writer's interest, the reason for the request, and the issues contested. Persons who wish to be notified of a hearing may request notification by writing to the SEC's Secretary.

ADDRESSES: Secretary, SEC, 450 Fifth Street, NW., Washington, DC 20549. Applicants, 767 Fifth Avenue, New York, NY 10153.

FOR FURTHER INFORMATION CONTACT: Kathleen L. Knisely, Staff Attorney, at (202) 942–0517, or Nadya B. Roytblat, Assistant Director, at (202) 942–0564 (Division of Investment Management, Office of Investment Company Regulation).

SUPPLEMENTARY INFORMATION: The following is a summary of the application. The complete application may be obtained for a fee at the SEC's Public Reference Branch, 450 Fifth Street, NW., Washington, DC 20549 (tel. 202–942–8090).

Applicants' Representations

1. The Fund, organized as a Maryland corporation, is registered under the Act as an open-end management investment company. The Fund is a series company and currently has eleven portfolios (''Portfolios'').[1]

2. Bernstein, organized as a New York corporation, is an investment adviser registered under the Investment Advisers Act of 1940. Bernstein serves as the investment adviser to each Portfolio.

3. Each of the Portfolios may have uninvested cash balances available. The amount of the cash balances, on any given day is a function of a number of factors, such as portfolio management decisions, shareholder purchases and redemptions, and settlement of trades on dates other than predicted. Each Portfolio is authorized by its investment policies and restrictions to invest a portion of its uninvested cash balances in short-term liquid assets, including commercial paper, repurchase agreements, daily variable rate demand notes, Treasury bills, United States government agency certificates, term bank deposits, certificates of deposits and bankers acceptances (''Short Term Investments''). The assets of the Portfolios are held by a bank custodian, which is not an affiliated person of either the Fund or Bernstein.

4. Currently, Bernstein must purchase Short Term Investments separately on behalf of each Portfolio. Applicants believe that the separate purchasing of Short Term Investments results in certain inefficiencies, increased costs, and a limitation on the return. Applicants propose that the Portfolios deposit uninvested cash balances available on each trading day into a joint account (the ''Joint Account'') and that the daily balance of the Joint Account be invested in Short Term Investments. The sole function of the Joint Account will be to provide a convenient means of aggregating what otherwise would be one or more daily transactions for each Portfolio necessary to manage the Portfolio's respective daily uninvested cash balances.

5. Bernstein will not charge any additional or separate fees for operating or advising the Joint Account and will have no monetary participation in the Joint Account. Bernstein will be responsible for investing Portfolio funds held in the Joint Account, establishing accounting and control procedures, and ensuring equal treatment of the Portfolios.

6. Any repurchase agreements entered into through the Joint Accounts will comply with the terms of Investment Company Act Release No. 13005 (February 2, 1983). Applicants acknowledge that they have a continuing obligation to monitor the SEC's published statements on repurchase agreements and other Short Term Investments. Applicants represent that each Portfolio will conform its investments and adopt any appropriate systems and standards to comply with any future SEC guidelines with respect to any type of Short Term Investments.

Applicants' Legal Analysis

1. Section 17(d) of the Act and rule 17f–1 under the Act prohibit an affiliated person of a registered investment company, or an affiliated person of such a person, from participating in any joint enterprise or arrangement in which the investment company is a participant, unless the SEC has issued an order authorizing the arrangement.

2. Applicants believe that each Portfolio, by participating in the Joint Account, and Bernstein, by managing the Joint Account, could be deemed to be a ''joint participant'' in a transaction. In addition, the Joint Account could be deemed to be a ''joint enterprise or other joint arrangement'' within the meaning of rule 17d–1 under the Act.

[1] Applicants also request relief for all future portfolios of the Fund and for all future registered open-end management investment companies advised by Bernstein.

3. Applicants believe that the participating Portfolios may earn a higher return on investments through the Joint Account relative to rates they could earn individually because under certain market conditions, it is possible to negotiate a rate of return on large Short Term Investments which is greater than the rate of return which can be negotiated for smaller Short Term Investments. Applicants also contend that the Joint Account may reduce the potential for error by reducing the number of trade tickets which must be processed by the Fund's custodian bank and the Fund's accounting department.

4. Applicants believe each Portfolio will participate in the Joint Account on the same basis as every other Portfolio in conformity with its investment objectives, policies, and restrictions. Applicants state that a Portfolio's investment in the Joint Account will not be subject to the claims of creditors, whether brought in bankruptcy, insolvency, or other legal proceeding. Applicants also state that each Portfolio's investment in any Short Term Investment purchased by the Joint Account will be limited to its interest in the Short Term Investment.

6. For the reasons set forth above, applicants believe that granting the requested order is consistent with the provisions, policies, and purposes of the Act, and that the Portfolios' participation in the Joint Account will not be on a basis different from or less advantageous than that of any other participating Portfolio.

Applicants' Conditions

Applicants agree that the requested order shall be subject to the following conditions:

1. The Joint Account will be established on behalf of the Portfolios with the custodian as a separate cash account into which the Portfolios may deposit daily all or a portion of their uninvested cash balances. The Joint Account will not be distinguishable from any other accounts maintained by the Portfolios with the custodian except that monies from the various Portfolios will be deposited in the Joint Account on a commingled basis. The Joint Account will not have any separate existence with the indicia of a separate legal entity. The sole function of the Joint Account will be to provide a convenient and productive way of aggregating individual transactions that would otherwise require daily management and investment by each Portfolio of its uninvested cash balances.

2. Cash in the Joint Account will be invested in one or more of the following Short Term Investments, as determined by Bernstein: (a) Commercial paper, repurchase agreements ''collateralized fully'' (as that term is defined in rule 2a–7 under the Act), Treasury bills, United States government agency certificates, term bank deposits, certificates of deposit and bankers' acceptances, in each case having remaining maturities of 60 days or less as calculated in accordance with rule 2a–7 under the Act; and (b) daily variable rate demand notes with demand features providing for maturities of 30 days or less. Any Short Term Investment must be an ''Eligible Security'' within the meaning of rule 2a–7 under the Act. No Portfolio will be permitted to invest in the Joint Account unless the Short Term Investments in the Joint Account will comply with the investment policies and guidelines of that Portfolio.

3. All assets held by the Joint Account will be valued on an amortized cost basis to the extent permitted by applicable SEC releases, letters, or orders.

4. Each Portfolio valuing its net assets based on amortized cost in reliance upon rule 2a–7 under the Act will use the average maturity of the instrument(s) in the Joint Account (determined on a dollar-weighted basis) for the purpose of computing its average portfolio maturity with respect to the portion of its assets held in the Joint Account on that day.

5. To assure that there will be no opportunity for one Portfolio to use any part of a balance of the Joint Account credited to another Portfolio, no Portfolio will be allowed to create a negative balance in the Joint account for any reason. Each Portfolio would be permitted to draw down its entire balance at any time, provided Bernstein determines that such draw down would have no significant adverse impact on any other Portfolio participating in the Joint Account. Each Portfolio's decision to invest in the Joint Account would be solely at its option, and no Portfolio will be obligated to invest in the Joint Account or to maintain any minimum balance in the Joint Account. In addition, each Portfolio will retain the sole rights of ownership of any of its assets, including interest payable on such assets, invested in the Joint Account.

6. Bernstein will administer, manage, and invest the cash balance in the Joint Account in accordance with and as part of its duties under existing, or any future, investment advisory contracts with the Fund and/or Portfolios. Bernstein will not collect any additional or separate fee for advising or managing the Joint Account.

7. The administration of the Joint Account will be within the fidelity bond coverage maintained for the Portfolios as required by section 17(g) of the Act and rule 17g–1 under the Act.

8. The Fund's board of directors (''Board'') will adopt procedures for each of the Portfolios pursuant to which the Joint Account will operate, which procedures will be reasonably designed to provide that the requirements of this application will be met. The Board will make and approve such changes that it deems necessary to ensure that such procedures are followed. In addition, the Board will evaluate annually the Joint Account arrangements to determine whether the Joint Account has been operated in accordance with the adopted procedures, and shall continue the Fund's continued participation in the Joint Account only if there is a reasonable likelihood that the Joint Account would benefit the Fund and its shareholders.

9. Each Portfolio's investment in the Joint Account will be documented daily on the books of the Fund and on the books of each Portfolio. Each Portfolio, through Bernstein and/or its custodian, will maintain records (in conformity with section 31 of the Act and rules thereunder) documenting for any given day, the Portfolio's aggregate investment in the Joint Account and its pro rata share of each investment made through the Joint Account.

10. Each Portfolio will participate in the Joint Account on the same basis as every other Portfolio in conformity with its respective fundamental investment objectives, policies, and restrictions. Any future registered open-end management investment companies that are advised by Bernstein and Portfolios that participate in the Joint Account would be required to do so on the same terms and conditions as the existing Fund and Portfolios.

11. Each investment made through the Joint Account will satisfy the investment criteria of each Portfolio participating in the joint investment.

12. Not every Portfolio participating in the Joint Account will necessarily have its cash invested in every Short Term Investment held in the Joint Account. However, to the extent a Portfolio's cash is applied to particular Short Term Investments made through the Joint Account, the Portfolio will participate in and own a proportionate share of such investment, and the income earned or accrued thereon, based upon the percentage of such investment purchased with monies contributed by the Portfolio.

13. Investments held in a Joint Account generally will not be sold prior to maturity except: (a) If Bernstein believes that the investment no longer presents minimal credit risk; (b) if, as a result of credit downgrading or otherwise, the investment no longer satisfies the investment criteria of all Portfolios participating in the investment; or (c) if the counterparty defaults. A Portfolio may, however, sell its fractional portion of an investment in the Joint Account prior to the maturity of an investment in such account if the cost of the transaction would not aversely affect the other Portfolios participating in the Joint Account. In no case would an early termination by less than all participating Portfolios be permitted if it would reduce the principal amount or yield received by other Portfolios participating in the Joint Account or otherwise adversely affect the other participating Portfolios. Each Portfolio participating in the Joint Account will be deemed to have consented to such sale and partition of the investment in such account.

14. Short Term Investments held through the Joint Account with a remaining maturity of more than seven days, as calculated pursuant to rule 2a–7 under the Act, will be considered illiquid and subject to the restriction that the Portfolio may not invest more than 15% (or such other percentage as set forth by the SEC from time to time) of its net assets in illiquid securities and any similar restrictions set forth in the Portfolio's investment restrictions and policies, if Bernstein cannot sell the instrument, or the Portfolio's fractional interest in such instrument, pursuant to the preceding condition.

For the Commission, by the Division of Investment Management, under delegated authority.

Margaret H. McFarland,

Deputy Secretary.

[FR Doc. 98–10026 Filed 4–14–98; 8:45 am]

BILLING CODE 8010–01–M

SECURITIES AND EXCHANGE COMMISSION

[Release No. 33–7524, File No. S7–11–98]

Securities Uniformity; Annual Conference on Uniformity of Securities Laws

AGENCY: Securities and Exchange Commission.

ACTION: Notice of conference; request for comments.

SUMMARY: The Commission and the North American Securities Administrators Association, Inc. today announced a request for comments on the proposed agenda for their annual conference to be held on May 4, 1998. This meeting is intended to carry out the policies and purposes of section 19(c) of the Securities Act of 1933, which are to increase cooperation between the Commission and state securities regulatory authorities in order to maximize the effectiveness and efficiency of securities regulation.

DATES: The conference will be held on May 4, 1998. Written comments must be received on or before April 29, 1998 in order to be considered by the conference participants.

ADDRESSES: Please send three copies of written comments by April 29, 1998 to Jonathan G. Katz, Secretary, Securities and Exchange Commission, 450 5th Street, NW, Washington, DC 20549. Comments also can be sent electronically to the following E-mail address: rule-comments@sec.gov. Comment letters should refer to File No. S7–11–98; if E-mail is used, please include this file number on the subject line. Anyone can inspect and copy the comment letters at our Public Reference Room, 450 5th Street, NW, Washington, DC 20549. All electronic comment letters will be posted on the Commission's internet web site (http://www.sec.gov).

FOR FURTHER INFORMATION CONTACT: John D. Reynolds, Office of Small Business Review, Division of Corporation Finance, Securities and Exchange Commission, 450 5th Street, NW, Washington, DC 20549, (202) 942–2950.

SUPPLEMENTARY INFORMATION:

I. Discussion

A dual system of federal-state securities regulation has existed since the adoption of the federal regulatory structure in the Securities Act of 1933 (the ''Securities Act'').[1] Issuers trying to raise capital through securities offerings, as well as participants in the secondary trading markets, are responsible for complying with the federal securities laws as well as all applicable state laws and regulations. It has long been recognized that there is a need to increase uniformity between federal and state regulatory systems, and to improve cooperation among those regulatory bodies so that capital formation can be made easier while investor protections are retained.

Congress endorsed greater uniformity in securities regulation with the enactment of section 19(c) of the Securities Act in the Small Business Investment Incentive Act of 1980.[2] Section 19(c) authorizes the Commission to cooperate with any association of state securities regulators which can assist in carrying out the declared policy and purpose of section 19(c). The policy of that section is that there should be greater federal and state cooperation in securities matters, including:

- Maximum effectiveness of regulation;
- Maximum uniformity in federal and state standards;
- Minimum interference with the business of capital formation; and
- Substantial reduction in costs and paperwork to decrease the burdens of raising investment capital, particularly by small business, and reduce the costs of the government programs involved.

In order to establish methods to accomplish these goals, the Commission is required to conduct an annual conference. The 1998 meeting will be the fifteenth conference.

During 1996, Congress again examined the system of dual federal and state securities regulation and the need for regulatory changes to promote capital formation, eliminate duplicative regulation, decrease the cost of capital and encourage competition, while at the same time promoting investor protection. These efforts resulted in passage of The National Securities Markets Improvement Act of 1996[3] (the ''1996 Act''). The 1996 Act contains significant provisions that realign the regulatory partnership between federal and state regulators. The legislation reallocates responsibility for regulation of the nation's securities markets between the federal government and the states in order to eliminate duplicative costs and burdens and improve efficiency, while preserving investor protections.

II. 1998 Conference

The Commission and the North American Securities Administrators Association, Inc. (''NASAA'')[4] are planning the 1998 Conference on Federal-State Securities Regulation (the ''Conference'') to be held May 4, 1998 in Washington, D.C. At the Conference, Commission and NASAA representatives will form into working groups in the areas of corporation finance, market regulation and oversight, investment management, and

[1] 15 U.S.C. 77a *et seq.*

[2] Pub. L. 96–477, 94 Stat. 2275 (October 21, 1980).

[3] Pub. L. 104–290, 110 Stat. 3416 (October 11, 1996).

[4] NASAA is an association of securities administrators from each of the 50 states, the District of Columbia, Puerto Rico, Mexico and twelve Canadian Provinces and Territories.

enforcement, to discuss methods of enhancing cooperation in securities matters in order to improve the efficiency and effectiveness of federal and state securities regulation. Generally, attendance will be limited to Commission and NASAA representatives to encourage frank discussion. However, each working group in its discretion may invite certain self-regulatory organizations to attend and participate in certain sessions.

The Commission and NASAA are formulating an agenda for the Conference. As part of that process the public, securities associations, self-regulatory organizations, agencies, and private organizations are invited to participate by submitting written comments on the issues set forth below. In addition, comment is requested on other appropriate subjects sought to be included in the Conference agenda. All comments will be considered by the Conference attendees.

III. Tentative Agenda and Request for Comments

The tentative agenda for the Conference consists of the following topics in the areas of corporation finance, investment management, market regulation and oversight, and enforcement.

(1) Corporation Finance Issues

A. Uniformity of Regulation

The 1996 Act amended section 18 of the Securities Act [5] to preempt state blue-sky registration and review of securities offerings of ''covered securities.'' [6] ''Covered securities'' are defined by section 18 and include several types of securities, including ''nationally traded securities,'' *i.e.*, securities traded on the New York Stock Exchange, Inc. (''NYSE''), American Stock Exchange, Inc. (''AMEX'') or the Nasdaq National Market System (''Nasdaq/NMS''). ''Covered securities'' also include registered investment company securities and certain exempt securities and offerings.

Securities that are not ''covered securities'' remain subject to state registration requirements. These securities include:

- Securities quoted on the Nasdaq SmallCap market or the NASD over-the-counter Bulletin Board (''OTC Bulletin Board'');
- Securities quoted on the over-the-counter ''pink sheets'';
- Securities listed on securities exchanges other than the NYSE or AMEX; [7]
- Various securities of non-listed issuers, such as asset-backed and mortgage-backed securities;
- Private placements of securities under section 4(2) of the Securities Act that do not meet the requirements of Rule 506 of Regulation D; [8] and
- Securities issued in exempt offerings under Regulation A [9] and Rules 504 and 505 of Regulation D.

The states retain certain authority in connection with offerings of covered securities. With respect to these offerings (other than nationally-traded securities), the states have the right to require specified fee payments and/or notice filings.[10] The states' authority over securities offerings continues the need for uniformity between the federal and state registration systems, where consistent with investor protection.

The 1996 Act required the Commission to conduct a study about the extent of uniformity among state regulatory requirements for securities and securities transactions that are not ''covered securities'' (the ''Uniformity Study'').[11] The Commission issued the study results in its ''Report on the Uniformity of State Regulatory Requirements for Offerings of Securities that are not 'Covered Securities' '' in October 1997 (the ''Uniformity Report''). As part of the Uniformity Study, the Commission distributed surveys to state securities administrators, various issuers, broker-dealers and law firms requesting information concerning the extent of uniformity among state regulatory requirements for securities that are not preempted by the 1996 Act. The surveys also were posted on the Commission's Internet web site. The Commission received 46 responses from state securities regulators and more than 100 responses from issuers, law firms, broker-dealers, and others, including NASAA and the Securities Industry Association.

The Uniformity Study found that the states have taken significant actions to increase uniformity in regulating offerings of securities that are not ''covered securities.'' Examples of this progress include, among others:

- Coordinated state review of certain offerings registered at the federal level;
- A uniform registration statement for offerings exempt at the federal level and a regional state review program for this form; and,
- Statements of policy on several matters that enhance uniformity in review among the states.

Despite this significant progress, certain survey respondents reported differences among the states in several areas including, for example, the following:

- Standards of merit review;
- Length of comment periods;
- Suitability standards; and
- Notice requirements for exempt offerings.

The Uniformity Study focused on the degree of uniformity among state regulatory requirements for offerings of securities that are not ''covered securities.'' Despite this focus, some survey respondents provided information regarding the effects of preemption of ''covered securities.'' While most respondents noted the benefits from preemption, some commenters voiced concerns in the areas of Rule 506 offerings, issuer-dealer registrations and notices for secondary trading transactions.

Conferees will discuss the Uniformity Report, the nature and extent of uniformity at present and methods to increase uniformity.

B. Definition of Qualified Purchaser and Accredited Investor; NASAA's Model Accredited Investor Exemption

Section 18 of the Securities Act, as amended by the 1996 Act, excludes from state regulation and review securities offerings to purchasers who are defined by Commission's rules to be ''qualified purchasers.'' [12] A security sold to a ''qualified purchaser'' is a ''covered security'' subject to the same regulatory approach as other covered securities. The Commission will be undertaking rulemaking to define ''qualified purchaser'' for this purpose. In this process, the Commission is considering whether changes should be made to the definition of ''accredited investor''[13] under the Securities Act,

[5] 15 U.S.C. 77r.

[6] 15 U.S.C. 77r (a) and (b).

[7] The Commission may designate securities listed on other exchanges to be covered securities if it determines by rule that the listing standards of such exchanges are substantially similar to the listing standards of the NYSE, AMEX or Nasdaq/NMS. The Commission has adopted Rule 146(b) under the Securities Act which designates securities listed on the Chicago Board Options Exchange, Tier I of the Pacific Exchange and Tier I of the Philadelphia Stock Exchange as covered securities for purposes of section 18. Securities Act Release No. 7494 (January 13, 1998) [63 FR 3032].

[8] 17 CFR 230.501 through 230.508.

[9] 17 CFR 230.251 through 230.263.

[10] Following the 1996 Act, the states also retain anti-fraud authority over all securities offerings, including offerings of covered securities.

[11] Section 102(b) of the 1996 Act.

[12] 15 U.S.C. 77r(b)(3).

[13] The term ''accredited investor,'' as defined by the Securities Act and the Commission's rules, is intended to encompass those persons whose financial sophistication render the protections of the Securities Act registration process unnecessary.

Continued

and whether the definitions of ''qualified purchaser'' and ''accredited investor'' should be similar or different. The appropriate criteria for these two definitions will be discussed by Commission and NASAA representatives.

Participants also will discuss NASAA's Model Accredited Investor Exemption which was adopted in 1997. Generally, the model rule exempts offers and sales of securities from state registration requirements if, among other things, the securities are sold only to persons who are, or are reasonably believed to be, accredited investors. To date, ten states have adopted the exemption. Twelve other states indicate that they intend to adopt the exemption in the near future and another six are considering adoption. State representatives will share their experiences with the exemption, including any issues that have arisen.

C. Small Business Initiatives

In February 1997, the Commission proposed amendments to Rule 430A to permit certain smaller or less seasoned reporting companies to price securities on a delayed basis after effectiveness of a registration statement, if they meet specified conditions.[14] The proposals are intended to provide flexibility and efficiency to qualified registrants, enabling them to time their offerings to advantageous market conditions, consistent with investor protection. The coordination of Rule 430A procedures with state registration and review procedures raises certain issues, such as when state registration fees become payable and when state reviews will be conducted. Conferees will discuss these various issues and ways to increase coordination between federal and state procedures.

The Commission recently proposed revisions to Rule 701 under the Securities Act.[15] Rule 701 provides an exemption for the offer and sale of securities to employees and certain other persons by private companies under compensatory benefit plans or written compensation agreements. The proposals are designed to expand the ability of issuers to use the rule, improve the disclosures provided in offerings under the rule and clarify and simplify the rule. For example, the proposals would remove the current limitations based on offers and instead focus only on the amount of sales permitted each year. Issuers would be allowed to sell securities each year up to an amount determined under two formulas (*i.e.*, 15% of total assets or 15% of outstanding securities) or $1 million, whichever is greater. The present $5 million limitation on the aggregate offering amount would be removed from the rule. Rule 701 now does not impose any specific disclosure obligations on the issuer. The proposed rule revisions would require disclosure of risk factors and the unaudited financial statements required in a Regulation A offering.

The participants will discuss the impact of these proposed rule changes, if adopted, and the need for any additional rulemaking in the small business area.

Commission and state representatives will discuss whether changes should be made to the Regulation D exemptions. Rule 506 of Regulation D provides a ''safe harbor'' for non-public offerings under section 4(2) of the Securities Act. An issuer which satisfies the requirements of Rule 506 can be assured that its offering will qualify as a non-public offering under section 4(2).[16] As noted above, securities issued in a Rule 506 offering are covered securities and therefore preempted from state registration requirements. Because Rule 506 offerings are preempted from state registration, conferees will consider whether Rule 506 requirements should be revised.

Rule 504 of Regulation D provides an exemption from the Securities Act registration requirements for offerings up to $1 million in any 12-month period, if certain conditions are met. Generally, Rule 504 is available only to the smallest companies. Issuers in Rule 504 offerings may use general solicitation or advertising, and the securities issued in those offerings are freely tradeable. Rule 504 offerings are not subject to specific federal disclosure requirements nor are these offerings reviewed at the federal level. The Commission is concerned that this current federal approach to Rule 504 offerings may be contributing to fraudulent offerings by micro-cap issuers, *i.e.*, issuers with small amounts of capitalization, or fraudulent aftermarket trading in securities of micro-cap issuers on the OTC Bulletin Board or in the ''pink sheets.'' Commission and state representatives will discuss whether and how Rule 504 should be revised to address these fraud concerns while at the same time preserving the ability of small companies to raise capital.

Conferees will discuss several state initiatives designed to facilitate offerings by smaller issuers. These initiatives include:

- The Coordinated Equity Review (''CER'') program;
- The Small Company Offering Registration (''SCOR'') form; and
- The state regional review program for SCOR and Regulation A filings (the ''Regional Review Program'').

The CER program provides for a coordinated state review process for offerings of equity securities registered at the federal level. Under CER, the participating states coordinate with each other to produce one comment letter to an issuer which addresses both substantive and disclosure matters. To date, 38 states (out of 43 states that require registration of these offerings) have agreed to participate in the program.

Many states use a similar coordinated program to review state registrations using the SCOR form, the ''Regional Review Program.'' The SCOR form is a simplified question and answer format used for the registration of securities offerings with approximately 40 states. This form is used to register securities offerings exempt from registration under Rule 504 of Regulation D or Regulation A at the federal level. Under the Regional Review Program, states in certain regions of the country elect one state to lead the review and issue comments on the filing. Three regional programs have been started to date and include about half of the states requiring registration of these offerings. The SCOR form was adopted by NASAA in 1989. NASAA's Small Business Capital Formation and Regional Review Committee is considering certain revisions to update and modernize the form.

NASAA's representatives will discuss their experiences with the SCOR form and the state coordinated review programs, including issues which have arisen in their use. Participants will consider how these programs may be improved to increase uniformity between the federal and state levels.

During 1997 and 1998, the Commission continued to meet with small businesses in town hall meetings conducted throughout the United States. These town hall meetings are intended to provide basic information about the securities offering process to small business issuers and educate the Commission about the concerns and problems facing small businesses in raising capital. To date, nine town hall

Offers and sales to these investors are afforded special treatment under the federal securities laws.

[14] Securities Act Release No. 7393 (February 20, 1997) (62 FR 9276).

[15] Securities Act Release No. 7511 (February 27, 1998) [63 FR 10785].

[16] An offering which does not meet the requirements of Rule 506 nevertheless may qualify as a section 4(2) non-public offering based on the facts and circumstances of the offering.

meetings have been held, attended by more than 2,500 small business persons. NASAA and Commission representatives will discuss information and ideas obtained from these meetings.

D. Securities Act Concept Release

The Commission has been engaged in a broad reexamination of the regulatory framework for the offer and sale of securities under the federal securities laws. A concept release was issued during 1996 to solicit comment on the best means of improving the regulation of the capital formation process while maintaining or enhancing investor protection.[17] The concept release solicited comment on several different approaches, such as:

- The recommendation of the Advisory Committee on the Capital Formation and Regulatory Processes that a ''company registration'' approach be adopted; [18]
- Modifications to the existing shelf registration system;
- Reforms that would liberalize the treatment of unregistered securities; and
- An approach that would involve deregulation of offers.

Comment also was requested about any other approaches that should be considered.

The participants will discuss the conceptual issues raised by the release and the comments received and consider any changes that should be made in the regulation of securities offerings.

E. Plain English; Disclosure Simplification

On March 5, 1996, the Commission published the Report of the Task Force on Disclosure Simplification (the ''Task Force Report''). The Task Force Report includes several recommendations intended to reduce the costs of raising capital by both smaller and seasoned companies.

One major concern of the Task Force Report was the lack of readability of prospectuses and other disclosure documents. The Task Force Report criticized prospectuses for their dense writing, legal boilerplate and repetitive disclosures and recommended using plain English disclosure to improve the readability of prospectuses. On January 22, 1998, the Commission adopted rule amendments that require the use of plain English writing principles when drafting the front part of prospectuses, namely, the cover page, summary and risk factors sections of these documents.[19] These principles include: Active voice; short sentences; everyday language; tabular presentation or ''bullet lists'' for complex material, if possible; no legal jargon or highly technical business terms; and, no multiple negatives. This change becomes effective October 1, 1998. Conferees will discuss the plain English initiative, including federal and state coordination needed to facilitate implementation of the initiative.

F. Electronic Delivery of Disclosure Documents

With the relatively recent growth in the popularity of the Internet, issuers of securities have begun to post securities offering materials on the Internet. Both the Commission and NASAA have addressed the impact of electronic media on the securities offering process. NASAA adopted a resolution concerning Internet communications in January 1996 that encouraged the states to exempt Internet offers from the registration provisions of their securities laws, if certain conditions are met. Based on state responses to the Uniformity Study, 33 states reported they have adopted NASAA's model exemption while three other states are planning to adopt or considering adoption of the model exemption. Another eight states said they have their own unique exemptions for Internet offers.

The Commission believes that the use of electronic media to deliver or transmit information under the federal securities laws should be at least equivalent to paper delivery. The Commission has issued interpretive releases and rules addressing the use of electronic media.[20]

The participants will discuss the impact of electronic technology on the capital formation process and consider the nature and extent of regulatory changes to accommodate the use of that technology in securities offerings.

G. Registration of Securities on Form S–8

Form S–8, generally speaking, is an abbreviated registration statement form under the Securities Act used to register the securities of an issuer to its employees in a primarily compensatory context. Form S–8 was expanded in 1990 to make the form available for offers and sales of securities to consultants and advisors who render *bona fide* services to the issuer if those services are not rendered in connection with offers or sales of securities in a capital-raising transaction. Since that change, the Commission has become aware of the improper use of the form to distribute securities to the public. To address this abuse, the Commission has proposed to expand the form requirements to provide that the services rendered by a consultant or advisor must not directly or indirectly promote or maintain a market for the issuer's securities.[21] Other changes to the form also were proposed. Participants will discuss this proposal and how it will affect coordination between the states and the Commission.

H. Year 2000 Disclosure Issues

The Commission published Staff Legal Bulletin No. 5 in October 1997 (revised in January 1998) which addresses the disclosure requirements of companies facing electronic problems caused by the Year 2000. The statement contains the Commission's views concerning companies' disclosure obligations about anticipated costs, problems, and uncertainties associated with this issue. Because of the potential effects of this matter on future operating results and financial condition, companies should consider whether the matter should be addressed in their ''Management's Discussion and Analysis'' and ''Description of Business'' disclosures. The conference participants will consider the extent of this issue and discuss how to require and review disclosures on this matter in a consistent manner.

(2) Market Regulation Issues

A. Broker-Dealer Books and Records

Section 103 of the 1996 Act prohibits any state from imposing broker-dealer books and records requirements that are different from or in addition to the Commission's requirements. In addition, the same section directs the Commission to consult periodically with state securities authorities concerning the adequacy of the Commission's requirements. The Commission's original proposal to amend Rules 17a–3 and 17a–4 [22] resulted from discussions between NASAA representatives and the Commission about the adequacy of the existing broker-dealer books and records

[17] Securities Act Release No. 7314 (July 25, 1996) (61 FR 40044).

[18] On July 24, 1996, the Advisory Committee on the Capital Formation and Regulatory Processes presented its report recommending a new approach to regulating securities offerings of public companies. This new approach would switch from the current transactional registration system to a company registration system.

[19] Securities Act Release No. 7497 (January 28, 1998) (63 FR 6370).

[20] Securities Act Release No. 7233 (October 6, 1995) (60 FR 53458), Securities Act Release No. 7289 (May 9, 1996) (61 FR 24652).

[21] Securities Act Release No. 7506 (February 17, 1998) (63 FR 9648).

[22] 17 CFR 240.17a–3 and 240.17a–4.

requirements.[23] The proposed amendments clarified, modified, and expanded the Commission's record-keeping requirements with respect to purchase and sale documents, customer records, associated person records, customer complaints, and certain other matters. In addition, the proposed amendments specified certain types of books and records that broker-dealers must make available in their local offices. In consideration of the substantial number of organizations that expressed interest in commenting on the proposed amendments, the Commission extended the comment period through March 31, 1997.

The Commission received 175 written comments in response to the release proposing the amendments. Broker-dealers, trade associations, and law firms representing broker-dealers submitted 110 of the comment letters. State securities regulators and NASAA accounted for 33 of the comment letters. The majority of these comment letters opposed the proposed amendments. The balance of the comment letters received were from other individuals or entities interested in the proposed amendments and expressed varying degrees of support and opposition for the proposed amendments. The Commission staff has been analyzing the suggestions made in the comment letters, and will recommend that the Commission repropose the amendments. The participants at the Conference will discuss these efforts to amend Rules 17a–3 and 17a–4.

B. State Licensing Requirements

The 1996 Act directed the Commission to conduct a study of the impact of disparate state licensing requirements on associated persons of registered broker-dealers and the methods for states to attain uniform licensing requirements for such persons. The Commission was required to consult with the self-regulatory organizations (''SROs'') and the states, and to prepare and submit a report to Congress by October 11, 1997. During the latter part of 1996 and in 1997, the Commission staff consulted with the SROs, NASAA, the state securities authorities, and members of the securities industry to determine the extent to which state licensing requirements differed and the effect of different state requirements and procedures upon associated persons and broker-dealers. The Commission submitted its report to Congress on October 10, 1997.[24]

The Commission found that the states have achieved substantial uniformity in their licensing requirements and procedures. However, the Commission believes that state licensing procedures could be streamlined to a greater extent and that the states could attain this goal without sacrificing the protection of their citizens. Therefore, the Commission recommended in its report that the states work together to achieve greater uniformity in their licensing requirements and procedures and, in this regard, recommended certain areas that may benefit from the implementation of more consistent or uniform requirements, or from further study by the states. The participants at the Conference will discuss the states' views on achieving greater uniformity in their licensing requirements and procedures.

C. Central Registration Depository (''CRD'') Redesign

The CRD system is a computer system operated by the NASD that is used by the Commission, the states, and the SROs primarily as a means to facilitate registration of broker-dealers and their associated persons. The NASD is in the process of implementing a comprehensive plan to modernize the CRD and to expand its use by federal and state securities authorities as a tool for broker-dealer regulation. As a result of the NASD's efforts, the modernized CRD system ultimately is expected to provide the Commission, the SROs, and state securities authorities with: (i) streamlined capture and display of data; (ii) better access to registration and disciplinary information through the use of standardized and specialized computer searches; and (iii) electronic filing of uniform registration and licensing forms, including Forms U–4, U–5, BD, and BDW.

In the past year, the NASD decided that the Internet should become an integral component of the CRD modernization effort. Accordingly, the NASD submitted, and the Commission approved, a rule proposal that expands the NASD public disclosure program by amending the Interpretation of NASD Rule 8310 to include electronic inquiries as well as written and telephone inquiries.

Earlier this year, the NASD and the Commission issued releases adopting interim Forms U–4, U–5, and BD that incorporated previously-adopted language into a format compatible with current CRD technology. The NASD's proposed effective date of February 17, 1998, for these amended forms was changed to March 16, 1998, due to a request from the Securities Industry Association to allow firms more time to prepare their systems. The Commission also has made March 16, 1998, the effective date for implementation of the interim Form BD. The NASD expanded their public disclosure program also to reflect the additional disclosure requirements of the interim Forms U–4 and BD.

The participants at the Conference will discuss the CRD modernization process, including the interim Forms U–4, U–5, and BD.

D. Penny Stocks/Micro-cap Fraud

Rule 15c2–11 under the Securities Exchange Act of 1934 (the ''Exchange Act'') requires a broker-dealer to review current information about an issuer before it publishes a quotation for the issuer's security in the non-Nasdaq over-the-counter markets. Because of the rule's ''piggyback'' provision, generally only the first broker-dealer has to review this information. Once the security is quoted regularly for 30 days, other broker-dealers can ''piggyback'' off those quotes without reviewing any information about the issuer.

On February 17, 1998, the Commission proposed amendments to Rule 15c2–11 that would strengthen the rule by: (1) Eliminating the piggyback provision, so that *all* broker-dealers must review issuer information before initiating or resuming quotations for OTC securities and thus independently evaluate that information; (2) requiring market makers publishing *priced* quotations to review updated issuer information annually, so that they are made aware of recent significant changes in the issuer's ownership, operations or financial condition; (3) requiring broker-dealers to document their compliance with the rule; (4) requiring broker-dealers to document information about significant relationships involving the issuer and the broker-dealer (including any arrangements involving the payment of compensation by the issuer or others for the purpose of publishing quotations); (5) requiring broker-dealers to review more information than is currently required when they publish quotes for non-reporting issuers' securities, including information about insiders' and promoters' recent disciplinary histories, so that broker-dealers will be alert to possible ''red flags'' involving the issuer, and about recent significant events involving the issuer, such as a

[23] Securities Exchange Act Release No. 37850 (October 22, 1996) [61 FR 55593].

[24] Study of State Licensing Requirements for Associated Persons of Broker-Dealers (October 10, 1997).

change in control, merger or acquisition, bankruptcy proceedings, or the delisting from an exchange or Nasdaq; (6) eliminating the requirement to obtain financial statements for prior years for those issuers that are emerging from bankruptcy; (7) allowing broker-dealers to review and retain issuer information electronically for information available on EDGAR; and (8) promoting greater availability of Rule 15c2–11 information by requiring broker-dealers to provide the information to anyone who requests it and by encouraging the development of central repositories for this information.[25]

The goals of the amendments are to deter fraudulent or manipulative quotations for OTC securities, improve the integrity of quotations for OTC securities, enhance broker-dealer responsibility for quotations for OTC securities, and provide market professionals, investors, and others with greater access to issuer information. The participants will discuss the recent proposals and the effects of such proposals, if adopted, and other ways to promote investor protection in the OTC market arena.

E. Arbitration

The NASD submitted to the Commission rule filings that focus on the eligibility rule, whether punitive damages should be capped in arbitration, whether fees should be increased, and whether employees should be required under NASD rules to submit statutory employment discrimination disputes to arbitration. In May 1997, the Commission approved a proposal by the NASD that: (1) Raises the ceiling for disputes to be eligible for resolution by a single arbitrator under simplified arbitration procedures to $25,000, and (2) raises the ceiling for disputes eligible for resolution by a single arbitrator under standard arbitration procedures to $50,000.[26]

The NASD filings resulted in part from its work with the Securities Industry Conference on Arbitration (''SICA''). The SICA continues its efforts to develop, among other things, a ''list selection'' method for appointing arbitrators.

The participants at the Conference are likely to address some or all of the above approaches for strengthening the securities arbitration process.

F. NASD Proposals

The NASD has undertaken several regulatory initiatives in the past year. A new proposed rule would require a member firm to tape record conversations between its customers and registered representatives if it hired a significant percentage of individuals from Disciplined Firms. Disciplined Firms are defined as firms that have been expelled by a self-regulatory organization or that have had their registrations revoked by the Commission.[27]

A proposed rule amendment would require clearing firms to (a) Forward customer complaints about an introducing firm to the introducing firm's designated examining authority, (b) notify complaining customers that they have the right to transfer their accounts to another broker-dealer, (c) provide introducing firms with a list of exception reports to help them supervise their activities, and (d) assume liability for any mistakes or fraud made by an introducing firm that issues checks drawn on the clearing firm's account.[28]

Another new rule (Rule 1150) would provide NASD members with a qualified immunity in arbitration proceedings for statements made in good faith in certain disclosures filed with the NASD on Forms U–4 and U–5. The proposal, as described in an NASD Notice to Members, would require firms to give a terminated employee an opportunity to review the proposed Form U–5 language at least 10 days before it was filed with the NASD; any amendments would also be given to the employee before being filed.[29]

These three NASD initiatives have been filed with the Commission, and are currently under review. Other initiatives still being considered by the NASD include the following three proposals.

A proposed interpretive rule would require all unregistered employees of an NASD member firm who cold call prospective customers, either to solicit the purchase of securities or to market the member firm's services generally, to register as representatives.[30] A proposed rule amendment would limit the securities that a member can quote on the OTC Bulletin Board to the securities of issuers that are registered under Section 12 of the Exchange Act, certain insurance companies, and registered closed-end investment companies, but only if they are current in their reporting obligations.[31] Finally, a proposed new rule would require a member to review current financial statements of an issuer prior to recommending a transaction in the issuer's OTC securities to a customer, and to deliver a disclosure statement to its customer prior to making an initial purchase of an OTC security for the customer and annually thereafter.[32]

The participants at the Conference will discuss the status of these proposals, the comments received to date, and their implications for small businesses and NASAA members.

G. Year 2000

The Commission has been very active in addressing the potential problems for securities industry computer systems as a consequence of the date change on January 1, 2000 (''Year 2000''). For example, in October 1997, Chairman Levitt sent a letter to all registered transfer agents and broker-dealers emphasizing the importance of implementing plans and devoting adequate resources to ensure that their computer systems are ready for the Year 2000. The Chairman encouraged firms to have all necessary modifications in place by the end of 1998 to allow for participation in industry-wide testing scheduled for 1999. On January 7, 1998, the Commission staff sent a letter to all non-bank registered transfer agents which requested documentation regarding their progress in Year 2000 preparations. The Commission is coordinating efforts with the NYSE and the NASD, both of which have surveyed their member firms for similar information on Year 2000 preparations. On March 5, 1998, the Commission issued releases to solicit comment on proposed rule amendments and a proposed rule under the Exchange Act which would require certain broker-dealers and all non-bank registered transfer agents to file reports with the Commission regarding their Year 2000 preparations.[33]

During the past year, the Commission supported the industry's efforts to establish a testing program to aid firms and SROs in preparing for potential computer problems associated with the Year 2000. The testing program involves bilateral testing, in which an SRO or utility conducts one-on-one testing with its members or another SRO or utility. Nasdaq, for example, intends to conduct

[25] Securities Exchange Act Release No. 39670 (February 17, 1998) (63 FR 9661).

[26] Securities Exchange Act Release No. 38635 (May 14, 1997) (62 FR 27819).

[27] Securities Exchange Act Release No. 39361 (November 26, 1997) (62 FR 64422).

[28] Securities Exchange Act Release No. 39349 (November 21, 1997) (62 FR 63589).

[29] NASD Notice to Members 97–77 (November 1997).

[30] NASD Notice to Members 98–58 (September 1997).

[31] NASD Notice to Members 98–14 (January 1998).

[32] NASD Notice to Members 98–15 (January 1998).

[33] Securities Exchange Act Release Nos. 39724 (March 5, 1998) (63 FR 12056) and 39726 (March 5, 1998) (63 FR 12062).

bilateral testing with the NYSE, the National Securities Clearing Corporation, and several broker-dealers. This type of testing is expected to be completed by the end of 1998. Bilateral testing will help to ensure that communication and data exchanges between all involved entities will not be disrupted. The testing program also calls for industry-wide, or street-wide, testing, in which industry participants will test sample trades from the trade date through settlement. This latter type of testing will begin in March 1999 and end in September 1999. The Commission staff has encouraged all SROs to adopt appropriate testing plans to ensure that they and their member organizations are prepared for the millennium.

The participants at the Conference will discuss the issues, testing programs, and rule proposals involved in ensuring that the securities industry's computer systems are ready for the Year 2000.

H. Examination Issues

State and federal regulators also will discuss various examination-related issues of mutual interest, including: Summits and examination coordination; training; micro-cap issues; independent contractors and variable annuities.

(3) Investment Management Issues

A. Division of Regulatory Authority

Title III of the 1996 Act, the Investment Advisers Supervision Coordination Act, included amendments to the Investment Advisers Act of 1940 (''Advisers Act'')[34] that divided regulatory responsibility for investment advisers between the Commission and state securities regulators. The law generally requires advisers that have assets under management of $25 million or more, or that advise registered investment companies to register with the Commission;[35] and requires advisers that have assets under management of less than $25 million to register with the appropriate state securities authorities.

On May, 15, 1997, the Commission adopted rules to implement this division of regulatory authority,[36] including a requirement that each Commission-registered adviser file a Form ADV–T with the Commission not later than July 8, 1997, indicating whether the adviser was eligible for continued registration with the Commission and, if not, withdrawing from Commission registration.[37] As of January 30, 1998, the Commission had received Form ADV–T's from 7,476 advisers indicating that they were eligible for registration with the Commission, and from 11,764 advisers withdrawing their registrations. Most states have also now amended their securities laws and adopted new rules to implement the division of authority. The conferees will discuss and coordinate state and federal implementation of the 1996 Act.

B. Electronic Filing System

One of the requirements of the 1996 Act is for the Commission to establish and maintain a ''readily accessible telephonic or other electronic process'' to receive public inquiries about the disciplinary histories of investment advisers and persons associated with investment advisers.[38] In order to implement this provision and to provide an efficient and convenient means for filing and retrieving information about investment advisers, the Commission is working with NASAA and the state securities authorities to develop a one-stop electronic filing system to be used by investment advisers to submit their initial registrations and to update the information they are required to provide. Since the information will be filed electronically, it will create an electronic data base that will be easily accessible by both the regulators and the public. As currently planned, all of this information will be posted on an Internet web site and readily available to the public. This will allow clients and prospective clients of investment advisers to quickly obtain not only disciplinary information, but a broad range of other important information as well. The conferees will discuss the progress to date in creating this new electronic filing system and offer ideas about how the system can be made most efficient and effective.

C. Revised Disclosure Forms

The Commission and NASAA are also working on new, easier-to-use forms for investment adviser filings. These new forms should provide more useful information both to the Commission and the state securities regulators, and to clients and prospective clients of investment advisers. The new disclosure form for clients and prospective clients should also encourage advisers to provide clear and complete disclosures in plain English. Disclosures will not be effective if clients cannot understand them or if they are presented in a way that discourages clients from reading them. The conferees will consider and discuss ways in which the forms can be made most useful to clients and prospective clients of investment advisers, as well as to state and federal regulators.

D. Examination Issues

State and federal regulators also will discuss various examination-related issues of mutual interest, including: Cooperation between Commission and state adviser programs; sharing information about past examinations, advisers moving from federal to state registration and vice versa, and information potentially leading to cause examinations; and examinations to verify an adviser's qualification for federal or state registration.

(4) Enforcement Issues

In addition to the above topics, state and federal regulators will discuss various enforcement-related issues which are of mutual interest.

(5) Investor Education

The participants at the Conference will discuss investor education and potential joint projects in some of the working group sessions. The Commission currently pursues a number of programs to educate investors on how to invest wisely and to protect themselves from fraud and abuse. The states and NASAA have a longstanding commitment to investor education, and the Commission intends to coordinate and complement those efforts to the greatest extent possible. Our most recent joint effort includes the launch of the ''Facts on Saving and Investing Campaign,'' a national public awareness campaign to motivate Americans to save and invest wisely. During the week of March 29 to April 4, 1998, federal agencies, securities regulators, consumer groups, the financial industry, and the media will join together to conduct educational events in our communities and schools and to announce future initiatives. Securities regulators from twenty-one nations in North, Central, and South America and the Caribbean will also offer investor education programs in their countries that week.

[34] 15 U.S.C. 80b–1 *et seq.*

[35] Advisers Act section 203A(a), 15 U.S.C. 80b–3a. The Advisers Act also provides for registration with the Commission of advisers that have their principal office and place of business in a state that has not enacted an investment adviser statute (currently, Colorado, Iowa, Ohio, and Wyoming), or that have their principal office and place of business outside the United States. In addition, the Commission has adopted rules exempting four categories of investment advisers from the prohibition on registration with the Commission. *See* Rule 203A–2, 17 CFR 275.203A–2.

[36] Investment Advisers Act Rel. No. 1633 (May 15, 1997) (62 FR 28112).

[37] Rule 203A–5, 17 CFR 275.203A–5.

[38] 1996 Act section 306.

(6) General

There are a number of matters which are applicable to all, or a number, of the areas noted above. These include EDGAR, the Commission's electronic disclosure system, rulemaking procedures, training and education of staff examiners and analysts and sharing of information.

The Commission and NASAA request specific public comments and recommendations on the above-mentioned topics. Commenters should focus on the agenda but may also discuss or comment on other proposals which would enhance uniformity in the existing scheme of state and federal regulation, while helping to maintain high standards of investor protection.

By the Commission.

Dated: April 9, 1998.

Margaret H. McFarland,

Deputy Secretary.

[FR Doc. 98–9883 Filed 4–14–98; 8:45 am]

BILLING CODE 8010–01–P

SECURITIES AND EXCHANGE COMMISSION

[Release No. 34–39846; File Nos. SR–NYSE–98–06; SR–Amex–98–09; BSE–98–06; SR–CHX–98–08; SR–NASD–98–27; and SR–Phlx–98–15]

Self-Regulatory Organizations; Order Granting Approval of Proposed Rule Change by the New York Stock Exchange, Inc.; Order Granting Approval of Proposed Rule Change and Notice of Filing and Order Granting Accelerated Approval of Amendment No. 1 Thereto by the American Stock Exchange, Inc.; Notice of Filing and Order Granting Accelerated Approval of Proposed Rule Changes by the Boston Stock Exchange, Inc., Chicago Stock Exchange, Inc., and National Association of Securities Dealers, Inc.; Notice of Filing and Order Granting Accelerated Approval of Proposed Rule Change and Amendment No. 1 Thereto by the Philadelphia Stock Exchange, Inc.; Relating to Modifications to the Market-Wide Circuit Breaker Provisions (''Trading Halts Due to Extraordinary Market Volatility'')

April 9, 1998.

I. Introduction

Pursuant to Section 19(b)(1) of the Securities Exchange Act of 1934 (''Exchange Act'' or ''Act''),[1] and Rule 19b–4 thereunder,[2] the New York Exchange, Inc. (''NYSE''), the American Stock Exchange, Inc. (''Amex''), the Boston Stock Exchange, Inc. (''BSE''), the Chicago Stock Exchange, Inc. (''CHX''), the Philadelphia Stock Exchange, Inc. (''Phlx'') (individually, ''Exchange'' and collectively, ''Exchanges''), and the National Association of Securities Dealers, Inc. (''NASD''), submitted to the Securities and Exchange Commission (''SEC'' or ''Commission''), proposed rule changes relating to certain market-wide circuit breaker provisions.

Notices of the NYSE's and Amex's proposed rule changes were published for comment in the **Federal Register** on February 23, 1998 and February 27, 1998, respectively.[3] Four comment letters were received on the proposals.[4] On April 1, 1998, Amex filed an amendment to the proposed rule change.[5] On April 6, 1998, Phlx also filed an amendment to the proposed rule change.[6] This order approves the proposed rule changes of the NYSE and the Amex. This order also approves, on an accelerated basis, Amex's amendment to the proposed rule change. As discussed below, the Commission is also granting accelerated approval of the proposed rule changes of the BSE, CHX, NASD, and Phlx (as amended).

II. Background

Circuit breakers are coordinated cross-market trading halts that are intended to help avoid systemic breakdown when a severe one-day market drop of historic proportions prevents the financial markets from operating in an orderly manner. A decade ago, the securities and futures markets, in response to the most destabilizing U.S. market drop in over half a century,[7] introduced circuit breakers in order to offer investors and the markets an opportunity to assess information and positions when the markets experienced a severe, rapid decline.

In 1988, the Commission approved the Exchanges' circuit breaker proposals, along with the NASD's circuit breaker policy statement.[8] These rules provided for a one hour market-wide trading halt if the Dow Jones Industrial Average (''Dow'')[9] declined by 250 points from its previous day's close, and a two hour halt if, on that same day, it fell 400 points. Amendments approved by the SEC in July 1996 reduced the duration of the 250 and 400 points halts to one-half hour and one hour, respectively.[10] Amendments approved in January 1997 increased the trigger values to 350 and 550 points.[11] The Commission believed that the circuit breaker proposals would provide market participants with an opportunity during a severe market decline to reestablish an equilibrium between buying and selling interest in a more orderly fashion. The futures exchanges also adopted analogous trading halts to provide coordinated means to address potentially destabilizing market volatility.[12]

On October 27, 1997, the Dow (and U.S. markets generally) experienced a decline of 554 points, or 7.2%, to close at 7161.15. This marked the first time circuit breakers were triggered since their adoption. The first circuit breaker of one-half hour was triggered at 2:36

---

[1] 15 U.S.C. 78s(b)(1).

[2] 17 CFR 240.19b–4.

[3] See Exchange Act Release Nos. 39666 (February 13, 1998), 63 FR 9034 (February 23, 1998) (NYSE); 39689 (February 20, 1998), 63 FR 10054 (February 27, 1998) (Amex).

[4] See letter to Kaye Williams, Congressional and Legislative Affairs Commission, from Mark I. Klein (forwarded by Senator Diane Feinstein), dated February 11, 1998 (''Klein Letter''). See letters to Margaret H. McFarland, Deputy Secretary, Commission, from Options Clearing Corporation, dated March 23, 1998 (''OCC Letter'') from Chicago Board Options Exchange, Inc. (''CBOE''), dated March 23, 1998 (''CBOE Letter''). See letter to Kathryn Fulton, Congressional and Legislative Affairs, Commission, from Charles Wayne Emerson (forwarded by Senator Richard Shelby), dated February 18, 1998 (''Emerson Letter'').

[5] Amex Amendment No. 1 corrects a spelling error in the text of the proposed rule change. See Letter to Christine Richardson, Division of Market Regulation, Commission, from Michael Cavalier, Amex, dated April 1, 1998 (''Amex Amendment No. 1'').

[6] Phlx Amendment No. 1 replaces the term ''below'' with the term ''before'' in paragraph (a)(i) of the text of the proposed rule. See Letter to Michael Walinskas, Division of Market Regulation, Commission, from Carla J. Behnfeldt, Phlx, dated April 6, 1998.

[7] On October 19, 1987, the Dow Jones Industrial Average declined 22.6%.

[8] See Exchange Act Release No. 26198 (October 19, 1988), 53 FR41637 (NYSE, Amex, NASD, and CBOE).

[9] ''Dow Jones Industrial Average'' is a service mark of Dow Jones & Company, Inc.

[10] See Exchange Act Release Nos. 37457 (July 19, 1996), 61 FR 39176 (NYSE); 37458 (July 19, 1996), 61 FR 39167 (Amex); and 37459 (July 19, 1996), 61 FR 39172 (BSE, CBOE, CHX, and Phlx).

[11] See Exchange Act Release No. 38221 (January 31, 1997), 62 FR 5871 (February 7, 1997) (NYSE, Amex, CBOE, CHX, BSE, and Phlx). The Commission approved each of the Exchanges' revised circuit breaker rules on a one-year pilot basis which expired on January 31, 1998. See *id.* at 5874.

[12] See letters to Jean A. Webb, Secretary, Commodity Futures Trading Commission (''CFTC''), from Todd E. Petzel, Vice President, Financial Research, Chicago Mercantile Exchange (''CME''), dated September 1, 1988; from Paul J. Draths, Vice President and Secretary, Chicago Board of Trade (''CBOT''), dated July 29, 1988; from Milton M. Stein, Vice President, Regulation and Surveillance, New York Future Exchange (''NYFE''), dated September 2, 1988; and Michael Braude, President, Kansas City Board of Trade (''KCBT''), dated August 10, 1988.

p.m. when the Dow declined 350 points from the previous day's closing value. After the market reopened at 3:06 p.m., the Dow continued to decline another 200 points, triggering the second circuit breaker at 3:30 p.m. Because the second circuit breaker was triggered at 3:30 p.m., within the last hour of trading, the market was closed for the remainder of the day. It has been suggested that the triggering of the circuit breakers on October 27, 1997, was needless at best, and inappropriately halted trading. In addition, the circuit breakers' low point value level, close proximity to each other, and the fact that the second circuit breaker would close the market for the remainder of the day, may have contributed to selling pressure after the first halt was lifted. This triggering of the circuit breakers when the markets were operating smoothly prompted the markets to re-evaluate the operation and function of circuit breakers.

In January 1998, as a result of the events of October 27, 1997, the Exchanges adopted interim changes to the circuit breaker rules.[13] These changes provide, in part, that if the Dow falls 350 or more points below its previous trading day's closing value, trading in all stocks and equity-based options on the Exchanges will halt for one half-hour, except that if the 350 or more point decline is reached at or after 3:00 p.m.,[14] there will be no halt in trading. Furthermore, if, on the same day, the Dow drops 550 or more points from its previous trading day's close, trading in all stocks and equity-based options on the Exchanges will halt for one hour, except that if the 550 point decline occurs after 2:00 p.m., but before 3:00 p.m., the halt will be one-half hour instead of one hour. If, however, the 550 point drop occurs at or after 3:00 p.m., the Exchanges and Nasdaq will close for the remainder of the day. These interim changes were adopted only until the markets could agree on modifications to raise significantly the circuit breaker trigger levels. Subsequently, the markets agreed to the proposal being approved today, which is described below.

III. Description of the Proposal

Because the current circuit breaker provisions have been approved only until April 30, 1998, and because there is a general consensus among those in the securities industry that the current circuit breaker trigger levels are too low and too close together, the Exchanges have proposed to revise the levels to address these concerns.

The Exchanges[15] propose to establish new circuit breaker trigger levels for a one-day decline of 10%, 20% and 30% of the Dow, to be calculated at the beginning of each calendar quarter, using the average closing value of the Dow for the previous month to establish specific point values for the quarter.[16] Each trigger will be rounded to the nearest 50 points.[17]

Before 2:00 p.m.,[18] the halt for a 10% decline will be one hour. At or after 2:00 p.m. but before 2:30 p.m., the halt will be for one-half hour. If the 10% trigger value is reached at or after 2:30 p.m., the market will not halt at the 10% level and will continue trading.

The halt for a 20% decline will be two hours if triggered before 1:00 p.m. At or after 1:00 p.m. but before 2:00 p.m., the halt will be for one hour. If the 20% trigger value is reached at or after 2:00 p.m., trading will halt for the remainder of the day.[19] If the market declines by 30%, at any time, trading will be halted for the remainder of the day.

The futures exchanges trading stock index futures have proposed substantively identical circuit breaker proposals with the CFTC to halt trading in such contracts.[20] As discussed further below, the CME's proposal also would raise its daily price limit for the S&P 500 index futures from 90 points to a maximum daily downward price limit of 20%. Under the Exchanges' proposals, prior to 2:00 p.m., the securities markets will be permitted to trade in the range of 20% to 30% down; however, the CME's proposal will not permit the S&P 500 stock index futures market to trade below 20% down. Furthermore, the CME's proposal states that variation margin settlement values will be based on the limit price, rather than on a price derived from the closing index value. In other words, CME settlement values would be based on the 20% limit price, regardless of the prices at which the underlying stocks were trading at the close.

[13] See Exchange Act Release No. 39582 (January 26, 1998), 63 FR 5408 (February 2, 1998) (order granting accelerated approval of proposed rule changes by the NYSE, Amex, BSE, CHX, and Phlx). The proposed rule changes became effective on February 2, 1998 and were approved on a pilot basis until April 30, 1998. Although the NASD's general policy statement concerning circuit breakers expired on December 31, 1997, the NASD submitted a letter to the Commission stating that it would continue to follow, upon request from the Commission, a market-wide trading halt during the triggering of the intermarket circuit breakers. See Letter to Howard L. Kramer, Senior Associate Director, Office of Market Supervision, Division of Market Regulation, Commission, from Richard Kecthum, Chief Operating Officer and Executive Vice President, NASD, dated January 23, 1998.

[14] All time references are to Eastern time.

[15] The CBOE, Cincinnati Stock Exchange, Inc. (''CSE''), and the Pacific Exchange, Inc. (''PCX'', formerly PSE) have general rules that require them to halt trading during a triggering of the intermarket circuit breakers. Consequently, they do not need to file conforming rule changes because their circuit breaker halts will conform automatically to the halt periods adopted by the other exchanges. *See* Letters to Howard L. Kramer, Senior Associate Director, Office of Market Supervision, Division of Market Regulation, Commission, from Adam W. Gurwitz, Vice President Legal and Corporate Secretary, CSE, dated March 9, 1998; from David P. Semak, Vice President, Regulation, PCX, dated April 1, 1998; and CBOE Letter *supra* note 4.

Because the NASD's policy statement has expired, it is filing a proposed rule change to codify, in Interpretive material, on a two-year pilot basis, the NASD's agreement to halt, upon SEC request, all domestic trading in both securities listed on Nasdaq and all equity and equity-related securities trading over-the-counter market, should other major securities markets declare a market-wide trading halt upon the triggering of the circuit breakers. See File No. SR–NASD–98–27. The Commission notes that it has a standing request with the NASD that the NASD halt trading as quickly as practicable whenever the NYSE and other equity markets have suspended trading. The Exchanges' and the NASD's proposed rule filings do not affect the Commission's standing request.

[16] The NYSE has stated that its Data and Statistics Department will calculate the point values for the circuit breaker trigger levels after the close of trading on the last day of the quarter. The NYSE will disseminate the levels to the media that evening. Before the opening on the next trading day, the NYSE's Floor Operations Division will disseminate the new trigger levels via its ''hoot and holler system'' to all other U.S. market centers which trade stocks, stock options, stock index options, stock index futures and options on such futures, as well as to the SEC and CFTC. The circuit breaker trigger levels also will be disseminated as a message on the ticker tape and as a CMS broadcast to SuperDOT subscribers. The NYSE's Market Surveillance Division also will issue an Information Memorandum. *See* Letter to Michael Walinskas, Senior Special Counsel, Division of Market Regulation, Commission, from Agnes Gautier, Vice President, Market Surveillance, NYSE, dated March 5, 1998 (''NYSE Letter'').

[17] For example, if the average of the Dow closing values for the previous month is 7700, 10% of such average would be 770; this would be rounded to the nearest 50 points to create a circuit breaker trigger level of 750. In addition, if a trigger level is midway between two points, it will be rounded down, *e.g.*, 825 would be rounded to 800, and 875 would be rounded to 850. See *id*.

[18] All time references are to Eastern time.

[19] The NYSE has requested that the Commission extend the ''safe harbor'' provisions of rule 10b–18 under the Exchange Act to cover corporate repurchases effected at the reopening on the day of the halt, during the last half-hour prior to the scheduled close of trading on the day of the halt, and at the next day's opening if the market-wide halt is in effect at the scheduled close of trading, provided that the other restrictions in Rule 10b–18 are met in the execution of any repurchase order. See Letter to Jonathan Katz, Secretary, Commission, from James E. Buck, Senior Vice President and Secretary, NYSE, dated January 8, 1998. The Commission currently is evaluating this request.

[20] See Letters to Jean A. Webb, Secretary, CFTC, from Richard J. McDonald, Vice President, Research, CME, dated March 9, 1998 (''CME Letter''); from Paul J. Draths, Vice President and Secretary, CBOT, dated March 13, 1998; from Jean Butler Furlan, Chief Economist, NYFE, dated February 12, 1998; and from Jeff C. Borchardt, Senior Vice President, KCBT, dated March 10, 1998 (''KCBT Letter''). See *infra* part V.

IV. Summary of Comments

The Commission received four comments on the Exchanges' proposals.[21] The Klein and Emerson Letters both opposed the Exchanges' proposals to increase the circuit breaker trigger levels to 10%, 20% and 30%.[22] The OCC Letter generally supported the Exchanges' circuit breaker proposals except insofar as they would allow the market to reopen following a 20% decline prior to 2:00 p.m. EST. The CBOE Letter generally supported the proposals. Both the OCC and CBOE Letters, however, expressed concern over the CME's rule change proposal,[23] noting features of the proposal that would result in less than complete coordination among the stock, options and futures markets.

V. Commission Findings and Conclusions

After careful review of the Exchanges' proposed amendments to the circuit breaker rules and for the reasons discussed below, the Commission finds that the proposed rule changes are consistent with the requirements of the Act and the rules and regulations thereunder applicable to both a national securities exchange and a national securities association, and, in particular with the requirements of Sections 6(b)(5), 11A(a)(1) and 15A(b)(6).[24] The proposals are designed to promote just and equitable principles of trade, to remove impediments to and perfect the mechanism of a free and open market and a national market system, to foster competition and coordination with persons engaged in regulating securities, and to protect investors and the public interest.

In general, the Commission believes that markets function best when they are open and unencumbered by artificial constraints like circuit breakers. For this reason, the Commission believes that mechanisms like circuit breakers, which impede the natural functioning of markets, should only be imposed in the most extreme circumstances. For circuit breakers to be of any value, they should only be used on those rare occasions when the market decline is of historic proportions and, as a result, the markets and supporting technology face broad disorder.

Circuit breakers were meant from their inception to be triggered only in truly extraordinary circumstances—*i.e.*, a severe market decline when the prices have dropped so dramatically that liquidity and credit dry up, and when prices threaten to free fall. When the circuit breakers initially were adopted in 1988, they were triggered by 250 and 400 point declines in the Dow, which at that time represented declines of approximately 12% and 19%, respectively. As a result of the dramatic increase in the Dow over the past decade, the present circuit breaker levels of 350 and 550 points represent declines of only 4% and 6%.[25] The likelihood has increased significantly that these existing circuit breakers will trigger during less than extraordinary market declines. In fact, the drop that occurred on October 27, 1997, did not represent the type of extraordinary decline that circuit breakers were meant to halt.[26] When the circuit breakers were activated, the markets were operating efficiently, and there was no threat of imminent market breakdown. The Commission believes that the current circuit breakers trigger levels of 350 and 550 are too low and too close together, and have the potential to cause premature or unnecessary trading halts.[27] Indeed, when the Commission approved the raising of circuit breakers last year from 250/400 points to 350/550 points, it noted that such a raise, while an improvement over existing levels, was insufficient and that the markets would need to devise substantially higher trigger levels.[28]

In considering the Exchanges' proposals to modify the circuit breaker trigger levels, the Commission also has taken into account the guidelines expressed by the Working Group on Financial Markets (''Working Group'') when it originally recommended the adoption of circuit breaker procedures in 1988.[29] At that time, the Working Group's Interim Report on Financial Markets stressed that the circuit breaker trigger levels should be ''broad enough to be tripped only on rare occasions, but * * * sufficient to support the ability of the payments and credit systems to keep pace with extraordinarily large market declines.''[30] The Working Group's report also cautioned that the circuit breaker trigger levels should be reviewed by market regulators periodically to reflect market levels and to adjust the point-decline triggers to ensure that market-wide halts be imposed only after extraordinary market declines.

The Commission believes that the Exchanges' current proposals of 10%, 20% and 30% circuit breaker trigger levels reflect the type of severe one-day market decline that circuit breakers are intended to address. Over the past decade, the Dow has increased to the point where the current circuit breaker trigger levels of 350 and 550 points no longer represent a significant market decline. Thus, the Commission believes that an increase in the circuit breaker trigger levels is necessary and appropriate in order to prevent the markets from closing as a result of a non-destabilizing decline. The Commission also believes that not only will the Exchanges' proposals return circuit breakers to levels consistent with their intended design and function, but that the proposed levels of 10%, 20% and 30% should not cause premature or unnecessary trading halts.

The Commission also believes that translating the 10%, 20% and 30% circuit breaker trigger levels into point valuations, as well as rounding each of the trigger point values to the nearest 50 points will provide clarity to and a better comprehension of the quarterly circuit breaker trigger levels to all market participants.[31] The Commission also finds satisfactory the methods by which the NYSE will disseminate information concerning the quarterly circuit breaker trigger levels to market participants and investors.[32] The Commission believes that these information dissemination procedures will ensure that all U.S. market centers which trade stocks, stock options, stock

[21] See *supra* note 4.

[22] *Id.*

[23] See *infra* part V.

[24] See 15 U.S.C. 78f(b), 78k–1 and 78*o*–3. In approving this rule change, the Commission notes that it has considered the proposals' impact on efficiency, competition, and capital formation, consistent with Section 3 of the Act. *Id.* at 78c(f).

[25] As of March 30, 1998, a 350 and 550 point decline in the Dow represented a percentage decline of 3.99% and 6.26%, respectively.

[26] When the 350-point trigger was reached on October 27, the stock market was down only 4.54%, a level that had been reached on 11 previous days since 1945.

[27] It has been suggested that, when the 350 point circuit breaker was triggered on October 27, 1997, and the markets closed for thirty minutes, upon the reopening, ''the existence of a second trigger only 200 points lower produced a destabilizing 'gravitational pull,' motivating market participants to sell before the second trigger was reached to avoid being locked into their positions overnight.'' See OCC Letter, *supra* note 4; see also CBOE Letter, *supra* note 4.

[28] See Exchange Act Release No. 38221 (January 31, 1997), 62 FR 5871, 5875 (February 7, 1997).

[29] The Working Group on Financial Markets was established by the President in March 1988 in response to the 1987 market break. It consists of the Secretary of the Department of the Treasury and the Chairmen of the Commission, the CFTC, and the Board of Governors of the Federal Reserve System. Its mandate is to determine the extent to which coordinated regulatory action is necessary to strengthen the nation's financial markets.

[30] See Working Group on Financial Markets, Interim Report of the Working Group on Financial Markets, May 16, 1988.

[31] See *supra* note 17 (describing how the trigger levels will be calculated).

[32] See *supra* note 16 (describing the methods by which the NYSE will disseminate information concerning the quarterly circuit breaker trigger point levels).

index options, stock index futures and options on such futures, the SEC, the CFTC, and public investors are given notice of the new quarterly circuit breaker trigger levels before the opening of trading on the next trading day following the close of trading on the last day of the quarter.

As stated above, the Commission, in general, does not favor market closings. The Commission believes that as long as the markets are functioning efficiently, they should remain open. The Commission realizes, however, that on those rare occasions of severe market decline and systemic overload, it may be necessary to provide a short pause for participants to reassess market conditions. The Commission notes that providing a brief pause in trading was the original purpose of circuit breakers. In order to achieve an orderly daily close and permit completion of market activities in a fair way, the Commission firmly believes that every attempt should be made to reopen the markets after the triggering of a circuit breaker if it is triggered early in the day.

The Commission notes that investors have come to rely on the markets being open until 4:00 p.m., and make their investment decisions on that basis. When an early close prevents investors from making their trades, resulting investment decisions become colored by uncertainty. Another concern is the uncertainty created for mutual funds in the event of an early close due to a triggered circuit breaker. Investors in mutual funds who place orders to redeem shares before 4:00 p.m. generally will receive that day's net asset value for the fund shares. When a circuit breaker closes trading for the day prematurely, investors who place orders to redeem shares may not receive that day's net asset value.[33] In addition, an early close could be disruptive to the unwinding of derivative-related index arbitrage positions.

The Commission believes that the Exchanges' proposals sufficiently address the need for the markets to remain open or to reopen during the trading day so that an orderly market close can occur. More specifically, the Exchanges' proposals strike a reasonable balance between the need to halt trading temporarily during periods of extraordinary market volatility with the need to provide for an open market place for trading securities and an orderly market close. The Commission notes that the current proposals also reflect a consensus among the Exchanges and the NASD as to the late-in-the-day timing mechanisms for the triggering of the circuit breakers. Overall, the Commission believes that the proposed changes to the circuit breaker procedures are appropriate to prevent the markets from closing for the day absent significant and extraordinary declines.

The Exchanges' proposals are contingent on other markets adopting substantively identical proposals. In this regard, the Commission notes that all of the existing U.S. stock and options exchanges, as well as the NASD, have either submitted revised circuit breaker pilot programs to reflect the NYSE proposal or have agreed to comply with the provisions of such programs.[34] The futures exchange are also adopting complementary trading halts to maintain the existing coordinated means to address potentially destabilizing market volatility.[35] The Commission notes, however, that the CME's proposal does diverge from the proposals of the securities markets and the other futures markets in one manner.[36] The CME's proposal calls for a 20% price limit to remain in effect even after the equity markets have reopened following a trading halt due to a 20% decline in the Dow.[37] In other words, the CME will not permit the futures prices to fall below 20%, whereas the securities markets could drop to a maximum of 30% after reopening from the 20% circuit breaker.

The Commission believes that a similar difference currently exists between the CME's rules and the securities markets and other futures markets in that the CME will not permit S&P 500 futures to trade below a total daily price limit of 90 S&P 500 points from the settlement price of the preceding regular trading session. In other words, under the CME's present rule, the securities markets potentially could reopen and fall further after a 550 point drop that occurs prior to 3:00 p.m., while the S&P 500 futures could not fall further because the total daily 90 point price limit in the S&P 500 futures still would remain in effect. Despite this current difference, the Commission previously has determined that the CME's current rule is substantively identical to those of the securities markets and the other futures markets.[38] Thus, the Commission believes that the CME's proposed rule change is substantively identical to those of the securities market and other futures markets for purposes of the effectiveness of other circuit breaker rules.[39]

The CBOE and OCC Letters raise a valid issue of concern regarding the CME's proposal to amend its margining procedures so that a stock index future's daily variation margin payment is capped at 20%, regardless of whether the underlying stock market has declined beyond 20%. This raises the possibility of a mismatch between the margin and capital treatment of a stock index option position and its futures hedge. The Commission urges the CME either to reconsider its proposal to cap variation margin at 20% or to work out an alternative margining procedure with the options exchanges. Nevertheless, because this issue concerns margin payments rather than the decision to halt trading, as well as the fact that the CME will permit its stock index futures to decline to a virtually historic amount (20%), the Commission does not believe that the CME's alternative proposal undermines the conclusion that the CME's circuit breaker trading halt is substantively identical to the securities markets' circuit breaker proposals.

The Commission finds good cause for approving Amex Amendment No. 1 to the proposed rule change prior to the thirtieth day after the date of publication of notice of filing thereof in the **Federal Register.** Amex Amendment No. 1 corrects a spelling error contained in the text of the proposed rule and does not substantively modify the proposal. Accordingly, the Commission believes that it is consistent with Sections 6, 11A and 19(b) of the Act to approve Amex Amendment No. 1 on an accelerated basis.

The Commission finds good cause for approving the proposed rule changes by the BSE, CHX, NASD, and Phlx, as amended, prior to the thirtieth day after the date of publication of notice of filing thereof in the **Federal Register.** Specifically, the Commission notes that the BSE's, CHX's, NASD's and Phlx's proposed rule changes are substantively identical to those proposed by the NYSE and Amex. The BSE's, CHX's, NASD's and Phlx's proposals raise no issues that are not raised by the NYSE and Amex.

[33] See also Letter to Arthur J. Levitt, Jr., Chairman, Commission, from Matthew P. Fink, President, Investment Company Institute, dated January 27, 1998 (''[C]losing the markets early could be harmful to the over 60 million mutual fund shareholders who have come to expect that the markets will close at 4:00 p.m., and that orders placed up until that time will get that day's net asset value.'').

[34] See *supra* part III.

[35] See *supra* note 20.

[36] The KCBT's proposal is nearly identical to the CME's and, therefore, also diverges from the proposals of the securities markets and other futures markets. See KCBT Letter.

[37] See CME Letter.

[38] See Exchange Act Release No. 39582 (January 26, 1998), 63 FR 5408 (February 2, 1998).

[39] In making this determination, the Commission does not want to imply that it supports the CME's price limit of 20%. Clearly, a price limit of 30% would better align the CME's stock index futures contracts with the stock and option markets.

Additionally, the Commission notes that the NYSE and Amex proposal were each published for a full notice and comment period in the **Federal Register**.[40] The Commission notes that Phlx Amendment No. 1 corrects a typographical error in the text of the proposed rule and does not substantively modify Phlx's proposal. The Commission believes that it is important that the Exchanges' circuit breaker procedures be approved simultaneously to preserve the existence of uniform market-wide circuit breaker provisions. Accordingly, the Commission believes that it is consistent with Sections 6, 11A, 15A and 91(b) of the Act to approve the BSE's, CHX's, NASD's and Phlx's, as amended, proposed rule changes on an accelerated basis.

As part of the Commission's belief that the circuit breaker mechanisms must be coordinated across the U.S. equity, futures and options markets to be effective in times of extreme market volatility, and to ensure continued market coordination, the Exchanges' proposals will become effective simultaneously beginning on April 15, 1998.

VI. Solicitation of Comments

Interested persons are invited to submit written data, views and arguments concerning the BSE, CHX, NASD and Phlx proposals; Amex Amendment No. 1; and Phlx Amendment No. 1, including whether the proposed rule changes are consistent with the Act. Persons making written submissions should file six copies thereof with the Secretary, Securities and Exchange Commission, 450 Fifth Street, N.W., Washington, D.C. 20549. Copies of the submission, all subsequent amendments, all written statements with respect to the proposed rule change that are filed with the Commission, and all written communications relating to the proposed rule change between the Commission and any person, other than those that may be withheld from the public in accordance with the provisions of 5 U.S.C. 552, will be available for inspection and copying at the Commission's Public Reference Room. Copies of such filing will also be available for inspection and copying at the principal office of the Exchange. All submissions should refer to File Nos. SR–Amex–98–15; SR–BSE–98–03; SR–CHX–98–08; SR–NASD–98–27; and SR–Phlx–98–15 and should be submitted by May 6, 1998.

VII. Conclusion

It is therefore ordered, pursuant to Section 19(b)(2) of the Act,[41] that the proposed rule changes (SR–NYSE–98–06; SR–Amex–98–09; SR–BSE–98–03; SR–CHX–98–08; SR–NASD–98–27; and SR–Phlx–98–15) are approved.

For the Commission, by the Division of Market Regulation, pursuant to delegated authority.[42]

Jonathan G. Katz,

Secretary.

[FR Doc. 98–10027 Filed 4–14–98; 8:45 am]

BILLING CODE 8010–01–M

[40] See Exchange Act Release Nos. 39666 (February 13, 1998), 63 FR 9034 (February 23, 1998) (SR–NYSE–98–06); 39689 (February 20, 1998), 63 FR 10054 (February 27, 1998) (SR–Amex–98–09).

[41] 15 U.S.C. 78s(b)(2).

[42] 17 CFR 200.30–3(a)(12).

SECURITIES AND EXCHANGE COMMISSION

[Release No. 34–39839; File No. SR–NYSE–97–37]

Self-Regulatory Organizations; New York Stock Exchange, Inc.: Order Granting Approval to Proposed Rule Change by the New York Stock Exchange, Inc., Relating to Shareholder Approval Policy

April 8, 1998.

I. Introduction

On December 23, 1997, the New York Stock Exchange, Inc. (''NYSE'' or ''Exchange'') submitted to the Securities and Exchange Commission (''Commission''), pursuant to Section 19(b)(1) of the Securities Exchange Act of 1934 (''Act'') [1] and Rule 19b–4 thereunder,[2] a proposed rule change to modify its shareholder approval policy (the ''Policy''), contained in Paragraphs 312.03 and 312.04 of the Exchange's Listed Company Manual (the ''Manual''), to provide greater flexibility for listed companies to adopt stock option and similar plans (''Plans'') without shareholder approval.

Notice of the proposed rule change and Amendment No. 1 to the proposed rule change,[3] together with the substance of the proposal, was published for comment in Securities Exchange Act Release No. 39659 (February 12, 1998), 63 FR 9036 (February 23, 1998). No comments were received on the proposal.

II. Description

In September 1997, the Commission approved amendments to the Policy regarding related-party transactions and private sales.[4] The current proposed rule change relates to that portion of the Policy requiring shareholder approval of certain Plans. Currently, the Policy requires a listed company to seek shareholder approval of all stock option plans that are not ''broadly-based'' with an exception for stock or options issued as an inducement for employment to a person not previously employed by the company.

However, in light of recent changes to the legal requirements governing shareholder approval of Plans,[5] and at the urging of listed companies, the Exchange reviewed the Policy with its various constituents. According to the Exchange, the consensus favored some relaxation in the Policy, but not a total repeal of the shareholder approval requirement for Plans. Specifically, the general view was to require shareholder approval when there is the potential for a material dilution of shareholder's equity, with the threshold based on the cumulative dilution of an issuer's non-broad-based Plans, and not on a single Plan.[6] As a result, the NYSE has proposed to amend Paragraph 312.03(a) of the Policy to exempt from shareholder approval non-broad-based Plans in which: (1) No single officer or director acquires more than one percent of the shares of the issuer's common stock outstanding at the time the Plan is adopted; and (2) the cumulative dilution of all non-broad-based Plans of the issuer does not exceed five percent of the issuer's common stock outstanding at the time the Plan is adopted.

In addition, the Exchange has proposed to define ''broadly-based Plan'' in Paragraph 312.04(g).[7] The proposed definition generally would require a review of a number of factors, including, but not limited to, the number of persons covered by the Plan

[1] 15 U.S.C. 78s(b)(1).

[2] 17 CFR 240.19b–4.

[3] *See* letter from James E. Buck, Senior Vice President, NYSE, to Heather Seidel, Attorney, Market Regulation, Commission, dated January 28, 1998. Amendment No. 1 clarified that there is no relationship between the Exchange's definition of ''broadly-based'' and other definitions of similar terms under federal law. Amendment No. 1 also states why the Exchange is amending Paragraph 312.03(a) of the Manual to substitute the word ''material'' for ''essential.'' Finally, Amendment No. 1 explains why the proposal amends Paragraph 312.04(c) to replace ''affiliate'' with ''subsidiary.''

[4] *See* Securities Exchange Act Release No. 39098 (September 19, 1997) 62 FR 50979 (September 29, 1997). The September 1997 amendments to the Policy and the current proposed amendments resulted from a broad review of the Policy conducted by the Exchange.

[5] The Commission recently amended its rules in this area. *See* Rule 16b–3(d) under the Act, as amended in Securities Exchange Act Release No. 37260 (May 31, 1996) 61 FR 30376 (June 14, 1996).

[6] Constituents also asked for more guidance on the definition of a ''broad-based'' Plan.

[7] *See* note 14 and accompanying text.

and the nature of the company's employees, such as whether there are separate compensation arrangements for salaried and hour employees. In its filing, the NYSE noted that companies will be able to discuss their proposed Plans with the Exchange staff to seek guidance on whether the Exchange considers such Plans to be ''broadly-based.''

Further, in order to provide a level of certainty for companies, the definition of a ''broadly-based'' plan states that the Exchange will consider any Plan in which at least 20 percent of an issuer's employees are eligible to receive stock or options, and the majority of those eligible are neither officers nor directors (the ''20% test''), to be broadly-based. However, the Exchange will not automatically consider a Plan that does not meet this 20% test to be narrowly-based. Rather, the proposed rule change encourages a listed company adopting a Plan that it believes to be broadly-based but that fails the 20% test to discuss the Plan with Exchange staff.[8]

The proposed rule change also amends Paragraph 312.04(c) to clarify that, in calculating a company's outstanding shares for the purpose of Paragraph 3112.03, the company must exclude shares held by ''subsidiaries,'' instead of ''affiliates.'' The Exchange will interpret the term ''subsidiary'' to include any majority-owned subsidiary of a listed company.[9] Finally, the proposed rule change also amends the exception in Paragraph 312.03(a)(3) for stock or options issued as an inducement for employment to a person not previously employed by the company, to state that it must be a material inducement (as opposed to an inducement essential) to such person's entering into a employment contract with the company.

III. Discussion

The Commission finds that the proposed rule change is consistent with the requirements of the Act and the rules and regulations thereunder applicable to a national securities exchange, and, in particular, with the requirements of Section 6(b).[10] Specifically, the Commission believes the proposal is consistent with the Section 6(b)(5)[11] requirements that the rules of an exchange be designed to promote just and equitable principles of trade, to prevent fraudulent and manipulative acts, and, in general, to protect investors and the public,[12] in that it provides greater flexibility for issuers to adopt certain non-broad-based Plans while preserving the significant shareholder approval rights afforded under the Policy.

The Commission believes it is consistent with the Act to allow the Exchange to exempt from shareholder approval certain non-broad-based Plans that should not materially dilute shareholders equity, while still requiring shareholder approval for Plans that would have a material effect on a shareholder's equity in the company. The proposed rule change should protect shareholder rights by exempting from shareholder approval only those Plans in which a single officer or director does not acquire more than one percent of the shares of common stock outstanding at the time the Plan is adopted, and where the cumulative dilution of all non-broad-based Plans does not exceed five percent of the common stock outstanding at the time the Plan is adopted. The Commission believes the one percent and five percent thresholds appear to adequately safeguard shareholders rights by still requiring approval of those plans that will have a material effect on shareholder equity while allowing a listed company appropriate flexibility in establishing compensation policies.[13]

The Commission also believes that the Exchange's definition of ''broadly-based'' Plan is reasonable. The Commission notes that it is based on current interpretations used by the Exchange to determine whether a Plan is broadly-based, and should provide guidance to listed companies and shareholders while still allowing the Exchange to review plans on a case-by-case basis. The Commission also notes that the NYSE's definition does not generally correspond to definitions regarding the scope of stock options plans used in other contexts.[14] The Commission also notes that the Exchange will not automatically consider a Plan that does not meet the 20% test to be narrowly-based, but rather encourages a listed company adopting a Plan that it believes to be broadly-based but that fails the 20% test to discuss the Plan with Exchange staff.[15]

The Commission believes that the proposed role change substituting ''subsidiary'' for ''affiliate'' in Paragraph 312.04(c) is reasonable because it eliminates any ambiguity pertaining to whether shares held by a natural person who controls a company are excluded from the calculation of when shareholder approval is required in Paragraph 312.03. The NYSE states it never intended to exclude the shares of such persons in calculating shares actually issued and outstanding for purposes of determining whether shareholder approval is required under Paragraph 312.03. The Commission agrees with the NYSE that using ''subsidiary'' clarifies this issue because a subsidiary is generally defined to include only companies, not natural persons. The Commission notes that the NYSE will interpret the term to include any majority-owned subsidiary of the listed company. Also, the Commission notes that other self-regulatory organizations use the term ''subsidiary'' in similar rules regarding shareholder approval.[16]

Finally, the Commission believes it is reasonable for the Exchange to amend Paragraph 312.03(a)(3) to require that a stock option grant be a ''material'' inducement, rather than an ''essential'' one, to a person's entering into an employment contract, based on the Exchange's belief that a ''materiality'' standard will be more workable, yet still will achieve the NYSE's goal of ensuring that the stock option grant be an important aspect of an employment decision in order for it to qualify as an exemption to the requirement of shareholder approval.

In summary, the Commission believes that the changes proposed by the NYSE will provide listed companies with more flexibility in issuing stock option or purchase plans while still adequately protecting shareholder rights to approve those plans that will have a material effect on their equity. In addition, the other changes should provide some guidance to listed companies and shareholders concerning the type of

[8] The Commission notes that the language in proposed Paragraph 312.04(g) states that the 20% test is a non-exclusive safe harbor. The Commission notes that all plans that meet the 20% test will be considered broadly-based by the NYSE. The safe harbor is non-exclusive in that plans that do not meet the 20% test may still be deemed broadly-based after discussion with Exchange staff. Phone conversation between Mike Simon, NYSE, and Heather Seidel, Attorney, Market Regulation, Commission, on February 11, 1998.

[9] *See* Amendment No. 1, *supra* note 3.

[10] 15 U.S.C. 78f(b).

[11] 15 U.S.C. 78(b)(5).

[12] In approving this rule, the Commission notes that it has considered the proposed rule's impact on efficiency, competition, and capital formation. 15 U.S.C. 78c(f).

[13] The Commission notes that the five percent threshold is based on the Exchange's review of the Plans of 29 NYSE listed companies. *See* Notice Release.

[14] Amendment No. 1, *supra* note 3. *See e.g.*, Sections 401(a)(26), 410 and 423 of the Internal Revenue Code (26 U.S.C. 401(a)(26), 410 and 423) and Section 201(2) of the Employee Retirement Income Security Act (29 U.S.C. 1051(2)).

[15] *See* note 8, *supra*.

[16] *See* Chicago Stock Exchange Article XXVII, Rule 1900I(j)(vi); Pacific Exchange Rule 3.3(d), Commentary .01; and National Association of Securities Dealers Rule 4460(i)(3).

Plans that need to receive shareholder approval while still providing the NYSE with a certain amount of flexibility to review such Plans under the shareholder approval requirements on a case-by-case basis.

IV. Conclusion

It is therefore ordered, pursuant to Section 19(b)(2) of the Act,[17] that the proposed rule change (SR–NYSE–97–37), as amended, is approved.

For the Commission, by the Division of Market Regulation, pursuant to delegated authority.[18]

Margaret H. McFarland,

Deputy Secretary.

[FR Doc. 98–9885 Filed 4–14–98; 8:45 am]

BILLING CODE 8010–01–M

[17] 15 U.S.C. 78s(b)(2).

[18] 17 CFR 200.30–3(a)(12).

SMALL BUSINESS ADMINISTRATION

[Declaration of Disaster #3045; Amendment #7]

State of Florida

In accordance with information received from the Federal Emergency Management Agency dated April 1, 1998, the above-numbered declaration is hereby amended to extend the deadline for filing applications for physical damage as a direct result of this disaster to May 6, 1998. The deadline for filing applications for economic injury remains October 6, 1998.

(Catalog of Federal Domestic Assistance Program Nos. 59002 and 59008.)

Dated: April 7, 1998.

Bernard Kulik,

Associate Administrator for Disaster Assistance.

[FR Doc. 98–9959 Filed 4–14–98; 8:45 am]

BILLING CODE 8025–01–P

SMALL BUSINESS ADMINISTRATION

[Declaration of Disaster #3069 Amendment #3]

State of Georgia

In accordance with a notice from the Federal Emergency Management Agency dated April 2, 1998, the above-numbered Declaration is hereby amended to include Butts, Chatham, Muscogee, and Richmond Counties in the State of Georgia as a disaster area due to damages caused by severe storms and flooding beginning on March 7, 1998 and continuing.

In addition, applications for economic injury loans from small businesses located in the following contiguous counties may be filed until the specified date at the previously designated location: Columbia, Henry, and Newton Counties in Georgia; Beauford, Edgefield, and Jasper Counties in South Carolina; and Lee County, Alabama. Any counties contiguous to the above-named primary counties and not listed herein have been previously declared.

All other information remains the same, i.e., the deadline for filing applications for physical damage is May 10, 1998 and for economic injury the termination date is December 11, 1998.

(Catalog of Federal Domestic Assistance Program Nos. 59002 and 59008.)

Dated: April 7, 1998.

Bernard Kulik,

Associate Administrator for Disaster Assistance.

[FR Doc. 98–9958 Filed 4–14–98; 8:45 am]

BILLING CODE 8025–01–M

SMALL BUSINESS ADMINISTRATION

[Declaration of Economic Injury Disaster #9827]

Commonwealth of Massachusetts (And Contiguous Counties in Connecticut, New York, and Vermont)

Berkshire County and the contiguous Counties of Franklin, Hampden, and Hampshire in Massachusetts; Litchfield County, Connecticut; Columbia, Dutchess, and Rensselear Counties in New York; and Bennington County, Vermont constitute an economic injury disaster loan area as a result of a fire that occurred on March 29, 1998 in the City of Williamstown. Eligible small businesses and small agricultural cooperatives without credit available elsewhere may file applications for economic injury assistance as a result of this disaster until the close of business on January 7, 1999 at the address listed below or other locally announced locations: U.S. Small Business Administration, Disaster Area 1 Office, 360 Rainbow Blvd. South, 3rd Fl., Niagara Falls, NY 14303.

The interest rate for eligible small businesses and small agricultural cooperatives is 4 percent.

The economic injury numbers are 982800 for Connecticut, 982900 for New York, and 983000 for Vermont.

(Catalog of Federal Domestic Assistance Program No. 59002.)

Date: April 7, 1998.

Aida Alvarez,

Administrator.

[FR Doc. 98–9962 Filed 4–14–98; 8:45 am]

BILLING CODE 8025–01–P

SMALL BUSINESS ADMINISTRATION

[Declaration of Disaster #3075]

State of Michigan

Alpena County and the contiguous Counties of Alcona, Montmorency, Oscoda, and Presque Isle in the State of Michigan constitute a disaster area as a result of damages caused by severe storms and flooding that occurred March 31 through April 1, 1998. Applications for loans for physical damage from this disaster may be filed until the close of business on June 8, 1998 and for economic injury until the close of business on January 8, 1999 at the address listed below or other locally announced locations: U.S. Small Business Administration, Disaster Area 2 Office, One Baltimore Place, Suite 300, Atlanta, GA 30308.

The interest rates are:

	Percent
For Physical Damage:	
Homeowners With Credit Available Elsewhere	7.250
Homeowners Without Credit Available Elsewhere	3.625
Businesses With Credit Available Elsewhere	8.000
Businesses And Non-profit Organizations Without Credit Available Elsewhere	4.000
Others (Including Non-profit Organizations) With Credit Available Elsewhere	7.125
For Economic Injury:	
Businesses And Small Agricultural Cooperatives Without Credit Available Elsewhere	4.000

The number assigned to this disaster for physical damage is 307506 and for economic injury the number is 983200.

(Catalog of Federal Domestic Assistance Program Nos. 59002 and 59008.)

Dated: April 8, 1998.

Aida Alvarez,

Administrator.

[FR Doc. 98–9961 Filed 4–14–98; 8:45 am]

BILLING CODE 8025–01–P

SMALL BUSINESS ADMINISTRATION

[Declaration of Disaster #3074]

State of Minnesota

As a result of the President's major disaster declaration on April 1, 1998, and amendments thereto on April 1 and 3, I find that Brown, Cottonwood, LeSueur, Nicollet, and Rice Counties in the State of Minnesota constitute a disaster area due to damages caused by severe storms and tornadoes that occurred on March 29, 1998.

Applications for loans for physical damages as a result of this disaster may be filed until the close of business on May 31, 1998, and for loans for economic injury until the close of business on January 4, 1999 at the address listed below or other locally announced locations: U.S. Small Business Administration, Disaster Area 2 Office, One Baltimore Place, Suite 300, Atlanta, GA 30308.

In addition, applications for economic injury loans from small businesses located in the following contiguous counties in Minnesota may be filed until the specified date at the above location: Blue Earth, Dakota, Dodge, Goodhue, Jackson, Martin, Murray, Nobles, Redwood, Renville, Scott, Sibley, Steele, Waseca, and Watonwan.

The interest rates are:

	Percent
Physical Damage:	
HOMEOWNERS WITH CREDIT AVAILABLE ELSEWHERE	7.250
HOMEOWNERS WITHOUT CREDIT AVAILABLE ELSEWHERE	3.625
BUSINESSES WITH CREDIT AVAILABLE ELSEWHERE	8.000
BUSINESSES AND NON-PROFIT ORGANIZATIONS WITHOUT CREDIT AVAILABLE ELSEWHERE	4.000
OTHERS (INCLUDING NON-PROFIT ORGANIZATIONS) WITH CREDIT AVAILABLE ELSEWHERE	7.125
For Economic Injury:	
BUSINESSES AND SMALL AGRICULTURAL COOPERATIVES WITHOUT CREDIT AVAILABLE ELSEWHERE	4.000

The numbers assigned to this disaster are 307412 for physical damage and 980700 for economic injury.

(Catalog of Federal Domestic Assistance Program Nos. 59002 and 59008.)

Dated: April 7, 1998.

Bernard Kulik,

Associate Administrator for Disaster Assistance.

[FR Doc. 98–9960 Filed 4–14–98; 8:45 am]

BILLING CODE 8025–01–P

SMALL BUSINESS ADMINISTRATION

[Declaration of Disaster #3073 Amendment #1]

State of North Carolina

In accordance with notices from the Federal Emergency Management Agency dated March 31, April 1, and April 6, 1998, the above-numbered Declaration is hereby amended to include Durham, Edgecombe, Lenoir, Nash, Wake, and Wayne Counties in the State of North Carolina as a disaster area due to damages caused by severe storms, tornadoes, and flooding. This declaration is further amended to establish the incident period for this disaster as beginning on March 20, 1998 and continuing through April 1, 1998.

In addition, applications for economic injury loans from small businesses located in the following contiguous counties in North Carolina may be filed until the specified date at the previously designated location: Chatham, Craven, Duplin, Franklin, Granville, Greene, Halifax, Harnett, Johnston, Jones, Martin, Orange, Person, Pitt, Sampson, Warren, and Wilson. Any counties contiguous to the above-named primary counties and not listed herein have been previously declared.

All other information remains the same, i.e., the deadline for filing applications for physical damage is May 21, 1998 and for economic injury the termination date is December 22, 1998.

(Catalog of Federal Domestic Assistance Program Nos. 59002 and 59008.)

Dated: April 7, 1998.

Bernard Kulik,

Associate Administrator for Disaster Assistance.

[FR Doc. 98–9957 Filed 4–14–98; 8:45 am]

BILLING CODE 8025–01–P

SOCIAL SECURITY ADMINISTRATION

Privacy Act of 1974, As Amended; Computer Matching Program (SSA/Department of Labor (DOL)—Match Number 1003)

AGENCY: Social Security Administration.

ACTION: Notice of Computer Matching Program.

SUMMARY: In accordance with the provisions of the Privacy Act, as amended, this notice announces a computer matching program that SSA plans to conduct with DOL.

DATES: SSA will file a report of the subject matching program with the Committee on Governmental Affairs of the Senate, the Committee on Government Reform and Oversight of the House of Representatives and the Office of Information and Regulatory Affairs, Office of Management and Budget (OMB). The matching program will be effective as indicated below.

ADDRESSES: Interested parties may comment on this notice by either telefax to (410) 966–1722 or writing to the Associate Commissioner for Program Support, 4400 West High Rise Building, 6401 Security Boulevard, Baltimore, MD 21235. All comments received will be available for public inspection at this address.

FOR FURTHER INFORMATION CONTACT: The Associate Commissioner for Program Support at the address shown above.

SUPPLEMENTARY INFORMATION:

A. General

The Computer Matching and Privacy Protection Act of 1988 (Public Law (Pub. L.) 100–503), amended the Privacy Act (5 U.S.C. 552a) by establishing the conditions under which computer matching involving the Federal government could be performed and adding certain protections for individuals applying for and receiving Federal benefits. Section 7201 of the Omnibus Budget Reconciliation Act of 1990 (Pub. L. 101–508) further amended the Privacy Act regarding protections for such individuals.

The Privacy Act, as amended, regulates the use of computer matching by Federal agencies when records in a system of records are matched with other Federal, State or local government records. Among other things, it requires Federal agencies involved in computer matching programs to:

(1) Negotiate written agreements with the other agency or agencies participating in the matching programs;

(2) Obtain the approval of the match agreement by the Data Integrity Boards (DIB) of the participating Federal Agencies;

(3) Furnish detailed reports about matching programs to Congress and OMB;

(4) Notify applicants and beneficiaries that their records are subject to matching; and

(5) Verify match findings before reducing, suspending, terminating or denying an individual's benefits or payments.

B. SSA Computer Matches Subject to the Privacy Act

We have taken action to ensure that all of SSA's computer matching programs comply with the requirements of the Privacy Act, as amended.

Dated: March 31, 1998.

Kenneth S. Apfel,

Commissioner of Social Security.

Notice of Computer Matching Program, Social Security Administration (SSA) with the Department of Labor (DOL)

A. Participating Agencies

SSA and DOL.

B. Purpose of the Matching Program

The purpose of this matching program is to establish the conditions, safeguards

and procedures under which DOL agrees to disclose Part C Black Lung benefit data to SSA. SSA will use the match results to determine the correct amount of Social Security disability benefits for recipients of Part C Black Lung benefits, as required by the Social Security Act (the Act).

C. Authority for Conducting the Matching Program

Section 224(h)(1) of the Act.

D. Categories of Records and Individuals Covered by the Match

DOL will provide SSA with a magnetic tape file extracted from the Office of Workers' Compensation Programs Black Lung Benefits Payments File. The extracted file will contain information about all live miners, under age 65, entitled to Part C Black Lung benefits. Each record on the DOL file will be matched with SSA's Master Beneficiary Record to identify individuals potentially subject to benefit reductions, due to their receipt of Part C Black Lung benefits, under section 224 of the Social Security Act, 42 U.S.C. 424.

E. Inclusive Dates of the Match

The matching program shall become effective upon the signing of the agreement by both parties to the agreement and approval of the agreement by the Data Integrity Boards of the respective agencies, but no sooner than 40 days after notice of the matching program is sent to Congress and the Office of Management and Budget, or 30 days after publication of this notice in the **Federal Register**, whichever is later. The matching program will continue for 18 months from the effective date and may be extended for an additional 12 months thereafter, if certain conditions are met.

[FR Doc. 98–9956 Filed 4–14–98; 8:45 am]
BILLING CODE 4190–29–P

DEPARTMENT OF TRANSPORTATION

Office of the Secretary

Reports, Forms and Recordkeeping Requirements Agency Information Collection Activity Under OMB Review

AGENCY: Office of the Secretary, DOT.

ACTION: Notice and request for comments.

SUMMARY: In compliance with the Paperwork Reduction Act of 1995 (44 U.S.C. 3501 *et seq.*), this notice announces that the Information Collection (ICR) abstracted below has been forwarded to the Office of Management and Budget (OMB) for review and comment. The ICR describes the nature of the information collection and its expected burden. The **Federal Register** Notice with a 60-day comment period soliciting comments on a six-months emergency collection of information request was published on September 30, 1997 [62 FR 51176].

DATES: Comments must be submitted on or before May 15, 1998.

FOR FURTHER INFORMATION CONTACT: Judith Street, ABC–100; Federal Aviation Administration; 800 Independence Avenue, S.W.; Washington, DC 20591; Telephone number (202) 267–9895.

SUPPLEMENTARY INFORMATION:

Federal Aviation Administration (FAA)

Title: Airport Security—part 107 of the Federal Aviation Regulations (14 CFR Ch. I, part 107).

OMB Control Number: 2120–0075.

Type of Request: Extension of currently approved collection.

Affected Public: Business, State, Local and Tribal Government.

Abstract: Airport security programs, training records and screening, bomb threats, and arrest reports are needed to ensure protection of persons and property in air transportation against acts of criminal violence, ensure passenger screening procedures are effective and that information is available to comply with Congressional reporting requirements.

Annual Estimated Burden Hours: 75,414.

ADDRESSES: Send comments to the Office of Information and Regulatory Affairs, Office of Management and Budget, 725–17th Street, NW., Washington, DC 20503, Attention FAA Desk Officer.

Comments are Invited on

Whether the proposed collection of information is necessary for the proper performance of the functions of the Department, including whether the information will have practical utility; the accuracy of the Department's estimate of the burden of the proposed information collection; ways to enhance the quality, utility and clarity of the information to be collected; and ways to minimize the burden of the collection of information on respondents, including the use of automated collection techniques or other forms of information technology.

A comment to OMB is best assured of having its full effect if OMB receives it within 30 days of publication.

Issued in Washington, D.C. on April 6, 1998.

Phillip A. Leach,

Clearance Officer, United States Department of Transportation.

[FR Doc. 98–9935 Filed 4–14–98; 8:45 am]
BILLING CODE 4910–62–M

DEPARTMENT OF TRANSPORTATION

Federal Aviation Administration

RTCA, Inc., Program Management Committee

Pursuant to section 10(a)(2) of the Federal Advisory Committee Act (Pub. L. 92–463, 5 U.S.C., Appendix 2), notice is hereby given for the RTCA Program Management Committee (PMC) meeting to be held April 30, 1998, starting at 9:00 a.m. The meeting will be held at RTCA, Inc., 1140 Connecticut Avenue, NW., Suite 1020, Washington, DC 20036.

The agenda will include: (1) Welcome and Introductions: a. RTCA Remarks; b. Chairman's Remarks; c. Introduction of New PMC Members; (2) Review and Approval of Summary of the Previous Meeting; (3) Presentation: Plan for the Implementation of Digital Data and Associated Voice Communications, Draft 4.0, RTCA Paper No. 056–98/PMC–002 (Presented by Special Committee 169); (4) Consider and Approve Proposed Change 1 to DO–224, Signal-in-Space Minimum Aviation System Performance Standards for Advanced VHF Digital Data Communications Including Compatibility with Digital Voice Techniques, RTCA Paper No. 059–98/SC172–224 (Prepared by Special Committee 172); (5) Discuss/Review/Take Position on: a. Special Committee 190: Proposed Revision to the Terms of Reference for Special Committee 190, RTCA Paper No. 058–98/PMC–004; Discussion on ''Frequently Asked Questions'' Deliverable; b. Proposed Revision to the Terms of Reference for Special Committee 189, RTCA Paper No. 057–98/PMC–003; c. Proposal to Develop Change 1 to DO–215A; d. Review Nominations for Annual RTCA Awards; e. Committee Milestones, RTCA Paper No. 060–98/PMC–005; (6) Other Business; (7) Date and Place of Next Meeting.

Attendance is open to the interested public but limited to space availability. With the approval of the chairman, members of the public may present oral statements at the meeting. Persons wishing to present statements or obtain information should contact the RTCA Secretariat, 1140 Connecticut Avenue,

NW., Suite 1020, Washington, DC 20036; (202) 833–9339 (phone); (202) 833–9434 (fax); or http://www.rtca.org (web site). Members of the public may present a written statement to the committee at any time.

Issued in Washington, DC, on April 9, 1998.

Jane P. Caldwell,

Designated Official.

[FR Doc. 98–9936 Filed 4–14–98; 8:45 am]

BILLING CODE 4910–13–M

DEPARTMENT OF TRANSPORTATION

Federal Aviation Administration

Notice of Intent to Rule on Application to Impose and Use the Revenue From a Passenger Facility Charge (PFC) at Elko Municipal Airport, Elko, NV

AGENCY: Federal Aviation Administration (FAA), DOT.

ACTION: Notice of intent to rule on application.

SUMMARY: The FAA proposes to rule and invites public comment on the application to impose and use the revenue from a PFC at Elko Municipal Airport under the provisions of the Aviation Safety and Capacity Expansion Act of 1990 (Title IX of the Omnibus Budget Reconciliation Act of 1990) (Public Law 101–508) and Part 158 of the Federal Aviation Regulations (14 CFR Part 158).

DATES: Comments must be received on or before May 15, 1998.

ADDRESSES: Comments on this application may be mailed or delivered in triplicate to the FAA at the following address: Federal Aviation Administration, Airports Division, 15000 Aviation Blvd., Lawndale, CA. 90261, or San Francisco Airports District Office, 831 Mitten Road, Room 210, Burlingame, CA. 94010–1303. In addition, one copy of any comments submitted to the FAA must be mailed or delivered to Ms. Linda Ritter, City Manager, City of Elko, at the following address: City Hall, 1751 College Avenue, Elko, Nevada 89801. Air carriers and foreign air carriers may submit copies of written comments previously provided to the City of Elko under section 158.23 of Part 158.

FOR FURTHER INFORMATION CONTACT: Marlys Vandervelde, Airports program Specialist, Airports District Office, 831 Mitten Road, Room 210, Burlingame, CA. 94010–1303, Telephone: (650) 876–2806. The application may be reviewed in person at this same location.

SUPPLEMENTARY INFORMATION: The FAA proposes to rule and invites public comment on the application to impose and use the revenue from a PFC at Elko Municipal Airport under the provisions of the Aviation Safety and Capacity Expansion Act of 1990 (Title IX of the Omnibus Budget Reconciliation Act of 1990) (Public Law 101–508) and Part 158 of the Federal Aviation Regulations (14 CFR Part 158).

On March 30, 1998, the FAA determined that the application to impose and use the revenue from a PFC submitted by the city of Elko was substantially complete within the requirements of section 158.25 of Part 158. The FAA will approve or disapprove the application, in whole or in part, no later than June 30, 1998.

The following is a brief overview of the impose and use application number 98–01–C–00–EKO:

Level of proposed PFC: $3.00.

Proposed Charge effective date: September 1, 1998.

Estimated charge expiration date: October 1, 2000.

Total estimated PFC revenue: $774,635.

Brief description of impose and use projects: Airport Rescue and Firefighting (ARFF) Building and Vehicle, Security/Perimeter Fencing, Master Plan and Terminal Area Study, Airfield Safety Improvements, Terminal Building Expansion Phase I, North General Aviation Apron Improvements and Snow Removal Equipment.

Class or classes of air carriers which the public agency has requested not be required to collect PFCs: None.

Any person may inspect the application in person at the FAA office listed above under **FOR FURTHER INFORMATION CONTACT** and at the FAA Regional Airports Division located at: Federal Aviation Administration, Airports Division, 15000 Aviation Blvd. Lawndale, CA. 90261. In addition, any person may, upon request, inspect the application, notice and other documents germane to the application in person at the city of Elko.

Issued in Hawthorne, California, on March 30, 1998.

Herman C Bliss,

Manager, Airports Division, Western Pacific Region.

[FR Doc. 98–9939 Filed 4–14–98; 8:45 am]

BILLING CODE 4910–13–M

DEPARTMENT OF TRANSPORTATION

Federal Aviation Administration

Intent to Rule on PFC Application 98–02–C–00–EAT to Impose and Use the Revenue From a Passenger Facility Charge (PFC) at Pangborn Memorial Airport, Submitted by the Ports of Chelan and Douglas Counties, Wenatchee, WA

AGENCY: Federal Aviation Administration (FAA), DOT.

ACTION: Notice of intent to rule on application.

SUMMARY: The FAA proposes to rule and invites public comment on the application to impose and use, the revenue from a PFC at Pangborn Memorial Airport under the provisions of 49 U.S.C. 40117 and Part 158 of the Federal Aviation Regulations (14 CFR Part 158).

DATES: Comments must be received on or before May 15, 1998.

ADDRESSES: Comments on this application may be mailed or delivered in triplicate to the FAA at the following address: J. Wade Bryant, Manager; Seattle Airports District Office, SEA–ADO; Federal Aviation Administration; 1601 Lind Avenue SW, Suite 250; Renton, Washington 98055–4056.

In addition, one copy of any comments submitted to the FAA must be mailed or delivered to Mr. Colin A. Clarke, Airport Manager, at the following address: Pangborn Memorial Airport, 1 Pangborn Drive, East Wenatchee, WA 98802–9233.

Air carriers and foreign air carriers may submit copies of written comments previously provided to Pangborn Memorial under section 158.23 of Part 158.

FOR FURTHER INFORMATION CONTACT: Ms. Mary Vargas, (425) 227–2660; Seattle Airports District Office, SEA–ADO; Federal Aviation Administration; 1601 Lind Avenue SW, Suite 250; Renton, WA 98055–4056. The application may be reviewed in person at this same location.

SUPPLEMENTARY INFORMATION: The FAA proposes to rule and invites public comment on the application 98–02–C–00–EAT to impose and use, the revenue from a PFC at Pangborn Memorial Airport, under the provisions of 49 U.S.C. 40117 and Part 158 of the Federal Aviation Regulations (14 CFR Part 158).

On April 8, 1998, the FAA determined that the application to impose and use the revenue from a PFC submitted by the Ports of Chelan and Douglas Counties, Wenatchee, Washington, was substantially complete

within the requirements of section 158.25 of Part 158. The FAA will approve or disapprove the application, in whole or in part, no later than July 8, 1998.

The following is a brief overview of the application.

Level of the proposed PFC: $3.00.

Proposed charge effective date: May 1, 1998.

Proposed charge expiration date: March 31, 2001.

Total estimated net PFC revenue: $307,000.

Brief description of proposed project(s): Impose and Use: Reconstruct runway 12/30; Property acquisition on approach runway 30; Property acquisition on approach runway 12; Taxiway ''G'' lighting and signage; Access road improvements; Equipment purchase for snow removal; Handicap aircraft access ramp; Equipment storage building for snow removal.

Class or classes of air carriers which the public agency has requested not be required to collect PFCs: None.

Any person may inspect the application in person at the FAA office listed above under **FOR FURTHER INFORMATION CONTACT** and at the FAA Regional Airports Office located at: Federal Aviation Administration, Northwest Mountain Regional, Airports Division, ANM–600, 1601 Lind Avenue SW, Suite 540, Renton, WA 98055–4056.

In addition, any person may, upon request, inspect the application, notice and other documents germane to the application in person at Pangborn Memorial Airport.

Issued in Renton, Washington on April 8, 1998.

David A. Field,

Manager, Planning, Programming and Capacity Branch, Northwest Mountain Region.

[FR Doc. 98–9937 Filed 4–14–98; 8:45 am]

BILLING CODE 4910–13–M

DEPARTMENT OF TRANSPORTATION

Federal Aviation Administration

Notice of intent to rule on application to Impose a Passenger Facility Charge (PFC) at San Jose International Airport, San Jose, CA

AGENCY: Federal Aviation Administration (FAA), DOT.

ACTION: Notice of Intent to Rule on Application.

SUMMARY: The FAA proposes to rule and invites public comment on the application to impose a PFC at San Jose International Airport under the provisions of the Aviation Safety and Capacity Expansion Act of 1990 (Title IX of the Omnibus Budget Reconciliation Act of 1990) (Public Law 101–508) and Part 158 of the Federal Aviation Regulations (14 CFR Part 158).

DATES: Comments must be received on or before May 15, 1998.

ADDRESSES: Comments on this application may be mailed or delivered in triplicate to the FAA at the following address: Federal Aviation Administration, Airports Division, 15000 Aviation Blvd., Lawndale, CA 90261, or San Francisco Airports District Office, 831 Mitten Road, Room 210, Burlingame, CA 94010–1303. In addition, one copy of any comments submitted to the FAA must be mailed or delivered to Ms. Regina K. Williams, City Manager, City of San Jose, at the following address: 801 North First Street, San Jose, CA 95110. Air carriers and foreign air carriers may submit copies of written comments previously provided to the city of San Jose under section 158.23 of Part 158.

FOR FURTHER INFORMATION CONTACT: Marlys Vandervelde, Airports Program Specialist, Airports District Office, 831 Mitten Road, Room 210, Burlingame, CA 94010–1303, Telephone: (650) 876–2806. The application may be reviewed in person at this same location.

SUPPLEMENTARY INFORMATION: The FAA proposes to rule and invites public comment on the application to impose a PFC at San Jose International Airport under the provisions of the Aviation Safety and Capacity Expansion Act of 1990 (Title IX of the Omnibus Budget Reconciliation Act of 1990) (Public Law 101–508) and Part 158 of the Federal Aviation Regulations (14 CFR Part 158).

On March 25, 1998, the FAA determined that the application to impose a PFC submitted by the city of San Jose was substantially complete within the requirements of section 158.25 of Part 158. The FAA will approve or disapprove the application, in whole or in part, no later than June 23, 1998.

The following is a brief overview of the impose only application number 98–06–I–00–SJC:

Level of proposed PFC: $3.00.

Proposed charge effective date: September 1, 1998.

Estimated charge expiration date: December 31, 2000.

Total estimated PFC revenue: $35,000,000.

Brief description of the imposed only project: Runway 12R–30L and Taxiway Connections Reconstruction to 8,900 feet.

Class or classes of air carriers which the public agency has requested not be required to collect PFCs: Air Taxi/Commercial Operators (ATCO) filing FAA Form 1800–31.

Any person may inspect the application in person at the FAA office listed above under **FOR FURTHER INFORMATION CONTACT** and at the FAA Regional Airports Division located at: Federal Aviation Administration, Airports Division, 15000 Aviation Blvd., Lawndale, CA 90261. In addition, any person may, upon request, inspect the application, notice and other documents germane to the application in person at the city of San Jose.

Issued in Hawthorne, California, on March 30, 1998.

Herman C. Bliss,

Manager, Airports Division, Western-Pacific Region.

[FR Doc. 98–9938 Filed 4–14–98; 8:45 am]

BILLING CODE 4910–13–M

DEPARTMENT OF TRANSPORTATION

Maritime Administration

[Docket MSP–009]

Lykes Bros. Steamship Company, Inc.; Notice of Application for approvals to proposed transfer of Maritime Security Program Operating Agreements (MA/MSP–21 through MA/MSP–23)

Sea Crews II, Inc. (Sea Crews II), as successor in interest to Lykes Bros. Steamship Co., Inc. (Lykes Bros.), by letter dated April 9, 1998, confirmed notification given to the Maritime Administration (MARAD) on July 14, 1997, that it has transferred Maritime Security Program (MSP) Operating Agreements MA/MSP–21, MA/MSP–22, and MA/MSP–23 (MSP Operating Agreements) to First American Bulk Carrier Corporation (FABC), subject to MARAD approval. By letter dated April 9, 1998, FABC has provided notice to MARAD that, assuming approval by MARAD of the transfer of the MSP Operating Agreements from Lykes Bros. to FABC, it intends to assign those agreements to three wholly owned subsidiaries of FABC: First Ocean Bulk Carrier I LLC, First Ocean Bulk Carrier II LLC, and First Ocean Bulk Carrier III LLC (FABC Subsidiaries). One MSP Operating Agreement is to be assigned to each of the FABC Subsidiaries. The MSP Operating Agreements were awarded to Lykes Bros. On December 20, 1996 with regard to applications filed for the LYKES NAVIGATOR (ex ALMERIA LYKES), LYKES DISCOVERER (ex MARGARET LYKES), and LYKES LIBERATOR (ex STELLA

LYKES) (collectively, the Vessels). The Vessels are currently bareboat chartered from Sea Crews II to Lykes Lines Limited, LLC (Lykes Lines). Sea Crews II intends to form a trust to own the Vessels (Owner Trustee). FABC asserts that it, the FABC Subsidiaries, Sea Crews II, and the Owner Trustee are citizens of the United States under section 2 of the Shipping Act, 1916, as amended. Further, FABC reports that Lykes Lines is a U.S. citizen for purposes of obtaining a registry endorsement.

More particularly, the approvals, findings, and determinations requested include those that may be deemed necessary under statute, regulation, or contract in order:

1. For the FABC Subsidiaries to assume the existing bareboat charters of the Vessels from Sea Crews II to Lykes Lines for the term of the MSP Operating Agreements;

2. For Lykes Bros., acting through Sea Crews II, its successor in interest, to transfer the MSP Operating Agreements to FABC, which in turn would assign them to the FABC Subsidiaries;

3. For the FABC Subsidiaries to time charter the Vessels to Lykes Lines for the term of the MSP Operating Agreements.

FABC, by letter dated April 9, 1998, filed an application with MARAD for participation in the MSP with the MSP Operating Agreements. FABC asserts that its application for participation in the MSP provides MARAD the information regarding FABC, the FABC Subsidiaries, and the Vessels required for MARAD to act on the application to transfer the MSP Operating Agreements to FABC, and in turn, to the FABC Subsidiaries.

FABC requests that MARAD:

1. Allow the requested transfers to become effective in accordance with the applications, and pursuant to law; and

2. Take any and all actions that MARAD may deem necessary or appropriate in order to confirm and effectuate FABC's participation (through the FABC Subsidiaries) in the MSP as transferee of the MSP Operating Agreements.

This notice invites comments on maritime policy issues that may be raised by the Lykes Bros./Sea Crews II/FABC proposal relating to the transfer of the MSP Operating Agreements to FABC, and in turn to the FABC Subsidiaries. This application may be inspected in the Office of the Secretary, Maritime Administration. Any person, firm, or corporation having an interest in this proposal and desiring to submit comments concerning the application must file written comments, in triplicate, with the Secretary, Maritime Administration, Room 7210, Nassif Building, 400 Seventh Street, S.W., Washington, D.C. 20590. Comments must be received no later than the close of business on April 27, 1998. This notice is published as a matter of discretion, and the fact of its publication should in no way be considered a favorable, or unfavorable, decision on the application, as filed, or as may be amended. MARAD will consider any comments timely submitted and take such action with respect thereto as may be deemed appropriate.

Dated: April 10, 1998.

By Order of the Maritime Administration.

Edmund T. Sommer, Jr.,

Acting Secretary, Maritime Administration.

[FR Doc. 98–10024 Filed 4–14–98; 8:45 am]

BILLING CODE 4910–81–P

DEPARTMENT OF TRANSPORTATION

National Highway Traffic Safety Administration

[U.S. DOT Docket Number NHTSA–98–3724]

Reports, Forms, and Record Keeping Requirements

AGENCY: National Highway Traffic Safety Administration (NHTSA), Department of Transportation.

ACTION: Request for public comment on proposed collection of information.

SUMMARY: Before a Federal agency can collect certain information from the public, it must receive approval from the Office of Management and Budget (OMB). Under procedures established by the Paperwork Reduction Act of 1995, before seeking OMB approval, Federal agencies must solicit public comment on proposed collections of information, including extensions and reinstatement of previously approved collections.

This document describes one collection of information for which NHTSA intends to seek OMB approval.

DATES: Comments must be received on or before June 15, 1998.

ADDRESSES: Comments must refer to the docket notice numbers cited at the beginning of this notice and be submitted to Docket Management, Room PL–401, 400 Seventh Street, S.W., Washington, DC 20590. Please identify the proposed collection of information for which a comment is provided, by referencing its OMB clearance Number. It is requested, but not required, that 2 copies of the comment be provided. The Docket Section is open on weekdays from 10 a.m. to 5 p.m.

FOR FURTHER INFORMATION CONTACT: Complete copies of each request for collection of information may be obtained at no charge from Mr. Michael Robinson, NHTSA Information Collection Clearance Officer, 400 Seventh Street, S.W., Room 6123, NAD–40, Washington, D.C. 20590. Mr. Robinson's telephone number is (202) 366–9456. Please identify the relevant collection of information by referring to its OMB Control Number.

SUPPLEMENTARY INFORMATION: Under the Paperwork Reduction Act of 1995, before an agency submits a proposed collection of information to OMB for approval, it must first publish a document in the **Federal Register** providing a 60-day comment period and otherwise consult with members of the public and affected agencies concerning each proposed collection of information. The OMB has promulgated regulations describing what must be included in such a document. Under OMB's regulation (at 5 CFR 1320.8(d), an agency must ask for public comment on the following:

(i) Whether the proposed collection of information is necessary for the proper performance of the functions of the agency, including whether the information will have practical utility;

(ii) The accuracy of the agency's estimate of the burden of the proposed collection of information, including the validity of the methodology and assumptions used;

(iii) How to enhance the quality, utility, and clarity of the information to be collected;

(iv) How to minimize the burden of the collection of information on those who are to respond,

including the use of appropriate automated, electronic, mechanical, or other technological collection techniques or other forms of information technology, e.g. permitting electronic submission of responses.

In compliance with these requirements, NHTSA asks for public comments on the following proposed collections of information:

(1) *Title:* 23 CFR Parts 1200, 1204 and 1205 Uniform Safety Program Cost Summary Form (HS 217) for Highway Safety Plan.

OMB Control Number: 2127–0003.

Affected Public: State, Local or Tribal Government.

Abstract: The Highway Safety Act of 1966 (23 U.S.C. 401 *et seq.*) established a formula grant program to improve highway safety in the States. As a condition of the grant, the Act provides that the States must meet certain requirements contained in 23 U.S.C.

402. Section 402(a) requires each State to have a highway safety program, approved by the Secretary of Transportation, which is designed to reduce traffic crashes and the deaths, injuries, and property damage resulting from those crashes. Section 402(b) sets forth the minimum requirements with which each State's highway safety program must comply. A 1987 amendment to the Highway Safety Act required the Secretary to determine, through a rulemaking process, those programs ''most effective'' in reducing crashes, injuries, and deaths, taking into account ''consideration of the States having a major role in establishing [such] programs.'' The Secretary was authorized to revise the rule from time to time. In accordance with this provision, the agencies have identified, over time, nine such programs, the ''National Priority Program areas: (1) Alcohol and other Drug Countermeasures, (2) Police Traffic Services, (3) Occupant Protection, (4) Traffic Records, (5) Emergency Medical Services, (6) Motor Safety, (7) Pedestrian and Bicycle Safety, and (8) Speed Control & (9) Roadway Safety.

Under this program, States submit the Highway Safety Program and other documentation explaining how they intend to use the grant funds. In order to account for funds expended under these priority areas and other program areas, States are required to submit a Program Cost Summary. The Program Cost Summary is completed to reflect the State's proposed allocations of funds (including carry-forward funds) by program area, based on the projects and activities identified in the Highway Safety Plan. During the past several years, numerous steps have been taken to reduce the burden of paperwork on the States. The annual burden will remain low due to the minimum amount of documentation required to be provided has been substantially reduced. We have simplified this process even more by automating the Program Cost Summary.

Estimated Annual Burden: 570.

Number of Respondents: 57.

Issued on: April 7, 1998.

Adele Derby,

Associate Administrator for State and Community Services.

[FR Doc. 98–9931 Filed 4–14–98; 8:45 am]

BILLING CODE 4910–59–P

DEPARTMENT OF TRANSPORTATION

National Highway Traffic Safety Administration

[Docket No. NHTSA–98–3715]

Receipt of Petition for Decision that Nonconforming 1981–1988 Toyota Landcruiser Multi-Purpose Passenger Vehicles Are Eligible for Importation

AGENCY: National Highway Traffic Safety Administration, DOT.

ACTION: Notice of receipt of petition for decision that nonconforming 1981–1988 Toyota Landcruiser multi-purpose passenger vehicles (MPVs) are eligible for importation.

SUMMARY: This notice announces receipt by the National Highway Traffic Safety Administration (NHTSA) of a petition for a decision that 1981–1988 Toyota Landcruiser MPVs that were not originally manufactured to comply with all applicable Federal motor vehicle safety standards are eligible for importation into the United States because (1) they are substantially similar to vehicles that were originally manufactured for importation into and sale in the United States and that were certified by their manufacturer as complying with the safety standards, and (2) they are capable of being readily altered to conform to the standards.

DATES: The closing date for comments on the petition is May 15, 1998.

ADDRESSES: Comments should refer to the docket number and notice number, and be submitted to: Docket Management, Room PL–401, 400 Seventh St., SW, Washington, DC 20590. (Docket hours are from 10 am to 5 pm.).

FOR FURTHER INFORMATION CONTACT: George Entwistle, Office of Vehicle Safety Compliance, NHTSA (202–366–5306).

SUPPLEMENTARY INFORMATION:

Background

Under 49 U.S.C. 30141(a)(1)(A), a motor vehicle that was not originally manufactured to conform to all applicable Federal motor vehicle safety standards shall be refused admission into the United States unless NHTSA has decided that the motor vehicle is substantially similar to a motor vehicle originally manufactured for importation into and sale in the United States, certified under 49 U.S.C. 30115, and of the same model year as the model of the motor vehicle to be compared, and is capable of being readily altered to conform to all applicable Federal motor vehicle safety standards.

Petitions for eligibility decisions may be submitted by either manufacturers or importers who have registered with NHTSA pursuant to 49 CFR part 592. As specified in 49 CFR 593.7, NHTSA publishes notice in the **Federal Register** of each petition that it receives, and affords interested persons an opportunity to comment on the petition. At the close of the comment period, NHTSA decides, on the basis of the petition and any comments that it has received, whether the vehicle is eligible for importation. The agency then publishes this decision in the **Federal Register**.

Champagne Imports, Inc. of Lansdale, Pennsylvania (''Champagne'') (Registered Importer 90–009) has petitioned NHTSA to decide whether 1981–1988 Toyota Landcruiser MPVs are eligible for importation into the United States. The vehicles which Champagne believes are substantially similar are 1981–1988 Toyota Landcruiser MPVs that were manufactured for importation into, and sale in, the United States and certified by their manufacturer, Toyota Motor Corporation, as conforming to all applicable Federal motor vehicle safety standards.

The petitioner claims that it carefully compared non-U.S. certified 1981–1988 Toyota Landcruisers to their U.S. certified counterparts, and found the vehicles to be substantially similar with respect to compliance with most Federal motor vehicle safety standards.

Champagne submitted information with its petition intended to demonstrate that non-U.S. certified 1981–1988 Toyota Landcruisers, as originally manufactured, conform to many Federal motor vehicle safety standards in the same manner as their U.S. certified counterparts, or are capable of being readily altered to conform to those standards.

Specifically, the petitioner claims that non-U.S. certified 1981–1988 Toyota Landcruisers are identical to their U.S. certified counterparts with respect to compliance with Standard Nos. 102 *Transmission Shift Lever Sequence . . . .*, 103 *Defrosting and Defogging Systems*, 104 *Windshield Wiping and Washing Systems*, 105 *Hydraulic Brake Systems*, 106 *Brake Hoses*, 113 *Hood Latch Systems*, 116 *Brake Fluid*, 119 *New Pneumatic Tires for Vehicles other than Passenger Cars*, 124 *Accelerator Control Systems*, 201 *Occupant Protection in Interior Impact*, 203 *Impact Protection for the Driver From the Steering Control System*, 204 *Steering Control Rearward Displacement*, 205 *Glazing Materials*, 206 *Door Locks and Door Retention*

Components, 207 *Seating Systems,* 209 *Seat Belt Assemblies,* 210 *Seat Belt Assembly Anchorages,* 212 *Windshield Retention,* 219 *Windshield Zone Intrusion,* and 302 *Flammability of Interior Materials.*

Petitioner also contends that the vehicles are capable of being readily altered to meet the following standards, in the manner indicated:

Standard No. 101 *Controls and Displays:* (a) substitution of a lens marked ''Brake'' for a lens with a noncomplying symbol on the brake failure indicator lamp; (b) installation of a seat belt warning lamp that displays the appropriate symbol; (c) recalibration of the speedometer/odometer from kilometers to miles per hour.

Standard No. 108 *Lamps, Reflective Devices and Associated Equipment:* (a) installation of U.S.-model sealed beam headlamp assemblies; (b) installation of U.S.-model front and rear sidemarker/reflector assemblies; (c) installation of U.S.-model tail lamp assemblies.

Standard No. 111 *Rearview Mirror:* replacement of the passenger side rearview mirror with a U.S.-model component.

Standard No. 114 *Theft Protection:* installation of a warning buzzer microswitch in the steering lock assembly and a warning buzzer.

Standard No. 118 *Power Window Systems:* rewiring of the power window system so that the window transport is inoperative when the ignition is switched off.

Standard No. 120 *Tire Selection and Rims for Motor Vehicles other than Passenger Cars:* installation of a tire information placard.

Standard No. 208 *Occupant Crash Protection:* (a) installation of a U.S.-model seat belt in the driver's position, or a belt webbing actuated microswitch inside the driver's seat belt retractor; (b) installation of an ignition switch actuated seat belt warning lamp and buzzer. The petitioner states that the vehicle is equipped with combination lap and shoulder restraints that adjust by means of an automatic retractor and release by means of a single push button at both front designated seating positions, with combination lap and shoulder restraints that release by means of a single push button at both rear outboard designated seating positions, and with a lap belt in the rear center designated seating position.

Standard No. 301 *Fuel System Integrity:* installation of a rollover valve in the fuel tank vent line between the fuel tank and the evaporative emissions collection canister.

The petitioner also states that a vehicle identification number plate must be affixed to the vehicles to meet the requirements of 49 CFR Part 565.

Interested persons are invited to submit comments on the petition described above. Comments should refer to the docket number and be submitted to: Docket Management, Room PL–401, 400 Seventh St., SW, Washington, DC 20590. It is requested but not required that 10 copies be submitted.

All comments received before the close of business on the closing date indicated above will be considered, and will be available for examination in the docket at the above address both before and after that date. To the extent possible, comments filed after the closing date will also be considered. Notice of final action on the petition will be published in the **Federal Register** pursuant to the authority indicated below.

Authority: 49 U.S.C. 30141(a)(1)(A) and (b)(1); 49 CFR 593.8; delegations of authority at 49 CFR 1.50 and 501.8.

Issued on: April 9, 1998.

Marilynne Jacobs,

Director, Office of Vehicle Safety Compliance.

[FR Doc. 98–9930 Filed 4–14–98; 8:45 am]

BILLING CODE 4910–59–P

DEPARTMENT OF TRANSPORTATION

National Highway Traffic Safety Administration

[Docket No. NHTSA–98–3717]

Receipt of Petition for Decision that Nonconforming 1990 Volkswagen Transporter Multi-Purpose Passenger Vehicles are Eligible for Importation

AGENCY: National Highway Traffic Safety Administration, DOT.

ACTION: Notice of receipt of petition for decision that nonconforming 1990 Volkswagen Transporter multi-purpose passenger vehicles (MPVs) are eligible for importation.

SUMMARY: This notice announces receipt by the National Highway Traffic Safety Administration (NHTSA) of a petition for a decision that 1990 Volkswagen Transporter MPVs that were not originally manufactured to comply with all applicable Federal motor vehicle safety standards are eligible for importation into the United States because (1) they are substantially similar to vehicles that were originally manufactured for importation into and sale in the United States and that were certified by their manufacturer as complying with the safety standards, and (2) they are capable of being readily altered to conform to the standards.

DATES: The closing date for comments on the petition is May 15, 1998.

ADDRESSES: Comments should refer to the docket number and notice number, and be submitted to: Docket Management, Room PL–401, 400 Seventh St., SW, Washington, DC 20590. (Docket hours are from 10 am to 5 pm)

FOR FURTHER INFORMATION CONTACT: George Entwistle, Office of Vehicle Safety Compliance, NHTSA (202–366–5306).

SUPPLEMENTARY INFORMATION:

Background

Under 49 U.S.C. 30141(a)(1)(A), a motor vehicle that was not originally manufactured to conform to all applicable Federal motor vehicle safety standards shall be refused admission into the United States unless NHTSA has decided that the motor vehicle is substantially similar to a motor vehicle originally manufactured for importation into and sale in the United States, certified under 49 U.S.C. 30115, and of the same model year as the model of the motor vehicle to be compared, and is capable of being readily altered to conform to all applicable Federal motor vehicle safety standards.

Petitions for eligibility decisions may be submitted by either manufacturers or importers who have registered with NHTSA pursuant to 49 CFR part 592. As specified in 49 CFR 593.7, NHTSA publishes notice in the **Federal Register** of each petition that it receives, and affords interested persons an opportunity to comment on the petition. At the close of the comment period, NHTSA decides, on the basis of the petition and any comments that it has received, whether the vehicle is eligible for importation. The agency then publishes this decision in the **Federal Register**.

Champagne Imports, Inc. of Lansdale, Pennsylvania (''Champagne'') (Registered Importer 90–009) has petitioned NHTSA to decide whether 1990 Volkswagen Transporter MPVs are eligible for importation into the United States. The vehicles which Champagne believes are substantially similar are 1990 Volkswagen Vanagon MPVs that were manufactured for importation into, and sale in, the United States and certified by their manufacturer, Volkswagenwerke, A.G., as conforming to all applicable Federal motor vehicle safety standards.

The petitioner claims that it carefully compared the 1990 Volkswagen Transporter to the 1990 Volkswagen Vanagon, and found the two vehicles to be substantially similar with respect to

compliance with most Federal motor vehicle safety standards.

Champagne submitted information with its petition intended to demonstrate that the 1990 Volkswagen Transporter, as originally manufactured, conforms to many Federal motor vehicle safety standards in the same manner as the 1990 Volkswagen Vanagon, or is capable of being readily altered to conform to those standards.

Specifically, the petitioner claims that the 1990 Volkswagen Transporter is identical to the 1990 Volkswagen Vanagon with respect to compliance with Standard Nos. 102 *Transmission Shift Lever Sequence . . . .,* 103 *Defrosting and Defogging Systems,* 104 *Windshield Wiping and Washing Systems,* 105 *Hydraulic Brake Systems,* 106 *Brake Hoses,* 113 *Hood Latch Systems,* 116 *Brake Fluid,* 119 *New Pneumatic Tires for Vehicles other than Passenger Cars,* 124 *Accelerator Control Systems,* 201 *Occupant Protection in Interior Impact,* 203 *Impact Protection for the Driver From the Steering Control System,* 204 *Steering Control Rearward Displacement,* 205 *Glazing Materials,* 206 *Door Locks and Door Retention Components,* 207 *Seating Systems,* 209 *Seat Belt Assemblies,* 210 *Seat Belt Assembly Anchorages,* 212 *Windshield Retention,* 219 *Windshield Zone Intrusion,* and 302 *Flammability of Interior Materials.*

Petitioner also contends that the vehicle is capable of being readily altered to meet the following standards, in the manner indicated:

Standard No. 101 *Controls and Displays:* (a) substitution of a lens marked ''Brake'' for a lens with a noncomplying symbol on the brake failure indicator lamp; (b) installation of a seat belt warning lamp that displays the appropriate symbol; (c) recalibration of the speedometer/odometer from kilometers to miles per hour.

Standard No. 108 *Lamps, Reflective Devices and Associated Equipment:* (a) installation of U.S.-model sealed beam headlamp assemblies; (b) installation of U.S.-model front and rear sidemarker/reflector assemblies; (c) installation of U.S.-model tail lamp assemblies.

Standard No. 111 *Rearview Mirror:* replacement of the passenger side rearview mirror with a U.S.-model component.

Standard No. 114 *Theft Protection:* installation of a warning buzzer microswitch in the steering lock assembly and a warning buzzer.

Standard No. 118 *Power Window Systems:* rewiring of the power window system so that the window transport is inoperative when the ignition is switched off.

Standard No. 120 *Tire Selection and Rims for Motor Vehicles other than Passenger Cars:* installation of a tire information placard.

Standard No. 208 *Occupant Crash Protection:* (a) installation of a U.S.-model seat belt in the driver's position, or a belt webbing actuated microswitch inside the driver's seat belt retractor; (b) installation of an ignition switch actuated seat belt warning lamp and buzzer. The petitioner states that the vehicle is equipped with combination lap and shoulder restraints that adjust by means of an automatic retractor and release by means of a single push button at both front outboard designated seating positions, and with a lap belt in the front center designated seating position. The petitioner further notes that the vehicle is not equipped with a rear seat.

Standard No. 301 *Fuel System Integrity:* installation of a rollover valve in the fuel tank vent line between the fuel tank and the evaporative emissions collection canister.

The petitioner also states that a vehicle identification number plate must be affixed to the vehicle to meet the requirements of 49 CFR Part 565.

Interested persons are invited to submit comments on the petition described above. Comments should refer to the docket number and be submitted to: Docket Management, Room PL–401, 400 Seventh St., SW, Washington, DC 20590. It is requested but not required that 10 copies be submitted.

All comments received before the close of business on the closing date indicated above will be considered, and will be available for examination in the docket at the above address both before and after that date. To the extent possible, comments filed after the closing date will also be considered. Notice of final action on the petition will be published in the **Federal Register** pursuant to the authority indicated below.

Authority: 49 U.S.C. 30141 (a)(1)(A) and (b)(1); 49 CFR 593.8; delegations of authority at 49 CFR 1.50 and 501.8.

Issued on: April 9, 1998.

Marilynne Jacobs,

Director, Office of Vehicle Safety Compliance.

[FR Doc. 98–9933 Filed 4–14–98; 8:45 am]

BILLING CODE 4910–59–P

DEPARTMENT OF TRANSPORTATION

National Highway Traffic Safety Administration

[Docket No. NHTSA–98–3716]

Receipt of Petition for Decision that Nonconforming 1995–1998 Ford Windstar Multi-Purpose Passenger Vehicles Are Eligible for Importation

AGENCY: National Highway Traffic Safety Administration, DOT.

ACTION: Notice of receipt of petition for decision that nonconforming 1995–1998 Ford Windstar multi-purpose passenger vehicles (MPVs) are eligible for importation.

SUMMARY: This notice announces receipt by the National Highway Traffic Safety Administration (NHTSA) of a petition for a decision that 1995–1998 Ford Windstar MPVs that were not originally manufactured to comply with all applicable Federal motor vehicle safety standards are eligible for importation into the United States because (1) they are substantially similar to vehicles that were originally manufactured for sale in the United States and that were certified by their manufacturer as complying with the safety standards, and (2) they are capable of being readily altered to conform to the standards.

DATES: The closing date for comments on the petition is May 15, 1998.

ADDRESSES: Comments should refer to the docket number and notice number, and be submitted to: Docket Management, Room PL–401, 400 Seventh St., SW, Washington, DC 20590. [Docket hours are from 10 am to 5 pm]

FOR FURTHER INFORMATION CONTACT: George Entwistle, Office of Vehicle Safety Compliance, NHTSA (202–366–5306).

SUPPLEMENTARY INFORMATION:

Background

Under 49 U.S.C. 30141(a)(1)(A), a motor vehicle that was not originally manufactured to conform to all applicable Federal motor vehicle safety standards shall be refused admission into the United States unless NHTSA has decided that the motor vehicle is substantially similar to a motor vehicle originally manufactured for importation into and sale in the United States, certified under 49 U.S.C. 30115, and of the same model year as the model of the motor vehicle to be compared, and is capable of being readily altered to conform to all applicable Federal motor vehicle safety standards.

Petitions for eligibility decisions may be submitted by either manufacturers or

importers who have registered with NHTSA pursuant to 49 CFR part 592. As specified in 49 CFR 593.7, NHTSA publishes notice in the **Federal Register** of each petition that it receives, and affords interested persons an opportunity to comment on the petition. At the close of the comment period, NHTSA decides, on the basis of the petition and any comments that it has received, whether the vehicle is eligible for importation. The agency then publishes this decision in the **Federal Register**.

Champagne Imports, Inc. of Lansdale, Pennsylvania (''Champagne'') (Registered Importer 90–009) has petitioned NHTSA to decide whether 1995–1998 Ford Windstar MPVs are eligible for importation into the United States. The vehicles which Champagne believes are substantially similar are 1995–1998 Ford Windstar MPVs that were manufactured for sale in, the United States and certified by their manufacturer, Ford Motor Company, as conforming to all applicable Federal motor vehicle safety standards.

The petitioner claims that it carefully compared non-U.S. certified 1995–1998 Ford Windstars to their U.S. certified counterparts, and found the vehicles to be substantially similar with respect to compliance with most Federal motor vehicle safety standards.

Champagne submitted information with its petition intended to demonstrate that non-U.S. certified 1995–1998 Ford Windstars, as originally manufactured, conform to many Federal motor vehicle safety standards in the same manner as their U.S. certified counterparts, or are capable of being readily altered to conform to those standards.

Specifically, the petitioner claims that non-U.S. certified 1995–1998 Ford Windstars are identical to their U.S. certified counterparts with respect to compliance with Standard Nos. 102 *Transmission Shift Lever Sequence . . ., 103 Defrosting and Defogging Systems,* 104 *Windshield Wiping and Washing Systems,* 105 *Hydraulic Brake Systems,* 106 *Brake Hoses,* 113 *Hood Latch Systems,* 116 *Brake Fluid,* 119 *New Pneumatic Tires for Vehicles other than Passenger Cars,* 124 *Accelerator Control Systems,* 201 *Occupant Protection in Interior Impact,* 204 *Steering Control Rearward Displacement,* 205 *Glazing Materials,* 206 *Door Locks and Door Retention Components,* 207 *Seating Systems,* 209 *Seat Belt Assemblies,* 210 *Seat Belt Assembly Anchorages,* 212 *Windshield Retention,* 219 *Windshield Zone Intrusion,* and 302 *Flammability of Interior Materials.*

Petitioner also contends that the vehicles are capable of being readily altered to meet the following standards, in the manner indicated:

Standard No. 101 *Controls and Displays:* (a) substitution of a lens marked ''Brake'' for a lens with a noncomplying symbol on the brake failure indicator lamp; (b) installation of a seat belt warning lamp that displays the appropriate symbol; (c) recalibration of the speedometer/odometer from kilometers to miles per hour.

Standard No. 108 *Lamps, Reflective Devices and Associated Equipment:* (a) installation of U.S.-model headlamp assemblies; (b) installation of U.S.-model front and rear sidemarker/reflector assemblies.

Standard No. 111 *Rearview Mirror:* replacement of the passenger side rearview mirror with a U.S.-model component.

Standard No. 114 *Theft Protection:* installation of a warning buzzer microswitch in the steering lock assembly and a warning buzzer.

Standard No. 118 *Power Window Systems:* rewiring of the power window system so that the window transport is inoperative when the ignition is switched off.

Standard No. 120 *Tire Selection and Rims for Motor Vehicles other than Passenger Cars:* installation of a tire information placard.

Standard No. 208 *Occupant Crash Protection:* (a) installation of a U.S.-model seat belt in the driver's position, or a belt webbing actuated microswitch inside the driver's seat belt retractor; (b) installation of an ignition switch actuated seat belt warning lamp and buzzer; (c) replacement of the driver's and passenger's side air bags and knee bolsters with U.S.-model components on vehicles that are not so equipped. The petitioner states that the vehicle is equipped with combination lap and shoulder restraints that adjust by means of an automatic retractor and release by means of a single push button at both front designated seating positions, with combination lap and shoulder restraints that release by means of a single push button at both rear outboard designated seating positions, and with a lap belt in the rear center designated seating position.

Standard No. 301 *Fuel System Integrity:* installation of a rollover valve in the fuel tank vent line between the fuel tank and the evaporative emissions collection canister.

The petitioner also states that a vehicle identification number plate must be affixed to the vehicles to meet the requirements of 49 CFR part 565.

Interested persons are invited to submit comments on the petition described above. Comments should refer to the docket number and be submitted to: Docket Management, Room PL–401, 400 Seventh St., SW, Washington, DC 20590. It is requested but not required that 10 copies be submitted.

All comments received before the close of business on the closing date indicated above will be considered, and will be available for examination in the docket at the above address both before and after that date. To the extent possible, comments filed after the closing date will also be considered. Notice of final action on the petition will be published in the **Federal Register** pursuant to the authority indicated below.

Authority: 49 U.S.C. 30141(a)(1)(A) and (b)(1); 49 CFR 593.8; delegations of authority at 49 CFR 1.50 and 501.8.

Issued on: April 9, 1998.

Marilynne Jacobs,

Director, Office of Vehicle Safety Compliance.

[FR Doc. 98–9934 Filed 4–14–98; 8:45 am]

BILLING CODE 4910–59–P

DEPARTMENT OF THE TREASURY

Internal Revenue Service

Proposed Collection; Comment Request for Form 706–QDT

AGENCY: Internal Revenue Service (IRS), Treasury.

ACTION: Notice and request for comments.

SUMMARY: The Department of the Treasury, as part of its continuing effort to reduce paperwork and respondent burden, invites the general public and other Federal agencies to take this opportunity to comment on proposed and/or continuing information collections, as required by the Paperwork Reduction Act of 1995, Pub. L. 104–13 (44 U.S.C. 3506(c)(2)(A)). Currently, the IRS is soliciting comments concerning Form 706–QDT, U.S. Estate Tax Return for Qualified Domestic Trusts.

DATES: Written comments should be received on or before June 15, 1998 to be assured of consideration.

ADDRESSES: Direct all written comments to Garrick R. Shear, Internal Revenue Service, room 5571, 1111 Constitution Avenue NW., Washington, DC 20224.

FOR FURTHER INFORMATION CONTACT: Requests for additional information or copies of the form and instructions should be directed to Martha R. Brinson, (202) 622–3869, Internal Revenue

Service, room 5571, 1111 Constitution Avenue NW., Washington, DC 20224.

SUPPLEMENTARY INFORMATION:

Title: U.S. Estate Tax Return for Qualified Domestic Trusts.

OMB Number: 1545–1212.

Form Number: 706–QDT.

Abstract: Form 706–QDT is used by the trustee or the designated filer to compute and report the Federal estate tax imposed on qualified domestic trusts by Internal Revenue Code section 2056A. The IRS uses the information to enforce this tax and to verify that the tax has been properly computed.

Current Actions: There are no changes being made to the form at this time.

Type of Review: Extension of a currently approved collection.

Affected Public: Individuals or households and business or other for-profit organizations.

Estimated Number of Respondents: 80.

Estimated Time Per Respondent: 4 hr., 26 min.

Estimated Total Annual Burden Hours: 354.

The following paragraph applies to all of the collections of information covered by this notice:

An agency may not conduct or sponsor, and a person is not required to respond to, a collection of information unless the collection of information displays a valid OMB control number. Books or records relating to a collection of information must be retained as long as their contents may become material in the administration of any internal revenue law. Generally, tax returns and tax return information are confidential, as required by 26 U.S.C. 6103.

Request For Comments

Comments submitted in response to this notice will be summarized and/or included in the request for OMB approval. All comments will become a matter of public record.

Comments are invited on: (a) Whether the collection of information is necessary for the proper performance of the functions of the agency, including whether the information shall have practical utility; (b) the accuracy of the agency's estimate of the burden of the collection of information; (c) ways to enhance the quality, utility, and clarity of the information to be collected; (d) ways to minimize the burden of the collection of information on respondents, including through the use of automated collection techniques or other forms of information technology; and (e) estimates of capital or start-up costs and costs of operation, maintenance, and purchase of services to provide information.

Approved: April 7, 1998.

Garrick R. Shear,

IRS Reports Clearance Officer.

[FR Doc. 98–9850 Filed 4–14–98; 8:45 am]

BILLING CODE 4830–01–U

DEPARTMENT OF THE TREASURY

Internal Revenue Service

Proposed Collection; Comment Request for Form 8821

AGENCY: Internal Revenue Service (IRS), Treasury.

ACTION: Notice and request for comments.

SUMMARY: The Department of the Treasury, as part of its continuing effort to reduce paperwork and respondent burden, invites the general public and other Federal agencies to take this opportunity to comment on proposed and/or continuing information collections, as required by the Paperwork Reduction Act of 1995, Pub. L. 104–13 (44 U.S.C. 3506(c)(2)(A)). Currently, the IRS is soliciting comments concerning Form 8821, tax Information Authorization.

DATES: Written comments should be received on or before June 15, 1998 to be assured of consideration.

ADDRESSES: Direct all written comments to Garrick R. Shear, Internal Revenue Service, room 5571, 1111 Constitution Avenue NW., Washington, DC 20224.

FOR FURTHER INFORMATION CONTACT: Requests for additional information or copies of the form and instructions should be directed to Martha R. Brinson, (202) 622–3869, Internal Revenue Service, room 5571, 1111 Constitution Avenue NW., Washington, DC 20224.

SUPPLEMENTARY INFORMATION:

Title: Tax Information Authorization.

OMB Number: 1545–1165

Form Number: 8821

Abstract: Form 8821 is used to appoint someone to receive or inspect certain tax information. The information on the form is used to identify appointees and to ensure that confidential tax information is not divulged to unauthorized persons.

Current Actions:

A fourth column is being added to line 3 for Specific Tax Matters. Regulation § 301.6103(a) allows taxpayers to limit the return information disclosed to specific matters. The new column provides the entry space to do this.

Type of Review: Revision of a currently approved collection.

Affected Public: Individuals or households, business or other for-profit organizations, not-for-profit institutions, and farms.

Estimated Number of Respondents: 200,000.

Estimated Time Per Respondent: 1 hr., 3 min.

Estimated Total Annual Burden Hours: 210,000.

The following paragraph applies to all of the collections of information covered by this notice:

An agency may not conduct or sponsor, and a person is not 3 required to respond to, a collection of information unless the collection of information displays a valid OMB control number. Books or records relating to a collection of information must be retained as long as their contents may become material in the administration of any internal revenue law. Generally, tax returns and tax return information are confidential, as required by 26 U.S.C. 6103.

Request For Comments

Comments submitted in response to this notice will be summarized and/or included in the request for OMB approval. All comments will become a matter of public record. Comments are invited on: (a) Whether the collection of information is necessary for the proper performance of the functions of the agency, including whether the information shall have practical utility; (b) the accuracy of the agency's estimate of the burden of the collection of information; (c) ways to enhance the quality, utility, and clarity of the information to be collected; (d) ways to minimize the burden of the collection of information on respondents, including through the use of automated collection techniques or other forms of information technology; and (e) estimates of capital or start-up costs and costs of operation, maintenance, and purchase of services to provide information.

Approved: April 7, 1998.

Garrick R. Shear,

IRS Reports Clearance Officer.

[FR Doc. 98–9851 Filed 4–14–98; 8:45 am]

BILLING CODE 4830–01–U

DEPARTMENT OF THE TREASURY

Internal Revenue Service

Proposed Collection; Comment Request for Form 5308

AGENCY: Internal Revenue Service (IRS), Treasury.

ACTION: Notice and request for comments.

SUMMARY: The Department of the Treasury, as part of its continuing effort to reduce paperwork and respondent burden, invites the general public and other Federal agencies to take this opportunity to comment on proposed and/or continuing information collections, as required by the Paperwork Reduction Act of 1995, Pub. L. 104–13 (44 U.S.C. 3506(c)(2)(A)). Currently, the IRS is soliciting comments concerning Form 5308, request for Change in Plan/Trust Year.

DATES: Written comments should be received on or before June 15, 1998, to be assured of consideration.

ADDRESSES: Direct all written comments to Garrick R. Shear, Internal Revenue Service, room 5571, 1111 Constitution Avenue NW., Washington, DC 20224.

FOR FURTHER INFORMATION CONTACT: Requests for additional information or copies of the form and instructions should be directed to Martha R. Brinson, (202) 622–3869, Internal Revenue Service, room 5571, 1111 Constitution Avenue NW., Washington, DC 20224.

SUPPLEMENTARY INFORMATION:

Title: Request for Change in Plan/Trust Year.

OMB Number: 1545–0201.

Form Number: 5308.

Abstract: Form 5308 is used to request permission to change the plan or trust year for a pension benefit plan. The information submitted is used in determining whether IRS should grant permission for the change.

Current Actions: There are no changes being made to the form at this time.

Type of Review: Extension of a currently approved collection.

Affected Public: Business or other for-profit organizations.

Estimated Number of Respondents: 480.

Estimated Time Per Respondent: 43 min.

Estimated Total Annual Burden Hours: 339.

The following paragraph applies to all of the collections of information covered by this notice:

An agency may not conduct or sponsor, and a person is not required to respond to, a collection of information unless the collection of information displays a valid OMB control number. Books or records relating to a collection of information must be retained as long as their contents may become material in the administration of any internal revenue law. Generally, tax returns and tax return information are confidential, as required by 26 U.S.C. 6103.

Request For Comments

Comments submitted in response to this notice will be summarized and/or included in the request for OMB approval. All comments will become a matter of public record. Comments are invited on: (a) Whether the collection of information is necessary for the proper performance of the functions of the agency, including whether the information shall have practical utility; (b) the accuracy of the agency's estimate of the burden of the collection of information; (c) ways to enhance the quality, utility, and clarity of the information to be collected; (d) ways to minimize the burden of the collection of information on respondents, including through the use of automated collection techniques or other forms of information technology; and (e) estimates of capital or start-up costs and costs of operation, maintenance, and purchase of services to provide information.

Approved: April 8, 1998.

Garrick R. Shear,

IRS Reports Clearance Officer.

[FR Doc. 98–9852 Filed 4–14–98; 8:45 am]

BILLING CODE 4830–01–U

DEPARTMENT OF THE TREASURY

Internal Revenue Service

Proposed Collection; Comment Request for Form 8332

AGENCY: Internal Revenue Service (IRS), Treasury.

ACTION: Notice and request for comments.

SUMMARY: The Department of the Treasury, as part of its continuing effort to reduce paperwork and respondent burden, invites the general public and other Federal agencies to take this opportunity to comment on proposed and/or continuing information collections, as required by the Paperwork Reduction Act of 1995, Pub. L. 104–13 (44 U.S.C. 3506(c)(2)(A)). Currently, the IRS is soliciting comments concerning Form 8332, Release of Claim to Exemption for Child of Divorced or Separated Parents.

DATES: Written comments should be received on or before June 15, 1998 to be assured of consideration.

ADDRESSES: Direct all written comments to Garrick R. Shear, Internal Revenue Service, room 5571, 1111 Constitution Avenue NW., Washington, DC 20224.

FOR FURTHER INFORMATION CONTACT: Requests for additional information or copies of the form and instructions should be directed to Martha R. Brinson, (202) 622–3869, Internal Revenue Service, room 5571, 1111 Constitution Avenue NW., Washington, DC 20224.

SUPPLEMENTARY INFORMATION:

Title: Release of Claim to Exemption for Child of Divorced or Separated Parents.

OMB Number: 1545–0915.

Form Number: 8332.

Abstract: This form is used by a custodial parent to release claim to the dependency exemption for a child of divorced or separated parents. The data is used to verify that the noncustodial parent is entitled to claim the exemption.

Current Actions: There are no changes being made to the form at this time.

Type of Review: Extension of a currently approved collection.

Affected Public: Individuals or households.

Estimated Number of Respondents: 150,000.

Estimated Time Per Respondent: 32 min.

Estimated Total Annual Burden Hours: 81,000.

The following paragraph applies to all of the collections of information covered by this notice:

An agency may not conduct or sponsor, and a person is not required to respond to, a collection of information unless the collection of information displays a valid OMB control number. Books or records relating to a collection of information must be retained as long as their contents may become material in the administration of any internal revenue law. Generally, tax returns and tax return information are confidential, as required by 26 U.S.C. 6103.

Request For Comments

Comments submitted in response to this notice will be summarized and/or included in the request for OMB approval. All comments will become a matter of public record. Comments are invited on: (a) Whether the collection of information is necessary for the proper performance of the functions of the agency, including whether the information shall have practical utility; (b) the accuracy of the agency's estimate of the burden of the collection of information; (c) ways to enhance the quality, utility, and clarity of the information to be collected; (d) ways to minimize the burden of the collection of information on respondents, including through the use of automated collection techniques or other forms of information technology; and (e) estimates of capital or start-up costs and costs of operation, maintenance, and purchase of services to provide information.

Approved: April 7, 1998.

Garrick R. Shear,

IRS Reports Clearance Officer.

[FR Doc. 98–9853 Filed 4–14–98; 8:45 am]

BILLING CODE 4830–01–U

DEPARTMENT OF THE TREASURY

Internal Revenue Service

Proposed Collection; Comment Request for Form 8833

AGENCY: Internal Revenue Service (IRS), Treasury.

ACTION: Notice and request for comments.

SUMMARY: The Department of the Treasury, as part of its continuing effort to reduce paperwork and respondent burden, invites the general public and other Federal agencies to take this opportunity to comment on proposed and/or continuing information collections, as required by the Paperwork Reduction Act of 1995, Pub. L. 104–13 (44 U.S.C. 3506(c)(2)(A)). Currently, the IRS is soliciting comments concerning Form 8833, Treaty-Based Return Position Disclosure Under Section 6114 or 7701(b).

DATES: Written comments should be received on or before June 15, 1998 to be assured of consideration.

ADDRESSES: Direct all written comments to Garrick R. Shear, Internal Revenue Service, room 5571, 1111 Constitution Avenue NW., Washington, DC 20224.

FOR FURTHER INFORMATION CONTACT: Requests for additional information or copies of the form and instructions should be directed to Martha R. Brinson, (202) 622–3869, Internal Revenue Service, room 5571, 1111 Constitution Avenue NW., Washington, DC 20224.

SUPPLEMENTARY INFORMATION:

Title: Treaty-Based Return Position Disclosure Under Section 6114 or 7701(b).

OMB Number: 1545–1354.

Form Number: 8833.

Abstract: Taxpayers who are required by Internal Revenue Code section 6114 to disclose a treaty-based return position use Form 8833 to disclose that position. The form may also be used to make the treaty-based return position disclosure required by regulation § 301.7701(b)–7(b) for ''dual resident'' taxpayers.

Current Actions: There are no changes being made to the form at this time.

Type of Review: Extension of a currently approved collection.

Affected Public: Business or other for-profit organizations and individuals or households.

Estimated Number of Respondents: 6,000.

Estimated Time Per Respondent: 6 hr., 13 min.

Estimated Total Annual Burden Hours: 37,260.

The following paragraph applies to all of the collections of information covered by this notice:

An agency may not conduct or sponsor, and a person is not required to respond to, a collection of information unless the collection of information displays a valid OMB control number. Books or records relating to a collection of information must be retained as long as their contents may become material in the administration of any internal revenue law. Generally, tax returns and tax return information are confidential, as required by 26 U.S.C. 6103.

Request For Comments

Comments submitted in response to this notice will be summarized and/or included in the request for OMB approval. All comments will become a matter of public record. Comments are invited on: (a) Whether the collection of information is necessary for the proper performance of the functions of the agency, including whether the information shall have practical utility; (b) the accuracy of the agency's estimate of the burden of the collection of information; (c) ways to enhance the quality, utility, and clarity of the information to be collected; (d) ways to minimize the burden of the collection of information on respondents, including through the use of automated collection techniques or other forms of information technology; and (e) estimates of capital or start-up costs and costs of operation, maintenance, and purchase of services to provide information.

Approved: April 7, 1998.

Garrick R. Shear,

IRS Reports Clearance Officer.

[FR Doc. 98–9854 Filed 4–14–98; 8:45 am]

BILLING CODE 4830–01–U

DEPARTMENT OF THE TREASURY

Internal Revenue Service

Proposed Collection; Comment Request for Form 8328

AGENCY: Internal Revenue Service (IRS), Treasury.

ACTION: Notice and request for comments.

SUMMARY: The Department of the Treasury, as part of its continuing effort to reduce paperwork and respondent burden, invites the general public and other Federal agencies to take this opportunity to comment on proposed and/or continuing information collections, as required by the Paperwork Reduction Act of 1995, Pub. L. 104–13 (44 U.S.C. 3506(c)(2)(A)). Currently, the IRS is soliciting comments concerning Form 8328, Carryforward Election of Unused Private Activity Bond Volume Cap.

DATES: Written comments should be received on or before June 15, 1998, to be assured of consideration.

ADDRESSES: Direct all written comments to Garrick R. Shear, Internal Revenue Service, room 5571, 1111 Constitution Avenue NW., Washington, DC 20224.

FOR FURTHER INFORMATION CONTACT: Requests for additional information or copies of the form and instructions should be directed to Martha R. Brinson, (202) 622–3869, Internal Revenue Service, room 5571, 1111 Constitution Avenue NW., Washington, DC 20224.

SUPPLEMENTARY INFORMATION:

Title: Carryforward Election of Unused Private Activity Bond Volume Cap.

OMB Number: 1545–0874.

Form Number: 8328.

Abstract: Internal Revenue Code section 146(f) requires that an annual volume limit be placed on the amount of private activity bonds issued by each State. Code section 146(f)(3) provides that the unused amount of the private activity bonds for specific programs can be carried forward for 3 years depending on the type of project. In order to carry forward the unused amount of the private activity bond, an irrevocable election can be made by the issuing authority. Form 8328 allows the issuer to execute the carryforward election.

Current Actions: There are no changes being made to the form at this time.

Type of Review: Extension of a currently approved collection.

Affected Public: Business or other for-profit organizations and state, local or tribal governments.

Estimated Number of Respondents: 10,000.

Estimated Time Per Respondent: 10 hr., 47 min.

Estimated Total Annual Burden Hours: 107,800.

The following paragraph applies to all of the collections of information covered by this notice:

An agency may not conduct or sponsor, and a person is not required to respond to, a collection of information unless the collection of information displays a valid OMB control number. Books or records relating to a collection of information must be retained as long as their contents may become material

in the administration of any internal revenue law. Generally, tax returns and tax return information are confidential, as required by 26 U.S.C. 6103.

Request for Comments

Comments submitted in response to this notice will be summarized and/or included in the request for OMB approval. All comments will become a matter of public record. Comments are invited on: (a) Whether the collection of information is necessary for the proper performance of the functions of the agency, including whether the information shall have practical utility; (b) the accuracy of the agency's estimate of the burden of the collection of information; (c) ways to enhance the quality, utility, and clarity of the information to be collected; (d) ways to minimize the burden of the collection of information on respondents, including through the use of automated collection techniques or other forms of information technology; and (e) estimates of capital or start-up costs and costs of operation, maintenance, and purchase of services to provide information.

Approved: April 8, 1998.

Garrick R. Shear,

IRS Reports Clearance Officer.

[FR Doc. 98–9855 Filed 4–14–98; 8:45 am]

BILLING CODE 4830–01–U

DEPARTMENT OF THE TREASURY

Internal Revenue Service

Proposed Collection; Comment Request for Form 5307

AGENCY: Internal Revenue Service (IRS), Treasury.

ACTION: Notice and request for comments.

SUMMARY: The Department of the Treasury, as part of its continuing effort to reduce paperwork and respondent burden, invites the general public and other Federal agencies to take this opportunity to comment on proposed and/or continuing information collections, as required by the Paperwork Reduction Act of 1995, Public Law 104–13 (44 U.S.C. 3506(c)(2)(A)). Currently, the IRS is soliciting comments concerning Form 5307, Application for Determination for Adopters of Master or Prototype, Regional Prototype or Volume Submitter Plans.

DATES: Written comments should be received on or before June 15, 1998, to be assured of consideration.

ADDRESSES: Direct all written comments to Garrick R. Shear, Internal Revenue Service, room 5571, 1111 Constitution Avenue NW., Washington, DC 20224.

FOR FURTHER INFORMATION CONTACT: Requests for additional information or copies of the form and instructions should be directed to Martha R. Brinson, (202) 622–3869, Internal Revenue Service, room 5571, 1111 Constitution Avenue NW., Washington, DC 20224.

SUPPLEMENTARY INFORMATION:

Title: Application for Determination for Adopters of Master or Prototype, Regional Prototype or Volume Submitter Plans.

OMB Number: 1545–0200.

Form Number: 5307.

Abstract: Employers whose pension plans meet the requirements of Internal Revenue Code section 401(a) are permitted a deduction for their contributions to these plans. To have a plan qualified under Code section 401(a), the employer must submit an application to the IRS as required by regulation § 1.401–1(b)(2). Form 5307 is used as an application for this purpose by adopters of master or prototype, regional prototype, or volume submitter plans.

Current Actions: There are no changes being made to the form at this time.

Type of Review: Extension of a currently approved collection.

Affected Public: Business or other for-profit organizations.

Estimated Number of Respondents: 39,000.

Estimated Time Per Respondent: 18 hr., 25 min.

Estimated Total Annual Burden Hours: 718,380.

The following paragraph applies to all of the collections of information covered by this notice:

An agency may not conduct or sponsor, and a person is not 3 required to respond to, a collection of information unless the collection of information displays a valid OMB control number. Books or records relating to a collection of information must be retained as long as their contents may become material in the administration of any internal revenue law. Generally, tax returns and tax return information are confidential, as required by 26 U.S.C. 6103.

Request for Comments

Comments submitted in response to this notice will be summarized and/or included in the request for OMB approval. All comments will become a matter of public record.

Comments are invited on: (a) Whether the collection of information is necessary for the proper performance of the functions of the agency, including whether the information shall have practical utility; (b) the accuracy of the agency's estimate of the burden of the collection of information; (c) ways to enhance the quality, utility, and clarity of the information to be collected; (d) ways to minimize the burden of the collection of information on respondents, including through the use of automated collection techniques or other forms of information technology; and (e) estimates of capital or start-up costs and costs of operation, maintenance, and purchase of services to provide information.

Approved: April 8, 1998.

Garrick R. Shear,

IRS Reports Clearance Officer.

[FR Doc. 98–9856 Filed 4–14–98; 8:45 am]

BILLING CODE 4830–01–U

DEPARTMENT OF THE TREASURY

Internal Revenue Service

Proposed Collection; Comment Request for Form 8612

AGENCY: Internal Revenue Service (IRS), Treasury.

ACTION: Notice and request for comments.

SUMMARY: The Department of the Treasury, as part of its continuing effort to reduce paperwork and respondent burden, invites the general public and other Federal agencies to take this opportunity to comment on proposed and/or continuing information collections, as required by the Paperwork Reduction Act of 1995, Pub. L. 104–13 (44 U.S.C. 3506(c)(2)(A)). Currently, the IRS is soliciting comments concerning Form 8612, Return of Excise Tax on Undistributed Income of Real Estate Investment Trusts.

DATES: Written comments should be received on or before June 15, 1998 to be assured of consideration.

ADDRESSES: Direct all written comments to Garrick R. Shear, Internal Revenue Service, room 5571, 1111 Constitution Avenue NW., Washington, DC 20224.

FOR FURTHER INFORMATION CONTACT: Requests for additional information or copies of the form and instructions should be directed to Martha R. Brinson, (202) 622–3869, Internal Revenue Service, room 5571, 1111 Constitution Avenue NW., Washington, DC 20224.

SUPPLEMENTARY INFORMATION:

Title: Return of Excise Tax on Undistributed Income of Real Estate Investment Trusts.

OMB Number: 1545–1013.

Form Number: 8612.

Abstract: Form 8612 is used by real estate investment trusts to compute and pay the excise tax on undistributed income imposed under section 4981 of the Internal Revenue Code. The IRS uses the information to verify that the correct amount of tax has been reported.

Current Actions: There are no changes being made to the form at this time.

Type of Review: Extension of a currently approved collection.

Affected Public: Business or other for-profit organizations.

Estimated Number of Respondents: 20.

Estimated Time Per Respondent: 9 hr., 33 min.

Estimated Total Annual Burden Hours: 191

The following paragraph applies to all of the collections of information covered by this notice:

An agency may not conduct or sponsor, and a person is not required to respond to, a collection of information unless the collection of information displays a valid OMB control number. Books or records relating to a collection of information must be retained as long as their contents may become material in the administration of any internal revenue law. Generally, tax returns and tax return information are confidential, as required by 26 U.S.C. 6103.

Request for Comments

Comments submitted in response to this notice will be summarized and/or included in the request for OMB approval. All comments will become a matter of public record. Comments are invited on: (a) Whether the collection of information is necessary for the proper performance of the functions of the agency, including whether the information shall have practical utility; (b) the accuracy of the agency's estimate of the burden of the collection of information; (c) ways to enhance the quality, utility, and clarity of the information to be collected; (d) ways to minimize the burden of the collection of information on respondents, including through the use of automated collection techniques or other forms of information technology; and (e) estimates of capital or start-up costs and costs of operation, maintenance, and purchase of services to provide information.

Approved: April 7, 1998.

Garrick R. Shear,

IRS Reports Clearance Officer.

[FR Doc. 98–9857 Filed 4–14–98; 8:45 am]

BILLING CODE 4830–01–U

DEPARTMENT OF THE TREASURY

Internal Revenue Service

Proposed Collection; Comment Request for Form 1120–ND

AGENCY: Internal Revenue Service (IRS), Treasury.

ACTION: Notice and request for comments.

SUMMARY: The Department of the Treasury, as part of its continuing effort to reduce paperwork and respondent burden, invites the general public and other Federal agencies to take this opportunity to comment on proposed and/or continuing information collections, as required by the Paperwork Reduction Act of 1995, Pub. L. 104–13 (44 U.S.C. 3506(c)(2)(A)). Currently, the IRS is soliciting comments concerning Form 1120-ND, Return for Nuclear Decommissioning Funds and Certain Related Persons.

DATES: Written comments should be received on or before June 15, 1998, to be assured of consideration.

ADDRESSES: Direct all written comments to Garrick R. Shear, Internal Revenue Service, room 5571, 1111 Constitution Avenue NW., Washington, DC 20224.

FOR FURTHER INFORMATION CONTACT: Requests for additional information or copies of the form and instructions should be directed to Martha R. Brinson, (202) 622–3869, Internal Revenue Service, room 5571, 1111 Constitution Avenue NW., Washington, DC 20224.

SUPPLEMENTARY INFORMATION:

Title: Return for Nuclear Decommissioning Funds and Certain Related Persons.

OMB Number: 1545–0954.

Form Number: 1120–ND.

Abstract: A nuclear utility files Form 1120-ND to report the income and taxes of a fund set up by the public utility to provide cash to decommission the nuclear power plant. The IRS uses Form 1120-ND to determine if the fund income taxes are correctly computed and if an entity related to the fund or the nuclear utility must pay taxes on self-dealing, as required by Internal Revenue Code section 4951.

Current Actions: There are no changes being made to the form at this time.

Type of Review: Extension of a currently approved collection.

Affected Public: Business or other for-profit organizations.

Estimated Number of Respondents: 100.

Estimated Time Per Respondent: 32 hr., 9 min.

Estimated Total Annual Burden Hours: 3,215.

The following paragraph applies to all of the collections of information covered by this notice:

An agency may not conduct or sponsor, and a person is not required to respond to, a collection of information unless the collection of information displays a valid OMB control number. Books or records relating to a collection of information must be retained as long as their contents may become material in the administration of any internal revenue law. Generally, tax returns and tax return information are confidential, as required by 26 U.S.C. 6103.

Request for Comments

Comments submitted in response to this notice will be summarized and/or included in the request for OMB approval. All comments will become a matter of public record. Comments are invited on: (a) Whether the collection of information is necessary for the proper performance of the functions of the agency, including whether the information shall have practical utility; (b) the accuracy of the agency's estimate of the burden of the collection of information; (c) ways to enhance the quality, utility, and clarity of the information to be collected; (d) ways to minimize the burden of the collection of information on respondents, including through the use of automated collection techniques or other forms of information technology; and (e) estimates of capital or start-up costs and costs of operation, maintenance, and purchase of services to provide information.

Approved: April 7, 1998

Garrick R. Shear,

IRS Reports Clearance Officer.

[FR Doc. 98–9858 Filed 4–14–98; 8:45 am]

BILLING CODE 4830–01–U

DEPARTMENT OF THE TREASURY

Internal Revenue Service

Proposed Collection; Comment Request for Form 5471 (and Related Schedules)

AGENCY: Internal Revenue Service (IRS), Treasury.

ACTION: Notice and request for comments.

SUMMARY: The Department of the Treasury, as part of its continuing effort to reduce paperwork and respondent burden, invites the general public and other Federal agencies to take this opportunity to comment on proposed and/or continuing information collections, as required by the Paperwork Reduction Act of 1995, Pub.

L. 104–13 (44 U.S.C. 3506(c)(2)(A)). Currently, the IRS is soliciting comments concerning Form 5471 (and related schedules), Information Return of U.S. Persons With Respect To Certain Foreign Corporations.

DATES: Written comments should be received on or before June 15, 1998 to be assured of consideration.

ADDRESSES: Direct all written comments to Garrick R. Shear, Internal Revenue Service, room 5571, 1111 Constitution Avenue NW., Washington, DC 20224.

FOR FURTHER INFORMATION CONTACT: Requests for additional information or copies of the form and instructions should be directed to Martha R. Brinson, (202) 622–3869, Internal Revenue Service, room 5571, 1111 Constitution Avenue NW., Washington, DC 20224.

SUPPLEMENTARY INFORMATION:

Title: Information Return of U.S. Persons With Respect To Certain Foreign Corporations.

OMB Number: 1545–0704.

Form Number: 5471 (and related schedules).

Abstract: Form 5471 and related schedules are used by U.S. persons that have an interest in a foreign corporation. The form is used to report income from the foreign corporation. The form and schedules are used to satisfy the reporting requirements of Internal Revenue Code sections 6035, 6038 and 6046 and the regulations thereunder pertaining to the involvement of U.S. persons with certain foreign corporations.

Current Actions: There are no changes being made to the form at this time.

Type of Review: Extension of a currently approved collection.

Affected Public: Business or other for-profit organizations and individuals or households.

Estimated Number of Respondents: 43,000.

Estimated Time Per Respondent: 177 hr., 2 min.

Estimated Total Annual Burden Hours: 7,612,250.

The following paragraph applies to all of the collections of information covered by this notice:

An agency may not conduct or sponsor, and a person is not required to respond to, a collection of information unless the collection of information displays a valid OMB control number. Books or records relating to a collection of information must be retained as long as their contents may become material in the administration of any internal revenue law. Generally, tax returns and tax return information are confidential, as required by 26 U.S.C. 6103.

Request for Comments

Comments submitted in response to this notice will be summarized and/or included in the request for OMB approval. All comments will become a matter of public record. Comments are invited on: (a) Whether the collection of information is necessary for the proper performance of the functions of the agency, including whether the information shall have practical utility; (b) the accuracy of the agency's estimate of the burden of the collection of information; (c) ways to enhance the quality, utility, and clarity of the information to be collected; (d) ways to minimize the burden of the collection of information on respondents, including through the use of automated collection techniques or other forms of information technology; and (e) estimates of capital or start-up costs and costs of operation, maintenance, and purchase of services to provide information.

Approved: April 7, 1998.

Garrick R. Shear,

IRS Reports Clearance Officer.

[FR Doc. 98–9859 Filed 4–14–98; 8:45 am]

BILLING CODE 4830–01–U

DEPARTMENT OF THE TREASURY

Internal Revenue Service

Proposed Collection; Comment Request for Form 1363

AGENCY: Internal Revenue Service (IRS), Treasury.

ACTION: Notice and request for comments.

SUMMARY: The Department of the Treasury, as part of its continuing effort to reduce paperwork and respondent burden, invites the general public and other Federal agencies to take this opportunity to comment on proposed and/or continuing information collections, as required by the Paperwork Reduction Act of 1995, Pub. L. 104–13 (44 U.S.C. 3506(c)(2)(A)). Currently, the IRS is soliciting comments concerning Form 1363, Export Exemption Certificate.

DATES: Written comments should be received on or before June 15, 1998, to be assured of consideration.

ADDRESSES: Direct all written comments to Garrick R. Shear, Internal Revenue Service, room 5571, 1111 Constitution Avenue NW., Washington, DC 20224.

FOR FURTHER INFORMATION CONTACT: Requests for additional information or copies of the form and instructions should be directed to Martha R. Brinson, (202) 622–3869, Internal Revenue Service, room 5571, 1111 Constitution Avenue NW., Washington, DC 20224.

SUPPLEMENTARY INFORMATION:

Title: Export Exemption Certificate.

OMB Number: 1545–0685.

Form Number: 1363.

Abstract: Internal Revenue Code section 4272(b)(2) exempts exported property from the excise tax on transportation of property. Regulation § 49.4271–1(d)(2) authorizes the filing of Form 1363 by the shipper to request tax exemption for a shipment or a series of shipments. The information on the form is used by the IRS to verify shipments of property made tax-free.

Current Actions: There are no changes being made to the form at this time.

Type of Review: Extension of a currently approved collection.

Affected Public: Business or other for-profit organizations and individuals or households.

Estimated Number of Respondents: 100,000.

Estimated Time Per Respondent: 3 hr., 19 min.

Estimated Total Annual Burden Hours: 332,000.

The following paragraph applies to all of the collections of information covered by this notice:

An agency may not conduct or sponsor, and a person is not required to respond to, a collection of information unless the collection of information displays a valid OMB control number. Books or records relating to a collection of information must be retained as long as their contents may become material in the administration of any internal revenue law. Generally, tax returns and tax return information are confidential, as required by 26 U.S.C. 6103.

Request for Comments

Comments submitted in response to this notice will be summarized and/or included in the request for OMB approval. All comments will become a matter of public record. Comments are invited on: (a) Whether the collection of information is necessary for the proper performance of the functions of the agency, including whether the information shall have practical utility; (b) the accuracy of the agency's estimate of the burden of the collection of information; (c) ways to enhance the quality, utility, and clarity of the information to be collected; (d) ways to minimize the burden of the collection of information on respondents, including through the use of automated collection techniques or other forms of information technology; and (e) estimates of capital or start-up costs and costs of operation, maintenance, and purchase of services to provide information.

Approved: April 7, 1988.

Garrick R. Shear,

IRS Reports Clearance Officer.

[FR Doc. 98–9860 Filed 4–14–98; 8:45 am]

BILLING CODE 4830–01–U

DEPARTMENT OF THE TREASURY

Internal Revenue Service

[EE–44–78]

Proposed Collection; Comment Request for Regulation Project

AGENCY: Internal Revenue Service (IRS), Treasury.

ACTION: Notice and request for comments.

SUMMARY: The Department of the Treasury, as part of its continuing effort to reduce paperwork and respondent burden, invites the general public and other Federal agencies to take this opportunity to comment on proposed and/or continuing information collections, as required by the Paperwork Reduction Act of 1995, Pub. L. 104–13 (44 U.S.C. 3506(c)(2)(A)). Currently, the IRS is soliciting comments concerning an existing final regulation, EE–44–78 (TD 8100), Cooperative Hospital Service Organizations (§ 1.501(e)–1).

DATES: Written comments should be received on or before June 15, 1998, to be assured of consideration.

ADDRESSES: Direct all written comments to Garrick R. Shear, Internal Revenue Service, room 5571, 1111 Constitution Avenue NW., Washington, DC 20224.

FOR FURTHER INFORMATION CONTACT: Requests for additional information or copies of the regulation should be directed to Carol Savage, (202) 622–3945, Internal Revenue Service, room 5569, 1111 Constitution Avenue NW., Washington, DC 20224.

SUPPLEMENTARY INFORMATION:

Title: Cooperative Hospital Service Organizations.

OMB Number: 1545–0814.

Regulation Project Numbers: EE–44–78.

Abstract: This regulation establishes the rules for cooperative hospital service organizations which seek tax-exempt status under section 501(e) of the Internal Revenue Code. Such an organization must keep records in order to show its cooperative nature and to establish compliance with other requirements in Code section 501(c).

Current Actions: There is no change to this existing regulation.

Type of Review: Extension of OMB approval.

Affected Public: Not-for-profit institutions.

The recordkeeping requirement does not create any additional burden on taxpayers because the records which the regulations require would ordinarily be kept by a cooperative as a routine part of its day-to-day business operations.

The following paragraph applies to all of the collections of information covered by this notice:

An agency may not conduct or sponsor, and a person is not required to respond to, a collection of information unless the collection of information displays a valid OMB control number. Books or records relating to a collection of information must be retained as long as their contents may become material in the administration of any internal revenue law. Generally, tax returns and tax return information are confidential, as required by 26 U.S.C. 6103.

Request for Comments

Comments submitted in response to this notice will be summarized and/or included in the request for OMB approval. All comments will become a matter of public record. Comments are invited on: (a) Whether the collection of information is necessary for the proper performance of the functions of the agency, including whether the information shall have practical utility; (b) the accuracy of the agency's estimate of the burden of the collection of information; (c) ways to enhance the quality, utility, and clarity of the information to be collected; (d) ways to minimize the burden of the collection of information on respondents, including through the use of automated collection techniques or other forms of information technology; and (e) estimates of capital or start-up costs and costs of operation, maintenance, and purchase of services to provide information.

Approved: April 8, 1998.

Garrick R. Shear,

IRS Reports Clearance Officer.

[FR Doc. 98–9861 Filed 4–14–98; 8:45 am]

BILLING CODE 4830–01–U

DEPARTMENT OF THE TREASURY

Internal Revenue Service

Proposed Collection; Comment Request for Form 6524

AGENCY: Internal Revenue Service (IRS), Treasury.

ACTION: Notice and request for comments.

SUMMARY: The Department of the Treasury, as part of its continuing effort to reduce paperwork and respondent burden, invites the general public and other Federal agencies to take this opportunity to comment on proposed and/or continuing information collections, as required by the Paperwork Reduction Act of 1995, Public Law 104–13 (44 U.S.C. 3506(c)(2)(A)). Currently, the IRS is soliciting comments concerning Form 6524, Office of Chief Counsel—Application.

DATES: Written comments should be received on or before June 15, 1998, to be assured of consideration.

ADDRESSES: Direct all written comments to Garrick R. Shear, Internal Revenue Service, room 5571, 1111 Constitution Avenue NW., Washington, DC 20224.

FOR FURTHER INFORMATION CONTACT: Requests for additional information or copies of the form and instructions should be directed to Carol Savage, (202) 622–3945, Internal Revenue Service, room 5569, 1111 Constitution Avenue NW., Washington, DC 20224.

SUPPLEMENTARY INFORMATION:

Title: Office of Chief Counsel—Application.

OMB Number: 1545–0796.

Form Number: Form 6524.

Abstract: Form 6524 is used as a screening device to evaluate an applicant's qualifications for employment as an attorney with the Office of Chief Counsel. It provides data deemed critical for evaluating an applicant's qualifications such as Law School Admission Test (LSAT) score, bar admission status, type of work preference, law school, and class standing.

Current Actions: The Background Survey Questionnaire on page 3 of Form 6524 is being eliminated. The Office of Chief Counsel no longer desires to capture the voluntary background survey data via this form.

Type of Review: Revision of a currently approved collection.

Affected Public: Individuals.

Estimated Number of Responses: 3,000.

Estimated Time Per Response: 18 minutes.

Estimated Total Annual Burden Hours: 900.

The following paragraph applies to all of the collections of information covered by this notice:

An agency may not conduct or sponsor, and a person is not required to respond to, a collection of information unless the collection of information displays a valid OMB control number.

Books or records relating to a collection of information must be retained as long as their contents may

become material in the administration of any internal revenue law. Generally, tax returns and tax return information are confidential, as required by 26 U.S.C. 6103.

Request for Comments

Comments submitted in response to this notice will be summarized and/or included in the request for OMB approval. All comments will become a matter of public record. Comments are invited on: (a) Whether the collection of information is necessary for the proper performance of the functions of the agency, including whether the information shall have practical utility; (b) the accuracy of the agency's estimate of the burden of the collection of information; (c) ways to enhance the quality, utility, and clarity of the information to be collected; (d) ways to minimize the burden of the collection of information on respondents, including through the use of automated collection techniques or other forms of information technology; and (e) estimates of capital or start-up costs and costs of operation, maintenance, and purchase of services to provide information.

Approved: April 9, 1998.

Garrick R. Shear,

IRS Reports Clearance Officer.

[FR Doc. 98–9862 Filed 4–14–98; 8:45 am]

BILLING CODE 4830–01–U

Corrections

Federal Register

Vol. 63, No. 72

Wednesday, April 15, 1998

This section of the FEDERAL REGISTER contains editorial corrections of previously published Presidential, Rule, Proposed Rule, and Notice documents. These corrections are prepared by the Office of the Federal Register. Agency prepared corrections are issued as signed documents and appear in the appropriate document categories elsewhere in the issue.

ENVIRONMENTAL PROTECTION AGENCY

40 CFR Part 131

[FRL-5989-8]

Water Quality Standards; Establishment of Numeric Criteria for Priority Toxic Pollutants; States' Compliance—Revision of Polychlorinated Biphenyls (PCBs) Criteria

Correction

In proposed rule document 98–8644 beginning on page 16182, in the issue of Thursday, April 2, 1998, make the following corrections:

§ 131.36 [Corrected]

1. On page 16188, in the third column, in § 131.36(b)(1), ''(b)(1) * * '' should read ''(b)(1) * * * ''.

2. On the same page, in the table, in the column titled ''Fresh Water''in the thirteenth line, ''0.014g'' should be removed.

3. On the same page, in the table, in the column titled ''Saltwater'', in the third line, ''d (µzg/L)'' should read '' d (µg/L)''.

4. On the same page, in the table, in the column titled ''Saltwater'', in the thirteenth line ''0.03g'' should be removed.

5. On the same page, in the table, in the fourth column, under''D'', the heading should read:

Human Health
(10^{-6} risk for carcinogens)

for consumption of:

BILLING CODE 1505-01-D

DEPARTMENT OF THE INTERIOR

5 CFR Chapter XXV

RINs 1090-AA38, 3209-AA15

Supplemental Standards of Ethical Conduct for Employees of the Department of the Interior

Correction

In rule document 97–27069 beginning on page 53713, in the issue of Thursday October 16, 1997, make the following correction:

§ 3502.104 [Corrected]

On page 53719, in the second column, in §3502.104(a), in the first line, ''*Cross-referenced*'' should read ''*Cross-reference*''.

BILLING CODE 1505-01-D

DEPARTMENT OF JUSTICE

Drug Enforcement Administration

Cash Drug Store; Revocation of Registration

Correction

In notice document 98–6631 beginning on page 12824 in the issue of Monday, March 16, 1998, make the following corrections:

1. On page 12826, in the first column, in the last paragraph:

a. Eleven lines from the bottom ''824(as)(2)'' should read ''824(a)(2)''.

b. Seven lines from the bottom ''52,830'' should read ''51,830''.

2. On the same page, in the third column, in the last paragraph, in the sixth line ''0.11104'' should read ''0.104''.

BILLING CODE 1505-01-D

federal register

Wednesday
April 15, 1998

Part II

Environmental Protection Agency

40 CFR Parts 63, 261, and 430 National Emissions Standards for Hazardous Air Pollutants for Source Category: Pulp and Paper Production; Effluent Limitations Guidelines, Pretreatment Standards, and New Source Performance Standards: Pulp, Paper, and Paperboard Category; Final Rule

ENVIRONMENTAL PROTECTION AGENCY

40 CFR Parts 63, 261, and 430

[FRL–5924–8]

RIN 2040–AB53

National Emission Standards for Hazardous Air Pollutants for Source Category: Pulp and Paper Production; Effluent Limitations Guidelines, Pretreatment Standards, and New Source Performance Standards: Pulp, Paper, and Paperboard Category

AGENCY: Environmental Protection Agency (EPA).

ACTION: Final rules.

SUMMARY: This action promulgates effluent limitations guidelines and standards under the Clean Water Act (CWA) for a portion of the pulp, paper, and paperboard industry, and national emission standards for hazardous air pollutants (NESHAP) under the Clean Air Act (CAA) as amended in 1990 for the pulp and paper production source category.

EPA is also promulgating best management practices under the CWA for a portion of the pulp, paper, and paperboard industry, and new analytical methods for 12 chlorinated phenolic pollutants and for adsorbable organic halides (AOX). This action consolidates into 12 subcategories what had once been 26 subcategories of effluent limitations guidelines and standards for the pulp, paper, and paperboard industry, and revises the existing effluent limitations guidelines and standards for the Bleached Papergrade Kraft and Soda subcategory and the Papergrade Sulfite subcategory. The revised effluent limitations guidelines and standards require existing and new facilities within these two subcategories to limit the discharge of pollutants into navigable waters of the United States and to limit the introduction of pollutants into publicly owned treatment works. The NESHAP requires existing and new major sources within the pulp and paper production source category to control emissions using the maximum achievable control technology (MACT) to control hazardous air pollutants (HAP).

EPA is revising the effluent limitations guidelines and standards for the Bleached Papergrade Kraft and Soda subcategory and the Papergrade Sulfite subcategory primarily to reduce the discharge of toxic and nonconventional chemical compounds found in the effluents from these mills. Discharge of these pollutants into the freshwater, estuarine, and marine ecosystems may alter aquatic habitats, affect aquatic life, and adversely impact human health. Discharges of chlorinated organic compounds from chlorine bleaching, particularly dioxins and furans, are human carcinogens and human system toxicants and are extremely toxic to aquatic life. The final effluent limitations guidelines and standards for the Bleached Papergrade Kraft and Soda and Papergrade Sulfite subcategory are estimated to reduce the discharge of adsorbable organic halides (AOX) by 28,210 kkg/year; chloroform by 45 kkg/year; chlorinated phenolics by 47 kkg/year; and 2,3,7,8-TCDD (dioxin) and 2,3,7,8-TCDF (furan) by 125 gm/year. These reductions will permit all 19 dioxin/furan-related fish consumption advisories downstream of pulp and paper mills to be lifted.

EPA is revising the subcategorization scheme for the effluent limitations guidelines and standards because the new scheme better defines the processes typically found in U.S. mills and thus results in what ultimately will be a streamlined regulation that can be implemented more easily by the permit writer. With the exception of the new effluent limitations guidelines and standards for the Bleached Papergrade Kraft and Soda and Papergrade Sulfite subcategories, EPA is making no substantive changes to the limitations and standards applicable to the newly reorganized subcategories. Those portions of the existing pulp, paper, and paperboard effluent limitations guidelines and standards that are not substantively amended by this action are not subject to judicial review; nor is their effective date affected by this reorganization.

The HAPs emitted by facilities covered by the NESHAP include such compounds as methanol, chlorinated compounds, formaldehyde, benzene, and xylene. The health effects of exposure to these and other HAPs at pulp and paper mills can include cancer, respiratory irritation, and damage to the nervous system. The final NESHAP is expected to reduce baseline emissions of HAP by 65 percent or 139,000 Mg/yr.

The pollutant reductions resulting from these rules will achieve the primary goals of both the CAA and CWA, which are to ''enhance the quality of the Nation's air resources so as to promote the public health and welfare and productive capacity of its population'' and to ''restore and maintain the chemical, physical, and biological integrity of the Nation's waters,'' respectively. These rules will result in continued environmental improvement at reasonable cost by providing flexibility in when and how results are achieved and, for certain mills, by providing incentives to surpass baseline requirements.

Elsewhere in today's **Federal Register,** EPA is concurrently proposing NESHAP to control hazardous air pollutants from chemical recovery combustion sources at kraft, soda, sulfite, and stand-alone semi-chemical pulp mills.

In another proposed rule published in today's **Federal Register,** EPA is also proposing a regulation that would require mills enrolled in the Voluntary Advanced Technology Incentives Program being promulgated for the Bleached Papergrade Kraft and Soda subcategory to submit a plan specifying research, construction, and other activities leading to achievement of the Voluntary Advanced Technology effluent limitations, with accompanying dates for achieving these milestones. Second, EPA proposes to authorize Bleached Papergrade Kraft and Soda subcategory mills under certain circumstances to submit a certification based on process changes in lieu of monitoring for chloroform. Third, although not proposing totally chlorine-free (TCF) technologies for new source performance standards under the CWA for Bleached Papergrade Kraft and Soda subcategory at this time, EPA is requesting comments and data regarding the feasibility of TCF processes for this subcategory, especially the range of products made and their specifications. In that proposal EPA is also requesting comments and data regarding the effluent reduction performance of TCF processes for this subcategory.

DATES: In accordance with the Small Business Regulatory Enforcement Fairness Act of 1996, the regulations shall become effective June 15, 1998. For compliance dates, see the **SUPPLEMENTARY INFORMATION** section under the heading ''Compliance Dates.''

ADDRESSES: *Air Dockets.* The Air Dockets are available for public inspection between 8 a.m. and 4 p.m., Monday through Friday except for Federal holidays, at the following address: U.S. Environmental Protection Agency, Air and Radiation Docket and Information Center (MC–6102), 401 M Street SW, Washington, DC 20460, Room M–1500, Waterside Mall; telephone: (202) 260–7548.

Water Docket. The complete public record for the effluent limitations guidelines and standards rulemaking is available for review, Monday through Friday except for federal holidays, at EPA's Water Docket, Room M2616, 401

M Street SW, Washington, DC 20460. For access to Docket materials, call (202) 260–3027. The Docket staff requests that interested parties call between 9:00 am and 3:30 pm for an appointment before visiting the docket.

For additional information about the dockets, see section X.A below.

Background and support documents containing technical, cost, economic, and health information, as well as EPA's response to public comments, are available for public use. A listing and how to obtain these background documents is provided in section XI in this notice.

FOR FURTHER INFORMATION CONTACT: For questions regarding air emissions standards for chemical wood pulping mills, contact Ms. Penny Lassiter, Emissions Standards Division (MD–13), U.S. Environmental Protection Agency, Research Triangle Park, NC 27711, telephone number (919) 541–5396; or Mr. Stephen Shedd, at the same address, telephone number (919) 541–5397. For information concerning the final air standards for mechanical pulping processes, secondary fiber pulping processes, and nonwood fiber pulping processes, contact Ms. Elaine Manning, at the same Research Triangle Park address, telephone number (919) 541–5499. For questions on compliance, enforcement and applicability determinations, contact Ms. Maria Eisemann, Office of Enforcement and Compliance Assurance (2223A), U.S. Environmental Protection Agency, 401 M St., S.W., Washington, D.C. 20460, telephone number (202) 564–7106.

For questions regarding wastewater standards, contact Mr. Donald Anderson at the following address: Engineering and Analysis Division (4303), EPA, 401 M Street, S.W., Washington, D.C. 20460, telephone number (202) 260–7189; or Ms. Wendy D. Smith at the same address, telephone number (202) 260–7184.

For additional information on the economic impact analyses, contact Dr. William Wheeler, Office of Water, Engineering and Analysis Division (4303), U.S. Environmental Protection Agency, 401 M Street, SW, Washington, DC, 20460, (202) 260–7905.

SUPPLEMENTARY INFORMATION:

Overview

The preamble summarizes the legal authority for these rules, background information, the technical and economic methodologies used by the Agency to develop these rules, the impacts of the rules, regulatory implementation, and the availability of supporting documents.

Regulated Entities

Entities regulated by today's action are those operations that chemically pulp and nonchemically pulp wood and nonwood fibers for pulp and paper production. EPA projects that approximately 490 mills are subject to the air regulations promulgated today. Of these mills, 155 will be affected by MACT standards for mills that chemically pulp wood. Within that group, 96 are subject to the effluent limitations guidelines and standards promulgated today. Regulated categories and entities include:

Category	Rule	Examples of regulated entities
Industry	NESHAP	Pulp mills and integrated mills (mills that manufacture pulp and paper/paperboard) that: chemically pulp wood fiber (using kraft, sulfite, soda, or semi-chemical methods); pulp secondary fiber; pulp nonwood fiber; and mechanically pulp wood fiber.
	Effluent Guidelines	Subset of mills subject to the NESHAP that chemically pulp wood fiber using kraft, sulfite, or soda methods to produce bleached papergrade pulp and/or bleached paper/paperboard.

The foregoing table is not intended to be exhaustive, but rather provides a guide for readers regarding entities likely to be regulated by the NESHAP and effluent limitations guidelines and standards promulgated today. This table lists the types of entities that EPA is now aware could potentially be regulated by this action. Other types of entities not listed in the table could also be regulated. To determine whether your facility or company is regulated by this NESHAP, you should carefully examine the applicability criteria in § 63.440 of the air rule and the applicability criteria in part 63, Subpart A of Title 40 of the Code of Federal Regulations. To determine whether your facility is regulated by the effluent limitations guidelines and standards, you should carefully examine the applicability criteria in § 430.20 and § 430.50 of Title 40 of the Code of Federal Regulations.

If you have questions regarding the applicability of the NESHAP or the effluent limitations guidelines and standards, see the section entitled **FOR FURTHER INFORMATION CONTACT.**

Judicial Review

In accordance with 40 CFR § 23.2, the water portion of today's rule shall be considered promulgated for the purposes of judicial review at 1 pm Eastern time on April 29, 1998. Under section 509(b)(1) of the Clean Water Act (CWA), judicial review of today's effluent limitations guidelines and standards is available in the United States Court of Appeals by filing a petition for review within 120 days from the date of promulgation of those guidelines and standards. Under section 307(b)(1) of the CAA, judicial review of the NESHAP is available only by petition for review in the U.S. Court of Appeals for the District of Columbia Circuit within 60 days of today's publication of this NESHAP. Under section 509(b)(2) of the CWA and section 307(b)(2) of the CAA, the requirements in this regulation may not be challenged later in civil or criminal proceedings brought by EPA to enforce these requirements.

Compliance Dates

Existing direct dischargers must comply with limitations based on the best available technology economically achievable (BAT) as soon as such requirements are imposed in their National Pollutant Discharge Elimination System (NPDES) permits. The water regulation also establishes specific deadlines for compliance with best management practices (BMPs), which apply to all sources. The new reporting and recordkeeping requirements promulgated today are not effective until the Office of Management and Budget approves Information Collection Requests for those requirements.

Except as provided in today's BMP regulation, existing indirect dischargers subject to today's water regulations must comply with the pretreatment standards for existing sources being promulgated today by April 16, 2001. In addition, these dischargers must continue to comply with the pretreatment standards for existing sources for pentachlorophenol and trichlorophenol.

Except as provided in today's BMP regulation, new direct and indirect discharging sources must comply with applicable treatment standards on the date the new source begins operation. For purposes of new source performance standards (NSPS), a source is a new source if it meets the definition of ''new source'' in 40 CFR 430.01(j) and if it commences construction after June 15, 1998. For purposes of pretreatment standards for new sources (PSNS), a source is a new source if it meets the definition of ''new source'' in 40 CFR 430.01(j) and if it commenced construction after December 17, 1993.

The following compliance dates apply to the Voluntary Advanced Technology Incentives Program being codified today as part of the water regulations for Subpart B. Each existing direct discharging mill that enrolls in the Voluntary Advanced Technology Incentives Program must comply immediately with limitations based on the mill's existing effluent quality or its current technology-based permit limits for the baseline BAT parameters, whichever are more stringent. Participating mills must also comply with mill-specific interim milestones by the dates specified in their NPDES permits. They must also achieve the baseline BAT effluent limitations for dioxin, furan, chloroform, 12 specified chlorinated organic pollutants and, for mills enrolled at the Tier II or Tier III level, AOX no later than April 15, 2004. Finally, participating mills must achieve BAT limitations corresponding to the most stringent phase of the Voluntary Advanced Technology Incentives Program by the dates specified below:

Voluntary BAT limitations for Tier I must be achieved by April 15, 2004.

Voluntary BAT limitations for Tier II must be achieved by April 15, 2009.

Voluntary BAT limitations for Tier III must be achieved by April 15, 2014.

For new direct discharging mills in Subpart B, EPA is promulgating Voluntary NSPS at the Tier II and Tier III levels. Participating new sources must achieve NSPS at the selected level upon commencing operation.

Compliance dates for the NESHAP are as follows: Existing sources must comply with the NESHAP no later than April 16, 2001 except for the following cases. Equipment in the high volume low concentration (HVLC) system at existing sources at kraft mills (e.g., pulp washer systems, oxygen delignification systems) must comply no later than April 17, 2006. Bleach plants at existing source kraft and soda mills participating in the effluent limitations guidelines Voluntary Advanced Technology Incentives Program must comply with the first stage of the NESHAP no later June 15, 1998 and with the second stage no later than April 15, 2004.

Once today's rules take effect on June 15, 1998, new sources must comply with applicable MACT requirements upon start-up. For a discussion of the circumstances under which a source becomes a new source for compliance with new source air emissions standards, see Sections II.B.2.b. and VI.A.1.

Technology Transfer Network

The Technology Transfer Network (TTN) is one of EPA's electronic bulletin boards. The TTN provides information and technology exchange in various areas of air pollution control. New air regulations are now being posted on the TTN through the world wide web at ''http://www.epa.gov/ttn.'' For more information on the TTN, call the HELP line at (919) 591–5384.

Information on the water regulations may be accessed through the world wide web at http://www.epa.gov/OST/Rules/#final.

Organization of This Document

I. Legal Authority
II. Scope of This Rulemaking
A. EPA's Long-Term Environmental Goals
B. National Emission Standards for Hazardous Air Pollutants (NESHAP)
C. Effluent Limitations Guidelines and Standards
III. Background
A. Prior Regulations, Proposal, Notices of Data Availability, and Public Participation
B. Clean Air Act Statutory Authority
C. Clean Water Act Statutory Authority
D. Other EPA Activities Concerning the Pulp and Paper Industry
IV. Changes in the Industry Since Proposal
V. Summary of Data Gathering Activities Since Proposal
A. Data Gathering for the Development of Air Emissions Standards
B. Data Gathering for the Development of Effluent Limitations Guidelines and Standards
VI. Summary of the Major Changes Since Proposal and Rationale for the Selection of the Final Regulations
A. Air Emission Standards
B. Effluent Limitations Guidelines and Standards
VII. Environmental Impacts
A. Summary of Sources and Level of Control
B. Air Emissions and Water Effluent Reductions
C. Non-Water Quality Environmental Impacts of Effluent Limitations Guidelines and Standards (BAT, PSES, and BMPs)
D. Non-Water Quality Environmental Impacts of New Source Performance Standards and Pretreatment Standards for New Source (NSPS and PSNS)
VIII. Analysis of Costs, Economic Impacts, and Benefits
A. Summary of Costs and Economic Impacts
B. Overview of Economic Analysis
C. Costs and Economic Impacts for Air Emissions Standards
D. Costs and Economic Impacts for Effluent Limitations Guidelines and Standards
E. Costs and Impacts for the Integrated Rule
F. Costs and Impacts of Rejected BAT/PSES Options for the Bleached Papergrade Kraft and Soda Subcategory
G. Benefits
H. Comparison of Costs and Benefits
I. Costs and Benefits of Rejected Options for the Bleached Papergrade Kraft and Soda Subcategory—Option B and TCF
J. Benefit-Cost Comparison Using Case Studies
IX. Incentives for Further Environmental Improvements
A. The Voluntary Advances Technology Incentives Program
B. Incentives Available After Achievement of Advanced Technology BAT Limitations and NSPS
X. Administrative Requirements and Related Government Acts or Initiatives
A. Dockets
B. Executive Order 12866 and OMB Review
C. Regulatory Flexibility Act and the Small Business Regulatory Enforcement Fairness Act of 1996 (SBREFA)
D. Paperwork Reduction Act
E. Unfunded Mandates Reform Act
F. Pollution Prevention Act
G. Common Sense Initiative
H. Executive Order 12875
I. Executive Order 12898
J. Submission to Congress and the General Accounting Office
K. National Technology Transfer and Advancement Act
XI. Background Documents

I. Legal Authority

These regulations are being promulgated under the authority of sections 301, 304, 306, 307, 308, 402, and 501 of the Clean Water Act, 33 U.S.C. sections 1311, 1314, 1316, 1317, 1318, 1342, and 1361, and sections 112, 114, and 301 of the Clean Air Act, 42 U.S.C. sections 7412, 7414, and 7601.

II. Scope of This Rulemaking

Today's Cluster Rules consist of effluent limitations guidelines and standards for the control of wastewater pollutants and national emission standards for hazardous air pollutants. The final rules issued today are based on extensive information gathered by the Agency and on comments received from interested parties during the development of these regulations.

Section VI of this notice discusses the major changes since proposal and the rationale for the regulatory decisions

underlying the rules promulgated today. This summary section highlights the technology bases and other key aspects of the final rules. More detailed descriptions are included in the supporting documents listed in section XI.

In addition, the Agency is today codifying the subcategorization scheme that was proposed for 40 CFR parts 430 and 431, see 58 FR 66078, 66098–100 (Dec. 17, 1993) and is redesignating the section and subpart numbers in 40 CFR part 430 accordingly.

A. EPA's Long-Term Environmental Goals

EPA has integrated the development of the regulations discussed today to provide greater protection of human health and the environment, reduce the cost of complying with the wastewater regulations and air emissions controls, promote and facilitate coordinated compliance planning by industry, promote and facilitate pollution prevention, and emphasize the multimedia nature of pollution control.

The Agency envisions a long-term approach to environmental improvement that is consistent with sound capital expenditures. This approach, which is presented in today's notice, stems from extensive discussions with a range of stakeholders. The effluent limitations guidelines and standards and air emissions standards are only one component of the framework to achieve long-term environmental goals. The overall regulatory framework also includes incentives to reward and encourage mills that implement pollution prevention beyond regulatory requirements. The Agency will continue to encourage mill-specific solutions to remaining environmental problems through water quality-based requirements in permits and enforcement of those requirements. In addition, continuing research on minimum impact technologies, such as closed-loop and totally chlorine-free bleaching processes, will help to identify economical ways of furthering environmental improvement in this industry.

EPA's long-term goals include improved air quality, improved water quality, the elimination of fish consumption advisories downstream of mills, and the elimination of ecologically significant bioaccumulation. An integral part of these goals is an industry committed to continuous environmental improvement—an industry that aggressively pursues research and pilot projects to identify technologies that will reduce, and ultimately eliminate, pollutant discharges from existing and new sources. A holistic approach to implementing these pollution prevention technologies would contribute to the long-term goal of minimizing impacts of mills in all environmental media by moving mills toward closed-loop process operations. Effective implementation of these technologies is capable of increasing reuse of recoverable materials and energy while concurrently reducing consumption of raw materials (e.g., process water, unrecoverable chemicals, etc.), and reducing air emissions and generation of hazardous and non-hazardous wastes. EPA expects that this combination of regulation, research, pilot projects, and incentives will foster continuous environmental improvement with each mill investment cycle. For this reason, EPA is including an incentives program as part of the effluent limitations guidelines and standards being promulgated today for bleached papergrade kraft and soda mills that accept enforceable permit limits requiring effluent reductions well beyond the rule's regulatory baseline (see Section IX). To ensure that today's air emission standards do not present barriers or disincentives to mills in choosing technologies beyond baseline BAT, EPA is providing additional time to comply with MACT beyond the three-year compliance time for certain process units. See Sections VI.A.3.b and VI.A.7 for details on MACT compliance times.

B. National Emission Standards for Hazardous Air Pollutants (NESHAP)

1. Purpose of the NESHAP

The main purposes of the Clean Air Act (CAA) are to protect and enhance the quality of our Nation's air resources, and to promote the public health and welfare and the productive capacity of the population. See CAA, section 101(b)(1). To this end, section 112(d) of the CAA directs EPA to set standards for stationary sources emitting greater than ten tons of any one HAP or 25 tons of total HAPs annually (one ton is equal to 0.908 megagrams). EPA is promulgating this NESHAP because pulp and paper mills are major sources of HAP emissions. Individual mills are capable of emitting as much as several hundred tons per year (tpy) of HAPs. The HAPs emitted may adversely affect air quality and public health. The HAPs controlled by this rule are associated with a variety of adverse health effects including cancer; a number of other toxic health effects such as headaches, nausea, and respiratory distress; and possible reproductive effects.

a. Hazardous Air Pollutants. Table II–1 lists the 14 HAPs emitted in the largest quantities from pulp and paper mills. A few HAPs emitted from pulp and paper mills have been classified as possible, probable, or known human carcinogens. These include acetaldehyde, benzene, carbon tetrachloride, chloroform, formaldehyde, and methylene chloride. The total reduction in national HAP emissions by compliance with the NESHAP is estimated to be 139,000 megagrams per year (Mg/yr).

TABLE II–1.—HIGHEST EMITTED HAZARDOUS AIR POLLUTANTS FROM PULP AND PAPER MILLS

Hazardous Air Pollutants	
Acrolein	Methanol.
Acetaldehyde	Methylene chloride.
o-Cresol	Methyl ethyl ketone.
Carbon tetrachloride	Phenol.
Chloroform	Propionaldehyde.
Cumene	1,2,4-Trichlorobenzene.
Formaldehyde	o-Xylene.

b. Volatile Organic Compounds. Emissions of volatile organic compounds (VOC) have been associated with a variety of health and welfare impacts. Volatile organic compound emissions, together with nitrogen oxides (NO_X), are precursors to the formation of tropospheric ozone. Exposure to ozone is responsible for a series of health impacts, such as alterations in lung capacity; eye, nose, and throat irritation; malaise and nausea; and aggravation of existing respiratory disease. Among the welfare impacts from exposure to ozone include damage to selected commercial timber species and economic losses for commercially valuable crops, such as soybeans and cotton. The total reduction in national VOC emissions by compliance with the NESHAP is estimated to be 409,000 Mg/yr.

c. Total Reduced Sulfur Compounds. Total reduced sulfur (TRS) compound emissions are responsible for the malodors often associated with pulp and paper production. The total reduction in TRS compound emissions estimated as a result of compliance with this NESHAP is 79,000 Mg/yr. Surveys of odor pollution caused by pulp mills have supported a link between odor and health symptoms such as headaches, watery eyes, nasal problems, and breathing difficulties.

2. Summary of the NESHAP

The MACT standards apply to pulp and paper mills that have the potential to emit ten tons per year of any one HAP

or 25 tons per year of all HAPs (one ton is equal to 0.908 megagrams). Potential to emit is based on the total of all HAP emissions from all activities at the mill.

The NESHAP specifies emission standards for pulping processes and bleaching processes. The emission standards for pulping and bleaching processes provide several options for compliance, including an alternative pollution prevention option (the ''clean condensate alternative'') for the kraft pulping process. The standards specify compliance dates for new and existing sources, require control devices to be properly operated and maintained at all times, and clarify the applicability of the NESHAP General Provisions (40 CFR part 63, subpart A) to sources subject to this rule.

The rule subcategorizes the industry to specify different emission standards based on the type of pulping process (kraft, sulfite, semi-chemical, soda, mechanical wood pulping, secondary fiber pulping, or non-wood pulping) and bleaching process (papergrade or dissolving grade). Mills that chemically pulp wood using kraft, semi-chemical, sulfite, or soda processes are referred to in later sections as MACT I mills. Mills that mechanically pulp wood, or that pulp secondary fiber or non-wood fibers, or that produce paper or paperboard from purchased pulp are referred to in later sections as MACT III mills.

The emission control requirements for new and existing sources within each subcategory are the same, except that more emission points are covered for sources subject to the new source provisions. Where two or more subcategories are located at the same mill site and share a piece of equipment, that piece of equipment would be considered a part of the subcategory with the more stringent MACT requirements for that piece of equipment. For example, the foul condensates from an evaporation set processing both kraft weak black liquor and spent liquor from a semi-chemical process would have to comply with the kraft subcategory requirements for foul condensate. This more stringent requirement is appropriate because there is no way to isolate the emissions for each pulping source to determine compliance separately.

These standards do not address emissions from recovery area combustion sources (referred to in later sections as MACT II). These sources are being regulated under a separate NESHAP, which is proposed elsewhere in today's **Federal Register**. A summary of the specific provisions that apply to each of the subcategories is given in the later parts of this section.

a. Definition of Affected Source. At chemical wood pulping mills, the affected source is all emission points in the pulping and bleaching systems. At mills that mechanically pulp wood, secondary fibers, or non-wood materials, the affected source is all emission points in the bleaching system. For kraft mills complying with the clean condensate alternative, the affected source is the pulping system, bleaching system, causticizing system, and papermaking system.

b. New Source MACT. New source MACT applies to: (1) An affected source that commenced construction or reconstruction after initial proposal; (2) pulping or bleaching systems that are reconstructed after initial proposal; and (3) new pulping systems, pulping lines, bleaching systems, and bleaching lines that are added to existing sources after initial proposal. The initial proposal date for mills that chemically pulp wood is December 17, 1993. The initial proposal date for mills that mechanically pulp wood, pulp secondary fibers, or pulp non-wood materials is March 8, 1996.

Descriptions of equipment in each subcategory subject to new source MACT requirements are presented in later sections of this preamble.

c. Compliance Times. The rule requires existing sources to comply with the NESHAP no later than April 16, 2001, except for the following cases. Existing kraft sources are required to control all the equipment in the HVLC collection system no later than April 17, 2006. Dissolving-grade mills are required to comply with bleaching system standards no later than three years after publication of the wastewater effluent limitations guidelines and standards under 40 CFR part 430, subparts A and D.

In addition, the NESHAP sets out a two-phased standard for existing source papergrade kraft and soda bleach mills that elect, under the Voluntary Advanced Technology Incentives Program, to control wastewater discharges to levels surpassing today's BAT baseline. The first phase for existing source MACT requires no increase in the existing HAP emission levels from the papergrade bleaching system—i.e., no backsliding—during the initial period when the mill is working toward meeting its Voluntary Advanced Technology BAT requirements. EPA has determined that immediate compliance with this requirement is practicable because the requirement reflects, for each mill, the performance level it is presently achieving. Therefore, the effective date of the first phase requirements is June 15, 1998. The second phase of existing source MACT requires the mill either to comply with BAT for all pollutant parameters at the baseline level for the Bleached Papergrade Kraft and Soda subcategory, or to certify that chlorine and hypochlorite are not used in the bleach plant, in order to achieve the MACT standard for chloroform emission reduction; it also requires the mill to apply controls for other chlorinated HAPs. All such mills that enroll in the Voluntary Advanced Technology Incentives Program must comply with the second phase of existing source MACT no later than April 15, 2004.

Once today's rules take effect on June 15, 1998, new sources must comply with applicable MACT requirements upon start-up.

d. Kraft Pulping Standards. For existing sources, the kraft pulping standards promulgated today apply to the following equipment systems: The low volume high concentration (LVHC) system, the pulp washing system, the oxygen delignification system, decker systems that do not use fresh water or whitewater from papermaking systems or that use process water with HAP concentrations greater than or equal to 400 parts per million by weight (ppmw), and knotter systems and screening systems that have total system emissions greater than or equal to 0.05 and 0.10 kilograms of HAP per megagram of oven-dried pulp (ODP) produced, respectively (or have total [i.e., knotter and screening] system emissions greater than or equal to 0.15 kilograms of HAP per megagram of ODP produced combined). For new sources, the kraft pulping standards apply to the equipment systems listed above for existing sources, plus weak liquor storage tanks, all knotter systems, all screening systems, and all decker systems.

Sources subject to the kraft pulping standards must enclose open process equipment and route all emissions through a closed-vent system to a control device. The closed-vent system must be designed and operated with no detectable leaks. The rule provides three control device options, as follows: (1) Reduce the HAP content by 98 percent by weight (or, for thermal oxidizers, to a level of 20 parts per million volume [ppmv] of total HAP, corrected to 10 percent oxygen on a dry basis); (2) reduce HAPs by using a properly operated design thermal oxidizer (operated at a minimum temperature of 1,600 °F and a minimum residence time of 0.75 seconds); or (3) reduce HAPs by using a boiler, lime kiln, or recovery

furnace that introduces all emission streams to be controlled with the primary fuel or into the flame zone.

The kraft condensate standards apply to condensate streams generated in the following kraft pulping processes: Digester system, evaporator system, turpentine recovery system, LVHC collection system, and the high volume-low concentration (HVLC) collection system. The HAP mass loading in the condensates from these systems must be reduced by 92 percent, based upon performance of steam stripping. The NESHAP also includes the following four alternative ways to meet the kraft condensate standard: (1) Recycle applicable condensate streams to process equipment that is controlled in accordance with the kraft pulping standards; (2) reduce the concentration of HAP (measured as methanol) in the condensate to 330 ppmw for kraft mills with bleaching systems, or 210 ppmw for kraft mills without bleaching systems; (3) remove at least 5.1 kilograms of HAP (measured as methanol) per megagram of ODP produced for kraft mills with bleaching systems, or remove at least 3.3 kilogram of HAP per megagram of ODP produced for kraft mills without bleaching systems; or (4) discharge pulping process condensates to a biological treatment system achieving at least 92 percent destruction of total HAP.

The pulping process condensates must be conveyed to the treatment system in a closed collection system that is designed and operated to meet the individual drain system requirements specified in §§ 63.960, 63.961, 63.962, and 63.964 of subpart RR. These essentially require that the means of conveyance be leak-free. Air emissions of HAP from vents on any condensate treatment systems (except biological treatment systems) that are used to comply with the standards must be routed to a control device meeting the kraft pulping standards.

All the pulping process condensates from the LVHC and HVLC collection systems must be treated. However, the facility has the option of minimizing the condensate volume sent to treatment from the digester system, turpentine recovery system, and weak liquor feed stages in the evaporator system (i.e., condensate segregation). If sufficient segregation is not achieved, then the entire volume of condensate from the digester system, turpentine recovery system, and weak liquor feed stages in the evaporator system and the LVHC and HVLC collection systems must be treated.

Two options are provided in the rule for determining if sufficient segregation has been achieved. The first option is to isolate at least 65 percent of the total HAP mass in the total of all condensates from the digester system, turpentine recovery system, and weak liquor feed stages in the evaporator system.

The second option requires that a minimum total HAP mass from the high HAP-concentrated condensates from the digester system, turpentine recovery system, and weak liquor feed stages in the evaporator system and the LVHC and HVLC collection system condensates be sent to treatment.

e. Clean Condensate Alternative Standards for Kraft Pulping. The final rule provides an alternative compliance option to the kraft pulping standards for subject equipment in the HVLC systems. This alternative compliance option is referred to as the clean condensate alternative (CCA). The CCA focuses on reducing the HAP concentration in process water (such as from the digestion and liquor evaporation areas) that is introduced into process equipment throughout the mill. By reducing the amount of HAP in the process water, reductions in HAP emissions will also be achieved since less HAP will be available to volatilize off the process to the atmosphere. To demonstrate compliance, the mass emission reduction of HAPs achieved by the alternative technology must equal or exceed that which would have been achieved by implementing the kraft pulping vent controls.

Eligibility for this compliance alternative is determined on a case-by-case basis during the permitting process.

For purposes of developing a compliance strategy, sources may use either emission test data or engineering assessment to determine the baseline HAP emission reductions that would be achieved by complying with the kraft pulping vent standard. To demonstrate that the alternative technology complies with the emission reduction requirements of the standards, emission test data must be used. Two conditions must be met for a CCA compliance demonstration: (1) Owners and operators that choose this alternative must first comply with pulping process condensate standards before implementing the alternative technology; and (2) the HAP emission reductions cannot include reductions associated with any control equipment required by local, state, or Federal agencies' regulations or statutes or with emission reductions attributed to equipment installed prior to December 17, 1993 (i.e., the date of publication of the proposed rule).

For purposes of the CCA, the rule provides an alternative definition of the affected source. The alternative definition allows for the CCA to apply to process systems outside of the kraft pulping system. The expanded source includes the causticizing system and the papermaking system. The mill must specify the process equipment within the expanded source with which to generate the required HAP emissions reductions using the CCA. The mass emission reduction of HAPs must equal or exceed the reduction that would have been achieved through application of the kraft pulping vent standards. The final determination of equivalency shall be made by the permitting authority based on an evaluation of the HAP emission reductions.

f. Sulfite Pulping Standards. For existing sources, the sulfite pulping standards apply to the digester system vents, evaporator system vents, and the pulp washing system. The sulfite pulping standards also apply to air emissions from the effluent from any equipment used to reduce HAP emissions to comply with the standards (e.g., acid plant scrubber and nuisance scrubber). For new sources, the sulfite pulping standards apply to the equipment systems listed for existing sources, plus weak liquor tanks, strong liquor storage tanks, and acid condensate storage tanks.

Sources subject to the sulfite pulping standards for equipment systems must enclose open process equipment and route all HAP emissions through a closed-vent system to a control device. The closed-vent system must be designed and operated with no detectable leaks. The total HAP emissions from the equipment systems and from the effluent from any control device used to reduce HAP emissions must meet a mass emission limit or a percent reduction requirement. Calcium- and sodium-based sulfite pulping mills must meet an emission limit of 0.44 kilograms of methanol per megagram of ODP or achieve a 92 percent methanol reduction. Ammonium- and magnesium-based sulfite pulping mills must meet an emission limit of 1.1 kilograms of methanol per megagram of ODP limit or achieve an 87 percent methanol removal.

g. Semi-Chemical Pulping Standards. For existing sources, the semi-chemical pulping standards apply to the LVHC vent system. For new sources, semi-chemical pulping standards apply to the LVHC system and the pulp washing system.

Sources subject to the semi-chemical pulping standards must enclose open process equipment and route all emissions through a closed-vent system

to a control device. Positive-pressure portions of the closed-vent system must be designed and operated with no detectable leaks. The rule provides three control device options, as follows: (1) Reduce the HAP content by 98 percent by weight (or, for thermal oxidizers, to a level of 20 ppmv of total HAP, corrected to 10 percent oxygen on a dry basis); (2) reduce HAPs by using a properly operated thermal oxidizer (operated at a minimum temperature of 1,600 °F and a minimum residence time of 0.75 seconds); or (3) reduce HAPs by using a boiler, lime kiln, or recovery furnace that introduces all emission streams to be controlled with the primary fuel or into the flame zone.

h. Soda Pulping Standards. For existing sources, the soda pulping standards apply to the LVHC vent system. For new sources, the soda pulping standards apply to the LVHC system and the pulp washing system.

Sources subject to the soda pulping standards must enclose open process equipment and route all emissions through a closed-vent system to a control device. Positive pressure portions of the closed-vent system must be designed and operated with no detectable leaks. The rule provides three control device options, as follows: (1) Reduce the HAP content by 98 percent by weight (or, for thermal oxidizers, to a level of 20 ppmv of total HAP, corrected to 10 percent oxygen on a dry basis); (2) reduce HAPs by using a properly operated thermal oxidizer (operated at a minimum temperature of 1,600 °F and a minimum residence time of 0.75 seconds); or (3) reduce HAPs by using a boiler, lime kiln, or recovery furnace that introduces all emission streams to be controlled with the primary fuel or into the flame zone.

i. Bleaching System Standards. The bleaching provisions apply to bleaching systems that use elemental chlorine to bleach pulp. At kraft, sulfite, and soda pulping processes, the bleaching system provisions also apply to bleaching systems that use chlorinated compounds to bleach pulp. At mechanical pulping, non-wood fiber pulping, and secondary fiber pulping mills, only bleaching systems that use elemental chlorine or chlorine dioxide to bleach pulp are subject to the NESHAP. Bleaching systems that do not use chlorine or chlorinated compounds are considered to be in compliance with the bleaching system requirements. For the applicable systems (i.e., bleaching or brightening in the different subcategories), the chlorinated HAP emissions from bleaching systems that use elemental chlorine or chlorinated compounds must be controlled. Existing source and new source requirements are the same.

Sources subject to the bleaching system standards must enclose process equipment in the bleaching stages and route all emissions through a closed-vent system to a control device that achieves either a 99 percent reduction of chlorinated HAP's (other than chloroform), an outlet concentration at or below 10 ppmv total chlorinated HAP (other than chloroform), or a mass emission limit at or below 0.001 kg of total chlorinated HAP (other than chloroform) per Mg ODP produced. Chlorine may be used as a surrogate for measuring total chlorinated HAP. The closed-vent system must be designed and operated with no detectable leaks.

With respect to chloroform emissions from bleaching systems, EPA is closely correlating the air and water standards. This is because EPA is relying on the same process change technology basis to control both chloroform emissions to air and pollutant discharges to water. Thus, MACT to control chloroform for bleaching systems requires a mill either to meet the applicable baseline effluent limitations guidelines and standards for all pollutants being promulgated today under the Clean Water Act or to certify that chlorine and hypochlorite are not used in the bleaching system.

However, EPA at present lacks sufficient information to establish new effluent limitations guidelines and standards for dissolving grade mills, and also lacks information to reliably ascertain what a MACT standard for chloroform air emissions would be for this unit operation. (It is not appropriate to set MACT standards for chloroform based on the control technology in use today to comply with current effluent limitations guidelines and standards for dissolving grade mills because these technologies are at the wastewater treatment system, rather than in the bleaching process where the chloroform-emitting vents are located.) EPA intends to set new effluent limitations guidelines and standards for dissolving grade mills after analyses currently underway by EPA are complete, and is deferring establishing MACT standards for chloroform until these effluent limitations guidelines and standards are established. Therefore, dissolving grade mills will be required to control chloroform air emissions three years after the new effluent limitations guidelines and standards are promulgated.

In a related action, EPA is also deferring establishing MACT for chlorinated HAPs other than chloroform from dissolving grade bleaching operations until three years after promulgation of new effluent limitations guidelines and standards for mills performing those operations. The Agency is doing so in order to avoid imposition of CAA requirements which would be inconsistent with, or superseded by, forthcoming CWA regulations.

EPA is not aware of any control presently in place or any available control technology for reducing chloroform air emissions at mechanical, secondary fiber, and non-wood pulping mills. Therefore, MACT for chloroform at these mills is no control. Today's water rule does not set new effluent limitations guidelines and standards for control of chloroform at mechanical, secondary fiber, and non-wood pulping mills, but EPA will evaluate whether it is appropriate to do so at a later time. At that time, EPA will also determine whether it is appropriate to revise MACT (pursuant to CAA section 112(d)(6)) in order to control chloroform emissions at those mills.

In addition, EPA is establishing MACT in two phases for bleach plant emissions from existing source papergrade kraft and soda bleaching plants which elect, under the Voluntary Advanced Technology Incentives Program, to control wastewater discharges to levels surpassing the baseline BAT limitations being promulgated today under the CWA. Phase one represents the present MACT floor for existing sources, i.e., no backsliding from existing controls during the initial period when a mill is working toward meeting its Voluntary Advanced Technology BAT requirements; phase two requires the mill either to meet baseline BAT requirements for all pollutants for bleached papergrade kraft and soda mills or to certify that chlorine and hypochlorite are not used in the bleaching system. EPA is establishing MACT in two phases in order to avoid discouraging plants from electing environmentally superior levels of wastewater treatment represented by the Voluntary Advanced Technology Incentives Program. These points are discussed in detail in section VI.A.7.

j. Mechanical Pulping Mill, Secondary Fiber Pulping Mill, Non-wood Pulping Mill, and Papermaking System Standards. Mechanical pulping (groundwood, thermomechanical, pressurized) mills, secondary fiber pulping mills, and non-wood pulping mills must comply with the bleaching system standards described in section II.B.2.i. There are no control requirements for pulping systems or process condensates at these mills. For

papermaking systems, there are no control requirements.

k. Test Methods. The standards specify test methods and procedures for demonstrating that process equipment and condensate streams are in compliance with the MACT standards or are exempt from the rule. The rule also includes provisions to test for no detectable leaks from closed-vent systems. Because the majority of all non-chlorinated HAP emissions from process equipment and in pulping process condensates is methanol, in most cases the owner or operator has the option of measuring methanol as a surrogate for total HAP. For demonstrating compliance using biological treatment or the CCA, the owner or operator must measure total HAP. To demonstrate compliance with the concentration limit requirements, mass emission limit requirements, and percent reduction requirements for bleaching systems, chlorine may be measured as a surrogate for total chlorinated HAP emissions (other than chloroform).

l. Monitoring Provisions. Sources subject to the NESHAP are required to continuously monitor specific process or operating parameters for control devices and collection systems. Continuous emissions monitoring is not required, except as an alternative to certain control requirements. Parameter values are to be established during an initial performance test. Alternative monitoring parameters must be demonstrated to the Administrator's satisfaction to comply with the standards. As at proposal, excursions outside the selected parameter values are violations except for biological treatment systems. If a biological treatment system monitoring parameter is outside the established range, a performance test must be performed. The parameters that must be monitored for vent and condensate compliance are explained below.

Mills using a thermal oxidizer must install, calibrate, maintain, and operate a temperature monitoring device and continuous recorder to measure the temperature in the firebox or in the ductwork immediately downstream of the firebox before any substantial heat exchange occurs. Mills using gas scrubbers at bleaching systems or sulfite processes must install, calibrate, maintain, and operate a device to monitor and continuously record (1) pH or the oxidation/reduction potential of scrubber effluent, (2) vent gas inlet flow rate, and (3) scrubber liquid influent flow rate. As an alternative to monitoring these parameters, mills complying with the bleaching system outlet concentration option must install, calibrate, maintain, and operate a device to monitor and continuously record the chlorine outlet concentration. Mills complying with the bleaching system outlet mass emission limit option must install, calibrate, maintain, and operate a device to monitor and continuously record the chlorine outlet concentration and the scrubber outlet vent gas flow. Bleached papergrade kraft and soda mills enrolling in the Voluntary Advanced Technology Incentives Program in the effluent limitations guidelines and standards portion of today's rule must monitor the application rates of chlorine and hypochlorite to demonstrate that no increase in chlorine or hypochlorite use occurs between June 15, 1998 and April 15, 2004.

Mills using steam strippers must install, calibrate, maintain, and operate a device to monitor and continuously record process water feed rate, steam feed rate, and process water feed temperature. As an alternative to monitoring those parameters, mills complying with the steam stripper outlet concentration option may install, calibrate, maintain, and operate a device to monitor the methanol outlet concentration. In addition to monitoring around the stream stripper, mills that choose to treat a smaller, more concentrated volume of condensate rather than the whole volume of subject condensates must also continuously monitor the condensates to demonstrate that the minimum mass or percent of total mass is being treated. This practice is often referred to as condensate segregation. Mills complying with the condensate segregation requirements shall install, calibrate, maintain, and operate monitors for appropriate parameters as determined during the initial performance test.

Mills using a biological treatment system to treat pulping process condensates must monitor on a daily basis samples of outlet soluble BOD_5 concentration (maximum daily and monthly averages), inlet liquid flow, mixed liquor volatile suspended solids (MLVSS), liquid temperature, and the horsepower of aerator units. Additionally, inlet and outlet grab samples from each biological treatment system unit must be collected and stored for 5 days. These samples must be collected and stored since some of the monitoring parameters (e.g., soluble BOD_5) cannot be determined within a short period of time. These samples are to be used in conjunction with the WATER8 emissions model to demonstrate compliance if the soluble BOD_5, MLVSS, or the aerator horsepower monitoring parameters fall outside the range established during the initial performance test.

Monitoring requirements for the pulping process condensate collection systems include initial and monthly visual inspections of individual drain system components and vent control devices (if used), and repair of defects. Additionally, inspection and monitoring requirements from § 63.964 of subpart RR (National Emission Standards for Individual Drain Systems) are incorporated in the final rule. Monitoring requirements for vent collection systems are (1) a visual inspection of the closed-vent system and enclosure opening seals initially and every 30 days, (2) demonstration of no detectable leaks initially and annually for positive pressure systems or portions of systems, and (3) repair of defects and leaks as soon as practical.

For the CCA, EPA is not specifying the parameters to be monitored in the final rule since the types of equipment that would be used in the CCA are not known at this time. Consequently, the final rule specifies that owners or operators choosing to use the CCA must conduct an initial performance test to determine the appropriate parameters and corresponding parameter values to be monitored continuously. Rationale for the parameter selection must also be provided for the Administrator's approval.

m. Reporting and Recordkeeping Provisions. Sources subject to the NESHAP are required to comply with recordkeeping and reporting provisions in the part 63 General Provisions, and other specified requirements in the NESHAP.

Sources subject to the rule are required to keep readily accessible records of monitored parameters. The monitoring records must be maintained for five years (two years on-site, three years off-site). For each enclosure opening, closed-vent system, and pulping process condensate storage tank, the owner or operator must record the equipment type and identification; results of negative pressure tests and leak detection tests; and specific information on the nature of the defect and repairs. The position of bypass line valves, the condition of valve seals, and the duration of the use of bypass valves on computer controlled valves must also be recorded.

Sources subject to the NESHAP are required to submit the following types of reports: (1) Initial Notification, (2) Notification of Performance Tests, (3) Exceedance Reports, and (4) Semi-annual Summary Reports. Exceedance and summary reports are not required

for emission points that are exempt from the rule. Kraft mills must also submit, initially and bi-annually, a non-binding compliance strategy report for pulping sources electing to comply with the eight-year compliance extension (including the CCA) and for bleaching sources at bleached papergrade kraft and soda mills electing to comply with the Voluntary Advanced Technology BAT requirements. The compliance strategy report must contain, among other information, a description of the emission controls or process modifications selected for compliance and a compliance schedule indicating when each step toward compliance will be reached. For mills complying with the CCA, the report must contain a description of alternative control technology used, identify each piece of equipment affected by the alternative technology, and estimate total HAP emissions and emission reductions.

C. Effluent Limitations Guidelines and Standards

1. Subcategorization and Schedule

EPA is replacing the subcategorization scheme under the former effluent limitations guidelines for this industry (in 40 CFR parts 430 and 431) with a revised subcategorization scheme. EPA is redesignating the Builders' Paper and Roofing Felt category, formerly regulated in 40 CFR part 431, to a subcategory in part 430. This eliminates CFR part 431. The Agency is also redesignating the previous subpart numbers and section numbers, which are shown in Table II–2.

EPA is making no substantive changes to the limitations and standards for any newly redesignated subcategory except for the Bleached Papergrade Kraft and Soda subcategory (new subpart B) and the Papergrade Sulfite subcategory (new subpart E). The rationale for changing the existing subcategorization scheme is discussed in the proposal (58 FR at 66098–66100), the Development Document for Proposed Effluent Limitations Guidelines and Standards for the Pulp, Paper and Paperboard Point Source Category, also referred to as the proposal Technical Development Document (EPA 821–R93–019), and EPA's response to comments on this issue (DCN 14497, Vol. 1).

Although the Agency is codifying the revised subcategorization scheme for the whole industry today, EPA will promulgate revised effluent limitations guidelines and standards, as appropriate, for this industrial category in stages consisting of several subcategories at a time. The Agency has labeled these groupings of subcategories as ''Phase I,'' ''Phase II,'' and ''Phase III.'' The schedule for these phases is explained below and in the following table.

TABLE II–2.—FINAL CODIFIED SUBCATEGORIZATION SCHEME (WITH PREVIOUS SUBPARTS NOTED) AND SCHEDULE FOR PROMULGATING EFFLUENT LIMITATIONS GUIDELINES AND STANDARDS (BY PHASE)

Final codified subpart	Final subcategorization scheme	Types of facilities covered including previous subcategories (with previous 40 CFR part 430 subparts noted)	Promulgation schedule (phase)*
A	Dissolving Kraft	Dissolving Kraft (F)	III
B	Bleached Papergrade Kraft and Soda.	Market Bleached Kraft (G), BCT Bleached Kraft (H), Fine Bleached Kraft (I), Soda (P).	I**
C	Unbleached Kraft	Unbleached Kraft (A) Linerboard Bag and Other Products Unbleached Kraft and Semi-Chemical (D, V)	II
D	Dissolving Sulfite	Dissolving Sulfite (K) Nitration Viscose Cellophane Acetate	III
E	Papergrade Sulfite Calcium-, Magnesium-, and Sodium-based pulps. Ammonium-based pulps. Specialty grade pulps.	Papergrade Sulfite (J, U) Blow Pit Wash Drum Wash	I**
F	Semi-Chemical	Semi-Chemical (B) Ammonia Sodium	II
G	Mechanical Pulp	Groundwood-Thermo-Mechanical (M), Groundwood-Coarse, Molded, News (N), Groundwood-Fine Papers (O), Groundwood-Chemi-Mechanical (L).	II
H	Non-Wood Chemical Pulp	Miscellaneous mills not covered by a specific subpart	II
I	Secondary Fiber Deink	Deink Secondary Fiber (Q) Fine Papers Tissue Papers Newsprint	II
J	Secondary Fiber Non-Deink	Tissue from Wastepaper (T), Paperboard from Wastepaper (E) Corrugating Medium Non-Corrugating Medium Wastepaper-Molded Products (W) Builders' Paper and Roofing Felt (40 CFR Part 431, Subpart A)	II
K	Fine and Lightweight Papers from Purchased Pulp.	Non integrated Fine Papers (R) Wood Fiber Furnish Cotton Fiber Furnish Nonintegrated Lightweight Papers (X) Lightweight Papers Lightweight Electrical Papers	II

TABLE II–2.—FINAL CODIFIED SUBCATEGORIZATION SCHEME (WITH PREVIOUS SUBPARTS NOTED) AND SCHEDULE FOR PROMULGATING EFFLUENT LIMITATIONS GUIDELINES AND STANDARDS (BY PHASE)—Continued

Final codified subpart	Final subcategorization scheme	Types of facilities covered including previous subcategories (with previous 40 CFR part 430 subparts noted)	Promulgation schedule (phase)*
L	Tissue, Filter, Non-Woven, and Paperboard from Purchased Pulp.	Non integrated Tissue Papers (S) Filter and Non-Woven (Y) Paperboard (Z)	II

*Phase I: Promulgation today; Phases II and III: Promulgation dates to be determined.
**Certain parameter limits to be promulgated as part of Phase II.

a. Bleached Papergrade Kraft and Soda Subcategory and Papergrade Sulfite Subcategory (subparts B and E). Under the consent decree entered in the case *Environmental Defense Fund and National Wildlife Federation* v. *Thomas,* Civ. No. 85–0973 (D.D.C.), and subsequently amended, EPA was required to use its best efforts to promulgate regulations addressing discharges of dioxins and furans from 104 bleaching pulp mills by June 17, 1995. Despite making its best efforts, EPA was not able to promulgate final effluent limitations guidelines and standards applicable to those mills by that date. However, in today's rule, EPA is promulgating effluent limitations guidelines and standards for mills in the Bleached Papergrade Kraft and Soda subcategory (subpart B) and the Papergrade Sulfite subcategory (subpart E), thereby addressing discharges from 96 of the mills covered by the consent decree. Regulating the discharge of dioxins and furans from the mills in the dissolving kraft and dissolving sulfite subcategories remains a very high priority; as discussed in more detail below, EPA will promulgate effluent limitations guidelines and standards for discharges of dioxins and furans from those mills as soon as possible.

b. Dissolving Kraft Subcategory and Dissolving Sulfite Subcategory (subparts A and D). EPA is evaluating comments and preliminary new data received since proposal affecting the Dissolving Kraft and Dissolving Sulfite subcategories. The Agency anticipates that the final effluent limitations guidelines and standards for these subcategories will be based on different technologies than those that served as the basis for the proposed limitations and standards. For example, EPA has received data suggesting that oxygen delignification is not a feasible process for making some dissolving pulp products, particularly high grade products. In addition, some use of hypochlorite appears to be necessary to maintain product quality for some products. Affected companies have undertaken laboratory studies and mill trials to develop alternative bleaching processes and to document the effects on wastewater and air emissions. The Agency expects to receive data on these studies and trials as the companies' efforts progress.

Because EPA's record presently is incomplete, EPA is not promulgating final effluent limitations guidelines and standards for these subcategories now. Even in the absence of these limitations and standards, however, EPA anticipates that alternative bleaching processes developed as a result of these studies and trials should contribute to substantial reductions in the generation and release of pollutants, when compared to current operating practices. Among the pollutants EPA expects to be reduced are dioxin, furan, and chlorinated phenolic pollutants at levels comparable to those achieved by subpart B mills. The Agency also expects to see significant reductions in AOX and chloroform. EPA encourages mills in these subcategories to expeditiously complete developmental work that will facilitate installation of alternative process technologies that achieve these pollution prevention goals.

As defined today, the Dissolving Sulfite subcategory (subpart D) applies to discharges from dissolving sulfite mills, including mills that manufacture dissolving grade sulfite pulps and papergrade sulfite pulps at the same site. See 40 CFR 430.40. This definition is based on EPA's analysis of data collected in the ''1990 National Census of Pulp, Paper, and Paperboard Manufacturing Facilities.'' Data from the survey indicate that most sulfite mills that produce dissolving grade pulp do so at a very high percentage (typically greater than 85 percent) of their total pulp output. It has come to EPA's attention, however, that some specialty grade papergrade sulfite mills now have the capability to produce low percentages of dissolving grade pulp. EPA does not intend for these mills to be regulated under subpart D; rather, they are specialty grade sulfite mills within the Papergrade Sulfite subcategory (subpart E).

c. Schedule for the Remaining Subcategories. EPA is assessing comments and data received since proposal for the remaining eight subcategories. These eight subcategories are: (1) Unbleached Kraft; (2) Semi-Chemical; (3) Mechanical Pulp; (4) Non-Wood Chemical Pulp; (5) Secondary Fiber Deink; (6) Secondary Fiber Non-Deink; (7) Fine and Lightweight Papers from Purchased Pulp; and (8) Tissue, Filter, Non-Woven, and Paperboard from Purchased Pulp. For example, EPA has received additional information from an industry-sponsored survey of secondary fiber non-deink mills. The Agency also has received additional data from mills in other subcategories, including semi-chemical, unbleached kraft, and secondary fiber deink. EPA plans to promulgate effluent limitations guidelines and standards for these subcategories in the near future. It should be noted that air emission standards are being promulgated today for these subcategories.

2. Best Practicable Control Technology Currently Available (BPT) and Best Conventional Pollutant Control Technology (BCT) for the Bleached Papergrade Kraft and Soda Subcategory and the Papergrade Sulfite Subcategory

Although the Agency has the statutory authority to revise BPT effluent limitations guidelines, the Agency is exercising its discretion not to revise BPT for Subparts B and E at this time. In addition, none of the technologies that EPA evaluated for the purpose of setting more stringent effluent limitations for the conventional pollutants biochemical oxygen demand (BOD_5) and total suspended solids (TSS) passed the BCT cost test for either subcategory. Therefore, EPA is not revising BCT effluent limitations guidelines for Subparts B and E in this rulemaking.

3. Final Regulations for the Bleached Papergrade Kraft and Soda Subcategory (Subpart B)

a. Pollutants Regulated. In this rule, EPA is promulgating effluent limitations guidelines and standards for 2,3,7,8–TCDD (''dioxin''), 2,3,7,8–TCDF (''furan''), 12 specific chlorinated phenolic pollutants, the volatile organic pollutant, chloroform, and adsorbable organic halides (AOX). EPA is also promulgating new source performance standards for BOD_5 and TSS. As explained in section VI.B.3 below, the Agency is not promulgating effluent limitations guidelines and standards for chemical oxygen demand (COD) at this time. EPA is also not promulgating effluent limitations guidelines and standards for methylene chloride, methyl ethyl ketone (MEK), acetone, or color. See Section VI.B.3.

b. Best Available Technology Economically Achievable (BAT). After re-evaluating technologies for mills in the Bleached Papergrade Kraft and Soda subcategory, EPA has determined that the model technology for effluent limitations based on best available technology economically achievable (BAT) should be complete (100 percent) substitution of chlorine dioxide for chlorine as the key process technology, along with other in-process technologies and existing end-of-pipe biological treatment technologies. See Section VI.B.5.a.

c. New Source Performance Standards. The Agency has determined that the technology basis defining new source performance standards (NSPS) for toxics and non-conventional pollutants is the BAT model technology with the addition of oxygen delignification and/or extended cooking. See Section VI.B.5.b. EPA is also promulgating NSPS for the conventional pollutants BOD_5 and TSS.

As discussed elsewhere in today's **Federal Register**, EPA also is soliciting comment and intends to gather additional data with respect to totally chlorine-free processes that may be available for the full range of market products. EPA will determine whether to propose revisions to NSPS based upon TCF and, if appropriate, flow reduction technologies.

In this rule, NSPS are effective June 15, 1998. A source is a new source if it meets the definition of new source in 40 CFR 430.01(j) and if it commences construction after that date.

d. Pretreatment Standards. The Agency is promulgating pretreatment standards for existing sources (PSES) based on the BAT model technology, excluding biological treatment. EPA is promulgating pretreatment standards for new sources (PSNS) based on the model technology for NSPS, excluding secondary biological treatment. A source is a new source for purposes of PSNS if it meets the definition of new source in 40 CFR 430.01(j) and if it commences construction after the date of proposal, i.e., December 17, 1993. However, a new indirect discharger is not required to meet PSNS for subpart B until those standards become effective, i.e., June 15, 1998.

e. Voluntary Incentives Program Based on Advanced Technology. As noted earlier in this notice, EPA's vision of long-term environmental goals for the pulp and paper industry includes continuing research and progress toward environmental improvement. EPA recognizes that technologies exist, or are currently under development at some mills, that have the ability to surpass the environmental protection that would be provided by compliance with the baseline BAT effluent limitations guidelines and NSPS promulgated today. The Agency believes that individual mills could be encouraged to explore and install these advanced technologies. Accordingly, EPA is establishing a Voluntary Advanced Technology Incentives Program for direct discharging mills in the Bleached Papergrade Kraft and Soda subcategory. This program is discussed in Section IX.

4. Final Regulations for the Papergrade Sulfite Subcategory (Subpart E)

a. Segmentation of Subpart E and Best Available Technology Economically Achievable (BAT). After assessing comments and data received after the proposal, EPA is segmenting the Papergrade Sulfite subcategory to account for production of specialty grade pulps and the applicability of technologies to ammonium-based pulping processes.

The Agency is segmenting this subcategory and establishing BAT technology bases set forth below. (EPA has established the same segments for new source performance standards and pretreatment standards for subpart E.)

(1) For production of pulp and paper at papergrade sulfite mills using an acidic cooking liquor of calcium, magnesium, or sodium sulfite (unless the mill is a specialty grade sulfite mill), the BAT technology basis is totally chlorine-free bleaching. EPA is promulgating limitations for AOX for this segment. See Section VI.B.6.b.

(2) For production of pulp and paper at papergrade sulfite mills using an acidic cooking liquor of ammonium sulfite (unless the mill is a specialty grade sulfite mill), the BAT technology bases for this segment are elemental chlorine-free (ECF) technologies (complete substitution of chlorine dioxide for elemental chlorine, peroxide enhanced extraction, and elimination of hypochlorite) and biological wastewater treatment. EPA is promulgating effluent limitations for dioxin, furan, and 12 chlorinated phenolic pollutants for this segment, but is reserving promulgation of chloroform, AOX, and COD limitations until sufficient performance data are available. See Section VI.B.6.b.

(3) For production of pulp and paper at specialty grade sulfite mills, the BAT technology bases for this segment are ECF technologies (complete substitution of chlorine dioxide for elemental chlorine, oxygen and peroxide enhanced extraction, and elimination of hypochlorite) and biological wastewater treatment. EPA is promulgating effluent limitations for dioxin, furan, and 12 chlorinated phenolic pollutants for this segment, but is reserving promulgation of chloroform, AOX, and COD limitations for this segment until sufficient performance data are available. See Section VI.B.6.b.

b. New Source Performance Standards. For each segment identified above, EPA is establishing NSPS based on the model BAT technologies selected for the particular segment. The pollutants are the same as those regulated by BAT for the applicable segment. EPA is also exercising its discretion not to revise NSPS for BOD_5, TSS, and pH. See Section VI.B.6.c.

c. Pretreatment Standards. The Agency is promulgating pretreatment standards for the segments identified above. The pretreatment standards for existing sources (PSES) control the same pollutants controlled by BAT for the particular segment. EPA is promulgating pretreatment standards for new sources (PSNS) for the same toxic and nonconventional pollutants controlled by NSPS for the particular segment. A source is a new source for purposes of PSNS if it meets the definition of new source in 40 CFR 430.01(j) and if it commences construction after the date of proposal, i.e., December 17, 1993. However, a new indirect discharger is not required to meet PSNS for subpart E until those standards become effective, i.e., June 15, 1998. The technology bases for PSES and PSNS for the Papergrade Sulfite subcategory are the same as those chosen for the particular segments at the BAT and NSPS levels, respectively, excluding secondary biological treatment. For the ammonium-based and specialty grade segments, EPA is deferring making a pass-through determination, and hence,

promulgating pretreatment standards, for chloroform and AOX until it has sufficient performance data to set limitations and standards for those parameters. EPA is promulgating pretreatment standards for AOX for the calcium-, magnesium-, and sodium-based sulfite segment. EPA has made no pass-through determination at this time for COD for any segment. More details are described below in section VI.B.6.d.

5. Best Management Practices for the Bleached Papergrade Kraft and Soda Subcategory and the Papergrade Sulfite Subcategory

EPA is codifying best management practices (BMPs) applicable to direct- and indirect-discharging mills in the Bleached Papergrade Kraft and Soda and Papergrade Sulfite subcategories. In response to comments, EPA changed the scope of the BMPs to focus on spent pulping liquor, turpentine, and soap control and to allow for more flexibility in implementation. See Section VI.B.7.

III. Background

A. Prior Regulations, Proposal, Notices of Data Availability, and Public Participation

The regulations that EPA developed for the pulp, paper, and paperboard industry prior to this date are discussed in the proposal. See 58 FR at 66089–92.

In a **Federal Register** notice published on December 17, 1993 (58 FR 66078), EPA proposed integrated air and water rules that included proposed limitations and standards to reduce the discharge of toxic, conventional, and nonconventional pollutants in wastewaters and to reduce emissions of hazardous air pollutants from the pulp, paper, and paperboard industry. These proposed integrated regulations subsequently became known as ''the Cluster Rules.'' EPA held a public hearing in Washington, D.C., on February 10, 1994, to provide interested persons the opportunity for oral presentation of data, views, or arguments concerning the proposed pretreatment standards. On March 17, 1994 (59 FR 12567), EPA published a correction notice to the proposed rules and extended the comment period to April 18, 1994.

In the preamble to the proposed rules, EPA solicited data on various issues and questions related to the proposed effluent limitations guidelines and standards and air emissions standards. The Agency received and added new material to the Air and Water Dockets. In a notice of data availability published on February 22, 1995 (60 FR 9813), EPA announced the availability of new data related to the proposed air emissions standards. Those new data are located in Air Docket A–92–40.

In a second notice of data availability published on July 5, 1995 (60 FR 34938), EPA announced the availability of new information and data related to the proposed effluent limitations guidelines and standards. Those new data are located starting at Section 18.0 of the Post-Proposal Rulemaking Record, which is a continuation of the proposal record. The Post-Proposal Rulemaking Record is located in the Water Docket. EPA did not solicit comment on the new air and water data in either notice.

On March 8, 1996, EPA published a **Federal Register** notice pertaining to the air portions of the proposed rules and announced the availability of supplemental information (61 FR 9383). The comment period for that notice closed on April 8, 1996. EPA also proposed MACT standards for mechanical pulping mills, secondary fiber pulping (deinked and non-deinked) mills, and non-wood mills, and asked for additional information on these mills. Furthermore, EPA announced that it was continuing to investigate paper machines and that no MACT standard for paper machines was being proposed at the time. EPA acknowledged an industry testing program was underway; EPA also acknowledged its request to States for data on non-wood pulping mills. EPA requested additional data on HAP emissions from, and control technologies for, paper machines to supplement information previously collected under the MACT process.

On July 15, 1996, the Agency published a **Federal Register** notice announcing the Agency's thinking, based on preliminary evaluation of the supplemented record and stakeholder discussions, regarding the technology options being considered as a basis for final effluent limitations guidelines and standards for the proposed Bleached Papergrade Kraft and Soda and Papergrade Sulfite subcategories (61 FR 36835). Data were added to the record and comments were solicited from interested parties. The comment period for that notice closed on August 14, 1996.

The Agency has held numerous meetings on these proposed integrated rules with many pulp and paper industry stakeholders, including a trade association (American Forest and Paper Association, or AF&PA), numerous individual companies, environmental groups, States, laboratories, consultants and vendors, labor unions, and other interested parties. EPA has added materials to the Air and Water Dockets to document these meetings.

B. Clean Air Act Statutory Authority

Section 112(b) of the CAA lists 189 HAPs and directs EPA to develop rules to control all major and some area sources emitting HAPs. Major sources are facilities that emit 10 tons of any single HAP or 25 tons of total HAPs annually. On July 16, 1992 (57 FR 31576), EPA published a list of major and area sources for which NESHAP are to be promulgated. The goal of NESHAP is to require the implementation of maximum achievable control technology (MACT) to reduce emissions and, therefore, reduce public health hazards from pollutants emitted from stationary sources. Pulp and paper production was listed as a category of major sources. On December 3, 1993 (58 FR 83941), EPA published a schedule for promulgating standards for the listed major and area sources. Standards for the pulp and paper source category were scheduled for promulgation by November 1997.

NESHAP established under section 112 of the Act reflect MACT or:

> * * * the maximum degree of reduction in emissions of the [HAP] * * * that the Administrator, taking into consideration the cost of achieving such emission reduction, and any nonair quality health and environmental impacts and energy requirements, determines is achievable for new or existing sources in the category or subcategory to which such emission standard applies * * * (See CAA section 112(d)(2)).

C. Clean Water Act Statutory Authority

The objective of the Clean Water Act (CWA) is to ''restore and maintain the chemical, physical, and biological integrity of the Nation's waters.'' CWA Section 101(a). To assist in achieving this objective, EPA issues effluent limitations guidelines, pretreatment standards, and new source performance standards for industrial dischargers. The statutory requirements of these guidelines and standards are summarized in the proposal. See 58 FR at 66088–89.

D. Other EPA Activities Concerning the Pulp and Paper Industry

1. Land Disposal Restrictions Activities

At the time of proposal, it appeared that many of the surface impoundments used for wastewater treatment in the pulp and paper industry might become subject to Resource Conservation and Recovery Act (RCRA) regulation under the Land Disposal Restriction (LDR) program. See 58 FR at 66091. This program establishes treatment standards that hazardous wastes must meet before

they can be land disposed—placement in surface impoundments being a type of land disposal. This requirement extends not only to wastes that are identified or listed as hazardous under the RCRA rules when they are land disposed, but also to wastes that are hazardous when generated, cease to be hazardous as a result of dilution, and are then disposed. *Chemical Waste Management* v. *EPA,* 976 F.2d 2 (D.C. Cir. 1992), *cert. denied,* 507 U.S. 1057 (1993).

The pulp and paper industry has many mills that fit this pattern: Numerous wastewater streams are generated, some of them exhibit a characteristic of hazardous waste (corrosivity or toxicity in particular), the streams are commingled before centralized wastewater treatment occurs, and, in the course of commingling, the wastes no longer exhibit the characteristic, and the commingled wastewaters are then treated in a surface impoundment. EPA actually took action to temporarily defer applying LDR rules to this type of situation in the pulp and paper industry in order to allow unhindered promulgation of these Cluster Rules. See 61 FR at 15660, 15574 (April 8, 1996).

This issue, however, is now moot, at least for the time being. As discussed in the April 8, 1996, notice partially withdrawing the LDR Phase III final rule, 61 FR 15660, the Land Disposal Program Flexibility Act of 1996 provides, among other things, that RCRA characteristic wastewaters are no longer prohibited from land disposal once they are rendered nonhazardous, provided that they are managed in either a treatment system whose ultimate discharge is regulated under the CWA (including both direct and indirect dischargers), a CWA-equivalent treatment system, or a Class I nonhazardous injection well regulated under the Safe Drinking Water Act. Under the Land Disposal Program Flexibility Act of 1996, the LDR treatment standards for RCRA characteristic wastes in the pulp and paper industry (or any other industry) do not apply if the characteristic is removed and the wastes are subsequently treated in a surface impoundment that is part of a wastewater treatment system whose ultimate discharge is regulated by the CWA, or if a mill's treatment system provides wastewater treatment that is CWA-equivalent.

It should be noted that the Act requires EPA to undertake a five-year study to determine any potential risks posed by cross-media transfer of hazardous constituents from surface impoundments that accept these ''de-characterized'' wastes and warrant RCRA regulation. The findings of this study, begun by the Agency in April 1996, could eventually result in RCRA regulations for these units.

2. Land Application of Sludges

Under the Consent Decree entered in the case *Environmental Defense Fund and National Wildlife Federation* v. *Thomas,* Civ. No. 85–0973 (D.D.C.), EPA was required to propose rules under section 6 of the Toxic Substances Control Act (TSCA) to regulate the use of sludge produced from the treatment of wastewater effluent of pulp and paper mills using chlorine and chlorine-derivative bleaching processes (56 FR 21802; Docket OPTS–62100). EPA published the proposed rules on May 10, 1991. The proposed regulations sought to establish a final maximum dioxin and furan soil concentration of ten parts per trillion (ppt) toxic equivalents (TEQ) and site management practices for the land application of bleached kraft and sulfite mill sludge. EPA originally planned to promulgate the rule by November 1992.

On December 11, 1992, EPA informed the plaintiffs of the Consent Decree that the decision on the promulgation of the proposed sludge land application rule was deferred pending promulgation of the integrated rulemaking for effluent limitations guidelines and standards and national emission standards. EPA reasoned that the effluent limitations guidelines and standards and air emissions standards would have the potential to result in bleach plant process changes that EPA expected would result in reduced dioxin and furan contamination levels in sludge. In addition, EPA was awaiting the results of its dioxin reassessment activities.

In light of the anticipated impact of the effluent limitations guidelines and standards and air emissions standards on reducing dioxin in pulp and paper mill sludges, as well as reduction in sludge dioxin levels from industry-initiated improvements, EPA chose to defer the decision on promulgation of the final sludge land application rule. When EPA has determined the final impact of today's effluent limitations guidelines and standards on sludge dioxin concentration, EPA will re-evaluate the risk from sludge land application and will choose the appropriate regulatory or non-regulatory mechanism to address the situation.

Prior to that determination, however, EPA has taken action to achieve risk reduction for situations where sludge is being applied to land.

While awaiting completion of the effluent limitations guidelines and standards, air emission standards and the dioxin reassessment, EPA has promoted the establishment of an industry environmental stewardship program for the practice of sludge land application.

3. Hazardous Listing Determination

Under the consent decree entered in the case of *Environmental Defense Fund* v. *Browner,* Civ. No. 89–0598 (D.D.C.), ''EPA shall promulgate a listing determination for sludges from pulp and paper mill effluent on or before the date 24 months after promulgation of an effluent guideline regulation under the Clean Water Act for pulp and paper mills. This listing determination shall be proposed for public comment on or before the date 12 months after promulgation of such effluent guideline regulation. However, EPA shall not be required to propose or promulgate such a listing determination if the final rule for the pending effluent guideline rulemaking (amending 40 CFR part 430) under the Clean Water Act to regulate the discharge of dioxins from pulp and paper mills is based on the use of oxygen delignification, ozone bleaching, prenox bleaching, enzymatic bleaching, hydrogen peroxide bleaching, oxygen and peroxide enhanced extraction, or any other technology involving substantially similar reductions in uses of chlorine-containing compounds. If EPA concludes that the final effluent guideline regulation is based on use of such a process and that, as a result, no listing determination is required, EPA shall so inform plaintiff in writing within 30 days of the promulgation of the effluent guideline regulation.''

At this time, EPA is assessing whether the technology bases for the effluent limitations guidelines and standards promulgated today would fulfill the condition described in the Consent Decree. If so, the Agency would conclude that a listing determination is not warranted. If EPA concludes it does not fulfill the condition, a listing determination would be conducted.

4. Dioxin Reassessment

In the spring of 1991, EPA initiated an effort to reassess the scientific bases for estimating dioxin risk. The activities associated with the dioxin reassessment before proposal are described in the proposal. See 58 FR at 66092–93. After the proposal, in September 1994, EPA published a public review draft of this effort, which is commonly referred to as the EPA Dioxin Reassessment. The draft reassessment addressed not only the health effects of dioxin-like chemicals

but also dioxin sources and pathways for human exposure. Since the draft documents were released, EPA received thousands of pages of public comments. EPA submitted the documents to formal peer review by the EPA Science Advisory Board (SAB). The SAB was supportive of the overall reassessment effort and endorsed the major conclusions of the exposure document and chapters one through seven of the health document. They did, however, believe that additional work was needed on the dose-response modeling chapter and the risk characterization chapter.

The reassessment is currently being revised and updated in response to public comments. The two chapters singled out by the SAB are being revised by specially established panels composed of scientists from both inside and outside the Agency. Once the work of the special panels is completed these two revised chapters will be examined by peer review panels, and then resubmitted to the SAB for final review. EPA currently anticipates completion and release of the dioxin reassessment in the spring of 1998.

5. Clean Water Act Section 307(a) Petition

On September 14, 1993, the Natural Resources Defense Council and the Natural Resources Council of Maine filed with EPA on behalf of 57 individuals and environmental groups a petition to prohibit the discharge of dioxin by pulp and paper mills. The petitioners ask EPA to accomplish this prohibition by prohibiting the use of chlorine and chlorine-containing compounds as inputs in the manufacturing process. The petitioners believe that the prohibition is warranted by the dangers to human health and the environment posed by dioxin. The petitioners invoke CWA section 307(a)(2) for authority for such a prohibition.

Authority for the petition and requested prohibition derives from a different section of the Clean Water Act than today's technology-based effluent limitations guidelines and standards. However, because the petition raised many issues related to the effluent guidelines rulemaking, EPA solicited comment on the issues raised in the petition at the time it proposed effluent limitations guidelines and standards for the pulp and paper industry. See 58 FR at 66174. EPA received thousands of pages of comments and expects to issue a decision granting or denying the petition after completion of the dioxin reassessment.

6. Cooling Tower Intake Assessment

EPA is developing regulations under section 316(b) of the Clean Water Act, which provides that any standard established pursuant to Section 301 or 306 and applicable to a point source shall require that the location, design, construction, and capacity of cooling water intake structures reflect the best technology available for minimizing adverse environmental impact. Section 316(b) applies only to the intake of water, not the discharge. A primary goal of the regulation that EPA is developing would be to minimize the destruction of fish and other aquatic organisms as they are drawn into an industrial facility's water intake. EPA plans to conduct screening level and detailed surveys to estimate the number and type of facilities that utilize cooling water intake structures and thus are within the scope of Section 316(b). The pulp and paper industry uses a significant amount of cooling water. EPA intends to gather data on pulp and paper facilities during the Section 316(b) rulemaking through questionnaires and site visits. The Section 316(b) regulation is scheduled for proposal in 1999 with the final rule due in 2001.

IV. Changes in the Industry Since Proposal

A description of the pulp and paper industry, including manufacturing processes, pulping processes, bleaching processes, and papermaking is included in the proposal. See 58 FR at 66095–96.

The proposed water regulation encompassed the entire pulp and paper industry of approximately 500 facilities. The proposed air regulations (MACT I and MACT III) covered approximately the same number. Under today's action, approximately 490 mills will be covered by the final MACT I and MACT III rules. Of these mills, 155 will be affected by MACT standards for mills that chemically pulp wood. A subset of these mills—96 mills—will be covered by the final effluent limitations guidelines and standards promulgated today.

Since the proposal, some facilities have modified their processes. There has been a substantial move toward elemental chlorine-free (ECF) bleaching, and mills are continuing to increase their substitution of chlorine dioxide for chlorine. Additionally, more mills are utilizing oxygen delignification and extended cooking than at proposal. All these developments result in decreased discharges of dioxins and furans to receiving waters.

The U.S. pulp and paper industry's involvement with totally chlorine-free (TCF) bleaching has not changed substantially since proposal. As was the case at the time of proposal, only one U.S. mill produces TCF kraft pulp; however, this mill is now able to attain higher brightness than was achieved at the time of the proposal.

The number of companies in the industry is constantly changing as new companies enter the market and other companies leave the industry or merge with other companies. In the subcategories now designated as Subparts B and E, only one mill has closed since proposal and one has changed subcategories. No new Subpart B or E mills have commenced construction since the time of proposal.

For more details on the technology status of mills covered by the final Cluster Rules, see the ''Supplemental Technical Development Document,'' DCN 14487.

V. Summary of Data Gathering Activities Since Proposal

A. Data Gathering for the Development of Air Emissions Standards

To develop today's standards, extensive data collection and technical analyses were conducted. Prior to proposal, EPA used information in a 1990 census of pulp and paper mills, a 1992 voluntary mill survey, an EPA sampling program, site visits at a number of mills, and a review of State and local regulations to obtain information on emissions, emission control technologies, and emission control costs for pulp and paper mill emission points. After proposal, EPA obtained additional information from the industry. This information included test reports from a variety of testing programs, as well as numerous reports, studies, and memoranda on other issues related to the development of emission control requirements. The information collected before and after proposal was used as the technical basis in determining the MACT level of control.

EPA also used information on pulp and paper mill production processes available in the general literature and information on control technology performance and cost information developed under other EPA standards to determine MACT.

Industry commenters indicated that they would be completing a comprehensive emission testing program after proposal, and EPA considered this information to be vital to the development of the final regulation. Therefore, EPA agreed to consider the new data and issued two notices of availability of supplemental information on February 22, 1995 (60 FR 9813) and March 8, 1996 (61 FR

9383) announcing the information and offering the likely implications to the final rule. The opportunity for a public hearing was offered on the March 8, 1996 action, but no request for a hearing was received. Public comments on the March 8, 1996 action were accepted from March 8, 1996 to April 8, 1996. Commenters included industry representatives, States, environmental organizations, and other members of the public.

In the March 8, 1996 supplemental notice, EPA solicited additional data and comments on proposed changes to the December 17, 1993 proposed rule.

Data added to Air Docket A–92–40 since the March 8, 1996 supplemental notice are located in section IV of this docket. These items include additional information on sulfite mills (IV–D1–98, IV–D1–100), comments on definitions (IV–D1–97, IV–D1–99, IV–D1–104), comments on the emission factor document (IV–D1–102), clarification of the 1992 MACT survey responses (IV–D1–101), and other information.

B. Data Gathering for the Development of Effluent Limitations Guidelines and Standards

EPA has gathered a substantial amount of new information and data since proposal in connection with today's water regulations. Much of this information was collected with the cooperation and support of the American Forest and Paper Association (AF&PA) and the National Council of the Paper Industry for Air and Stream Improvement (NCASI), and with the assistance of many individual mills in the United States. Additional information also has been submitted by environmental groups. EPA has gathered additional information from pulp and paper mills outside of the United States, primarily in Canada and Europe.

Some of the new information and data were generated through EPA-sponsored field sampling or visits at individual mills in the United States, Canada, and Europe. Additional sampling data were voluntarily supplied by many facilities, and information from laboratory and pilot-scale studies was shared with the Agency. In order to clarify comments on the proposal, the Agency also gathered information from several surveys administered by AF&PA and NCASI, including data on secondary fiber mill processes, recovery furnace capacities, best management practices, capital and operating costs, process operations, and impacts of technology on the recovery cycle.

The data gathering activities for this final rule are summarized in detail in the proposal, see 58 FR at 66096, and in the July 15, 1996, notice of data availability, see 61 FR at 36837.

VI. Summary of the Major Changes Since Proposal and Rationale for the Selection of the Final Regulations

A. Air Emission Standards

At proposal, the standards for mills that chemically pulp wood were based on the MACT floor control level. A uniform set of requirements would have applied to all mills that chemically pulp wood using the kraft, sulfite, soda, or semi-chemical process. The proposed standards would have required that, with the exception of some with very low volumetric and mass flow rates, all emission points in the pulping and bleaching area of these mills be controlled. The proposed standards also would have required that all wastewater streams produced in the pulping area of the mill be controlled except for those with a specified low concentration of hazardous air pollutants (HAPs). The proposed control technology basis was to enclose any open process equipment in the pulping and bleaching areas and route all vents and pulping wastewater to a control device. The proposed control technology basis was combustion for pulping area vent sources, scrubbing for bleaching area vent sources, and steam stripping for pulping wastewater.

Following proposal, EPA received a large number of comments and data to support the need for subcategories with separate MACT standards for each. After considering the data and comments, the final rule specifies separate MACT requirements for each of the four types of pulping processes subject to the standard. The low volumetric and mass flow rates for pulping and bleaching vents and the low concentration value for pulping wastewater are no longer used to determine applicability to the standard. Rather, for each subcategory, the standard lists the specific equipment and pulping area condensates that require control.

For each subcategory, the Agency determined the MACT floor level of control for existing and new sources, and analyzed the cost and impacts for control options more stringent than the floor. This analysis is presented in chapter 20 of the background information document for the promulgated NESHAP, and is also discussed in the proposal preamble. Based on the results of this analysis, the Agency determined that it was not reasonable to go beyond the MACT floor level of control for sources at kraft, semi-chemical, and sulfite pulp mills, bleaching systems, or kraft condensate systems. The Agency determined that control beyond the floor at soda mills was technically feasible and could be achieved at a reasonable cost. A discussion of the Agency's decision for soda mills is presented in the March 8 supplemental notice and in section VI.A.5.

In response to comments received on the proposed standards, several changes have been made to the final rule. While some of these changes are clarifications designed to make the Agency's intent clearer, a number of them are significant changes to the compliance requirements. A summary of the substantive comments and changes made since the proposal are described in the following sections. Detailed Agency responses to public comments and the revised analysis for the final rule are contained in the background information document and docket. See Section X.A.

1. Definition of Source

At proposal, EPA defined a single broad source that was subject to both existing and new source MACT. That single source included the pulping processes, the bleaching processes, and the pulping and bleaching process wastewater streams at a pulp and paper mill. EPA also considered and solicited comments on the concept of multiple smaller sources that would be subject to the existing and new source MACT requirements.

In defining the source at proposal, EPA considered the impact of the definition on mills making changes to existing facilities. In general, the narrower the definition of source, the more likely it is that changes to existing facilities would be deemed ''new sources'' under the CAA. With limited exceptions, these new sources must be in compliance with new source MACT standards on the date of startup or June 15, 1998, whichever is later. However, the CAA and the CWA differ regarding applicability requirements and compliance deadlines for new sources. As such, EPA was concerned that a pulp and paper mill planning to construct or reconstruct a source of HAPs between proposal and promulgation of these integrated regulations would find it necessary to plan for compliance with the NESHAP (required on the date it becomes effective) without knowing the requirements of the effluent guidelines for the industry. This situation appeared to be inconsistent with one objective of the integrated rulemaking: allowing facilities to do integrated compliance planning. EPA thus determined that the

best solution to these concerns was to define a single broad source at proposal.

In the March 8, 1996 supplemental notice, EPA indicated a continuing inclination for a broad, single source definition. EPA also discussed broadening the source definition further to include papermaking systems and causticizing equipment and solicited comments on these additions. EPA's reason for considering the addition of these two equipment systems was to facilitate implementation of the clean condensate alternative for kraft mills.

Commenters on the proposed standards and on the March 8 notice largely agreed with the broad, single source definition. One commenter supported a narrow source definition, noting it was inappropriate for new construction at an existing source to be classified as a modification (and hence subject to existing source MACT). The commenter further stated that the final regulation should specify a narrow source definition for determining applicability to new source MACT. Some commenters also stated that EPA should clarify for the final regulation that mill processes not included in the source definition should not be subject to future case-by-case MACT requirements under CAA section 112(g).

EPA considered all of the comments received on this issue since proposal and maintains that the definition of source should be broad enough such that small changes to an existing mill do not trigger new source requirements in the NESHAP. However, EPA also agrees with the commenter that at some point, changes to an existing mill are substantial enough that new source MACT should apply.

In considering how best to define the source, EPA did not want to define it so narrowly that changes to or additions of individual pieces of equipment would be subject to new source MACT and be required to be in compliance with new source MACT at startup. In fact, EPA was concerned that to do so could discourage mills from implementing pollution-prevention changes as soon as practicable after promulgation of the Cluster Rules. Such changes might include replacing an existing rotary vacuum washer system with a low-flow washer system or installing an oxygen delignification system, both of which, if subject to existing source requirements, would get the eight-year compliance time, discussed later in section VI.A.3.b. Once mills are complying with the existing source MACT requirements, it also did not seem reasonable that they should have to tear out and rebuild that vent collection system to accommodate small equipment changes in the future unless those changes occurred along with other substantial changes that would justify rebuilding the vent collection system.

For the final regulation, EPA is defining the affected source to which existing MACT requirements apply to include the total of all HAP emission points in the pulping and bleaching systems (including pulping condensates). In considering how mills might engineer their vent collection systems and control devices, EPA has concluded that the following actions occurring after proposal are substantial enough that new source MACT requirements apply:

- A pulping or bleaching system at an existing mill is constructed or reconstructed; or
- A new pulping line or bleaching line is added to an existing mill.

The proposal date for mills that chemically pulp wood is December 17, 1993. The proposal date for mills that mechanically pulp wood, pulp secondary fibers, or pulp non-wood materials is March 8, 1996.

The final regulation also provides for an alternative definition of source to facilitate implementation of the clean condensate alternative. For mills using the alternative to comply with the kraft pulping standards, the final regulation defines a single broad source that includes the total of all pulping, bleach, causticizing, and papermaking systems. A more detailed discussion of the clean condensate alternative is given in section VI.A.3.d.

EPA agrees with the commenters that certain emission points that are excluded from the definition of affected source in today's rule, or are subject to a determination that MACT for these operations is no control, should not be required to undergo CAA section 112(g) review. The sources that have been so identified are wood yard operations (including wood piles); tall oil recovery systems at kraft mills; pulping systems at mechanical, secondary fiber, and non-wood fiber pulping mills; and papermaking systems. With regard to wood yard operations, tall oil recovery systems, and pulping systems at mechanical, secondary fiber, and non-wood fiber pulping mills, EPA has determined that these sources do not emit significant quantities of HAPs and EPA is not aware of any reasonable technologies for controlling HAPs from these sources. For papermaking systems, EPA has not identified any reasonable control technology, other than the clean condensate alternative, that can reduce HAP emissions attributable to HAPs present in the pulp arriving from the pulping and bleaching systems. Additionally, EPA has determined that the use of papermaking systems additives and solvents do not result in significant emissions of HAPs (Air Docket A–92–40, IV–B–27). Therefore, based on the applicability requirements of section 112(g) [40 CFR 63 part B, 63.40(b)], the following sources would not be required to undergo section 112(g) review: wood yard operations; pulping systems at mechanical, secondary fiber, and non-wood fiber mills; tall oil recovery systems; and papermaking systems.

2. Named Stream Approach

At proposal, the rule proposed applicability cutoff values (i.e., volumetric flow rate and mass flow rate) as a way to distinguish the vent and condensate streams that would be required to meet the rule. Since proposal, the pulp and paper industry submitted additional data that allowed EPA to better characterize the vent and condensate streams that should be controlled.

In the final rule, the applicability cutoffs contained in the proposed rule have been replaced in favor of specifically naming process equipment and condensate streams that would be required to meet the rule, with the exception of decker, knotter, and screen systems at existing sources. For these systems, the additional industry data was used to determine applicability cutoffs in the form of HAP emission limits (for knotter and screen systems) and HAP concentration limits in process water (for decker systems) to identify the systems that should be controlled at existing sources. A description of the vent and condensate streams to be controlled is presented in sections II.B.2, VI.A.3.a, and VI.A.4–7. The Agency added language in the definitions for the named systems to make the definitions applicable to equipment that serves a similar function as those specifically listed. This addition was made because there are no standard names for process equipment. The EPA's intent was to include the equipment that function the same as the equipment specifically named in the definitions, even though the mill may use a different name for that piece of equipment.

The different approach used in the final rule does not significantly change the number of emission points controlled from those intended to be controlled in the proposed rule. The emission points and condensate streams that are being controlled in the final rule are fundamentally the same emission sources that EPA intended to be controlled in the proposed rule. EPA

concluded that the revised approach is easier and less costly to implement, for both the affected industry and the enforcement officials, since extensive emission source testing is not required to identify the vent and condensate streams to be controlled.

3. Kraft Pulping Standards

a. Applicability for Existing Kraft Sources. In the December 17, 1993 proposal, all pulping system equipment, with some exceptions, would have been required to be controlled. The exceptions were for deckers and screens at existing sources and small vents below specified volumetric mass flow rates and mass loadings. EPA proposed to require that treatment of all pulping wastewater streams except those with HAP concentrations below 500 ppmw and flow rates below 1.0 liter per minute.

In the March 8, 1996 supplemental notice, the Agency presented potential changes to the kraft mill standards. These changes included specifically naming equipment systems and pulping wastewater subject to the standards. For existing sources, the named equipment systems in the supplemental notice included: the LVHC system, pulp washing system, oxygen delignification system, the pre-washer knotter and screening system, and weak liquor storage tanks. The subject wastewater streams are the pulping process condensates from the digester, evaporator, turpentine recovery, LVHC collection, and the HVLC collection systems. EPA identified these systems and condensates to be controlled based on information presented in responses to industry surveys available prior to proposal and on updates and clarifications to survey responses submitted by the pulp and paper industry after proposal. At proposal, EPA did not have sufficient information to define these equipment systems.

At proposal, the Agency solicited comments on its determination of the control technology basis for the MACT floor and for MACT. The proposed MACT floor level of control at existing kraft sources was 98 percent reduction of emissions from the LVHC system, pulp washing system, and oxygen delignification system. In considering information received after proposal, the Agency continued to have questions, which were discussed with representatives of the pulp and paper industry, on the data provided in the survey responses on weak liquor storage tanks, the knotter and screening system, and the decker system at existing sources (Air Docket A–92–40, IV–D1–101). In the March 8, 1996 notice, the Agency requested further information on whether to distinguish between types or ages of weak liquor storage tanks, methods and costs of controlling them, and the level of control that represents the MACT floor for the different tanks. The Agency also requested data on the type of controls present on knotter and screening systems.

Commenters to the March 8 notice provided additional information on the kraft mills which control vents from knotter system, screen systems, decker systems, weak liquor storage tanks, and oxygen delignification systems. The commenters noted that many of the mills surveyed originally had misinterpreted survey questions for these systems. The commenters concluded that the revised information indicated that less than 6 percent of the knotter and screen systems, decker systems, and weak liquor storage tanks were actually controlled; they concluded, therefore, that the existing source floor for these vents is no control. Additionally, the commenters asserted that it would not be cost-effective to go beyond the floor to control weak liquor storage tanks because tanks at existing sources would not have the structural integrity to withstand a vacuum on them caused by the vent collection system. The commenters asserted that, to control emissions, these tanks would either need to be replaced or be retrofitted with expensive add-on controls that would not be cost-effective. One commenter supported using age as a means to indicate structural integrity and, therefore, rule applicability for weak liquor storage tanks. Several commenters disagreed that age was an appropriate indicator.

The Agency has evaluated the information submitted by the commenters on the control level for the knotter system, screen system, decker system, and weak liquor storage tanks. Information submitted by the commenters indicated that of the 597 weak liquor storage tanks in the survey only 28 (4.7 percent) actually had emissions routed to a control device (Air Docket A–92–40, IV–D1–106). Some respondents had previously included other types of controlled tanks, such as washer filtrate tanks, in their totals because EPA's original survey did not provide a definition of weak liquor storage tanks. The Agency, therefore, has concluded that the MACT floor level of control for weak liquor storage tanks at existing sources is no control. While some tanks are controlled, available information does not support the supposition that age is a good parameter for distinguishing structural integrity. In addition, the Agency evaluated the cost of going beyond the floor to control weak liquor tanks. The results of EPA's analysis indicated that a significant cost would be incurred for a limited emission reduction. This analysis is presented in Chapter 20 of the background information document for the promulgated NESHAP. Therefore, the Agency agrees with the commenters that control beyond the floor is not justified. Weak liquor tanks at new sources are required to be controlled.

The Agency disagrees with the comments that decker systems are not controlled at the floor at existing sources. Information supplied by the pulp and paper industry indicates there are 170 decker systems in mills responding to EPA's industry survey questionnaires. All the decker systems are associated with bleached mills. Of the 170 decker systems, 14 are controlled (8 percent) (Air Docket A–92–40, IV–B–16).

The majority of decker systems controlled at the floor (10 systems) are associated with oxygen delignification systems or are being used as an additional stage of pulp washing. The Agency believes that these types of decker systems are operated similarly to and have similar emissions as pulp washers. Decker systems used in this manner receive contaminated condensates or filtrates that may be recycled from other processes, such as the oxygen delignification system or combined condensate tanks. The process water may have a HAP concentration that would release significant amounts of HAP to the air from the air-water interface. The Agency characterized the emissions from this source to identify the types of decker systems with high emissions. Information supplied in NCASI technical bulletin 678 provided a relationship between air emissions and methanol concentrations in process water used in rotary vacuum drums. EPA evaluated this relationship and determined that decker controls and higher HAP emission rates were associated with deckers that used process water with HAP concentrations greater than or equal to 400 ppmw, or that did not use fresh water or ''whitewater'' from papermaking systems (Air Docket A–92–40, IV–B–22).

Therefore, the Agency has determined that it is appropriate to make a distinction among types of decker systems at existing sources for the purpose of setting the MACT standard. Decker systems at existing sources using fresh water or ''whitewater'' from papermaking systems, or using process

water with HAP concentrations less than 400 ppmw, are not required to be controlled. Decker systems at new sources are required to be controlled regardless of the HAP concentration in the process water introduced into the decker.

EPA has reviewed available data on knotter and screen systems and has concluded that these systems are controlled sufficiently to establish a MACT floor level of control, and also that control more stringent than the floor is not warranted. Data used to reach this conclusion include survey responses from the 1992 voluntary survey, follow-up telephone surveys conducted by the National Council of the Paper Industry for Air and Stream Improvement (NCASI), and emissions data from the NCASI 16-mill study. Although the data indicate that many of these systems are currently controlled to some degree, the survey responses were not detailed enough in their equipment system descriptions and the test data were too limited for the Agency to use these two sources of information alone to develop the MACT control requirements. Because these equipment systems, nomenclature, and control configurations vary across the industry, the Agency decided that a HAP emissions limit would be the best way for mills to determine which systems would require control. EPA lacks sufficient data, however, to pinpoint any single value that represents the MACT floor. Rather, based on the survey and test data, there are a range of values from which EPA could choose. EPA further considered the costs of control in choosing from this zone of reasonable values.

Of the 171 knotter systems reported in the 1992 voluntary survey, 12 knotter systems at 5 mills were reported as controlled and ducted into the noncondensible gas (NCG) collection system and another 49 knotter systems at 23 mills were reported as having no vents. NCASI followed up by telephone surveys with these 28 mills (Air Docket A–92–40, IV–D1–101, IV–D1–112, IV–D1–114). The follow-up surveys indicated a fair amount of misreporting at these 28 mills. NCASI did not resurvey for all 171 knotter systems. Therefore, the following knotter system floor determination assumes that the mills not resurveyed that originally reported no knotter system controls did not control any vents.

From the 28 mills resurveyed, it was determined that six knotter systems or 3.6 percent (6/171) route all vents into the NCG collection system; another two knotter systems or 1.2 percent (2/171) route all knotter hood vents into the NCG collection system; another eight knotter systems or 4.7 percent (8/171) use only pressure knotters; and another two knotter systems or 1.2 percent (2/171) route all vents to the smelt dissolving tank scrubber. Industry collected data at seven pressure/open (also referred to as pressure/vibrating) knotter systems and found the methanol emissions to range from 0.005–0.07 kilograms per megagram of oven-dried pulp (ODP) produced, and collected data at one pressure knotter system and found the methanol emissions to be 0.0042 kilograms per megagram ODP produced. Emissions data are summarized in the Chemical Pulping Emission Factor Development Document (Air Docket A–92–40, IV–A–8). Because the pressure knotter system emissions were lower than the emissions at the pressure/open systems, pressure systems can be considered a type of controlled system. Therefore, 18 or 10.5 percent (6+2+8+2 = 18/171) of the knotter systems have some level of emissions control. The Agency believes that this estimate of the number of knotter systems controlled may be somewhat low because it is uncertain how many of the mills not resurveyed may have had the lower emitting pressure systems.

The 1992 voluntary MACT survey responses indicated that 96 screening systems out of the 199 reported are not vented. NCASI resurveyed by telephone 41 of these 96 mills. Assuming that the 55 mills not resurveyed look similar to the 41, the follow-up survey determined that seven percent ($6/41 \times 96/199$) route their vents to the NCG collection system and 41 percent ($35/41 \times 96/199$) have closed screens that vent through auxiliary tanks. Therefore, 48 percent of the screening systems have some level of control.

Industry collected data at one closed screen system and one open screen system. The closed screen system tested had methanol emissions of 0.004 kilograms per megagram of ODP produced. The open screen system tested had methanol emissions of 0.22 kilograms per megagram of ODP produced.

The Agency considered how best to characterize the average emissions limitation achieved by the best controlled 12 percent of the knotter systems and screen systems given the wide variety of control scenarios present in the industry. Either collecting and controlling vents on an open system or using closed equipment results in lower air emissions. The Agency decided to select the emissions limitation using the test data from the closed and open equipment systems. The Agency's decision is due in part to the fact that the technology basis for the effluent limitations guidelines and standards being promulgated in these Cluster Rules at 40 CFR Part 430 for bleached papergrade kraft and soda mills include closing the screening areas and returning wastewater to the recovery system. Thus, it is likely that many mills will move toward wider use of the lower air emitting pressure systems.

Because there is only one test data point for the pressure knotter systems and that emissions value is similar to the low end of the range of data points for the pressure/open knotter systems, the Agency did not believe it would be appropriate to set the emission limit equal to the one pressure knotter system. Similarly, because there is only one test data point for closed screens, the Agency did not believe it would be appropriate to use that single data point to set the emission limit for screening systems. The Agency could have selected any emission limit within the range of all available data for knotters (i.e., 0.0042 to 0.07 kilograms per megagram of ODP produced) and screens (i.e., 0.004 to 0.22 kilograms per megagram of ODP produced). However, recognizing the limited data available, the Agency also considered the cost effectiveness of controlling these systems to aid in setting the emission limits within the range of reasonable values (Air Docket A–92–40, IV–B–21).

Based on considering all available data, the final rule requires that existing kraft sources are required to control knotter systems with total mass emission rates greater than or equal to 0.05 kilograms of HAP per megagram ODP produced. Existing kraft sources are required to control screening systems with total mass emission rates greater than or equal to 0.10 kilograms of HAP per megagram ODP produced. Since it is often difficult to distinguish between the knotter system and screening system at mills, a mill may also choose to meet a total mass emissions limit of 0.15 kilograms of HAP per megagram ODP produced across the knotting and screening combined system. New sources are required to control all knotter and screen systems, regardless of emissions level.

b. Compliance Times for Kraft Mills. In the March 8, 1996 supplemental notice, the Agency discussed that it was considering allowing kraft mills an extended compliance time of five additional years (eight years total) for pulp washing and oxygen delignification systems (61 FR at 9394–95). The notice discussed how the additional time would encourage the

maximum degree of overall multi-media pollution reduction and, in particular, would avoid discouraging mills from installing oxygen delignification equipment to reduce water pollution. The notice recognized the time constraints mills would face in trying to comply with both air and water rules essentially at the same time and that too short a compliance time could preclude mills from considering pollution prevention techniques with considerable environmental benefits, such as oxygen delignification and low-flow washers. These technologies reduce the amount of pollutants discharged into the wastewater. The March 8, 1996 notice also solicited comment on whether this compliance extension should be extended only to mills that commit to install these technologies (if EPA were to decide not to include that equipment as part of its BAT model technology).

Commenters supported the extension of compliance time for pulp washing and oxygen delignification systems at existing sources. Several commenters also requested that the compliance time be extended for weak liquor tanks, knotter and screening systems, and other HVLC vent streams because emissions from these sources will be transported and controlled by the same HVLC collection and incineration system as the pulp washing and oxygen delignification systems. The commenters noted that extension of the compliance period for all HVLC sources also allows for proper consideration of the full range of emerging innovative water and air pollution control options. Comments were not received on whether to provide the compliance extension only to mills that elect to install more stringent control technologies than necessary to comply with the baseline BAT requirements.

The Agency reviewed the comments and agrees that vents included in the HVLC system should be allowed a similar compliance time as the pulp washing and oxygen delignification systems. The majority of emissions and vent gas flow from equipment associated with the HVLC vent streams occur from the pulp washing system and the oxygen delignification system. Therefore, the design of the HVLC collection and transport system would be significantly influenced by these two systems. The Agency determined if different compliance times were provided for the components of the HVLC system, an affected source would expend significant amounts of capital to control systems required to comply in the three-year time frame. The source would have to re-design the gas transport and control devices five years later to accommodate controlling the washing system and oxygen delignification system. This entire cost could discourage the implementation of low-flow washing systems and oxygen delignification.

This would serve as an obvious disincentive to installation of advanced wastewater treatment technology since mills would be understandably reluctant to replace a newly installed air pollution control system. Therefore, EPA concluded that additional compliance time is appropriate and necessary for the remaining equipment controlled by the HVLC collection and transport system as well as the pulp washing system and the oxygen delignification system. See generally 61 FR at 9394–95. The final rule thus allows affected sources to control all the equipment in the HVLC system at kraft pulping systems at the same time, not later than April 17, 2006. A mill that installs an oxygen delignification system at an existing source after April 17, 2006 must comply with the NESHAP upon commencing operation of that system.

Regarding EPA's solicitation of comments on providing a compliance extension to all kraft mills, no negative comments were received. Therefore, EPA has decided to extend the compliance time for all kraft mills.

The final rule includes requirements for kraft mills to submit a non-binding control strategy report along with the initial notification required by the part 63 General Provisions. The purpose of the control strategy report is to provide the Agency and the permitting authority with the status of progress towards compliance with the MACT standards. The control strategy report must contain, among other information, a description of the emission controls or process modifications selected for compliance with the control requirements and a compliance schedule. The information in the control strategy report must be revised or updated every two years until the mill is in compliance with the standards.

c. Condensate Segregation. The proposed standards for process wastewater would have required that all pulping wastewaters that met the mass emission rate and flow rate applicability criteria had to be treated to achieve the specified control options. Comments and data submitted to EPA indicated that kraft mills typically steam stripped the condensates from the digester, turpentine recovery, LVHC, and HVLC systems, and certain evaporator condensates. The data also indicated that mills that use steam strippers also practiced varying degrees of condensate segregation in order to minimize the flow rate and maximize the HAP mass in condensate streams sent to treatment.

In the March 8, 1996 **Federal Register** supplemental notice, EPA presented a discussion of condensate segregation and included definitions for condensate segregation and a segregated condensate stream. Commenters on the March 8 notice supported the definitions for condensate segregation and segregated condensate stream. Commenters also submitted additional information suggesting definitions for condensate segregation and segregated condensate stream as well as options for demonstrating compliance with the condensate segregation requirements. EPA evaluated the information and included some of the concepts in the final rule.

The final rule states that the condensates from pulping process equipment at kraft mills must be treated and allows a number of alternative methods of complying with the standards, all of which represent MACT. The final rule also states that the entire volume of condensate generated from the named pulping process equipment at kraft mills must be treated unless the volume from the digester, turpentine recovery, and weak liquor feed stages in the evaporator systems can be reduced using condensate segregation. If adequate segregation (as specified in the rule) is performed, only the high-HAP fraction streams from the digester system, turpentine recovery system, and the weak liquor feed stages in the evaporator system and the non-segregated streams from the LVHC and HVLC collection systems must be sent to treatment.

Discussions with the pulp and paper industry after the March 8, 1996 supplemental notice indicated that some mills might not be able to achieve the proposed 65 percent mass isolation with their existing equipment even though they are achieving high levels of HAP removal in the steam stripper system (Air Docket A–92–40, IV–E–84). Therefore, the final rule contains two options for demonstrating compliance with the segregation requirements. The first option is to isolate at least 65 percent of the HAP mass in the total of all condensates from the digester system, turpentine recovery system, and the weak liquor feed stages in the evaporator system (condensate streams from the LVHC and HVLC collection systems are not segregated). The second option requires that a minimum total HAP mass from the high HAP concentrated condensates from the digester system, turpentine recovery

system, and the weak liquor feed stages in the evaporator system and the total LVHC and HVLC collection system condensates be sent to treatment. The second option was included in the final rule because it achieves the same objective by sending a large enough mass to treatment to meet the floor-level control requirements.

For a detailed explanation of the concept of condensate segregation readers are referred to the docket (Air Docket A–92–40, IV–D1–107).

d. Clean Condensate Alternative. The proposed rule did not contain any provisions for emissions averaging. Industry comments on the proposal indicated support for incorporating an emission averaging approach in the final rule. After the public comment period, the pulp and paper industry submitted a comparison between an option developed by industry and the proposed MACT standards. The option formed the basis for the clean condensate alternative (CCA) in the final rule. The CCA focuses on reducing HAP emissions throughout the mill by reducing the HAP mass in process water streams that are recycled to various process areas in the mill. By lowering the HAP mass loading in the recycled streams, less HAP will be volatilized to the atmosphere.

The March 8, 1996 **Federal Register** supplemental notice presented a discussion of the industry's alternative (referred to as the ''clean water alternative'' in the notice). In the March 8 notice, EPA indicated that while the industry's concept was innovative, additional information would need to be submitted to the Agency to make the concept a viable compliance option, such as specific design parameters and data supporting the relationship between condensate stream HAP concentrations and HAP emissions from process equipment receiving the condensates.

Design specifications for the CCA were not available since no mills to date have implemented such a technology. However, the test data collected by the pulp and paper industry following the December 17, 1993 proposal included data on vent emissions and process water HAP concentrations that were used by industry to develop equations showing the relationship between HAP emissions from specific process equipment (e.g., pulp washers) and the HAP concentrations present in the process water sent to the equipment.

EPA evaluated these data and concluded that sufficient relationship appears to exist between HAP concentrations in recycled process wastewater and HAP emissions from process equipment, such that the CCA has the potential to achieve or exceed the requirements of the final standards. However, EPA has determined that the correlation equations developed by industry, because they were derived from small data sets, would not be sufficient for demonstrating compliance or equivalency with the final standards at a specific mill. Variability at a specific mill, such as types of process equipment, operating practices, process water recycle practices, and even type of wood pulped, can strongly influence the relationship between concentration in the process water and the process emissions.

The final rule contains provisions for using the CCA as a compliance option to the kraft pulping standards for the subject equipment in the HVLC system. An owner or operator must demonstrate to the Administrator's satisfaction that the total HAP emissions reductions achieved using the CCA are equal to or greater than the total HAP emission reductions that would have been achieved by compliance with the kraft pulping system standards for equipment in the HVLC system. The baseline HAP emissions for each equipment system and the total of all equipment systems in the CCA affected source (which is the existing MACT affected source expanded to include the causticizing and papermaking systems) must be determined after compliance with the pulping process condensate standards; after consideration of the effects of the effluent limitations guidelines and standards in 40 CFR part 430, subpart B; and after all other applicable requirements of local, State, and Federal agencies or statutes have been implemented. While engineering assessments or test data may be used to determine the feasibility of using the CCA, only test data may be used to demonstrate compliance with the kraft pulping system standards using the CCA.

e. Biological Treatment. At proposal, owners or operators using a biological treatment system to comply with the MACT requirements for pulping wastewater would have been required to measure the HAP or methanol concentration in the influent and effluent across the unit every 30 days and to identify appropriate parameters to be monitored to ensure continuous compliance. The proposed standards would have required that during the initial performance test, mills collect samples and analyze them using Method 304 to calculate a site-specific biorate constant. That constant, along with the operating parameters associated with the biological treatment system were to be entered into the WATER7 (updated to WATER8 since proposal) emissions model to demonstrate that the biological treatment system could achieve the treatment level required by the standards. Those operating parameters measured during the initial performance test were then to be monitored continuously to demonstrate compliance.

EPA acknowledged at proposal that industry was collecting information on the performance of biological treatment systems and monitoring techniques. EPA also noted that the industry was investigating the possibility of monitoring inlet and outlet soluble biochemical oxygen demand (BOD_5). EPA requested comments on applicable monitoring parameters for biological treatment systems and supporting data on biorates and corresponding parameters for monitoring.

EPA received a number of comments on testing and monitoring requirements for biological treatment systems. The industry submitted studies on biological treatment systems and on monitoring soluble BOD_5. Discussions were also held with the industry representatives on this issue.

In general, commenters objected to the proposed requirements to use Method 304 to calculate the site-specific biorate constants. Commenters felt that the laboratory-scale simulation of the biological treatment unit, which is basically what Method 304 requires, does not accurately reflect the biological degradation rates of the full-scale system. Commenters also stated that according to data collected, performance testing to demonstrate that biological treatment systems can meet the standards does not appear to be warranted given that methanol is highly biodegradable. Commenters further requested that if they had to conduct a performance test, they should also be permitted to use the inlet and outlet concentration procedures for calculating a site-specific biological degradation rate (biorate) constant as set forth in Appendix C of the Hazardous Organic NESHAP (HON). See 59 FR 19402 (April 22, 1994). Commenters also objected to having to demonstrate continuous compliance with the operating parameters, pointing out that a parameter could be exceeded and the biological treatment system could still be meeting the standards.

Following proposal, industry also submitted data on soluble BOD_5 across biological treatment system units. Industry stated that their data indicated that as long as the biological treatment system was achieving at least 80 percent

removal of soluble BOD_5, the biological treatment system was operating properly and that the unit would be meeting the standards. However, industry argued that soluble BOD_5 removal should not be a continuous monitoring parameter that if exceeded, would indicate a violation of the standards. Rather, a mill should be allowed to start measuring methanol removal across the system to verify compliance.

The Agency considered the comments and data received and agrees that the provisions in Appendix C of the HON are an acceptable alternative to Method 304 for calculating site-specific biorate constants. However, EPA disagrees with the commenters on the issue of the need to conduct performance testing. While EPA agrees that methanol degrades more rapidly than many compounds, there are other HAPs present in the condensate streams subject to the standards, and biological treatment systems can vary widely in their operation and performance, depending on their design, maintenance, and even their geographical location. As such, the final regulation retains the proposed requirements for performance testing.

EPA also became concerned that allowing the use of methanol as a surrogate for total HAP may not be appropriate for this particular treatment technology. Because methanol is one of the most difficult HAPs to remove with a steam stripper (the technology on which the standards are based), even greater removals of total HAP would occur when a steam stripper is used. Thus, methanol is a reasonable surrogate under such conditions. The opposite is true for biological treatment systems, where methanol is one of the easier HAPs to degrade. As such, the final regulation specifies that a total HAP removal (not just methanol) of 92 percent be achieved by biological treatment systems.

EPA agrees with the commenters that soluble BOD_5 is an appropriate monitoring parameter for biological treatment systems. However, EPA disagrees with the commenters on their position regarding the monitoring of soluble BOD_5 and operating parameters for demonstrating continuous compliance. After discussion with the industry on this issue, EPA has concluded that soluble BOD_5 and operating parameters are the most appropriate means available for monitoring to demonstrate continuous compliance (A–92–40, IV–E–87). EPA understands the concerns raised on this point, and as such the final regulation provides flexibility. The regulation allows mills to establish, through performance testing, their own range of treatment system outlet soluble BOD_5 and operating parameter values to monitor. The final rule also allows owners and operators to demonstrate compliance with the standard using the WATER8 model and inlet and outlet samples from each biological treatment system unit when the specified monitoring parameters are outside of the range established during the initial performance test.

4. Sulfite Standards—Emission Limits for Sulfite Pulping Processes

In the March 8, 1996 supplemental notice (61 FR 9383), the Agency presented potential changes to the proposed standards for sulfite pulping processes. EPA had proposed that all pulping equipment at kraft, sulfite, soda, and semi-chemical processes must be enclosed and routed to a control device achieving 98 percent reduction in emissions. In the March 8 notice, the Agency proposed that the MACT floor level of control at existing sulfite processes was control of vents from the digester system, evaporator system, and pulp washing system. The MACT floor level of control at new sulfite processes would be control of the equipment systems listed for existing sources, plus weak liquor tanks, strong liquor storage tanks, and acid condensate storage tanks. In the March 8 notice, the Agency discussed in detail its preliminary determination that the sulfite standards should instead apply to the total emissions from specific named vents and to any wastewater emissions associated with air pollution control devices used to comply with the rule. For calcium-based sulfite pulping processes, the new proposed emission limit was 0.65 lb methanol/ODTP and the percent reduction was 92 percent. For ammonium-and magnesium-based sulfite pulping processes, the new proposed emission limit was 1.10 lb methanol/ODTP, and the percent HAP reduction was 87 percent. The Agency developed applicability cutoffs based on methanol because only methanol emissions data were obtained for all of the equipment systems and wastewater streams considered for control at sulfite mills. The test data from sulfite mills also indicated that for the equipment systems tested for other HAPs, methanol comprised the majority of HAP emissions. Therefore, the Agency believes that the maximum control of HAP emissions will be achieved by controlling methanol as a surrogate.

Several commenters objected that the proposed emission limits were not appropriate because they were based on data that only indicated possible levels of methanol emissions and not a rigorous assessment of emission rates. The commenters contended that the proposed emission limits were derived from limited data which may not be representative of the range of mills in the industry; therefore, they argued, the limits did not account for variability in emissions and are not achievable. The commenters provided the Agency with emissions test data that illustrated fluctuations in the methanol mass emissions over an extended time period due to variations in products and process conditions.

The Agency evaluated the information provided by the commenters and subsequently agreed with the commenters regarding process variability at sulfite mills. The Agency determined the amount of variability associated with a 99.9 percent confidence level in the data supplied by the commenters (Air Docket A–92–40, IV–B–20). This amount of variability (confidence interval), therefore, was applied to the average emission limits from the best controlled mills to develop the final emission limit.

For ammonium- and magnesium-based sulfite pulping processes, the final emission limit is 1.1 kilograms of methanol per megagram of ODP produced. After the close of the March 8, 1996, **Federal Register** supplemental notice comment period, additional information was provided to the Agency that indicated that the sodium-based sulfite pulping process is in use at some mills (A–92–40, IV–E–94). No emissions information was available for this process. However, the Agency determined, that due to the similarities in processes between calcium- and sodium-based sulfite pulping processes, the same limit developed for calcium-based mills would be applicable to sodium-based mills. For calcium- and sodium-based sulfite pulping processes, the final emission limit is 0.44 kilograms of methanol per megagram of ODP produced. Because the variability is incorporated into the mass emission limit, these emission limits and corresponding monitoring parameters are never-to-be-exceeded values.

5. Soda and Semi-chemical Mill Standards

The proposed standards would have required the owners or operators of new or existing kraft, semi-chemical, soda, and sulfite mills to comply with the same emission standards. In the March 8, 1996 notice, EPA proposed to subcategorize the pulp and paper industry by pulping type and develop different MACT control requirements for soda and semi-chemical mills based

on emission characteristics. Existing soda and semi-chemical mills would be required to control the digester and evaporator systems (LVHC system). New soda and semi-chemical mills would be required to control the LVHC and the pulp washing systems. EPA solicited comments on this proposed change.

Information provided by the pulp and paper industry in survey responses and after proposal confirmed that the MACT floor level of control at existing semi-chemical mills is collection and control of the LVHC system. The Agency determined that it was not reasonable to control other emission points at existing semi-chemical mills (Air Docket A–92–40, IV–B–12). Data indicated that the best-controlled semi-chemical mills combust LVHC system emissions and emissions from pulp washing systems. Therefore, the final rule requires that existing semi-chemical mills control the LVHC system, and new semi-chemical mills control the LVHC and the pulp washing systems.

As discussed in the March 8, 1996 notice, the MACT floor level of control for soda mills is no control. The Agency has determined that HAP emissions from soda mills are similar to kraft mills (with the exception that TRS compounds are not emitted from the soda pulping process) and control of LVHC system vents is technically feasible and can be achieved at a reasonable cost. The Agency has also determined that controlling additional vents at existing sources cannot be achieved at a reasonable cost. However, controlling the pulp washing system at new soda mills can be achieved at a reasonable cost (Air Docket A–92–40, IV–B–12). Therefore, the final rule requires that existing soda mills control the LVHC system, and new soda mills control the LVHC and the pulp washing system.

6. Mechanical Pulping Mill, Secondary Fiber Pulping Mill, Non-wood Fiber Pulping Mill, and Papermaking System Standards

In the March 8, 1996 **Federal Register** notice, EPA proposed standards for pulping and bleaching processes at mechanical pulping mills, secondary fiber pulping mills, and non-wood fiber pulping mills. As discussed in the proposal, EPA believes that there are no air pollution control technologies in use on these processes except for those installed on bleaching systems using chlorine. The March 8 notice proposed no add-on controls for pulping systems (and the associated wastewater), papermaking systems, and nonchlorine bleaching systems for these mills. For traditional bleaching systems using chlorine, the proposed control was based on the performance of caustic scrubbers. The proposal stated that EPA would continue to investigate the use of HAP chemicals in papermaking, the magnitude of HAP emissions, and the viability of chemical substitution to reduce HAP emissions from papermaking systems.

Some commenters questioned EPA's proceeding with the rule in advance of the receipt of additional industry data that was being collected. The commenters cautioned that EPA did not have sufficient data on which to base a rule. Since the March 8, 1996 **Federal Register** proposal, EPA has received the results of the NCASI-sponsored testing program from these sources (A–92–40, IV–J–80 through IV–J–85). These data have been used in the determination of the final standards for these sources in today's rule. EPA has concluded that sufficient data have been collected to include these sources in today's action.

Commenters agreed with EPA's March 8, 1996 proposal for bleaching systems at these mills. Comments on the March 8 proposal supported the conclusion that caustic scrubbers are in use only on chlorine and chlorine dioxide bleaching systems. Furthermore, information available to EPA indicate that non-wood pulping mills typically use chlorine or chlorine dioxide bleaching systems. For chlorine and chlorine dioxide bleaching systems, EPA determined that scrubbers are used to control chlorinated compound emissions for process and worker safety reasons. Thus, the control achieved by this technology represents the floor for chlorine and chlorine dioxide bleaching systems at these mills and is the technological basis for the standard in today's rule. As stated in the December 17, 1993 proposal, EPA analyzed more stringent controls, such as combustion of bleaching vent gases after caustic scrubbing, for bleaching systems at kraft, soda, and sulfite mills. EPA has determined that these more stringent options are unreasonable considering cost and environmental impacts. Because of the operational similarities of the chlorine and chlorine dioxide bleaching systems at non-wood fiber mills to those at kraft, soda, and sulfite mills, EPA has concluded that combustion following caustic scrubbers is also not cost-effective at non-wood fiber mills. In addition, data available to EPA indicate that HAP emissions from chlorine bleaching systems at these mills are relatively low. In fact, the data show that the three largest non-wood pulping mills, of the ten currently in operation, use elemental chlorine in their bleaching systems and total HAP emissions from each of these three mills is less than five tons of total HAP per year (Air Docket A–95–31, IV–B–5).

For chlorine and chlorine dioxide bleaching systems at mechanical pulping mills, secondary fiber pulping mills, and non-wood pulping mills, today's rule requires the same level of control required for bleaching systems at kraft, soda, and sulfite mills. Those requirements are specified in § 63.445 (a)–(c) of today's rule. However, § 63.445 (d) and (e) do not apply to these mills since there are no effluent limitation guidelines for control of chloroform at mechanical, secondary fiber, and non-wood fiber pulping mills. Additional requirements for the control of chloroform emissions, based on the effluent limitation guidelines for best available technology economically achievable, are required in the standards for bleaching systems for kraft, soda, and sulfite mills. However, EPA is not aware of any controls presently in place or available for reducing chloroform air emissions at mechanical, secondary fiber, and non-wood pulping mills. Therefore, MACT is no control for chloroform air emissions from bleaching systems at mechanical, secondary fiber, and non-wood fiber pulping mills.

Since the March 8 proposal, EPA has also determined that while mechanical pulping, secondary fiber pulping, and other non-wood pulping mills do not typically use chlorine or chlorine dioxide bleaching, these mills may brighten the pulp stock through the use of hypochlorite and non-chlorine bleaching compounds. However, data available to EPA indicate that HAP emissions from these systems are relatively low, and that none of the bleaching systems that use hypochlorite and non-chlorine compounds have installed emission controls. Based on these findings, EPA established the MACT floor for bleaching systems at these mills that use hypochlorite and non-chlorine bleaching to be no control. EPA considered going beyond the floor and requiring HAP control through incineration of vent streams for these sources but determined that the minimal level of HAP emission reductions that would be achieved did not justify going beyond the floor (Air Docket A–95–31, IV–B–5).

In the March 8, 1996 **Federal Register** notice, EPA proposed no standards for papermaking systems. The three potential sources of HAP emissions from papermaking systems are HAPs contained in the pulp stock, HAPs contained in the whitewater, and HAPs from additives and solvents. Information available to EPA indicated no papermaking systems are operating with HAP controls; thus the floor level

of control for papermaking systems is no control. EPA evaluated two possible control options for papermaking systems: (1) Removal of HAPs from the pulp stock and whitewater before the papermaking system; and (2) control of papermaking system vent streams. Analysis of these control options showed that there are no demonstrated methods for removing HAPs from the pulp stock or whitewater and that applying HAP control to the vent streams of papermaking systems is not cost-effective (Air Docket A–95–31, IV–B–8). Therefore, EPA is not requiring HAP control beyond the floor.

In the March 8, 1996 notice, EPA indicated that it was investigating the use of HAP-containing additives in papermaking systems, the magnitude of HAP emissions resulting from the use of papermaking system additives, and the viability of a MACT standard based on additive substitution. EPA has concluded that based on emission test reports and a survey conducted on additive use, additives do not contribute significantly to HAP emissions (Air Docket A–95–31, Item IV–B–6). The amount of HAPs contained in additives used by the paper industry for papermaking systems is relatively low, an estimated 236 tpy in 1995. Furthermore, less than 20 percent of HAPs contained in the additives is emitted to the air. About 80 percent of the HAPs remain on the paper or in the whitewater. Consequently, total annual HAP emissions attributable to additives are an estimated 50 tons per year, industry-wide. In comparison to the baseline emission level of 210,000 tons per year of total HAPs from the entire pulp and paper industry, the contribution of HAPs from papermaking system additives is negligible (Air Docket A–95–31, IV–B–6).

In a meeting between EPA and several representatives of the Chemical Manufacturers Association (CMA), CMA stated that members have been working to reduce HAP and solvent use in papermaking system additives over the past 15 years, even in the absence of regulations. Reductions have been achieved and CMA expects these efforts to continue. CMA noted that HAP-free alternatives may not be possible for all types of additives, as some HAPs are critical to product performance. EPA believes that low-HAP additive substitution is product-specific and it is not clear from the available information that substitution options are technically feasible (Air Docket A–95–31, IV–E–5). Therefore, EPA has concluded that a MACT standard for papermaking systems based on low-HAP additive substitution is not warranted.

In the March 8, 1996 notice, EPA proposed no standards for pulping systems at mechanical, secondary fiber, or non-wood fiber pulping mills. Information available to EPA indicated that no pulping systems at these mills are operating with HAP controls. Therefore, EPA has concluded that the floor for pulping systems at these mills is no control. EPA evaluated the feasibility of going beyond the floor and requiring HAP controls for these sources. Specifically, EPA investigated the feasibility of routing vent streams from these pulping systems to a combustion device for HAP control. EPA determined that the cost of combusting the vent streams was not justified by the HAP emission reductions achieved, and that requiring HAP control beyond the floor was not justified. Furthermore, pulping chemical usage, which correlates with HAP emission levels at kraft, semi-chemical, soda, and sulfite pulping mills, is much lower at non-wood fiber and secondary fiber pulping mills and minimal at mechanical pulping mills; thus the potential for HAP emissions is lower (Air Docket A–95–31, IV–B–7).

7. Bleaching System Standards

In the proposed rule, bleaching systems would have been required to control all HAP emissions by 99 percent using a caustic scrubber. In the March 8, 1996 supplemental notice, the Agency revised the proposal for the bleaching system requirements based on information and comments received after proposal. The new data indicated that caustic scrubbing reduces emissions of chlorinated HAP compounds (except chloroform), but does not control non-chlorinated HAP emissions. The Agency determined that no other option was feasible to control non-chlorinated HAPs. EPA has determined that reduction of chloroform emissions through the use of additional, add-on air pollution control technology is cost prohibitive. The only feasible option for controlling chloroform emissions is process modification, such as chlorine dioxide substitution and elimination of hypochlorite use.

In the March 8 notice, the Agency proposed to require chlorinated HAP emissions other than chloroform to be controlled by 99 percent (with chlorine as a surrogate for chlorinated HAP) based on the performance of a caustic scrubber. As an alternative to the percent reduction standard, the Agency also proposed an emission limit of 10 ppmv chlorinated HAP at the caustic scrubber outlet (with chlorine as a surrogate for chlorinated HAP). The Agency also solicited comments on providing a mass emission limit alternative to the percent reduction and the outlet concentration standards.

Commenters on the March 8, 1996 notice supported the changes to the scrubber requirements in the proposed rule. Commenters also expressed concern that bleaching systems with new low-flow vent systems would not be able to meet either the percent reduction or the outlet concentration standards. Therefore, they asserted, these standards would discourage the use of new low-flow bleaching vent technologies. Based on this concern, one commenter advocated a chlorinated HAP mass emission limit for bleaching systems of 0.023 lb of chlorinated HAP (excluding chloroform) per ODTP produced. The commenter claimed that a mass emission limit would not penalize new low-flow bleaching vent systems.

Based on available data, the Agency has concluded that low-flow bleaching vent systems can achieve the 99 percent reduction and the 10 ppmv outlet concentration requirements for total chlorinated HAP (other than chloroform). Based on a review of the information provided by the commenter and the available data on bleaching system emissions, the Agency has concluded that the commenter's recommended mass emission limit of 0.023 lb of chlorinated HAP (excluding chloroform) per ODTP produced is too high. The Agency evaluated the available data used to develop the percent reduction and outlet concentration requirements for bleaching systems (A–92–40, II–I–24). From this evaluation, the Agency determined that a scrubber outlet mass emission rate of 0.001 kg of total chlorinated HAP (other than chloroform) per Mg ODP produced (0.002 lb/ODTP) would provide reductions equivalent to 99 percent reduction standard (A–92–40, IV–B–29). The mass emission limit of 0.001 kg of chlorinated HAP (other than chloroform) per Mg ODP produced represents a mass emission limit achievable by all units that also achieved 99 percent reduction of chlorine. Furthermore, the available data show that some of the scrubbers achieving the 99 percent chlorine reduction standard, and the 10 ppmv outlet concentration limit, were also operating on low-flow bleaching vent systems.

For the final rule, the Agency has provided a mass emission limit option for bleaching systems of 0.001 kg of chlorinated HAP (excluding chloroform) per Mg ODP produced (0.002 lb/ODTP). The Agency maintains that this option

allows more flexibility for sources affected by this rule, does not penalize bleaching systems operating with low-flow technology, and will provide reductions in chlorinated HAP emissions (other than chloroform) equivalent to the 99 percent reduction standard. Therefore, the final rule allows sources to comply with the bleaching system requirements if they achieve an scrubber outlet mass emission limit at or below 0.001 kg of total chlorinated HAP (other than chloroform) per Mg ODP produced. Chlorine may be used as a surrogate for measuring total chlorinated HAP.

After proposal, the Agency also evaluated the effect of process modifications on chloroform emissions. The results of this analysis indicated that the technology basis for MACT control of chloroform is complete chlorine dioxide substitution and elimination of hypochlorite as a bleaching agent. These process modifications were determined to reduce chloroform emissions significantly. At the same time, EPA was proposing complete chlorine dioxide substitution and hypochlorite elimination as the technology bases for the effluent limitations guidelines and standards under Subparts B and E (see 58 FR at 66109–11, 14–15). Since the control technologies that would be installed to comply with effluent limitations guidelines and standards and MACT would likely be the same for these bleached papergrade mills, EPA therefore proposed in the March 8 notice that chloroform air emissions at bleached papergrade mills be controlled by complying with the effluent limitations guidelines and standards applicable to those mills. No adverse comments were received on this proposal.

In the March 8, 1996 notice, the Agency solicited comments on whether an alternative numerical air emission limit for chloroform (i.e., besides complying with the effluent limitations guidelines and standards) was needed. Some commenters contended that a numerical air emissions limit for chloroform would be unnecessary because the effluent limitations guidelines and standards would achieve the requisite reductions. The Agency did not receive any indication of any benefit from a numerical air emission limit for chloroform. Additionally, the Agency did not have sufficient data and did not receive any further data after the March 8 notice to develop a numerical air emission limit (and hence is finding that a numerical standard is not feasible for purposes of CAA § 112(h)). Therefore, the final rule does not include a numerical air emission limit for chloroform (see the proposal at 58 FR 66142 for a discussion on setting MACT standards in a format other than an emission standard). The Agency is, however, providing an alternative compliance mechanism in the form of a work practice standard of complete substitution of chlorine dioxide for elemental chlorine and complete hypochlorite elimination—the technical basis for BAT. (EPA also notes that although the Agency's technical judgment is that compliance with BAT also will result in control of air emissions to reflect the MACT level of control, the Agency will continue to investigate whether this proves correct as the rule is implemented.)

Because MACT for new sources is equivalent to MACT for existing sources, the new source MACT standards for bleaching systems require compliance with BAT/PSES requirements (or implementation of 100 percent substitution and elimination of hypochlorite). This requirement applies even if the mill or bleaching system also meets the definition of new source under the effluent guidelines limitations and standards, and thus is required to meet the more stringent new source effluent requirements of NSPS/PSNS. Although achievement of the NSPS/PSNS may result in installation of technologies that reduce effluent loading beyond what is achieved by 100 percent substitution and elimination of hypochlorite, EPA is not aware that these advanced technologies will provide air emission reductions beyond what the BAT/PSES requirements will achieve.

EPA notes that an affected bleached papergrade mill must comply with the existing source MACT requirements no later than April 16, 2001 even if the mill's existing Clean Water Act NPDES permit does not yet reflect the corresponding effluent limitations guidelines and standards because its existing terms have not expired or it has been administratively extended. Put another way, even if a mill's existing NPDES permit serves as a shield (until reissuance) against imposition of new limits based on new effluent limitations guidelines (see CWA Section 402(k)), the MACT requirement for bleached papergrade mills to control chloroform emissions through compliance with all parameter requirements in the effluent limitations guidelines and standards takes effect to satisfy the requirements of the Clean Air Act. Similarly, if a bleached papergrade mill's NPDES permit is reissued sooner than the expiration of the 3-year compliance schedule authorized for the chloroform MACT requirements and calls for immediate compliance with the BAT limitations, that deadline would prevail. The same principles will apply when effluent limitations guidelines and MACT standards are promulgated for dissolving grade mills. EPA's plans for promulgating MACT standards for these mills are discussed immediately below.

An additional issue relating to compliance dates concerns bleaching systems at existing source papergrade kraft and soda mills which have elected, under the Clean Water Act portion of this rule, to treat wastewater to levels surpassing baseline BAT requirements (such as adding oxygen delignification prior to bleaching, and in some cases, engaging in additional reduction of process wastewater and further reductions in chlorinated bleaching chemicals used and bleaching system modifications than are necessary to meet BAT baseline limitations). As an incentive to make this election, EPA is not requiring participating mills to achieve compliance with the more stringent portions of the ''Advanced Technology'' BAT limitations for six, eleven, and sixteen years (for Tiers I, II, and III, respectively) in order to afford these mills sufficient time to develop, finance, and install the Advanced Technologies. In light of this, the Agency is concerned that requiring bleached papergrade kraft and soda mills to comply in three years with MACT standards based on process substitution of chlorine dioxide for elemental chlorine would discourage these mills from electing to participate in the Advanced Technology program. This is largely because a mill that implements process substitution before it installs oxygen or other extended delignification systems is likely to construct more chlorine dioxide generating capacity than it ultimately will need. A mill thus compelled to invest first in process substitution may be very reluctant to abandon a portion of that investment soon afterwards in order to participate in the voluntary incentives program.

EPA also believes that requiring compliance in three years with a chloroform MACT standard based on baseline BAT for bleached papergrade kraft and soda mills would present similar disincentives to achieving greater effluent reductions. A mill in those circumstances will have made a substantially larger capital investment than it will need to control chloroform once its array of advanced water technologies is installed. Also, depending on the degree of process modifications the mill makes, the mill may need a much smaller scrubber for

the non-chloroform chlorinated HAPs and, in some cases, a scrubber may not be needed at all to meet the MACT standards for chlorinated HAP concentration limit. Thus, a mill otherwise interested in participating in the Voluntary Advanced Technology Incentives Program will find itself diverting capital to environmental controls that it ultimately will not need, instead of employing that capital to make more advanced process modifications that will benefit both the water and the air.

Under these unusual circumstances where imposition of MACT requirements could likely result in foregoing substantial cross-media environmental benefits, EPA believes that a two-stage MACT compliance scheme is justified for existing sources at bleached papergrade kraft and soda mills that enroll in the water Voluntary Advanced Technology Incentives Program (see 61 FR 9394 for a similar argument relating to compliance with MACT for washers and oxygen delignification systems). The first stage is an interim MACT of no backsliding—which reflects the current level of air emissions control. The second stage requires compliance with revised MACT based on baseline BAT requirements for all parameters for bleached papergrade kraft and soda mills. (The second stage in effect revises MACT to reflect the control technologies which will be available at this later date. See CAA § 112 (d)(6).) The no-backsliding provisions apply to the period from June 15, 1998 until compliance with the second-stage MACT standards is required April 15, 2004. This two-step alternative is available only to bleached papergrade kraft and soda mills actually making the binding decision to comply with Tier I, II, or III water limitations.

EPA believes that providing these mills six years to comply with second-stage MACT (i.e., baseline BAT requirements for all parameters) is an appropriate and logical outgrowth of the discussions set forth in the March 8, 1996 supplemental MACT notice (61 FR 9393) and the July 15, 1996 supplemental effluent guidelines notice (61 FR 36835–58). In the March 8 notice, EPA solicited comments on its preliminary findings that MACT for chloroform air emissions should be compliance with baseline BAT. Commenters agreed with this preliminary determination. In the July 15 notice, EPA set forth its vision of more stringent BAT for mills that voluntarily enter the Advanced Technologies Incentives program. As part of that voluntary program under the water standards, EPA is promulgating a requirement that mills in Tiers II and III, at a minimum, meet all the limitations promulgated as baseline BAT no later than April 15, 2004. See Section IX.A. Thus, more stringent air emission controls than stage one MACT will likewise be available at this time since compliance with these interim BAT limitations will result in compliance with MACT. For Tier II and Tier III mills, this means that the second stage MACT requirement is compliance with the baseline BAT limitations by April 15, 2004. The same is the case for Tier I mills, even though under the water regulation Tier I mills will be required to achieve more stringent limitations at that time. EPA is defining MACT to be the baseline BAT limitations even in this situation because compliance with the more stringent AOX limitations and other requirements unique to Tier I are unnecessary to control chloroform emissions at these mills.

EPA further believes that most plants likely to elect to comply with a tier option already control air emissions of chlorinated HAPs (both chloroform and other chlorinated HAPs) through application of the MACT technologies (process substitution for chloroform and caustic scrubbing for the remaining chlorinated HAPs). Thus, there will be some control of the emissions from these bleaching operations during the time preceding compliance with the second stage of MACT. To ensure that there is no lessening of existing controls, EPA also is promulgating a no backsliding requirement as an interim MACT—reflecting current control levels. During the extended compliance period, mills thus may not increase their application rates of chlorine or hypochlorite above the average rates determined for the three-month period prior to June 15, 1998.

In the March 8 notice, the Agency proposed making a distinction between requirements for bleaching systems at papergrade and dissolving grade mills. The Agency solicited data concerning chloroform emissions from dissolving grade bleaching processes and requested comment on an appropriate chloroform MACT for dissolving grade bleaching systems. Several commenters suggested that a separate MACT standard for chloroform be developed for bleaching systems at dissolving grade mills. Some commenters requested that the Agency defer chloroform control requirements for dissolving grade mills until effluent limitations guidelines and standards are established at those mills.

As stated in the July 15, 1996 **Federal Register** notice (61 FR 36835), EPA is evaluating new data on the technical feasibility of reducing hypochlorite usage and implementing high levels of chlorine dioxide substitution on a range of dissolving grade pulp products. Therefore, EPA is deferring issuing effluent limitations guidelines and standards for dissolving grade mills until the comments and data can be fully evaluated. EPA expects to promulgate final effluent limitations guidelines and standards for dissolving grade subcategories at a later date.

EPA has decided to delay establishing these MACT standards for chloroform and for other chlorinated HAPs for dissolving grade bleaching operations until promulgation of effluent limitations guidelines and standards for those operations, for the following reasons. With respect to the MACT standard for chloroform, first, as explained above and in the March 8 notice, the control technology basis for the effluent limitations guidelines and standards and the MACT requirements will be the same. Second, at present, the Agency is unsure what level of chlorine substitution and hypochlorite use is achievable for dissolving grade mills. Thus, although EPA has a reasonably good idea what the technology basis of MACT and effluent limitations guidelines and standards is likely to be for dissolving grade mills, the precise level of the standards remains to be determined. Consequently, at present, EPA is unable to establish what the MACT floor would be for chloroform emissions from bleaching systems at these mills, and there is no conceivable beyond-the-floor technology to consider. EPA will make these determinations based on data being developed, and then promulgate for these mills effluent limitations guidelines and standards and, concurrently, MACT standards based on those effluent limitations guidelines and standards. Covered mills would therefore be required to comply with the MACT standards reflecting performance of the effluent limitations guidelines and standards no later than three years after the effective date of those standards, pursuant to CAA section 112(i)(3)(A).

The basis for delaying MACT requirements for chlorinated HAPs other than chloroform (again, from dissolving-grade bleach operations only) differs somewhat. As noted above, the technology basis for control of these HAPs is use of a caustic scrubber. However, when plants substitute chlorine dioxide for chlorine and eliminate hypochlorite (in order to control chloroform emissions and discharges to water, as explained above), a different scrubber will be needed that can adequately control both the chlorine dioxide emissions for

worker safety reasons and the emissions of chlorinated, non-chloroform HAPs. The Agency's concern (shared by the commenters who addressed this question) is that immediate control of the non-chloroform chlorinated HAPs could easily result in plants having to install and then replace a caustic scrubber system in a few years due to promulgation of effluent limitations guidelines and standards and MACT requirements for chloroform. This result would be an inappropriate utilization of scarce pollution control resources.

8. Test Methods

At proposal, the Agency proposed to require that Methods 308 and 26A be used to test for compliance with the provisions of the NESHAP. Method 308 is used to measure methanol in the vent stream. Method 308 had not been validated using Method 301 at the time the NESHAP was proposed. Method 26A is used to measure chlorine in vent streams.

At proposal, commenters objected to the rule referencing an unvalidated test method (Method 308). The commenters also contended that Method 26A should not be used for measuring chlorine in the bleaching system because chlorine dioxide, which is expected to be present in bleaching system vents, is listed as a possible interferant in Method 26A. The commenters suggested using a modified Method 26A developed by the pulp and paper industry.

Since proposal, Method 308 was revised to incorporate suggestions made and data provided by representatives of the pulp and paper industry.

Since proposal, Method 308 has also been validated using Method 301 validation criteria. The validation was conducted by the Atmospheric Research and Environmental Analysis Laboratory in EPA's Office of Research and Development. The results of the validation were reported in the January 1995 issue of the *Journal of the Air and Waste Management Association*. The Agency has also evaluated the commenters' claims regarding Method 26A. The Agency agrees that chlorine dioxide is a potential positive interferant to the method (i.e., concentration measurement could potentially be higher than actual emissions). The final rule includes modifications to Method 26A (based on an NCASI method) to eliminate potential problems with chlorine dioxide interference.

In March 1997, industry informed EPA that it had not used Method 305 to obtain the methanol steam stripper performance data (which was used as the basis for the proposed pulping process condensate standards). For the liquid sampling analysis, NCASI used a direct aqueous injection gas chromatography/flame ionization detection (GC/FID) method described in NCASI Technical Bulletin No. 684, Appendix I. Consequently, the industry contends that Method 305 should not be specified in the final rule for determining compliance with the pulping process condensate standards. However, the NCASI test method has not been validated using EPA Method 301 procedures and it is unlikely that the test method validation would be completed before promulgation of the MACT standard.

The Agency has considered industry's argument and has decided to proceed with specifying Method 305 in the final rule to demonstrate compliance with the pulping process condensate standards. However, if the Agency approves the Method 301 validation procedures for NCASI's GC/FID test method, this method will be referenced as either an alternative or a replacement for Method 305 (for determining methanol concentration only) with a supplemental **Federal Register** notice. EPA believes that this course of action will adequately address the industry's concerns. This decision was reached since the Method 301 validation procedures for NCASI's GC/FID method would likely be completed before kraft mills would have to demonstrate compliance with the pulping process condensate standards.

9. Backup Control Devices and Downtime

The proposal would have required emission limits for the NESHAP to be met at all times, except during periods of startup, shutdown, or malfunction. Allowance for control device or collection system downtime was not specified in the proposed rule, and the need for backup control devices was not addressed.

Commenters asserted that EPA should recognize that control technologies on which the proposed rule was based are not designed to operate 100 percent of the time. Therefore, commenters requested downtime allowances to account for safety related venting and periods when the control device is inoperable. Otherwise, the commenters asserted that costly backup control devices would be necessary to achieve compliance with the NESHAP at all times. They further contended that the environmental benefit for the additional cost associated with the backup controls would be minimal. Commenters recommended a one percent downtime for the LVHC system, four percent for the HVLC system, and ten percent for steam stripper systems. Commenters contended that while most of the LVHC systems had backup controls, very few of the HVLC systems had backup controls. Several commenters added that the Part 63 General Provisions do not address safety venting and downtime necessary for trouble-shooting. Another commenter contended that the Part 63 General Provisions already allow significant emissions and should not be further weakened.

Since proposal, EPA has re-evaluated the need to incorporate downtime or excess emission allowances for LVHC, HVLC, and steam stripper systems into the final rule. Based on data submitted by the pulp and paper industry, EPA has concluded that some allowance for excess emissions is part of the MACT floor level of control. For the final rule, EPA established appropriate excess emission allowances to approximate the level of backup control that exists at the best-performing mills and the associated period of time during which no control device is available. The excess emission allowances in the final rule include periods when the control device is inoperable and when the operating parameter values established during the initial performance test cannot be maintained at the appropriate level.

Based on an analysis of the public comments and the available data regarding excess emissions and the level of backup control in the industry, EPA has determined that an appropriate excess emissions allowance for LVHC systems would be one percent of the operating hours on a semi-annual basis for the control devices used to reduce HAP emissions. The best-performing mills achieve a one percent downtime in their LVHC system control devices. For control devices used to reduce emissions from HVLC systems, EPA has concluded that an appropriate excess emissions allowance would be four percent. The best-performing mills achieve a four percent downtime in the control devices used to reduce emissions from their HVLC system to account for flow balancing problems and unpredictable pressure changes inherent in HVLC systems. For control devices used to control emissions from both LVHC and HVLC systems, the Agency has determined that a four percent excess emissions allowance is appropriate. This decision was made because the control device would be used for the HVLC system, which has the higher emissions allowance. For LVHC and HVLC system control devices, the excess emissions allowances do not include scheduled

maintenance activities that are discussed in the Part 63 General Provisions. The allowances address normal operating variations in the LVHC and HVLC system control devices for which the equipment is designed. The variations would not be considered startup, shutdown, or malfunction under the Part 63 General Provisions (Air Docket A–92–40, IV–D1–103, IV–D1–110, IV–D1–115, IV–E–85, and IV–E–88).

The appropriate excess emissions allowance for steam stripper systems was determined to be 10 percent. The allowance accounts for stripper tray damage or plugging, efficiency losses in the stripper due to contamination of condensate with fiber or black liquor, steam supply downtime, and combustion control device downtime. This downtime allowance includes all periods when the stripper systems are inoperable including scheduled maintenance, malfunctions, startups, and shutdowns. The startup, shutdown, malfunction allowances are included in the stripper allowances because information was not available to differentiate these emissions from normal stripper operating emissions.

Regarding the commenters' discussion of whether the startup, shutdown, or malfunction provisions of the General Provisions would cover maintenance and troubleshooting downtime, EPA has taken public comment and is currently revising the requirements of the General Provisions. Among the changes to the language, EPA intends to incorporate safety-related venting requirements into the General Provisions. However, scheduled maintenance activities are not considered by EPA to qualify for excess emissions allowances. The start-up, shutdown, and malfunction plan specified in the General Provisions should address the periods of excess emissions that are caused by unforeseen or unexpected events.

10. Equipment Enclosures, Closed-Vent Systems, and Control Equipment, and Condensate Conveyance System

a. Requirements for Closed-Vent Systems. At proposal, the Agency required specific standards and monitoring requirements for closed-vent systems. The standards required: (1) Maintaining a negative pressure at each opening, (2) ensuring enclosure openings that were closed during the performance test be closed during normal operation, (3) designing and operating closed-vent systems to have no detectable leaks, (4) installing flow indicators for bypass lines, and (5) securing bypass line valves. Monitoring requirements included visual inspections of seal/closure mechanisms and closed-vent systems, and demonstrations of no detectable leaks in the closed-vent system.

Commenters to the proposed NESHAP contended that visual inspections were not necessary due to durability of the materials used by this industry to construct the collection system. In addition, commenters contended that leak detections were not necessary since systems are typically operated at negative pressure. The commenters also opposed requirements for seals and locks on bypass lines because the bypass lines are installed for purposes of personnel safety, equipment protection, and to prevent explosions.

The Agency evaluated the comments and has decided to make the following changes to the closed-vent system requirements. The Agency agreed with the commenters that most closed-vent systems will be under negative pressure. Any leaks, therefore, would pull air into the collection system rather than release HAPs to the atmosphere. Therefore, the Agency revised the requirement for demonstration of no detectable emissions to apply only to portions of the closed-vent system operated under positive pressure. The Agency also agreed that requiring a lock and key-type seal on bypass lines would be overburdensome and could potentially pose a safety hazard. The intention of the requirements was to prevent circumvention of the control device by venting directly to the atmosphere. The Agency believes that this assurance can be achieved using car seals or seals that could easily be broken, to indicate when a valve has been turned. Proper recordkeeping is also necessary to demonstrate proper operation. Therefore, the Agency revised the bypass line requirements to allow the use of car seals but require log entries recording valve position, flow rate, and other parameters. The Agency has modified the enclosure requirements to allow for short-term openings for pulp sampling and maintenance.

The final rule retains the visual monitoring requirements. The requirements are necessary to ensure proper operation of collection systems and can be conducted at a reasonable cost.

b. Concentration Limit for Combustion Devices and Design Incinerator Operating Parameters. At proposal, the NESHAP would have required vent streams to be controlled in a combustion device that achieves 98 percent reduction of HAPs or outlet HAP emission concentrations of 20 ppmv corrected to three percent oxygen. Alternatively, mills could comply with the control requirements by routing vent streams to a design incinerator operating at 1,600 °F and a residence time of 0.75 seconds, or to a boiler, lime kiln, or recovery furnace.

Commenters on the proposed rule objected to the 20 ppmv limit at a three percent oxygen correction factor. Some commenters claimed that incinerator exhaust streams in the pulp and paper industry have an oxygen content in excess of 10 percent. Therefore, if the outlet concentration was corrected to three percent oxygen, the concentration level would not be achievable. Some commenters recommended increasing the correction factor to 10 percent oxygen.

The 20 ppmv limit represents the performance that is achieved on low concentration streams by a well designed combustion device. This limit was based on previous EPA studies (Air Docket A–79–32, II–B–31). The three percent oxygen correction factor at proposal was based on stream characteristics of other industries, such as the synthetic organic chemical manufacturing industry. The three percent correction factor has been used on many previous standards for controlling organic pollutants. EPA re-evaluated the three percent correction factor to ensure that it is appropriate for the pulp and paper industry. Test data supplied by the industry confirmed their comments that the oxygen content of the incinerator flue gas is typically greater than ten percent at pulp and paper mills. Based on the industry data and the thermodynamic models, EPA changed the oxygen correction factor to ten percent (Air Docket A–92–40, IV–B–19). Therefore, the final rule allows combustion devices to be in compliance if they reduce HAP concentrations to 20 ppmv at ten percent oxygen. Information supplied by the pulp and paper industry indicates that many of the existing incinerators meet this limit.

Commenters on the proposed rule objected that the requirements for the design incinerator were too stringent and that equivalent control could be achieved at lower temperatures. Many commenters requested that the Agency allow incinerators meeting the operating conditions in the kraft NSPS of 1,200 °F and 0.5 seconds residence time to be used for the NESHAP.

EPA has decided not to change the proposed design incinerator operating parameters for the NESHAP because the parameters are necessary to meet the MACT floor. EPA would first like to clarify that the final rule does not limit owners or operators of incinerators to operate at the specified temperatures and residence times. Any control device

that is demonstrated to achieve 98 percent destruction of HAPs will comply with the rule. Any thermal oxidizer which reduces HAP emissions to a concentration of 20 ppmv at ten percent oxygen will also comply with the rule. The 98 percent destruction requirement represents the control level achieved by well-operated combustion devices. The 20 ppmv limit represents the performance achieved by well-operated combustion devices on low concentration vent streams.

Second, EPA has made this part of the rule as flexible as possible while still achieving a level of control reflecting MACT. In the December 17, 1993 proposal and in this final rule, EPA developed compliance alternatives in order to reduce the compliance testing burden. The compliance alternatives (i.e., operating thermal oxidizers at a temperature of 1,600 °F and a residence time of 0.75 seconds) were developed to ensure that the thermal oxidizers perform at a level that would meet the destruction efficiency requirements. The operating parameters are based on previous Agency studies that show that these conditions are necessary to achieve 98 percent destruction of HAPs. However, the NSPS operating parameters (1,200 °F and 0.5 seconds residence time) do not destroy HAPs to this extent.

The purpose of the kraft NSPS was to reduce emissions of TRS compounds. EPA has evaluated the temperature and residence time required by the NSPS to determine whether the NSPS temperature and residence time are sufficient to achieve 98 percent reduction of HAPs. EPA's analysis indicates that while the NSPS requirements are sufficient to achieve 98 percent destruction of TRS compounds, kinetic calculations for methanol (the majority of HAP in pulping vent gases) show that the NSPS criteria will not achieve 98 percent reduction of HAPs (Air Docket A–92–40, IV–B–18). Additionally, EPA evaluated incinerator performance data submitted by industry (Air Docket A–92–40, IV–J–33). The data indicated that the NSPS operating parameters were not sufficient for achieving 98 percent destruction of methanol. This conclusion was reached by EPA since the operating conditions (i.e., temperature and residence time) of the incinerators that achieved 98 percent methanol destruction were greater than the levels specified in the kraft NSPS. Therefore, the NSPS specifications will not meet the requirements of MACT for new and existing sources.

c. Condensate Collection System. In the December 17, 1993 proposal, EPA proposed to require pulping process condensate collection systems to be designed and operated without leaks. EPA proposed that all tanks, containers, and surface impoundments storing applicable condensate streams were required to be enclosed and all vent emissions must be routed to a control device by means of a closed-vent system. A submerged fill pipe would have been required on containers and tanks storing an applicable condensate stream or any stream containing HAP removed from a condensate stream. All drain systems that received or managed applicable condensate streams would have been required to be enclosed with no detectable leaks and any HAP emissions from vents were required to be routed to a control device. Several commenters on the proposed pulp and paper NESHAP contended that the proposed requirements were overly burdensome and, in some cases, unnecessary.

After the pulp and paper NESHAP was proposed, the Agency promulgated a separate rulemaking in 40 CFR Part 63, Subpart RR (National Emission Standards for Individual Drain Systems). This rule established emission control, inspection and monitoring, and recordkeeping and reporting requirements for individual drain systems. The individual drain system requirements specify that air emissions from collection systems must be controlled using covers or seals, hard-piping, or venting of individual drain systems through a closed-vent system to a control device or a combination of these control options. The emission control techniques specified in the individual drain system standard (i.e., covers/seals and vent combustion) are common techniques that are applicable to a variety of wastewater collection systems, regardless of the type of process that produced the wastewater streams.

EPA compared the collection system requirements contained in the proposed pulp and paper NESHAP with the individual drain system requirements in subpart RR. Since the subpart RR requirements are consistent with the intent of the proposed standards, EPA concluded that the requirements of subpart RR constitute MACT for the pulp and paper industry. The control costs presented in the ''Pulp, Paper, and Paperboard Industry-Background Information for Promulgated Air Emission Standards, Manufacturing Processes at Kraft, Sulfite, Soda, Semi-Chemical, Mechanical, and Secondary and Non-wood Fiber Mills, Final EIS''(EPA–453/R–93–050b) were based on industry estimates for hard-piping systems. The Agency has concluded that these costs would be the same or greater than would be needed for complying with the requirements of subpart RR.

The final pulp and paper NESHAP references 40 CFR Subpart RR for the standards for individual drain systems for the pulping process condensate closed collection system. The Subpart RR standards provide uniform language that simplifies compliance and enforcement.

The final rule requires tanks to be controlled as at proposal, but containers and surface impoundments are not required to be controlled. Public comments indicated that containers are not used in the pulp and paper industry. The Agency's intention in the proposed rule was not to require surface impoundments to be controlled, except when used as part of the condensate collection system. After further review of this issue, the Agency has determined that mills do not use and are unlikely to use surface impoundments as part of their closed collection system for condensate streams and therefore that the language on control of surface impoundments does not need to appear in the rule.

11. Interaction With Other Rules

a. Prevention of Significant Deterioration/New Source Review (PSD/NSR). To comply with the MACT portion of the pulp and paper cluster rule, mills will route vent gases from specified pulping and condensate emission points to a combustion control device for destruction. The incineration of these gases at kraft mills has the potential to generate sulfur dioxide (SO_2) and, to a lesser degree, nitrogen oxides (NO_X). The emission increases of SO_2 and NO_X may be of such magnitude to trigger the need for preconstruction permits under the nonattainment NSR or PSD program (hereinafter referred to as major NSR).

Industry and some States have commented extensively that in developing the rule, EPA did not take into account the impacts that would be incurred in triggering major NSR. Commenters indicated that major NSR would: (1) Cost the pulp and paper industry significantly more for permitting and implementation of additional SO_2 or NO_X controls than predicted by EPA; (2) impose a large permitting review burden on State air quality offices; and (3) present difficulties for mills to meet the proposed NESHAP compliance schedule of 3 years due to the time required to obtain a preconstruction permit. Industry commenters have stated that the pollution control project

(PCP) exemption allowed under the current PSD policy provides inadequate relief from these potential impacts and recommended including specific language in the pulp and paper rule exempting MACT compliance projects from NSR/PSD.

In a July 1, 1994 guidance memorandum issued by EPA (available on the Technology Transfer Network; see ''Pollution Control Projects and New Source Review (NSR) Applicability'' from John S. Seitz, Director, OAQPS to EPA Regional Air Division Directors), EPA provided guidance for permitting authorities on the approvability of PCP exclusions for source categories other than electric utilities. In the guidance, EPA indicated that add-on controls and fuel switches to less polluting fuels qualify for an exclusion from major NSR. To be eligible to be excluded from otherwise applicable major NSR requirements, a PCP must on balance be ''environmentally beneficial,'' and the permitting authority must ensure that the project will not cause or contribute to a violation of a national ambient air quality standard (NAAQS) or PSD increment, or adversely affect visibility or other air quality related values (AQRV) in a Class I area, and that off-setting reductions are secured in the case of a project which would result in a significant increase of a non-attainment pollutant. The permitting authority can make these determinations outside of the major NSR process. The 1994 guidance did not void or create an exclusion from any applicable minor source preconstruction review requirements in an approved State Implementation Plan (SIP). Any minor NSR permitting requirements in a SIP would continue to apply, regardless of any exclusion from major NSR that might be approved for a source under the PCP exclusion policy.

In the July 1, 1994 guidance memorandum, EPA specifically identified the combustion of organic toxic pollutants as an example of an add-on control that could be considered a PCP and an appropriate candidate for a case-by-case exclusion from major NSR. For the purposes of the pulp and paper MACT rule, EPA considers that combustion for the control of HAP emissions from pulping systems and condensate control systems to be a PCP, because the combustion controls are being installed to comply with MACT and will reduce emissions of hazardous organic air pollutants. EPA also considers the reduction of these pollutants to represent an environmental benefit. However, EPA recognizes that the incidental formation of SO_2 and NO_X due to the destruction of HAPs will occur. Consistent with the 1994 guidance, the permitting authority should confirm that, in each case, the resultant emissions increase would not cause or contribute to a violation of a NAAQS, PSD increment, or adversely affect an AQRV.

The EPA believes that the current guidance on pollution control projects adequately provides for the exclusion from major NSR of air pollution control projects in the pulp and paper industry resulting from today's rule. Such projects would be covered under minor source regulations in the applicable state implementation plan (SIP), and permitting authorities would be expected to provide adequate safeguards against NAAQS and increment violations and adverse impacts on air quality related values in Federal Class I areas. Only in those cases where potential adverse impacts cannot be resolved through the minor NSR programs or other mechanisms would major NSR apply.

The EPA recognizes that, where there is a potential for an adverse impact, some small percentage of mills located near Class I PSD areas might be subject to major NSR, i.e., the permitting authority determines that the impact or potential impact cannot be adequately addressed by its minor NSR program or other SIP measures. If this occurs, there is a question whether MACT and NSR compliance can both be done within the respective rule deadlines. EPA believes, however, that the eight year compliance deadline provided in the final MACT rule for HVLC kraft pulping sources substantially mitigates the potential scheduling problem. The equipment with the eight year compliance deadline are the primary sources of the additional SO_2 and NO_X emissions. The additional time should be sufficient to resolve any preconstruction permitting issues.

While the Agency believes that eight years is sufficient for kraft mills with HVLC systems to meet permitting requirements, industry has raised concerns that there could be a potential problem for a few mills in Class I attainment areas that are required to comply with the final rule in three years. The PCP exemption and extended compliance schedule may not resolve all NSR conflicts for every mill. Although too speculative to warrant disposition in this rule, EPA is alert to this potential problem and will attempt to create implementation flexibility on a case-by-case basis should a problem actually occur.

Commenters requested that the PCP exclusion also be expanded to actions undertaken at mills that enroll in the Voluntary Advanced Technology (AT) Incentives Program in the effluent limitations guidelines and standards portion of today's rule. In the July 23, 1996 notice on changes to the NSR Program (61 FR 38250), EPA solicited comments on the appropriate scope of the PCP exclusion. EPA also solicited comments in the July 15, 1996 supplemental pulp and paper effluent guidelines notice (61 FR 36857) on whether advanced water pollution control technologies implemented by the pulp and paper industry should be eligible for an exclusion from major NSR and if so, whether the exclusion should be implemented under the provisions of the PCP exclusion under the NSR proposed regulations. In the context of these notices, EPA received several comments in favor of extending the PCP exclusion to multi-media activities, such as those that would be undertaken for the Voluntary Advanced Technology Incentives Program but received little information on appropriate criteria for determining the relative benefits of reduced water pollution to potential coincident increases in air pollution.

The Agency believes that, depending on the control technologies selected by a mill, the potential exists for an overall environmental benefit to result from control strategies implemented under the Voluntary Advanced Technology Incentives Program. However, unlike the MACT rule in today's action, where the controls that would be installed to reduce hazardous air pollutants are fairly well known and the potential pollutant tradeoffs within the same environmental media are fairly well understood, the Agency is less certain about the controls that might be installed to comply with this Voluntary Advanced Technology Incentives Program and the potential pollutant tradeoffs that may occur across environmental media. Therefore, while the Agency is continuing to consider extending this PCP status to activities undertaken to implement the Voluntary Advanced Technology Incentives Program, the Agency is not extending that status in today's action because the Agency currently lacks sufficient information to establish a process and set of criteria by which a determination could be made as to whether these advanced control technologies result in an overall environmental benefit at individual mills that participate in this program. The Agency intends to continue discussions with stakeholders on a process and set of criteria by which a determination could be made as to the appropriateness of extending the PCP exclusion to controls installed at

individual mills to comply with the Voluntary Advanced Technology Incentives Program. Because the control technologies that could be installed to implement the Voluntary Advanced Technology Incentives Program may vary significantly from one mill to another, mills that want controls implemented within the context of the Voluntary Advanced Technology effluent program to be considered PCP will likely need to make a site-specific demonstration that such controls result in an overall environmental benefit. When a mill would need to make such a demonstration would depend upon that particular mill's compliance timeline—dictated by the AT Incentives Tier to which they commit and the time necessary to get applicable permits approved. While it is not possible at this time to identify the criteria the Agency would use for approving a PCP exclusion, the Agency would not consider projects which result in any increases in emissions of highly toxic compounds to be an acceptable candidate PCP. For example, the Agency believes it would not be environmentally acceptable to give the PCP exclusion to an activity which results in a chlorinated material being sent to a boiler that would result in the release of a chlorinated toxic air pollutant. The Agency also believes that the public should be provided an opportunity to review and comment on mill-specific cases where a PCP exclusion is being considered for these advanced water technologies, particularly if there would be a potentially significant emissions increase of criteria air pollutants such as SO_2 or NO_X.

Since mills must declare within one year of promulgation of the cluster rules whether they will participate in the Voluntary AT Incentives Program, the Agency is aware that mills would like to know whether a mechanism exists whereby they may apply for a PCP exclusion among the many factors that may influence their participation in this incentives program. In order for the Agency to proceed further on this issue, the Agency again is requesting that interested stakeholders submit information on the types of control technologies that could be installed under the Voluntary AT Incentives Program along with information on the type and potential magnitude of collateral air pollutant increases that may occur at mills. The Agency requests information from stakeholders that could be useful for developing a process by which mills would apply for the PCP exclusion and for setting forth criteria for determining whether an activity performed under the Voluntary AT Incentives Program qualifies for the PCP exclusion. Given the potentially varying control strategies that could be adopted by participating mills, the Agency also requests information that may be useful in assessing whether generic guidance on when a PCP exclusion may be appropriate should be set forth within the context of the NSR Reform effort or whether NSR determinations should more appropriately be made in the context of mill-specific applications. The EPA needs this information within 60 days of the publishing of this notice to evaluate the information and proceed with this issue in a useful time period for mills to make their decisions on participation in the Voluntary AT Incentives Program. Stakeholders should submit information on this topic directly to Ms. Penny Lassiter, Emission Standards Division (MD–13), U.S. Environmental Protection Agency, Research Triangle Park, NC 27711.

b. Resource Conservation and Recovery Act (RCRA)/Boilers and Industrial Furnaces (BIF). One of the options for controlling emissions from pulping process condensates is to steam strip HAPs, primarily methanol, from kraft pulping process condensate streams. After the HAPs are removed, the vent gas from the steam stripper is required to be sent to a combustion device for destruction. Several commenters pointed out that some mills may choose to concentrate the methanol in the steam stripper vent gas, using a rectification column, and burn the condensate as a fuel.

However, the concentrated methanol condensate that would be derived from the steam stripper overheads may be identified as hazardous waste under the Resource Conservation and Recovery Act (RCRA) because it exhibits the ignitability characteristic. See 40 CFR 261.21. Boilers burning such a hazardous waste fuel would ordinarily be required to comply with emission standards set out in 40 CFR Part 266 Subpart H (the so-called BIF regulation, i.e., standards for boilers and industrial furnaces burning hazardous waste). Several commenters recommended incorporating a ''clean fuels'' exclusion into the pulp and paper NESHAP so that the condensate can be burned for energy recovery without the combustion unit also being subject to the RCRA rules. The ''clean fuels'' exclusion is a recommendation from EPA's Solid Waste Task Force to allow recovery of energy from waste-derived fuels that are considered hazardous only because they exhibit the ignitability characteristics and do not contain significant concentrations of HAP. For background information see 61 FR at 17459–69 (April 19, 1996), where EPA proposed such an exclusion based on similarity of waste-derived fuels to certain fossil fuels.

The Agency proposed to exclude this practice from RCRA regulation in the March 8, 1996 notice and solicited comments on this determination (61 FR at 9396). All of the comments supported granting this exemption. As stated in the notice, EPA does not believe that RCRA regulation of the rectification and combustion of the condensate is appropriate or necessary. The rectification practice would not increase environmental risk, would reduce secondary environmental impacts, and would provide a cost savings. Moreover, the burning of condensate will not increase the potential environmental risk over the burning of the steam stripper vent gases prior to condensation. (See generally 61 FR at 9397.) Finally, consideration of risk would more appropriately be handled as part of the section 112(f) residual risk determination required for all sources after implementation of MACT standards. For these reasons, EPA will exclude specific sources at kraft mills that burn condensates derived from steam stripper overhead vent gases from RCRA, including condensates from the steam stripper methanol rectification process. The scope of this exclusion is limited to that requested by commenters, combustion at the facility generating the stream. (Limitation of the scope of the exclusion to on-site burning also eliminates questions about whether RCRA regulation is needed to assure proper tracking and transport of the material.)

B. Effluent Limitations Guidelines and Standards

1. Subcategorization

The subcategorization scheme being promulgated today for effluent limitations guidelines and standards for the pulp, paper, and paperboard industry replaces the subcategorization of this industry that dates back to 1974. EPA's reasons for combining and reorganizing the 26 old subcategories (formerly found in Parts 430 and 431) into 12 new subcategories are set forth below, in the proposal, see 58 *FR* at 66098–100, and in ''Selected Issues Concerning Subcategorization'' (DCN 14497, Volume 1).

In reorganizing Part 430 to comport with the new subcategorization scheme, EPA has reprinted in their entirety the current effluent limitations guidelines and standards applicable to the newly

formed subcategories. The only substantive changes to the current effluent limitations guidelines and standards are the BAT limitations, NSPS, PSES, PSNS, and best management practices being promulgated today for the Bleached Papergrade Kraft and Soda subcategory (subpart B) and the Papergrade Sulfite subcategory (subpart E). In addition, EPA is promulgating the Voluntary Advanced Technology Incentives Program applicable to subpart B. EPA is making no changes to the BPT and BCT limitations previously promulgated for what are now subparts B and E. Similarly, EPA is retaining the NSPS promulgated in 1982 in new Subparts B and E for new sources that commenced discharge that met the 1982 NSPS after June 15, 1988 but before June 15, 1998 provided that the new source was constructed to meet those standards. EPA is also retaining, without substantive revision, the new source pretreatment standards previously promulgated for subparts B and E for facilities constructed between June 15, 1988 and June 15, 1998.

These limitations and standards are recodified at subparts B and E in the form of segments corresponding to the old subcategorization scheme. (In re-codifying these limitations and standards, EPA has simplified the text introducing the limitations tables, but has not changed the former regulations' substance.) Direct discharging mills currently subject to the 1982 NSPS remain subject to those standards until the date ten years after the completion of construction of the new source or during the period of depreciation or amortization of such facility, whichever comes first. See CWA section 306(d). After such time, the BAT limitations promulgated today apply for toxic and nonconventional pollutants. Limitations on conventional pollutants will be based on the formerly promulgated BPT/BCT limitations corresponding to the BPT/BCT segment applicable to the discharger or on the 1982 NSPS for conventional pollutants, whichever is more stringent.

EPA is making no substantive changes to the limitations and standards applicable to any other subcategory. EPA will promulgate new or revised effluent limitations guidelines and standards, as appropriate, for the remaining subcategories at a later date. See Table II–2. Until then, the previously promulgated effluent limitations guidelines and standards remain in effect.

EPA is making one non-substantive revision in each subpart. Where the existing regulation includes a narrative statement describing the procedure to calculate the effluent limitations guidelines and standards for non-continuous dischargers, e.g., 40 CFR 430.13, 430.15, 430.62(a)–(d), 430.65 (1996 ed.), EPA has performed the calculations and presented the results in tables. The resulting effluent limitations and standards are the same; this procedure was done simply to streamline the regulation and to make it easier to apply for the permit writer.

In order to ensure that any facilities that would not have been subject to the previous subparts will not inadvertently be subject to limitations and standards set forth in the newly redesignated subparts, EPA is using the applicability language of each previously promulgated subpart to define the applicability of the newly redesignated subparts that consolidate them. For example, rather than promulgate the applicability statement proposed for subpart C, see 58 FR at 66199, EPA has instead codified as a single applicability statement, the applicability statements of former subparts A, D and V, which new subpart C now comprises. See 40 CFR 430.30.

The Agency received comments that the groupings comprising the new subcategories are unreasonable because they purportedly ignore distinctions among facilities that affect their ability to implement the technologies that form the basis of the effluent limitations guidelines and standards promulgated for subparts B and E. Thus, some commenters asserted, these facilities would be unable to meet the same limits as other mills in the same new subcategory. EPA considered these comments in detail where they involved mills subject to new effluent limitations guidelines and standards promulgated today in order to determine whether the groupings of the mills into subparts B and E were appropriate. In response to these comments, EPA segmented subpart E. See section VI.B.6.a. When EPA develops the final regulations for the remaining subcategories, EPA similarly will consider if it is appropriate to fine-tune these initial groupings to better respond to material differences between facilities.

EPA also acknowledges that the subcategorization scheme promulgated today was developed based on data received in the ''1990 National Census of Pulp, Paper, and Paperboard Manufacturing Facilities,'' and that there have been changes in the industry since that data gathering effort. Because the resubcategorization has no substantive effect on any mill other than those with production in subparts B and E (for whom revised effluent limitations guidelines and standards are promulgated today), EPA believes that changes in the industry affecting the remaining subparts are best addressed when EPA makes the decision whether to revise the regulations for those subcategories.

a. Bleached Papergrade Kraft and Soda subcategory. The Bleached Papergrade Kraft and Soda subcategory, for which regulations are promulgated in this rulemaking at 40 CFR part 430 subpart B, encompasses the former subparts G (market bleached kraft), H (BCT bleached kraft), I (fine bleached kraft), and P (soda). EPA has retained the applicability statements associated with those former subparts. See 40 CFR 430.20. EPA intends for this merged subcategory to apply to mills that chemically pulp wood fiber using a kraft method with an alkaline sodium hydroxide and sodium sulfide cooking liquor to produce bleached papergrade pulp and/or bleached paper/paperboard. It also applies to mills that chemically pulp wood fiber using a soda method with an alkaline sodium hydroxide cooking liquor. Principal products of bleached kraft wood pulp include papergrade kraft market pulp, paperboard, coarse papers, tissue papers, uncoated free sheet, and fine papers, which include business, writing, and printing papers. Principal products of bleached soda wood pulp are fine papers, which include printing, writing, and business papers, and market pulp.

b. Papergrade Sulfite subcategory. The Papergrade Sulfite subcategory, for which regulations are promulgated in this rulemaking, is defined as 40 CFR part 430 subpart E and encompasses former subpart J (papergrade sulfite-blow pit wash) and subpart U (papergrade sulfite-drum wash). EPA has retained the applicability statements associated with those former subparts. See 40 CFR 430.50. EPA intends for this merged subcategory to apply to mills that chemically pulp wood fiber using a sulfite method, with or without brightening or bleaching, using an acidic cooking liquor of calcium, magnesium, ammonium, or sodium sulfites to produce bleached papergrade pulp and/or bleached paper/paperboard. The provisions of this merged subpart apply regardless of whether blow pit pulp washing techniques or vacuum or pressure drum pulp washing techniques are used.

2. BPT/BCT for the Bleached Papergrade Kraft and Soda Subcategory and the Papergrade Sulfite Subcategory

a. Background. EPA proposed to revise effluent limitations for the conventional pollutants biochemical

oxygen demand (BOD_5) and total suspended solids (TSS) based on the best practicable control technology currently available (BPT) for all of the proposed subcategories, including Bleached Papergrade Kraft and Soda and Papergrade Sulfite. As presented in the proposal, 58 *FR* at 66105, EPA highlighted several controversial issues concerning the BPT limitations, their calculation, and their interpretation. EPA also presented a rationale and methodology and identified related controversies for establishing limitations based on the best conventional pollutant control technology (BCT).

b. BPT. In December 1993, the Agency proposed to revise BPT for conventional pollutants for subparts B and E and specifically solicited comment on that proposed decision. See 58 FR at 66105–06. In response, EPA received comments claiming that EPA lacks the legal authority to revise BPT once BPT effluent limitations guidelines have been promulgated. EPA also received other comments asserting that the Clean Water Act compels EPA to revise BPT. Although the Agency believes that it has the statutory authority to revise BPT, the Agency also believes that it has the discretion to determine whether to revise BPT effluent limitations guidelines in particular circumstances. The question of EPA's legal authority is not relevant here, however, because EPA has decided, in the exercise of its discretion, that it is not appropriate to revise BPT effluent limitations guidelines for conventional pollutants for subparts B and E at this time. Instead the current BPT effluent limitations guidelines for conventional pollutants will continue to apply to these subcategories.

EPA bases this decision on its determination that the total cost of applying the proposed BPT model technology is disproportionate in this instance to the effluent reduction benefits to be achieved. See CWA section 304(b)(1)(B). When setting BPT limitations, EPA is required under section 304(b) to perform a limited cost-benefit balancing to make sure that costs are not wholly out of proportion to the benefits achieved. See, e.g., *Weyerhaeuser Co.* v. *Costle*, 590 F.2d 1011 (D.C. Cir. 1978). It therefore follows that EPA is authorized to perform such balancing when determining whether to revise existing BPT limitations.

Mills in subparts B and E have significantly reduced their loadings of BOD_5 and TSS since promulgation of the current BPT effluent limitations guidelines in 1977. Although additional removals could be achieved if BPT were revised, EPA has determined for subpart B and, separately, for subpart E that the costs of achieving that incremental improvement beyond either the current BOD_5 and TSS limitations or the current long term average for BOD_5 and TSS are disproportionate to the benefits. A single mill might have to spend as much as $17.4 million in order to upgrade to advanced secondary treatment. See the Supplemental Technical Development Document, DCN 14487. These expenditures are particularly significant when one considers the cumulative costs of this rulemaking. Therefore, EPA has decided not to revise BPT limitations for conventional pollutants for mills in the Bleached Papergrade Kraft and Soda subcategory and the Papergrade Sulfite subcategory at this time.

EPA's decision not to revise BPT limitations for subpart B at this time is also informed by the Agency's long-term goal for this industry: that the industry will continuously improve its environmental performance primarily through sound capital planning and expenditures. EPA has determined that this interplay between potentially more stringent revised BPT limitations and the industry's long-term environmental improvement is an appropriate factor to be considered in this rulemaking with respect to BPT. See CWA section 304(b)(1)(B). It is also consistent with the Clean Water Act's overarching objective, which calls upon EPA to implement the statute's provisions with the goal of eliminating the discharge of pollutants into the Nation's waters. See CWA Section 101(a). In this rulemaking, EPA has determined that the baseline regulatory requirements—effluent limitations guidelines and standards and air emissions standards—are only one component of the framework to achieve long-term environmental goals. EPA believes that the mills of the future will approach closed loop operations, thus achieving minimal impact on the aquatic environment. To promote this, EPA is promulgating an incentives program to encourage subpart B mills to implement pollution prevention leading to the mill of the future. See Section IX.

EPA believes that near-term investments to achieve more stringent BPT effluent limitations for conventional pollutants would divert limited resources away from environmentally more preferable investments in advanced pollution prevention technologies. Thus, EPA is concerned that revising BPT effluent limitations guidelines at this time could discourage mills from achieving even greater environmental results through the Voluntary Advanced Technology Incentives Program. Moreover, EPA estimates that, even without revising BPT limitations for subpart B, loadings of BOD_5, for example, will decline by approximately 20 percent when mills meet the baseline BAT limitations and best management practices requirements promulgated today. Incidental removals are even greater for subpart B mills implementing more advanced technologies (e.g., loadings of BOD_5 are estimated to decline by approximately 30 percent at the Tier I level, and EPA expects substantially greater reductions from Tiers II and III). See Table IX–1. EPA also expects comparable TSS loading reductions to occur. See the Voluntary Advanced Technology Incentives Program Technical Support Document, DCN 14488. In short, because sufficient additional removals of conventional pollutants from subpart B mills can be obtained without revising BPT at this time, EPA has determined that, on balance, the incremental benefits attributable to revised BPT limits do not justify the comparatively high costs associated with achieving those limits. For these additional reasons, EPA has decided not to revise BPT for conventional pollutants for mills in the Bleached Papergrade Kraft and Soda subcategory at this time.

Finally, if additional removals of BOD_5 and TSS are needed to protect particular receiving waters, CWA section 301(b)(1)(C) requires mills on a case-by-case basis to meet more stringent limitations as necessary to achieve applicable water quality standards.

For the foregoing reasons, therefore, EPA has decided, in the exercise of its discretion, that it is not appropriate to revise BPT limitations for conventional pollutants for subparts B and E at this time. Rather, the BPT effluent limitations guidelines promulgated for former subparts G, H, I, and P (now Bleached Papergrade Kraft and Soda subcategory, subpart B) and former subparts J and U (now Papergrade Sulfite subcategory, subpart E) remain in effect. These limitations are recodified at subparts B and E in the form of segments corresponding to the old subcategorization scheme. See 40 CFR 430.22 and 430.52.

c. BCT Methodology. In considering whether to promulgate revised BCT limits for subparts B and E, EPA considered whether there are technologies that achieve greater removals of conventional pollutants than the current BPT effluent limitations guidelines, and whether those technologies are cost-reasonable according to the BCT cost test. At

proposal, EPA presented two alternative methodologies for developing BCT limitations. The first assumed that BPT limits would be revised in the final rulemaking; the alternative analysis was based on the assumption that BPT limits would not be revised. See 58 FR at 66106–07. The principal difference between the two methodologies involved the BPT baseline that EPA would use to compare the incremental removals and costs associated with the candidate BCT technologies. Because the Agency is not revising BPT, EPA used the second alternative to determine whether to revise the current BCT limits for subparts B and E.

d. BCT Technology Options Considered. For the Bleached Papergrade Kraft and Soda subcategory, EPA identified two candidate BCT technologies for the final rule. These were: (i) The technology required to perform at the level achieved by the best 90 percent of mills in the subcategory; and (ii) the technology required to perform at the level achieved by the best 50 percent of mills in the subcategory.

The Papergrade Sulfite subcategory was not divided into segments for the purpose of conducting a BCT analysis because EPA found that treatability of BOD_5 and TSS in the wastewater generated by the three segments does not differ. EPA identified one candidate BCT technology for the Papergrade Sulfite subcategory. This was the technology required to perform at the average level achieved by three mills in the subcategory with at least 85 percent of their production in the segment. Development of candidate BCT technology options based on the best 90 and 50 percent of mills, which EPA used for the Bleached Papergrade Kraft and Soda subcategory, is not appropriate for this subcategory because there are only 11 mills in this subcategory and only four of these have at least 85 percent of their production in the subcategory. The wastewater treatment performance of three of these mills was determined to reflect BCT level performance for the Papergrade Sulfite subcategory. EPA did not consider the wastewater treatment performance of the fourth mill to be representative of the subcategory as a whole because it treats wastewater from liquor by-products manufactured on site, and thus is unique among papergrade sulfite mills.

e. Results of BCT Analysis. EPA evaluated the candidate BCT technologies for both the Bleached Papergrade Kraft and Soda subcategory and the Papergrade Sulfite subcategory and concluded that none of the candidate options passed the BCT cost test. For more details, see the Supplemental Technical Development Document, Section 12, DCN 14487. Therefore, at this time, the Agency is not promulgating more stringent BCT effluent limitations guidelines for the newly constituted subparts B and E. Rather, the BCT limitations promulgated for former subparts G, H, I, and P (now Bleached Papergrade Kraft and Soda subcategory, subpart B) and former subparts J and U (now Papergrade Sulfite subcategory, subpart E) remain in effect. These limitations are recodified at subparts B and E in the form of segments corresponding to the old subcategorization scheme. See 40 CFR 430.23 and 430.53.

3. Pollutant Parameters for BAT/NSPS/PSES/PSNS

a. Dioxin, Furan, and Chlorinated Phenolic Pollutants. EPA is promulgating effluent limitations guidelines and standards for 2,3,7,8-TCDD (''dioxin''), 2,3,7,8-TCDF (''furan''), and 12 specific chlorinated phenolic pollutants for subparts B and E (except for those mills regulated by TCF limitations). For a discussion of EPA's rationale for regulating these parameters, see the proposal, 58 FR at 66102–03 and the proposal Technical Development Document (EPA 821–R–93–019). For a discussion of EPA's pass-through analysis regarding these pollutants, see Section VI.B.5.c(2) and VI.B.6.d.

b. Volatile Compounds. EPA is promulgating effluent limitations guidelines and standards for chloroform for subpart B. For a discussion of EPA's rationale for regulating chloroform, see the proposal, 58 FR at 66102 and the proposal Technical Development Document (EPA 821–R93–019). EPA is not promulgating effluent limitations guidelines and standards for chloroform for subpart E at this time. For a discussion of EPA's pass-through analysis regarding chloroform, see Section VI.B.5.c(2). For the reasons set forth below and in the Supplemental Technical Development Document, DCN 14487, EPA is not promulgating effluent limitations guidelines and standards for the discharge of acetone, methylene chloride, and methyl ethyl ketone (MEK). EPA received no adverse comments in response to its preliminary determination, presented in the July 1996 Notice of Availability, 61 FR at 36839, not to regulate these pollutants.

EPA has reviewed data from both hardwood and softwood mills employing a variety of bleaching processes in an effort to identify factors that contribute to the formation of acetone, methylene chloride, and MEK in the bleach plant. The bleaching processes evaluated included bleaching using elemental chlorine, BAT Option A (elemental chlorine-free (ECF) bleaching using 100 percent chlorine dioxide), BAT Option B (oxygen delignification plus ECF bleaching using 100 percent chlorine dioxide), ECF bleaching using ozone, and totally chlorine-free bleaching. The ranges of loadings for each pollutant were similar across the different bleaching technologies and for both hardwood and softwood mills. The average loadings for these pollutants do not exhibit a performance trend with regard to the bleaching technologies.

In the EPA/Industry long-term study, methylene chloride was found to be a sample- and laboratory-contaminant in certain cases. Among the more recent data reviewed by EPA, methylene chloride was detected in the bleach plant effluent at ten percent of the sampled mills. Where detected, methylene chloride was present at low concentrations. Therefore, because methylene chloride is infrequently detected, because its formation processes are not fully understood, and because the cases in which it is detected are often attributed to sample and laboratory contamination, EPA has decided not to promulgate effluent limitations guidelines and standards for methylene chloride in this rulemaking.

EPA had proposed limitations for acetone and MEK based on limited data indicating that these parameters may be affected by the technology options being considered. EPA has decided not to promulgate effluent limitations guidelines or standards for these parameters because additional data have shown that this is not the case. Moreover, EPA believes that the limitations and new source performance standards being promulgated today for adsorbable organic halides for subpart B mills will ensure that mills will continue to operate their biological wastewater systems at levels necessary to achieve very high removals of these pollutants, thus obviating the need for separate limitations.

In view of the efficacy of biological wastewater treatment in removing acetone and MEK and the fact that process changes have no effect on the levels at which they are generated, EPA is not convinced that these pollutants pass through POTWs. Therefore, EPA is also not setting pretreatment standards for acetone or MEK for subpart B at this time.

With respect to papergrade sulfite mills, EPA expects that, once promulgated, the limitations and standards for AOX based on, among other things, efficient biological

treatment, will ensure that treatment systems are operated at levels necessary to obviate the need for separate limitations for acetone and MEK. Therefore, EPA is deferring its decision on whether to regulate acetone and MEK until that time.

c. Adsorbable Organic Halides (AOX). EPA is establishing BAT limitations, NSPS, and pretreatment standards for the control of adsorbable organic halide (AOX) discharges from mills in the Bleached Papergrade Kraft and Soda subcategory. EPA is also establishing BAT limitations, NSPS, and pretreatment standards to control AOX discharges from mills in the calcium-, magnesium-, or sodium-based segment of the Papergrade Sulfite subcategory. For a discussion of EPA's pass through analysis for AOX discharges from these mills, see Sections VI.B.5.c(2), VI.B.6.d, and the Supplemental Technical Development Document, Section 8, DCN 14487. As discussed in more detail in those sections, EPA is not setting effluent limitations guidelines and standards for AOX for other mills in subpart E at this time.

AOX is a measure of the total chlorinated organic matter in wastewaters. At pulp and paper mills, almost all of the AOX results from bleaching processes. Even though dioxin and furan are no longer measurable using today's analytical methods at the end of the pipe at many mills, the potential for formation of these pollutants continues to exist at pulp and paper mills as long as any chlorine-containing compounds (including chlorine dioxide) are used in the bleaching process. The record demonstrates a correlation between the presence of AOX and the amount of chlorinated bleaching chemical used in relation to the residual lignin in the pulp (expressed as the kappa factor). The record further shows that there is a correlation between the kappa factor and the formation of dioxin and furan. Therefore, EPA concluded that reducing AOX loadings will have the effect of reducing the mass of dioxin, furan, and other chlorinated organic pollutants discharged by this industry. For further discussion of EPA's rationale for regulating AOX, see the Supplemental Technical Development Document (DCN 14487) and response to comments on justification for establishing limitations for AOX (DCN 14497, Vol. I).

EPA's decision to regulate AOX is also based on the fact that AOX, unlike most of the chlorinated organic compounds regulated today, is comparatively inexpensive to monitor for and is easily quantified by applicable analytical methods. Thus, while EPA could have decided to control the formation of dioxin, furan, chloroform, and the 12 regulated chlorinated phenolic pollutants by requiring mills to monitor for those pollutants on a daily basis, EPA also recognizes that testing for those pollutants is expensive and time consuming. In contrast, daily monitoring for AOX as required in today's rule is considerably less expensive. See Section VI.B.8.b(4) and DCN 14487. Additionally, under the Voluntary Advanced Technology Incentives Program, enrolled mills are eligible for reduced AOX monitoring. See Section IX.B.2 and DCN 14488. Moreover, the presence of AOX can be readily measured in mill effluent, in contrast to the presence of many of the chlorinated organic compounds regulated in today's rule, which for the most part are likely to be present at levels that cannot be reliably measured by today's analytical methods. See Section VI.B.5.a(4). Thus, although EPA is not required under the Clean Water Act to consider the environmental or human health effects of its technology-based regulations, EPA has also determined that regulating AOX as part of BAT, NSPS, PSES and PSNS provides further assurance that human health and the environment will be protected against the potential harm associated with dioxin, furan, and the other chlorinated organic pollutants.

d. Chemical Oxygen Demand (COD). The proposed rule included end-of-pipe BAT limitations and PSES for COD. EPA continues to believe that COD limitations can be used to ensure the operation of processes that minimize the discharge of all organic compounds, including toxic organic compounds that are not readily biodegraded. However, the limited data available at this time do not adequately characterize other sources of COD that may be present at some complex mills, although it appears that the COD contributed by these sources may be as great as the COD contribution from the pulp mill and bleach plant areas of the mill. These other sources of COD could include paper machines, mechanical pulping, other on-site chemical pulping, and secondary fiber processing (including deinking). See DCN 13958 and DCN 14495. Even if sufficient data were now available to establish COD limitations and standards for pulp mill operations in subparts B and E, EPA does not have sufficient information at present to evaluate the other sources of COD and the performance of control technologies to limit COD at those sources in order to set national effluent limitations guidelines and standards.

For this reason, EPA is not establishing final effluent limitations guidelines and standards for COD at this time. EPA does, however, intend to promulgate COD limitations and NSPS for the Bleached Papergrade Kraft and Soda and Papergrade Sulfite subcategories in a later rulemaking. For this purpose, EPA will gather additional data to characterize other sources of COD that may be present at complex mills subject to subparts B or E. This effort will be undertaken concurrently with data gathering to assess the need for establishing COD limits for mills operating in other subcategories (Phase II rulemaking). EPA believes that this data-gathering effort will facilitate setting limits in permits for complex mills with other onsite process operations. EPA will also decide as part of the Phase II rulemaking whether COD passes through or interferes with the operation of POTWs and, therefore, whether pretreatment standards for COD would be appropriate for subparts B and E.

While EPA does not have sufficient data to issue national technology-based regulations for COD at this time, EPA strongly urges permitting authorities to consider including COD limitations in NPDES permits for Subpart B and E mills on the basis of best professional judgment. See 40 CFR 125.3(c)(3). Pretreatment authorities should establish COD local limits if COD passes through or interferes with the POTWs within the meaning of the general pretreatment regulations. See 40 CFR 403.5(c). EPA believes that permitting or pretreatment authorities should address COD for the following reasons. Chronic sublethal toxic effects have been found to result from the discharge of treated effluent from bleached and unbleached kraft, mechanical, and groundwood/sulfite pulp mills (see DCNs 3984, 13985, 13975, 13976, 13979, and 00012). These chronic toxic effects were measured as increased liver mixed-function oxydase activity and symptoms of altered reproductive capacity in fish (DCN 60002). This toxicity is associated at least in part with families of non-chlorinated organic materials that are measured by the existing COD analytical method. Some of these materials, including several wood extractive constituents found in pulping liquors, are refractory (i.e., resistant to rapid biological degradation) and thus are not measurable by the five-day biochemical oxygen demand (BOD_5) analytical method.

In order to assist permitting or pretreatment authorities in developing

COD limitations, EPA describes below various processes that mills can use to control COD. The major sources of COD (which includes slowly biodegradable and non-biodegradable organic material) at a pulp mill are the pulp mill and bleach plant areas. Pulping sources of COD include digester condensates and spent pulping liquor. Open screening processes can be a major source of COD discharges. Spent pulping liquor can also be lost from the process through process spills and equipment leaks. Bleach plant filtrates, the recovery area, leaks from turpentine processing areas at softwood mills, and pulp dryers are examples of other sources of COD at pulp mills.

The process changes that form the basis of the effluent limitations guidelines and standards promulgated today include processes that can reduce discharges of primarily non-chlorinated organic compounds. These as yet unidentified refractory organic compounds have been correlated with chronic sublethal aquatic toxicity from pulp mill effluents. By recovering much of the non-chlorinated organic compounds prior to bleaching, discharges of chlorinated organic compounds also are reduced. For example, improved brownstock washing, which is part of the model technology basis for today's regulations, can be operated (for the purposes of achieving COD limitations) to minimize black liquor carryover to the bleach plant and thus reduce the formation of AOX and toxic chlorinated compounds. Another process technology effective at reducing organic discharges associated with pulping liquors is for a mill to return all water from pulp screening to the process, termed a closed screen room.

EPA intends for the best management practices promulgated today for Subparts B and E to lead mills to retain spent pulping liquors in the process, to the maximum extent practicable, through preventing leaks and spills and through capturing those leaks and spills that do occur and returning the organic material to the recovery system. The BMPs are also intended to lead mills to collect intentional diversions of spent pulping liquors and return those materials to the process. However, the BMP regulations do not require that the contained leaked and spilled material be recovered in the process, nor are intentional diversions required to be returned to the process. In the absence of COD limitations, significant quantities of this organic material could be metered to the wastewater treatment system. As a result, while the BMP program will effectively prevent releases of pulping liquors (and soap and turpentine) that would upset or otherwise interfere with the operation of the wastewater treatment system, refractory organic material believed to cause chronic toxic effects could still be discharged at levels greater than the levels achievable through optimized process technologies and effective end--of-pipe treatment. For this additional reason, EPA believes that COD limitations established on a best professional judgment basis would be appropriate.

The COD data considered by EPA are presented in the support document, Analysis of Data for COD Limitations, DCN 13958, for this rule. This support document also presents EPA's estimates (based on data available today) of the ranges of COD effluent load believed to be contributed by other mill operations, which EPA is supplying as limited guidance to permitting and pretreatment authorities. EPA urges permitting authorities to include—and exercise—reopener clauses in NPDES permits for mills subject to Subpart B or E in order to impose or revise COD effluent limitations once effluent limitations guidelines for COD are promulgated.

e. Color and Other Pollutants. EPA proposed BAT limitations and PSES for color for the Bleached Papergrade Kraft and Soda subcategory only. Commenters asserted that EPA should not establish effluent limitations guidelines and standards for color because it is a concern more appropriately addressed in individual permits based on applicable water quality standards. EPA agrees with this comment. The potential for significant aesthetic or aquatic impacts from color discharges is driven by highly site-specific conditions and is best dealt with on a case-by-case basis through individual NPDES permits or, when appropriate, through local limits. Therefore, the Agency is not promulgating technology-based limitations or standards for color. See DCN 14497, Vol. I.

EPA did not propose effluent limitations for four pollutants, including biphenyl, carbon disulfide, dimethyl sulfone, and mercury, and indicated in the Technical Development Document (at Section 7.3.5) that these four pollutants were remaining under consideration for regulation. Based on limited data available to date, EPA has decided not to establish effluent limitations and standards for these pollutants. EPA has reached this decision because these pollutants are not found consistently in effluents and thus they are not directly related to pulping and bleaching processes serving as the basis for BAT and NSPS. EPA notes that where mercury was found to be present, the concentrations at which it was found suggests that a possible source of this pollutant may be contaminants of purchased chemicals. However, the Agency did not obtain any information or data which would either clearly identify the source or sources of mercury or the other pollutants, or provide a basis for identifying applicable control technologies or establishing effluent limitations. Therefore, EPA is not developing effluent limitations and standards. Individual mills may still receive water quality based effluent limitations (Section 301(b)(1)(C)) for any of these pollutants where necessary to protect local water quality.

f. Biocides. EPA is retaining the current effluent limitations guidelines and standards for the biocides pentachlorophenol and trichlorophenol for former subparts G, H, I, and P (now Bleached Papergrade Kraft and Soda subcategory, subpart B) and former subparts J and U (now Papergrade Sulfite subcategory, subpart E). These limitations and standards are recodified at subparts B and E. See 40 CFR 430.24(d), 430.25(d), 430.26(b), 430.27(b), 430.54(b), 430.55(c), 430.56(b), 430.57(b). For subpart B, the limitations and standards are presented in the form of segments corresponding to the old subcategorization scheme. (EPA did not need to track the old subcategorization scheme for subpart E because the limitations and standards for former subparts J and U were the same.) EPA is not codifying any minimum monitoring frequency for these pollutants. See 40 CFR 430.02. In addition, unless the permitting or pretreatment authority decides otherwise, EPA expects that mills would demonstrate compliance with these limitations at the end of the pipe.

As before, the regulations continue to provide that a discharger is not required to meet the biocides limitations or standards if it certifies to the permitting or pretreatment authority that it is not using these compounds as biocides. See, e.g., 40 CFR 430.24(d). (These certification provisions have been approved by the Office of Management and Budget under control number 2040–0033. See 40 CFR 9.1.) EPA notes, however, that mills using chlorine-containing compounds in their bleaching processes are required to meet separate limitations or standards for pentachlorophenol, 2,4,5-trichlorophenol, and 2,4,6-trichlorophenol in connection with the new effluent limitations and standards promulgated today for subparts B and E regardless whether these compounds are

also used as biocides. See, e.g., 40 CFR 430.24(a)(1). (Those compounds are included within the list of the 12 chlorinated phenolic pollutants discussed in Section VI.B.3.a.) EPA is requiring dischargers to demonstrate compliance with these limitations and standards by monitoring for those pollutants at the point where the wastewater containing those pollutants leaves the bleach plant. See, e.g., 40 CFR 430.24(e).

EPA believes it is appropriate to codify separate limitations and standards for those pollutants, even though in very rare cases a mill may be required to comply with both sets. First, although for the same pollutants the two sets of limitations arise from different chemical applications in different parts of the mill. As biocides, pentachlorophenol or trichlorophenol could be used virtually anywhere in a mill's industrial process, but were typically used as slimicides in whitewater recirculation systems. In the limitations and standards promulgated today, however, pentachlorophenol, 2,4,5-trichlorophenol and 2,4,6-trichlorophenol are being regulated because they are found in bleach plant wastewater when chlorine-containing compounds are used for bleaching. Second, EPA expects these pollutants to be reduced to quantities below the minimum level of the applicable analytical method as a result of bleach plant process changes, which is not the case when they are used as biocides. Thus the different limitations and standards found in subparts B and E for these pollutants respond to different situations and reflect different model process technologies. Finally, EPA believes that mills in the Bleached Papergrade Kraft and Soda subcategory or the Papergrade Sulfite subcategory generally do not use pentachlorophenol or trichlorophenol as biocides today. See the Supplemental Technical Development Document, DCN 14487. Therefore, EPA expects that each mill will be able to certify that it is not using the compounds as biocides and therefore will not be subject to the biocides-related limitations.

4. Analytical Methods

In this rule, EPA is promulgating Method 1650 for the analysis of AOX and Method 1653 for the analysis of certain chlorinated phenolic compounds.

a. Authority. The analytical methods in this final rule are promulgated under the authority of CWA sections 301, 304(h), 307, 308, and 501(a). Section 301 of the Act prohibits the discharge of any pollutant into navigable waters unless the discharge complies with an NPDES permit issued under section 402 of the Act. Section 301 also specifies levels of pollutant reductions to be achieved by certain dates. Section 304(h) of the Act requires the EPA Administrator to ''promulgate guidelines establishing test procedures for the analysis of pollutants that shall include the factors which must be provided in any certification pursuant to section 401 of this Act or permit applications pursuant to section 402 of this Act.'' These test procedures for the analysis of pollutants also assist in the implementation of Section 301. Section 501(a) of the Act authorizes the Administrator to prescribe such regulations as are necessary to carry out her function under this Act.

The Administrator has also made these test procedures (methods) applicable to monitoring and reporting of NPDES permits (40 CFR part 122, §§ 122.21, 122.41, 122.44, and 123.25), and implementation of the pretreatment standards issued under section 307 of CWA (40 CFR part 403, §§ 403.10 and 403.12). Section 308 provides authority for information gathering.

b. Background and History. In the December 17, 1993 proposal, EPA referenced a compendium entitled ''Analytical Methods for the Determination of Pollutants in Pulp and Paper Industry Wastewater.'' This compendium contained methods that had not been promulgated at 40 CFR part 136, but would be applicable for monitoring compliance with the limitations and standards proposed for part 430 at that time. The compendium included methods for the analysis of CDDs and CDFs (i.e., dioxin and furans), AOX, chlorinated phenolics, and color. These methods were proposed for promulgation at 40 CFR part 430 to support the proposed regulation and were included in the docket for the proposed pulp and paper rule.

EPA received more than 200 individual comments and suggestions concerning the proposed analytical methods. Some of these were comments on the methods not being promulgated today. Many of the comments and suggestions were technically detailed, ranging from suggestions on changing the integration time in Method 1650 (for AOX) to reducing the spike levels for labeled compounds used in Method 1653 (for chlorinated phenolics). Other comments raised questions about EPA's approach to technical issues and policies regarding the handling of analytical data. EPA has included a summary of the detailed comments and specific responses to those comments in the record for today's rule.

On July 15, 1996, EPA published a notice of availability that, among other things, summarized the changes the Agency intended to make to the proposed or promulgated analytical methods and stated that detailed revisions to the methods would be added to the record at a later date. See 61 FR at 36848–49. In promulgating today's rule, EPA has implemented the changes identified in the July 1996 Notice. These changes are summarized below and detailed in the response to comments provided in the record.

c. Analytical Methods Promulgated Today. EPA has revised the analytical methods compendium entitled ''Analytical Methods for the Determination of Pollutants in Pulp and Paper Industry Wastewater'' to incorporate revisions to the methods made since proposal. This compendium (EPA–821–B–97–001, August 1997) contains the analytical methods to be used for monitoring compliance with the limitations and standards promulgated today for subparts B and E. The compendium includes Method 1650 for the determination of AOX and Method 1653 for the determination of chlorinated phenolics. These two analytical methods are being promulgated today as appendices to 40 CFR part 430. They have not yet been promulgated at 40 CFR part 136.

(1) Method 1650: AOX by Adsorption and Coulometric Titration

Method 1650 can be used to measure AOX in water and wastewater. AOX is a measure of halogenated organic compounds that adsorb onto granular activated carbon (GAC). The method involves adsorption of the organic halides (chlorine, bromine, iodine) in water onto GAC, removal of inorganic halides by washing, combustion of the organic halides (along with the GAC) to form hydrogen halides, and titration of the hydrogen halides with silver ions in a microcoulometer. The results are reported as organic chlorine even though other halides may be present because chlorine is the halide of concern in pulp and paper wastewaters. EPA studies have demonstrated a Method Detection Limit (MDL) of 6.6 μg/L. Based on this MDL and on calibration of the microcoulometer, the minimum level (ML) in Method 1650 has been determined to be 20 μg/L. The minimum level and other performance attributes for this method have been validated in single laboratory method validation studies and by use in data gathering for today's final rule. All laboratories that used Method 1650 in the data gathering effort calibrated their instruments at the ML.

Since proposal, EPA has made changes to Method 1650 to improve the ease of use and the reliability of this method. These changes are reflected in the version of Method 1650 being promulgated today and they largely reflect comments and suggestions made following proposal of the method. In response to comments, EPA made several changes to Method 1650, including: adjustment of the breakthrough specification to 25 percent based on recent data; allowance of a 100- or 25-mL adsorption volume, provided the sensitivity requirements in the method are met; provision of greater flexibility in allowable glassware sizes; use of 100-mL volumes of standards for calibration and other purposes to conserve reagents; use of only 2-mm columns to make the column procedure more reproducible; adjustment of the QC acceptance criteria based on an industry interlaboratory method validation study; and the addition of a minimum integration time of 10 minutes to assure that all AOX is measured. In addition, the format of the method has been modified to reflect the standardized format recommended by EPA's Environmental Monitoring Management Council (EMMC). For a more detailed discussion of the changes made to Method 1650 since proposal, see DCN 14497, Vol. VII.

EPA disagreed with several comments on EPA's proposed Method 1650 and therefore did not make the changes suggested by commenters. In particular, EPA disagrees that the method detection limit (MDL) should be increased to 20 µg/L to allow for blank contamination. In EPA's view, blank contamination can be controlled to levels well below 20 µg/L. EPA also disagrees that it should eliminate Section 8.1.2 of the proposed method. (Section 8.1.2 contained provisions for flexibility.) EPA has received a large number of requests that analytical methods be ''performance-based,'' and has attempted to implement the means for allowing changes in Section 8.1.2 (Section 9.1.2 in the version of Method 1650 being promulgated today). Under Section 8.1.2, the laboratory can make minor modifications to Method 1650 provided that the laboratory performs all quality control (QC) tests and meets all QC acceptance criteria. In addition, contrary to a suggestion from a commenter, EPA has not included examples of cell maintenance in Method 1650 because EPA believes that analysts who maintain the coulometric cell must be familiar with the cell maintenance procedures provided by the instrument manufacturer. For more information on these issues, see DCN 14497, Vol. VII.

(2) Method 1653: Chlorophenolics by In-Situ Derivatization and Isotope Dilution GC/MS

Method 1653 can be used to measure chlorinated phenolic compounds in water and wastewater amenable to *in situ* acetylation, extraction, and determination by HRGC combined with low-resolution mass spectrometry (LRMS). In this method, chlorophenolics are derivatized *in situ* to form acetic acid phenolates that are extracted with hexane, concentrated, and injected into the HRGC/LRMS where separation and detection occurs.

EPA studies have demonstrated MDLs of 0.09–1.39 µg/L for chlorophenolics in water. Based on these MDLs and on calibration of the GCMS instrument, minimum levels have been determined for the 12 chlorinated phenolics in today's rule. These minimum levels of 2.5 or 5.0 µg/L depend on the specific compound and have been validated in single laboratory validation studies and by use in data gathering for today's final rule. All laboratories that used Method 1653 in the data gathering effort calibrated their instruments at the ML.

Since proposal, EPA has made changes to Method 1653 to improve the reliability of the method and to lower costs of measurements. These changes are incorporated into the version of the method being promulgated today; they largely reflect comments and suggestions made following proposal of the method.

In response to comments, EPA made several specific changes to Method 1653, the most significant of which are as follows: lowering the spike level of the labeled compounds to reduce interferences with trace levels of the analytes of interest and to lower the cost of labeled compounds; specifying more appropriate solvents for the analytical standards containing labeled and native analytes; requiring laboratories to add the labeled compounds to the sample prior to pH adjustment; restating the quality control acceptance criteria for recovery in terms of percent instead of concentration; and reducing method flexibility in certain critical areas. In addition, as with Method 1650, the method has been revised into the standardized EMMC format.

EPA disagreed with several comments on EPA's proposed Method 1653 and therefore did not make changes suggested by commenters. EPA received comments that Method 1653 has not been validated adequately. EPA disagrees. Method 1653 has been validated in multiple single-laboratory method validation studies and extensively validated in field studies for this final rule. EPA believes that these extensive studies are more than adequate to validate Method 1653 for use in data gathering to support this final rule and for use in monitoring under this final rule. EPA also disagrees with comments that Method 1653 is inadequate for chlorocatechols. EPA believes that Method 1653 provides more reliable data for catechols and the other chlorophenolics than any other method available, and the commenter provided no suggestions for how Method 1653 could be improved for determination of chlorocatechols. EPA has, therefore, kept chlorocatechols in Method 1653. EPA also disagrees with comments that initial precision and recovery (IPR) and ongoing precision and recovery (OPR) tests should be replaced with initial calibration (ICAL) and calibration verification (VER) tests. (The ICAL and IPR are different in both form and function. The calibration test is for calibrating the analytical system while the IPR test is conducted to check performance. The OPR and VER tests are the same; only the terminology is different. EPA has retained use of the OPR terminology to be consistent with other methods.) EPA also disagrees with comments that use of labeled compounds is not worth the benefit and that all phenols and guaiacols should be quantitated against 3,4,5-trichlorophenol. EPA believes that data gathered to support today's final rule and in other studies demonstrate that isotope dilution provides the most precise and accurate measurement of chlorophenolics and other compounds determined by gas chromatography/mass spectrometry. EPA also received comments urging EPA not to allow modifications to the method. However, EPA also received a large number of requests that analytical methods be ''performance-based,'' and has attempted to implement the means for allowing changes to improve detection and quantitation or to lower costs of measurements. Limited changes may be made, except where specifically prohibited in Method 1653, provided that the performance tests are repeated and the results produced by the change are equivalent or superior to results produced with the unmodified method. EPA has also decided to retain the mention of field duplicates in the method in the event that a laboratory or discharger desires to measure sampling precision. Finally, EPA has not added the requirement that laboratories should be forced to overcome emulsions. EPA believes that nearly all emulsions can be overcome and provides specific steps in

the method that the laboratory must take to break the emulsion. However, EPA does not wish to impose such a requirement on laboratories in the event that a future sample is encountered that produces an emulsion that cannot be broken. If all efforts to break the emulsion fail, Method 1653 allows the use of a dilute aliquot. For more discussion, see Comment Response Document, Vol. VII, DCN 14497.

d. Other Methods. In addition to the methods promulgated today, the effluent limitations guidelines and standards also call for the use of Method 1613 (for 2,3,7,8-tetrachlorodibenzo-p-dioxin (TCDD) and 2,3,7,8-tetrachlorodibenzofuran (TCDF)) and any of the approved methods for chloroform to monitor compliance. These methods are discussed below.

(1) Method 1613: CDDs and CDFs by HRGC/HRMS

Method 1613 uses isotope dilution and high-resolution gas chromatography combined with high-resolution mass spectrometry (HRGC/HRMS) for separation and detection of 17 tetra- through octa-substituted dibenzo-p-dioxin and dibenzofuran isomers and congeners that are chlorinated at the 2, 3, 7, and 8 positions. Separate procedures are available for the determination of these analytes in water and solid matrices. In the procedure, a 1–L sample is passed through a 0.45-µ glass fiber filter. The filter is extracted with toluene in a Soxhlet/Dean-Stark (SDS) extractor. The aqueous filtrate is extracted with methylene chloride in a separatory funnel. Extracts from the SDS and separatory funnel extractions are combined and concentrated. To remove interferences, the combined, concentrated extract is cleaned up using various combinations of acid and base washes, acidic and basic silica gel, gel permeation chromatography (GPC), high-performance liquid chromatography (HPLC), and activated carbon. The cleaned up extract is concentrated to 20 µL and a 1–2 µL aliquot is injected into the HRGC/HRMS.

The MDL determined for TCDD is 4.4 part-per-quadrillion (ppq). Minimum levels for Method 1613 are 10 ppq for TCDD and TCDF. These MLs have been validated through an interlaboratory study and by use in the analysis of mill effluents.

EPA recently promulgated Method 1613 for the determination of CDDs and CDFs at 40 CFR 136, Appendix A in a final rule published on September 15, 1997 (62 FR 48394). Of the 17 congeners that may be measured with this method, only TCDD and TCDF are regulated under this final rule. Method 1613 was first proposed for general use in compliance monitoring and for other purposes at 40 CFR part 136 on February 7, 1991 (56 FR 5090) and was proposed for use in pulp and paper industry wastewaters at 40 CFR part 430 on December 17, 1993 (58 FR 66078). EPA received extensive comments and suggestions on both proposals of Method 1613; in several cases, the same set of comments was submitted. EPA updated the final Method 1613 based on suggestions and comments received on the original proposal (56 FR 5090) and on the proposal of Method 1613 for use at 40 CFR part 430 (58 FR 66078). In the docket supporting promulgation of Method 1613, EPA provided a listing of detailed comments received on both proposals of Method 1613, along with detailed responses to all of those comments. Because Method 1613 was promulgated in a final rule prior to promulgation of today's final rule, and because EPA received comments and provided responses in support of that final rule, EPA is not promulgating Method 1613 as part of today's final rule. See the final rule promulgating Method 1613 (62 FR 48394) for all information concerning that method.

(2) Method 1624: Volatiles by Purge-and-Trap and Isotope Dilution GC/MS

Method 1624 is used for the determination of volatile pollutants in water and wastewater. It employs a gas chromatograph coupled to a mass spectrometer (GC/MS) to separate and quantify volatile pollutants. Detected pollutants are quantified by isotope dilution. Samples of water or solids suspended in water are purged of volatile organic pollutants by a stream of inert gas into the gaseous phase where they are concentrated onto a trap. Subsequent heating of the trap introduces the concentrated volatile organics into a GC/MS for separation and quantification.

With no interferences present, minimum levels of 10–50 µg/L can be achieved, depending on the specific pollutant. For chloroform, the minimum level is 10 µg/L. This minimum level has been validated by use.

When EPA initially proposed today's rule, it proposed to regulate four volatile organic pollutants. Method 1624, Revision C was proposed for monitoring the presence of these pollutants in effluent discharges. Revision C contained updates and improvements to Method 1624, Revision B, which was promulgated October 26, 1984 (49 FR 43234).

In today's final rule, EPA is regulating only one of the originally proposed volatile pollutants (chloroform); this pollutant can be measured by already-approved EPA Methods 601, 624, and 1624B and Standard Methods 6210B and 6230B. Therefore, EPA has not included Method 1624C in today's final rule and has not formally addressed comments concerning Method 1624C. EPA will consider comments on Method 1624C when this version of the method is promulgated for general use at 40 CFR 136 or when the method is further revised.

(3) Other Issues Concerning Analytical Methods Promulgated in Today's Final Rule

The overall comments received from the regulated industry and others provide suggestions for method improvement but, in some cases, question EPA's approach to technical issues in the methods and the handling of data. For example, commenters suggested that quality control tests be performed at the minimum level (ML), that a 3-point calibration should be used for labeled compounds in isotope dilution methods, and that additional QC tests should be required. Commenters also stated that all methods must be subjected to interlaboratory validation, and that the compliance monitoring detection limit (CMDL) and compliance monitoring quantitation limit (CMQL) should be used in place of EPA's method detection limit (MDL) and ML, respectively. EPA responded to these suggestions by providing specific reasons why they are inconsistent with the provisions in other methods, are more extensive than required to assure reliable results, or that they would not substantively alter the conclusions of studies and data gathering used to support this final rule. The detailed responses to these issues are in the record for this rule.

5. Bleached Papergrade Kraft and Soda Subcategory

a. BAT. (1) Technology Options Considered.

(a) Options Proposed. The Agency considered many combinations of pollution prevention technologies as regulatory options to reduce the discharge of toxic and nonconventional pollutants from bleached papergrade kraft and soda mills. These options are discussed in the proposal and the Notice of Availability published on July 15, 1996. See 58 FR at 66109–11 and 61 FR at 36838–39, 36848. Five different options were presented in the proposal.

The Agency proposed BAT effluent limitations guidelines based on an option that included the use of oxygen delignification or extended cooking

with elimination of hypochlorite and complete (100 percent) substitution of chlorine dioxide for elemental chlorine as the key process technologies. Complete substitution of chlorine dioxide for elemental chlorine and elimination of hypochlorite is known as elemental chlorine-free (ECF) bleaching. EPA's definition of ECF bleaching includes high shear mixing to ensure adequate mixing of pulp and bleaching chemicals, as well as other technology elements.

EPA proposed this option because it believed, based on the record at the time, that this combination of technologies was both available and economically achievable and that no other available and economically achievable option resulted in greater effluent reductions. See 58 FR at 66110. In the July 1996 Notice, EPA identified this technology option as Option B. See 61 FR at 36838.

EPA also considered at proposal another option based on conventional pulping—complete substitution of chlorine dioxide for elemental chlorine, but without the use of oxygen delignification or extended cooking (i.e., conventional pulping). See 58 FR at 66111. At the time of proposal, EPA was unable to fully analyze this alternative because very limited performance data were available from mills using this technology. Therefore, EPA solicited further data and comments on this option, Id. In the July 1996 Notice, EPA published preliminary findings regarding this option, which it identified as Option A. See 61 FR at 36838–42.

The Agency also considered a totally chlorine-free (TCF) option for the Bleached Papergrade Kraft and Soda subcategory at proposal. See 58 FR at 66109. TCF bleaching processes are pulp bleaching operations that are performed without the use of chlorine, sodium hypochlorite, calcium hypochlorite, chlorine dioxide, chlorine monoxide, or any other chlorine-containing compound. EPA concluded that TCF was not an available pollution prevention technology at the time of proposal because of limited worldwide experience with this process and a lack of data for TCF bleaching of softwood to full market brightness. To encourage continuing innovation in the development of processes to reduce or eliminate the discharge of pollutants from the Bleached Papergrade Kraft and Soda subcategory, however, EPA proposed alternative BAT limits for mills adopting TCF processes.

In the July 1996 Notice, EPA also described an incentives program that it was considering for Subpart B mills in order to promote more widespread use of advanced pollution prevention technologies. See 61 FR at 36849–58. As part of this voluntary program, EPA proposed to establish up to three sets of alternative BAT limitations that would complement the compulsory baseline BAT requirements. EPA identified the proposed alternative BAT limitations as Tier I, Tier II, and Tier III BAT limitations. See 61 FR at 36850. EPA considered basing Tier I limits on BAT Option B technology (if Option A were chosen as the basis for the baseline BAT limitations). The Tier II and Tier III limitations, in turn, would be based on technologies and processes that EPA expected to achieve substantial reductions in pulping area condensate, evaporator condensate, and bleach plant wastewater flow.

(b) Final ECF Options Evaluated. For this final rule, EPA considered two ECF technology options—Option A and Option B—as the basis for BAT effluent limitations. Option A consists of conventional pulping followed by complete substitution of chlorine dioxide for elemental chlorine, as well as the following nine elements:

(i) Adequate chip thickness control;

(ii) Closed brownstock pulp screen room operation, such that screening filtrates are returned to the recovery cycle;

(iii) Use of dioxin- and furan-precursor-free defoamers (i.e., water-based defoamers or defoamers made with precursor-free oils);

(iv) Effective brownstock washing, i.e., washing that achieves a soda loss of less than or equal to 10 kg Na_2SO_4 per ADMT of pulp (equivalent to approximately 99 percent recovery of pulping chemicals from the pulp);

(v) Elimination of hypochlorite, i.e., replacement of hypochlorite with equivalent bleaching power in the form of additions of peroxide and/or oxygen to the first extraction stage and/or additional chlorine dioxide in final brightening stages;

(vi) Oxygen- and peroxide-enhanced extraction, which allows elimination of hypochlorite and/or use of a lower kappa factor in the first bleaching stage;

(vii) Use of strategies to minimize kappa factor and dioxin- and furan-precursors in brownstock pulp;

(viii) High shear mixing during bleaching to ensure adequate mixing of pulp and bleaching chemicals; and

(ix) Efficient biological wastewater treatment, achieving removal of approximately 90 percent or more of influent BOD_5. These elements are discussed in detail in the Supplemental Technical Development Document, DCN 14487. Option B is identical to Option A, with the addition of extended delignification (oxygen delignification and/or extended cooking). EPA also considered a TCF option, see subsection (c) immediately below, and, in the context of the Voluntary Advanced Technology Incentives Program, three sets of voluntary alternative BAT limitations. See Section IX.A.

In a slight change from the definition of the proposed BAT option, EPA has defined Option B not only in terms of the presence of extended delignification technology (i.e., oxygen delignification or extended cooking) but also by the pre-bleaching kappa number achieved by extended delignification. Kappa number is the measure of lignin content in unbleached pulp and is commonly used by the industry. Many researchers have shown (and EPA has confirmed) strong correlations between the kappa number of the pulp entering the first stage of bleaching and the bleach plant effluent loads of AOX and COD. See DCN 14497, Vol. I. EPA concluded that merely employing extended delignification technologies, without reducing the unbleached pulp kappa number, is not sufficient to achieve the low effluent loadings of AOX and COD characteristic of Option B. Therefore, EPA has redefined Option B as ECF with extended delignification resulting in a kappa number at or below 20 for softwoods and below 13 for hardwoods (see the Supplemental Technical Development Document, DCN 14487). EPA found that these kappa numbers are achievable by virtually all mills that currently have installed and are effectively operating extended delignification technology.

As part of the nine elements common to both Option A and Option B, EPA has included strategies for minimizing kappa factor and dioxin- and furan-precursors in brownstock pulp. These strategies are part of Options A and B because EPA has determined that they minimize the generation of dioxin, furan, and AOX and, hence, are part of the model process sequence to achieve those limitations. See 61 FR at 36848 and the Supplemental Technical Development Document, DCN 14487.

Kappa factor, also known as active chlorine multiple, is the ratio of chlorine bleaching power to the pulp kappa number. (The kappa factor is different from the kappa number discussed above.) The kappa factor used on a particular bleach line depends on the fiber furnish, final product specifications, pre-bleaching processes employed, and optimization of bleaching costs. At the mills whose data were used to characterize Option A performance, kappa factors for softwood

furnish averaged 0.17 and all were less than 0.2. At the mills whose data were used to characterize Option B performance, kappa factors for softwood furnish averaged 0.23, with all but one at less than 0.21. Well-operated and maintained mills using comparable kappa factors will be capable of achieving limitations corresponding to Option A or B, respectively. Based on certain site-specific factors, such as furnish, some mills will be capable of achieving today's limitations with higher kappa factors. There are numerous strategies a mill can employ to minimize its kappa factor. See the Supplemental Technical Development Document, DCN 14487.

In addition, there are numerous strategies a mill can employ to minimize precursors of dioxin and furan contained in brownstock pulp. These strategies include, but are not limited to, improved brownstock washing, improved screening to produce cleaner pulp, eliminating compression wood (knots) from brownstock pulp, and using only precursor-free condensates in brownstock washers. The strategy or strategies appropriate for the production of a given pulp depend on the raw material (wood species and the form it takes, i.e., chips, waste wood, or sawdust), process equipment, and the specifications of the final pulp product (brightness, cleanliness, strength, absorbency, and others). For a discussion of these strategies, see the Supplemental Technical Development Document, DCN 14487.

(c) Totally Chlorine-Free (TCF) Bleaching Option Evaluated. The Agency received many comments that it should continue to investigate TCF bleaching because dioxin and furan are not generated at any level with TCF bleaching, thus assuring that these pollutants are not released to the environment. The Agency conducted two sampling programs at the one U.S. mill that produces TCF bleached kraft softwood pulp. EPA collected samples of bleach plant filtrates but could not collect samples of treated effluent because the mill does not employ secondary treatment. The Agency also conducted a sampling program at a Nordic mill that produces hardwood and softwood kraft pulp on two bleach lines that alternate between ECF and TCF bleaching. Samples collected at this mill could not be used to characterize treated TCF bleaching effluents because they are combined with ECF bleaching effluents for treatment.

Both of the sampled TCF softwood fiber lines employed oxygen delignification followed by multiple stages of peroxide bleaching. The Nordic mill also uses extended cooking, and was able to reduce the lignin content of unbleached pulp to a very low kappa number of four. At the time of sampling, this mill bleached pulp to a brightness of 83 ISO. The U.S. mill's unbleached pulp kappa number was between seven and ten. Bleached pulp brightness was approximately 79 during the first sampling episode at the U.S. mill, but by the time of the second sampling episode, the mill had improved its process to achieve a pulp brightness of 83 ISO.

At both mills, chloroform or chlorinated phenolic pollutants were not detected in samples collected by EPA. At the U.S. mill, dioxin, furan, and AOX were not detected above the analytical minimum level during sampling fully representative of TCF operations. The average bleach plant AOX loading measured by EPA at the Nordic mill was 0.002 kg/ADMT (compared to a long-term average of 0.51 kg/ADMT for Option A). EPA's dioxin sampling results for the Nordic mill were surprising. Dioxin was detected at a concentration just above the minimum level in one sample of combined bleach plant filtrate, when the mill was bleaching without the use of chlorine or any chlorinated compounds. Furan was not detected. EPA believes the dioxin results were unique to the operation of this mill and does not conclude that TCF bleaching generates dioxin.

Neither of the two sampled mills produced softwood pulp at full market brightness. In the last three years, however, several non-U.S. mills have reported the production of TCF softwood kraft pulp at full market brightness. EPA's data are insufficient to confirm that TCF processes are technically available for the full range of market products currently served by ECF processes. See DCN 14497, Vol. I. Further, EPA's data are insufficient to define a segment of the Bleached Papergrade Kraft and Soda subcategory where TCF processing is known to be technically feasible and thus could be the basis of compulsory BAT limitations. Despite these impediments, EPA believes that the progress being made in TCF process development is substantial, and that additional data may demonstrate that TCF processes are indeed available for the full range of market products. For this reason, EPA also evaluated the performance of TCF mills in order to establish alternative limitations for mills that voluntarily choose to employ TCF processes. See Section VI.B.5.a(4).

(2) Costs of Technology Options Considered. The Agency estimated the cost for the Bleached Papergrade Kraft and Soda subcategory to achieve each of the technology options considered today. These estimated costs are summarized in this section and are discussed in more detail in several technical support documents. (See the BAT Cost Model Support Document, DCN 13953; Memorandum: Costing Revisions Made Since Publication of July 15, 1996 Notice of Data Availability, DCN 14493; Supplemental Technical Development Document, DCN 14487; Analysis of Impacts of BAT Options on the Kraft Recovery Cycle, DCN 14490; Effect of Oxygen Delignification on Yield of the Bleached Papergrade Kraft Pulp Manufacturing Process, DCN 14491; and the Technical Support Document for Best Management Practices for Spent Pulping Liquors Management, Spill Prevention, and Control, DCN 14489.) (For a discussion of the costs associated with the Voluntary Advanced Technology Incentives Program BAT technologies, see the Technical Support Document, DCN 14488.) All cost estimates in this section are expressed in 1995 dollars. The cost components reported in this section are engineering estimates of the cost of purchasing and installing equipment and the annual operating and maintenance costs associated with that equipment. See Section VIII of this preamble for a discussion of the costs used in the economic impact analysis.

Because EPA considers efficient biological wastewater treatment to be current industry practice, EPA has not included its costs in the estimates of costs of BAT. See the Supplemental Technical Development Document, DCN 14487. As discussed in Section VI.B.5.c. below, for PSES for the Bleached Papergrade Kraft and Soda subcategory, EPA evaluated the same process change technology options that it evaluated for BAT, with the exception of biological wastewater treatment. As a result, EPA used the same cost model to estimate the costs of PSES and BAT. Set forth below are the total costs for all mills in the subcategory (direct and indirect dischargers) to complete the process changes that are the technology bases for the options considered for BAT and PSES. The costs of complying with today's BMP requirements are also included.

(i) Additional Data Gathering and Analysis Since Proposal. EPA updated its database of mill process information by reviewing comments on the proposed rule and the July 15, 1996 Notice, by examining information from publicly available sources as well as information gathered by AF&PA and NCASI, and by contacting mills directly. The Agency revised the cost estimates it made at

proposal in many ways but retained two major assumptions: (1) Mills would continue to make the same quantities and grades of pulp; and (2) mills already using the technology bases for the BAT technology options generally would incur only monitoring costs to comply with regulations based on those options. See the Supplemental Technical Development Document, DCN 14487.

EPA received comments that it severely underestimated the costs of its proposed option (now identified as Option B). Commenters contended that this underestimate derived in large part from EPA's underestimate of the increase in load of black liquor solids that will be routed to the recovery system after installation of oxygen delignification, closing screen rooms, improving brownstock washing, and recovering additional pulping liquors through a best management practices (BMP) program. In addition to underestimating the increase in load, commenters claimed that EPA also underestimated the costs for recovery boilers to accommodate the increased load. Commenters asserted that most mills are recovery boiler-limited and, to employ the proposed BAT, would have to install new recovery boilers at a very high cost.

In response to these and other comments on the proposed rule, EPA and NCASI undertook several data gathering efforts aimed specifically at obtaining information to improve EPA's cost estimates. In late 1994, NCASI distributed a survey to collect information about recovery furnace capacity and a second survey about the implementation and cost of pulping liquor spill prevention and control programs (i.e., BMPs).

Based on this and other information, EPA concluded that there is no foreseeable set of circumstances where implementation of either Option A or B would force a mill to replace or even rebuild an existing recovery boiler. Therefore, EPA strongly disagrees with comments that it severely underestimated the costs of what is now known as Option B. Based on data reported in the NCASI survey, almost 60 percent of the recovery boilers operated by the industry have sufficient capacity to accommodate the increased loads that would result from implementing either Option A or B, in combination with the BMP program promulgated today. At most of the remaining 40 percent of the recovery boilers, any increased thermal load can be accommodated through improved boiler operation requiring no capital expenditures, by increasing pulp yield by using anthraquinone, or by reducing the caloric value of the black liquor burned in the boiler by using oxygen-black liquor oxidation. EPA estimates that only one boiler operated by a bleached papergrade kraft and soda mill would need to be upgraded regardless which option is selected as the technology basis for today's rule. The cost of the upgrade is small in comparison to the cost of building or replacing a boiler. See the Supplemental Technical Development Document, DCN 14487, and Analysis of Impacts of BAT Options on the Kraft Recovery Cycle, DCN 14490.

For the purposes of estimating the costs of Option B, EPA estimated costs for implementation of oxygen delignification (OD) based on the record as a whole that shows that OD does not have an impact on yield of bleached pulp. Although some stakeholders asserted that EPA's yield estimates were in error, the entire record on yield supports EPA's basis for estimating the cost of BAT Option B. Some commenters asserted that EPA overestimated the costs for Option B presented in the July 1996 Notice by failing to account for the increase in yield that would result from implementation of OD. Industry commenters asserted that OD would result in reduced bleached pulp yields. In response to these comments, EPA reviewed all available literature reports and contacted companies operating mills with OD systems. Although some laboratory and modeling analyses indicate that OD following a modified kraft cooking could increase yields by one to two percent, EPA found no documentation that full-scale OD systems are being operated in this manner. One of the two U.S. companies that operate more mills with OD systems than any other has found no statistical difference in yield measured at the end of the bleach plant with the installation of OD. The other company offered no specific data on yield, but has seen no substantial impact on recovery boilers, indicating that no appreciable change in yield has been experienced. See DCN 14491.

EPA also collected additional information about the costs of process equipment and updated its information about the costs of chemicals, wood, energy, and labor (record sections 21.1.2 to 21.1.6). EPA used this information to revise the cost model spreadsheet. See the Memorandum: Costing Revisions Made Since Publication of July 15, 1996 Notice of Data Availability, DCN 14493, and BAT Cost Model Support Document, DCN 13953. These changes are discussed immediately below.

(ii) Major Changes Since Proposal. Among other changes since proposal, EPA's cost estimates for Option B now include the costs for new or incremental increases in OD systems for mills unable to achieve the kappa numbers used to characterize the Option B technology. In its July 1996 Notice, EPA described this change and additional changes to the cost model. See 61 FR at 36840–41 and BAT Cost Model Support Document, DCN 13953.

In response to comments on the July 1996 Notice, EPA corrected mill-specific information and made additional changes to the cost model. See the Memorandum: Costing Revisions Made Since Publication of July 15, 1996 Notice of Availability, DCN 14493. Among those changes was a correction of errors in the costs of caustic and hydrogen peroxide that resulted from a unit conversion error (this error carried through the proposal and the Notice cost estimates). As a result of the changes, including the correction made to the cost of caustic and hydrogen peroxide, the net engineering operating and maintenance (O&M) costs for Option B for all mills in the Bleached Papergrade Kraft and Soda subcategory increased from the savings of $7 million/year presented in the July 1996 Notice, to the $2 million/year increased costs estimated today. See the Supplemental Technical Development Document, DCN 14487.

For the purpose of estimating the cost of the regulations, EPA excluded the costs of process changes that were either completed or under construction as of mid-1995. EPA incorrectly stated in the July 1996 Notice that costs for process changes committed to but not yet under construction as of mid-1995 were also excluded from the cost of this regulation. These latter costs have been included. See the Supplemental Technical Development Document, DCN 14487.

(iii) Final Cost Estimates of the Options Considered. EPA's final cost estimates for Option A and B for the Bleached Papergrade Kraft and Soda subcategory (BAT, PSES, and BMPs) follow in Table VI–1.

TABLE VI–1.—TOTAL BLEACHED PAPERGRADE KRAFT AND SODA SUBCATEGORY CAPITAL AND ENGINEERING O&M COSTS FOR BAT, PSES AND BMPS

[1995 dollars]

	Final cost estimates	
	Option A	Option B
Capital ($ million)	966	2,130

TABLE VI–1.—TOTAL BLEACHED PAPERGRADE KRAFT AND SODA SUBCATEGORY CAPITAL AND ENGINEERING O&M COSTS FOR BAT, PSES AND BMPS—Continued

[1995 dollars]

	Final cost estimates	
	Option A	Option B
Engineering O&M ($ million/yr)	113	2.02

For both Option A and Option B, EPA excluded costs for the use of dioxin- and furan-precursor-free defoamers, adequate wood chip size control, and efficient biological wastewater treatment in its estimates of the costs of the final BAT technology options. These processes represent current industry practice. See the Supplemental Technical Development Document, DCN 14487. However, EPA's estimate of the costs of BAT also includes a general allowance for increased technical supervision and process engineering that could be used, in part, to design and implement a chip quality control program or to improve operation of existing biological wastewater treatment. In addition, any mill not currently using dioxin- and furan-precursor-free defoamers can use them without incurring significant costs. See the Supplemental Technical Development Document, DCN 14487. EPA evaluated the costs of retrofitting U.S. bleached papergrade kraft and soda mills to TCF bleaching to provide perspective on the likelihood of TCF processes being found to be economically achievable once they are shown to be technically available. EPA investigated the costs of two TCF bleach sequences. These bleach sequences included all common elements that are part of Option A and Option B (adequate chip thickness control, closed brownstock pulp screen room operation, use of dioxin- and furan-precursor-free defoamers, effective brownstock washing, elimination of hypochlorite, oxygen- and peroxide-enhanced extraction, use of strategies to minimize kappa factor and dioxin- and furan-precursors in brown stock pulp, high-shear mixing during bleaching, and efficient biological wastewater treatment). The bleaching sequences also include medium-consistency oxygen delignification. One TCF bleach sequence was based on peroxide bleaching (OQPP) and the other was based on ozone and peroxide bleaching ($OZE_{op}QPZP$). EPA's final cost estimates for TCF bleach sequences for the total Bleached Papergrade Kraft and Soda subcategory (BAT, PSES, and BMPs) are as follows. See the Supplemental Technical Development Document, DCN 14487.

TABLE VI–2.—TOTAL BLEACHED PAPERGRADE KRAFT AND SODA SUBCATEGORY CAPITAL AND ENGINEERING O&M COSTS OF TCF OPTIONS FOR BAT, PSES, AND BMP

[1995 dollars]

	Estimated costs	
	Peroxide-TCF (OQPP)	Ozone-TCF ($OZE_{op}QPZP$)
Capital ($ million)	3,090	5,630
Engineering O&M ($million/yr)	660	849

(3) Effluent Reductions Associated with Technology Options Considered. The Agency estimated the effluent reductions for the Bleached Papergrade Kraft and Soda subcategory that will result from the BAT options it analyzed. These estimated reductions are summarized in this section and are discussed in more detail in the Supplemental Technical Development Document, DCN 14487.

As discussed in the July 1996 Notice, EPA recalculated the effluent reduction benefits using a new baseline of mid-1995. See 61 FR at 36840. In addition, EPA revised and simplified the methodology used to estimate that baseline (using a model mill approach). Id. EPA also used a second approach to estimate the effluent loads of dioxin and furan using data for individual mills as compiled in the NCASI 1994 Dioxin Profile (see DCN 13764). The baseline calculation methodology revisions, along with details of the effluent reduction calculations, are described in record section 22.6.

As explained in DCN 14487, after July 1996, EPA again recalculated the effluent reductions. The baseline remains mid-1995. As before, EPA used one-half of the minimum level specified in 40 CFR 430.01(i) or one-half of the reported detection limits to estimate effluent discharge loadings when pollutant concentrations were below minimum levels. EPA considers this a reasonable approach for estimating mass loads because the actual concentration of the sample is too small to measure by current analytical methods, but is between zero and the detection limit. Furthermore, ECF processes use and generate chlorinated compounds, so EPA expects that chlorinated compounds were present (i.e., with a concentration value greater than zero) in the samples. Thus, EPA believes that it is appropriate to substitute a value at the midpoint between zero and the detection limit (i.e., the upper bound of the concentration in the sample) for ECF mills. The methodology was modified slightly for mills that use TCF bleaching sequences. Because chlorinated compounds are not used and are not generated by TCF processes, EPA assumed that TCF mills would discharge zero kilograms per year of AOX and the individual chlorinated pollutants rather than an amount equivalent to one-half the minimum level or detection limit multiplied by an appropriate production-normalized flow rate.

EPA's revised baselines, which were again found to be comparable to NCASI's industry-wide estimates for dioxin and furan, were used to calculate effluent reductions summarized in Table VI–3. The table shows the estimated baseline and the reduction from baseline expected if the option were implemented by all the existing direct discharging mills in the subcategory (i.e., those mills to which BAT will apply). The slightly greater removals of the bleach plant pollutants by Option B are a result of the reduced bleach plant flow found at mills employing Option B technology.

TABLE VI–3.—BASELINE DISCHARGES AND ESTIMATED REDUCTIONS OF POLLUTANTS FOR BLEACHED PAPERGRADE KRAFT AND SODA MILLS COMPLYING WITH BAT TECHNOLOGY OPTIONS CONSIDERED [a]

Pollutant parameter	Units	Mid-1995 baseline discharge	Estimated reductions: option A	Estimated reductions: option B	Estimated reductions: TCF
2,3,7,8–TCDD	g/yr	14.0	9.88	10.8	14.0
2,3,7,8–TCDF	g/yr	105	98.0	99.5	105
Chloroform	kkg/yr	43.6	35.5	35.5	43.6

TABLE VI–3.—BASELINE DISCHARGES AND ESTIMATED REDUCTIONS OF POLLUTANTS FOR BLEACHED PAPERGRADE KRAFT AND SODA MILLS COMPLYING WITH BAT TECHNOLOGY OPTIONS CONSIDERED [a]—Continued

Pollutant parameter	Units	Mid-1995 baseline discharge	Estimated reductions: option A	Estimated reductions: option B	Estimated reductions: TCF
12 Chlorinated phenolic pollutants	kkg/yr	51.7	42.3	44.1	51.7
AOX	kkg/yr	33,300	22,100	27,900	33,300

[a] The TCF calculations assumed that chlorinated pollutants will not be present. For all other calculations, EPA assumed that pollutants reported as ''not detected'' were present in a concentration equivalent to one-half the minimum level specified in 40 CFR 430.01(i) or one-half of the reported detection limit.

The effluent reductions described and shown above are used in Section VII to estimate reduced human health and environmental risk attributable to today's rules. These estimates also form the basis for estimating monetized benefits in Section VIII.

(4) Development of Limitations. The proposed BAT regulations included limitations for dioxin, furan, 12 chlorinated phenolic pollutants, acetone, chloroform, methyl ethyl ketone (MEK), and methylene chloride (based on BAT process changes); and limitations for color, COD, and AOX (based on BAT process changes and biological wastewater treatment). In today's rule, EPA is promulgating limitations for dioxin, furan, 12 chlorinated phenolic pollutants, chloroform, and AOX. See 40 CFR 430.24(a)(1). As discussed in Section VI.B.3. above, EPA is not promulgating limitations for acetone, MEK, methylene chloride, or color. EPA intends to promulgate effluent limitations guidelines and standards for COD in a later rulemaking.

In addition to the new effluent limitations guidelines and standards for the Bleached Papergrade Kraft and Soda subcategory promulgated today and discussed immediately below, mills in this subcategory continue to be subject to existing limitations and standards for pentachlorophenol and trichlorophenol (now denominated as supplemental limitations and standards). These mills continue to have the opportunity to be exempt from these supplemental limitations and standards if they certify to the permitting or pretreatment authority that they are not using these chemicals as biocides. See 40 CFR 430.24(d).

Except where noted, the following discussion of BAT limitations also applies to EPA's procedures for setting NSPS, PSES, and PSNS for Subpart B.

(a) Performance Data. EPA revised the proposed limitations and standards based on data collected after proposal (see Pulp and Paper Mill Data Available for BAT Limitations Development, DCN 13951) and presented the revisions in the July 1996 Notice. See 61 FR at 36841–42. Today's TCDF, chloroform, and AOX limitations and standards have been further revised since the July 1996 Notice as a result of the selection of data sets used for the long-term averages, variability factors, and limitations. See DCN 14494, 14496, and Record Section 22.5. The rationale for changes in the data set selections is provided immediately below. See DCN 14487.

(i) Dioxin, Furan, and Chlorinated Phenolic Pollutants. For non-TCF mills, EPA had proposed mass-based limitations and standards for furan; in July 1996, EPA presented preliminary revised limitations and standards that were concentration-based. EPA has determined that a limitation on the concentration of furan is a more direct, and hence, a more reasonable measurement of the presence of furan than a mass-based limitation would be. When detected, furan typically is present in the effluent of Subpart B mills that use ECF bleaching at levels at or only slightly above the minimum level specified in the applicable analytical method. In this case, the value of mass-based limitations and standards are predominantly influenced by the variability in the bleach plant effluent flow rate and thus may not be a consistent and reliable measurement of the presence of furan. Since the July 1996 Notice, EPA has used one additional data set to calculate the furan limitation; this data set was from an Option B bleach line with a typical unbleached kappa number of 20. Because of this change and because of changes to assumptions used in the statistical analysis and changes to the computer programs, see Section VI.B.5.a(4)(b), the value of the furan limitations and standards has changed slightly from that presented in the July 1996 Notice.

EPA has made no changes to the limitations for dioxin and the 12 chlorinated phenolic pollutants presented in the July 1996 Notice. Upon further review after the July 1996 Notice, EPA discovered that some sample-specific minimum levels for some chlorinated phenolic pollutants were incorrectly entered into the databases. These values have been corrected. See DCN 14496, and Record Section 22.5.

EPA has determined that TCF bleaching processes do not result in the generation of dioxin, furan, chloroform or chlorinated phenolic pollutants. For this reason, EPA is not setting limitations for these pollutants as part of the voluntary alternative BAT limitations and standards promulgated today for mills that certify to the use of TCF bleaching processes. See 40 CFR 430.24(a)(2).

(ii) AOX. In the July 1996 Notice, EPA presented preliminary revised AOX BAT limitations and NSPS for non-TCF mills.

In the July 1996 Notice, EPA indicated that although it was presenting revised limitations and standards it would continue to analyze data from two mills representing the performance of BAT Option A. These data were submitted to EPA by the industry without sufficient time for the results to be reflected in the preliminary limitations and standards presented in the July 1996 Notice.

Commenters encouraged EPA to use the newly acquired data for the two Option A mills, but also questioned why certain other data in the record were not used to develop the preliminary revised AOX limitations and standards. EPA continued its analysis of the new data and obtained new information about mill operations associated with the other data addressed by comments. As a result, EPA added data from the two Option A mills to the data used to characterize the performance of Option A and added data from two other mills to the data used to characterize the performance of Option B. EPA ultimately used data from six mills to develop the AOX limitations for each option, including at least one mill for each option for which long-term monitoring data (for about one and a half years) were available. The mills used to represent each option pulp

primarily softwood and most of them subsequently bleach the pulp to high brightness (i.e., greater than 88 ISO). Tables presented in DCN 14494 show several statistics for each mill (reflecting the mill characteristics during the sampling period), including furnish, kappa number, kappa factor, brightness, type of wastewater treatment system, and approximate AOX removal in the treatment system. For a discussion of EPA's development of pretreatment standards for AOX, see section VI.B.5.c(6).

Another factor that has contributed to revisions in today's AOX limitations and standards is the adjustment for autocorrelation in the data. See DCN 14496. EPA intended that this adjustment be made to the preliminary AOX limitations presented in the July 1996 Notice; however, comments on that notice stated correctly that this adjustment had been excluded from the calculations. This oversight has been corrected in the calculations of today's final AOX limitations and NSPS.

Since proposal, EPA has gathered additional data in order to establish a final limitation for AOX for TCF bleaching processes. See 40 CFR 430.24(a)(2). EPA sampled at two mills with TCF bleaching processes, one U.S. mill and one European mill. Analytical data from sampling these two mills during periods representative of TCF processes indicate that AOX concentrations were consistently below minimum levels in bleach plant wastewaters. See DCN 14494 and DCN 14488. Therefore, EPA has concluded that TCF bleaching processes are capable of achieving concentrations less than the minimum level for AOX in process wastewaters, whether measured at the bleach plant or after secondary biological treatment, and is setting AOX limitations and standards accordingly for TCF bleaching processes. See 40 CFR 430.24(a)(2).

(iii) Chloroform. EPA proposed a monthly average chloroform limitation of 2.01 g/kkg based on sampling results from one mill that used extended delignification and complete substitution of chlorine dioxide for elemental chlorine, and that did not use hypochlorite during bleaching. Data collected by EPA after proposal indicated that bleach plant loads of chloroform did not differ between mills that used conventional pulping (Option A) and extended delignification (Option B), as long as bleaching was carried out without elemental chlorine or hypochlorite. However, these data indicate that the type of pulp washers used in a mill's bleach plant influence the partitioning of chloroform between the air and effluent. Use of low air flow washers results in less emission of chloroform to the air and greater loads of chloroform in bleach plant effluent than use of high air flow washers. See DCN 14494. In general, modern low air flow washers (such as pressure diffusion) also use less water to accomplish equivalent washing, i.e., they are more efficient than conventional vacuum drum washers (high air flow washers). See DCN 14494, and DCN 14497, Vol. I. Because of their efficient use of water and their potential to reduce non-water quality environmental impacts, EPA encourages industry to use modern low air flow washers. For this reason, EPA developed revised chloroform limitations and standards using only data from mills that use low air flow washers. In the July 1996 Notice, EPA presented a revised bleach plant monthly average chloroform limitation of 2.80 g/kkg. This limitation was developed using data from four mills that did not use elemental chlorine or hypochlorite during bleaching, and that used low air flow bleach plant washers.

EPA received comments that the revised chloroform limitations and standards were not consistently achievable by mills with the process technologies serving as the basis for Options A and B. As a result of these comments, EPA re-evaluated the chloroform limitations and standards presented in the July 1996 Notice.

EPA has revised the long-term average and variability factors used to calculate the chloroform limitations and standards after considering data from five mills that did not use elemental chlorine or hypochlorite during bleaching and that used low air flow bleach plant washers (data from four of these mills were used in the July 1996 Notice). In developing the long-term average, EPA used data from two mills that bleach pulp to a high brightness (88 to 90 ISO). In developing the variability factors, EPA also considered data from the other three mills with low air flow washers to obtain a more realistic estimate of variability associated with operating low air flow washers. Two of these mills bleach pulp to a lower brightness (80 to 85 ISO). EPA believes that the resulting limitations and standards can be met by all well-operated and maintained ECF mills regardless of the type of bleach plant washers used. (EPA's revised bleach plant monthly average chloroform limitation is now 4.14 g/kkg.) The data in the record indicate that it is highly unlikely that a mill employing elemental chlorine or hypochlorite in its bleach plant could comply with the chloroform limitations promulgated in this rule. See DCN 14494.

(iv) COD. As discussed in VI.B.3.d., EPA is reserving limitations for COD at this time.

(b) Changes to Statistical Methodology. After the July 1996 Notice, EPA performed a detailed review of the results of the statistical analyses, the documentation of the statistical methodology, the computer programs, and the data for all of the limitations and standards. As a result of this review, EPA revised the assumptions regarding statistical analysis of data to ensure that long-term averages for TCDF and chloroform were greater than or equal to the minimum level of the analytical methods. EPA made other revisions to the statistical assumptions and the computer programs that resulted in minor changes to the values of the limitations and standards. All of these revisions are identified and described in the Statistical Support Document for the Pulp and Paper Industry: Subpart B, DCN 14496. In the record, EPA has also provided detailed responses to comments about the statistical methodology. See DCN 14497, Vol. VI.

(c) Definition of Limitations and Standards Expressed at Less Than the Minimum Level. In today's rulemaking, EPA is establishing limitations and standards for Subparts B and E for 12 chlorinated phenolic pollutants and dioxin that are expressed as less than the minimum level (''<ML''). (EPA is also expressing today's AOX limitations and standards for TCF processes as ''<ML.'') The limitations and standards hereafter are referred to as ''ML limitations.'' The ''ML'' is an abbreviation for the minimum level identified in § 430.01(i) of today's rule for the analytical methods that EPA used to determine the level of pollution reduction achievable through the use of BAT, NSPS, PSES and PSNS model technologies for the 12 chlorinated phenolic pollutants, dioxin, and, for alternative TCF technologies, AOX. (For Subpart E, limitations and standards for furan and AOX are also expressed as ''<ML''.) EPA intends for mills subject to ML limitations to have pollutant discharges with concentrations less than the minimum levels of the analytical methods specified today in 40 CFR 430.01(i).

In general terms, the ML is the level at which the analytical system gives recognizable signals and an acceptable calibration point. Method 1613 (used for dioxin and furan), Method 1650 (used for AOX), and Method 1653 (used for the chlorinated phenolic pollutants) provide precise definitions of the ML

relative to those analytes. See 40 CFR 430.01(i). In the proposal and the July 1996 Notice, EPA referred to the ML limitations as ''ND limitations.'' EPA has changed the terminology, but not the concept, in response to comments that the terminology was potentially misleading. This section provides a discussion of ML limitations. Compliance with the ML limitations is discussed in Section VI.B.8.c(2).

EPA expects that future analytical methods will be more sensitive than today's methods, and their minimum levels will have values that are less than those for the analytical methods identified today in § 430.01(i). However, the analytical methods (and their minimum levels) specified in § 430.01(i) were used to chemically analyze the wastewaters from mills with the BAT, NSPS, PSES, and PSNS model technologies selected today for Subparts B and E. EPA used the data from these chemical analyses to determine that today's ML limitations were technically and economically achievable. EPA is unable to determine, based on the data from these chemical analyses, whether more stringent limitations (that is, limitations with values or associated with minimum levels less than the minimum levels published today in § 430.01) would be technically and economically achievable. To determine whether the technologies are capable of achieving more stringent limitations, EPA would need to evaluate data from chemical analyses using these future more sensitive methods. Those data obviously are not available today. Until any further revision of today's limitations and standards for subparts B and E, the limitations for these analytes will continue to be associated with the minimum levels specified today in Section 430.01(i).

Table VI–4 identifies the analytical methods used to generate the data for today's rule. The minimum levels in this Table are established by the analytical methods and have been validated by use.

TABLE VI–4.—ANALYTICAL METHODS AND MINIMUM LEVELS FOR REGULATED POLLUTANTS

Pollutant	Method	Minimum level
2,3,7,8-TCDD	1613	10 pg/L
2,3,7,8-TCDF	1613	10 pg/L
Trichlorosyringol	1653	2.5 µg/L
3,4,5-trichlorocatechol	1653	5.0 µg/L
3,4,6-trichlorocatechol	1653	5.0 µg/L
3,4,5-trichloroguaiacol	1653	2.5 µg/L
3,4,6-trichloroguaiacol	1653	2.5 µg/L
4,5,6-trichloroguaiacol	1653	2.5 µg/L
2,4,5-trichlorophenol	1653	2.5 µg/L
2,4,6-trichlorophenol	1653	2.5 µg/L
Tetrachlorocatechol	1653	5.0 µg/L
Tetrachloroguaiacol	1653	5.0 µg/L
2,3,4,6-tetrachlorophenol	1653	2.5 µg/L
Pentachlorophenol	1653	5.0 µg/L
AOX	1650	20 µg/L

(d) Limitations. Table VI–5 presents the final effluent limitations for Options A and B for the Bleached Papergrade Kraft and Soda subcategory that are based on in-plant process changes. These limitations are based on data obtained from bleach plant effluent prior to mixing with other mill wastestreams.

TABLE VI–5.—BLEACHED PAPERGRADE KRAFT AND SODA LIMITATIONS COMPARISON OF OPTIONS A AND B

	Daily maximum limitation		Monthly average limitation	
	Option A	Option B	Option A	Option B
TCDD (pg/L)	<ML	<ML	N/A	N/A
TCDF (pg/L)	31.9	31.9	N/A	N/A
Chlorinated Phenolic Pollutants* (µg/L)	<ML	<ML	N/A	N/A
Chloroform (g/kkg)	6.92	6.92	4.14	4.14

*Trichlorosyringol, 2,4,5-trichlorophenol, 2,4,6-trichlorophenol, 3,4,5-trichlorocatechol, 3,4,5-trichloroguaiacol, 3,4,6-trichlorocatechol, 3,4,6-trichloroguaiacol, 4,5,6-trichloroguaiacol, tetrachlorocatechol, tetrachloroguaiacol, 2,3,4,6-tetrachlorophenol, and pentachlorophenol.

ML or Minimum level—the level at which the analytical system gives recognizable signals and an acceptable calibration point. See 40 CFR 430.01(i).

N/A Not applicable.

EPA did not establish monthly average limitations and standards for dioxin and the 12 chlorinated phenolic pollutants because the daily maximum limitations and standards for these pollutants are expressed as less than the Minimum Level (<ML). (The same is true for AOX limitations for TCF processes.) The purpose of a monthly average limitation is to require continuous dischargers to provide better control, on a monthly basis, than required by the daily maximum limitation. However, for these pollutants, today's analytical methods cannot measure below the minimum levels associated with the daily maximum limitations. Thus, even if a permitting or pretreatment authority requires more frequent monitoring for these pollutants than the monthly monitoring frequencies specified in today's rule, see 40 CFR 430.02, monthly average limitations would still be expressed as <ML.

EPA did not establish a monthly average limitation for furan because a

monthly average limitation would be based on the assumption that a mill would be required to monitor more frequently than once a month. For the reasons set forth in Section VI.B.8.c(4)(b), EPA believes that one monthly monitoring event is sufficient; however, if permitting or pretreatment authorities choose to require more frequent monitoring for furan, they may set monthly average limitations and standards based on their best professional judgment. See, e.g., 40 CFR 430.24(a)(1), footnote b. Today's rule requires mills to monitor for chloroform four times per month (i.e., weekly); therefore, both daily maximum and monthly average limitations are presented.

EPA has also calculated both daily maximum and monthly average limitations for AOX based on Option A, Option B, and TCF bleaching processes. These limitations are presented in Table VI–6. Today's rules require AOX to be monitored every day during the month. See 40 CFR 430.02(a). Annual average limitations for AOX apply only to non-continuous discharges. The alternative TCF effluent limitations apply only to AOX and are expressed as ''<ML.''

TABLE VI–6.—BLEACHED PAPERGRADE KRAFT AND SODA AOX LIMITATIONS

[Comparison of Options A and B, and Alternative TCF Limitations]

	Option A (kg/kkg)	Option B (kg/kkg)	Alternative TCF limitations (kg/kkg)
Annual Average	0.512	0.208	N/A
Monthly Average Limitation	0.623	0.272	N/A
Daily Maximum Limitation	0.951	0.476	<ML

In order for a fiber line to qualify for the voluntary alternative TCF limitations, the discharger must certify to the permitting authority, as part of its NPDES permit application, that the fiber line bleaches pulp exclusively with TCF bleaching processes. See 40 CFR 430.24(a)(2). (A fiber line that swings between ECF and TCF bleaching processes, for example, would not be eligible for these alternative effluent limitations because dioxin and other chlorinated organic pollutants will be generated at least some of the time and therefore need to be controlled.) EPA decided not to promulgate an additional requirement, as it had proposed, that would have required dischargers to provide monitoring results for three composite bleach plant wastewater samples for dioxin, furan, and the 12 chlorinated phenolic pollutants and three grab samples for chloroform in order to qualify for those limitations. See 58 FR at 66195. EPA believes that the additional proposed requirement is unnecessary because EPA has no reason to believe that a discharger would falsify its TCF certification and because a discharger certifying to TCF processes at a particular fiber line is required in any case to notify the permitting authority if it converts the fiber line in whole or in part to bleaching processes employing chlorine or chlorine-containing compounds. As a result of this notification, the discharger's TCF-based permit limits would need to be modified to reflect the new processes. See, e.g., 40 CFR 122.21(g)(3), 122.21(g)(7), and 122.41(l).

(5) Selection of BAT/PSES Technology Basis. After considering all of the technology options described in the December 1993 proposal and the July 1996 Notice in light of the factors specified in section 304(b)(2)(B) of the Clean Water Act, EPA has selected Option A as its technology basis for the BAT limitations promulgated today for Subpart B. For the reasons set forth below, EPA has also selected Option A as its technology basis for the PSES promulgated today for Subpart B. (For a discussion of PSES options, parameters, and EPA's pass-through analysis, see Section VI.B.5.c.) The record establishes that Option A is technically available. See the Supplemental Technical Development Document, DCN 14487. As discussed in more detail below, EPA has also concluded that it is economically achievable. Further, EPA has determined, for the reasons set forth in Section VII, that Option A has no unacceptable adverse non-water quality environmental impacts. Finally, EPA determined that Option A achieves greater environmental benefits than any other economically achievable technology considered by EPA and, for that reason, also represents the best technology among those considered.

EPA considered the age, size, processes, other engineering factors, and non-water quality environmental impacts pertinent to mills in this subcategory for the purpose of evaluating the BAT and PSES technology options. None of these factors provides a basis for selecting different technologies than EPA has chosen as the basis for today's BAT limitations and PSES.

In order to evaluate economic achievability, EPA concluded that it was appropriate to examine BAT/PSES in view of the MACT requirements also being promulgated today for mills subject to subpart B. As a general matter, when evaluating the economic impact of the candidate BAT/PSES technologies, EPA generally looks at the industry as it exists at the time the decision is made. In this industry, subpart B mills will be subject to significant additional costs as a result of today's MACT I rule. See Section VIII. Therefore, although EPA has not ascribed MACT I costs to the BAT/PSES costs of today's rule, EPA is taking those costs into account when considering the total impact of the various BAT/PSES options on subpart B mills. This is particularly appropriate here because EPA undertook this Cluster rulemaking in order to consider at one time a range of air and water controls and their total economic consequences, among other things. Thus, EPA believes that its BAT/PSES analysis more accurately reflects the actual costs and economic impacts that mills in the Bleached Papergrade Kraft and Soda subcategory will experience. EPA also performed its economic achievability analysis based on the impact of BAT/PSES costs without considering the impact of the MACT I rule on subpart B mills. This analysis did not change EPA's final conclusions. Additionally, in response to comments, and because more information is now available regarding estimated costs, EPA also considered the economic impacts of the MACT II requirements being proposed at this time. The additional consideration of projected MACT II costs also does not alter EPA's determination of economic achievability in this instance.

EPA has determined that the selected BAT/PSES model technology (Option A)

is economically achievable for the Bleached Papergrade Kraft and Soda subcategory as a whole for several reasons. When EPA considered the effect of BAT/PSES compliance in light of the MACT I rule on subpart B mills, EPA estimated that the selected BAT/PSES Option would cause two mill closures, with related direct loss of 900 jobs and a $275 million decrease in shipments, and no firm failures that are likely to result in additional job loss. (See Section VIII.F and Table VIII–4 for other economic impacts associated with the selected BAT/PSES option, with and without MACT I compliance costs.) The number of closures (two) is less than 3 percent of the affected mills (86) in the subcategory. The loss of jobs associated with these closures is about one percent of subcategory employment. EPA believes that, even with these projected impacts, the selected BAT/PSES is economically achievable for this subcategory as a whole. When the cost of the MACT I rule on subpart B mills is not considered, the selected BAT/PSES would cause one mill closure and no firm failures they are likely to result in additional job loss. See Section VIII.E. For confidentiality reasons, related losses of jobs and shipments cannot be disclosed in this **Federal Register** notice, but are described in the CBI portion of the record.

EPA concluded that Option B is not economically achievable for the Bleached Papergrade Kraft and Soda subcategory as a whole. When EPA considered the effect of BAT/PSES compliance in light of the MACT I rule on subpart B mills, EPA estimated that Option B would cause four mill closures, with a related direct loss of up to 4,800 jobs, and a $1.3 billion decrease in shipments, and one or more firm failures that are likely to result in additional job loss. (See Section VIII.F and Table VIII–4 for other economic impacts associated with Option B with and without MACT I compliance costs.) EPA estimates that when the cost of the MACT I rule is not considered, Option B would cause two mill closures, with a related direct loss of 900 jobs and a $275 million decrease in shipments, and one or more firm failures. See Section VIII.F.1.

While the increased number of closures and related job losses associated with Option B are strong indicators of economic unachievability, the potential firm failures (i.e., bankruptcies) associated with this Option are particularly problematic. For each option, EPA's bankruptcy analysis focuses on whether each affected company can afford to make the collective investment required to install the technology upon which the option is based for all of its facilities. The substantially higher capital cost associated with Option B results in the potential failure of one or more firms that Option A does not cause. In most cases, requirements to raise capital to upgrade each mill to meet Option B limitations and standards may seriously jeopardize some companies' ability to cover interest on the new investments as well as other costs. In other words, some companies with insufficient cash or equity resources to cover the costs of these upgrades may be in jeopardy of bankruptcy. It takes an event of considerable magnitude to induce bankruptcy in a firm. The fact that Option B, even when considered without regard for the impact of the MACT I rule on this subpart, is projected to drive one or more firms into bankruptcy indicates to EPA the significant magnitude of Option B's capital requirements. In EPA's view, the overall effect of Option B on those firms would be substantial. See Section VIII.F. For a more detailed discussion of EPA's firm failure analysis, see the Economic Analysis, Chapter 6 (DCN 14649).

The magnitude of the effects that may arise from large firm bankruptcies is a substantial indicator of the economic unachievability of Option B. The negative effects are indefinite and unquantifiable, but EPA has reason to believe, based on the recent history of the domestic pulp and paper industry, that they are likely to be significant. The effects include, as examples, stock price turmoil, reduced workforces, and foreign ownership of formerly American-owned assets. Which impacts occur would depend on the responses of the potentially affected firm(s) to the increased costs. Companies that enter bankruptcy or near-bankruptcy are more likely to see their stock prices fall, causing substantial loss of investor value and possibly becoming the target of a hostile takeover by a domestic or foreign company. Recent history of hostile or friendly takeovers shows that the acquiring companies subsequently divested themselves of unproductive assets, closed a number of mills and eliminated over 15,000 jobs, affecting both smaller and larger communities, with the most devastating consequences on the smaller communities. Some companies may downsize some operations without closing any mills, thus potentially causing job losses in communities that depend on the mills directly or indirectly for their economic well-being. The potential job losses associated with the likely firm failure(s) represent an unacceptably large portion of the employment losses associated with this option for the Bleached Papergrade Kraft and Soda subcategory. See DCN 14379, 14382, and 14388 (contained in CBI record). In addition, weaker companies might be forced to sell off blocks of assets, or their corporate existence might be endangered. Companies may choose to close marginal plants to avoid the cost of upgrade or to sell off mills both to avoid the costs of upgrade and to raise capital to upgrade the remaining mills. Closed mills' equipment could be sold to overseas companies, who could initiate low cost pulp or paper production and gain market share from U.S. firms as a result. Foreign companies acquiring U.S. mills might close or alter those mills to gain market share (although such behavior is not necessarily economically efficient). Substituting foreign for domestic production means an additional loss of jobs and income for Americans. See Economic Analysis, Chapter 6 (DCN 14649).

EPA also considered the effects of delaying the implementation of Option B for five years. EPA acknowledges that the uncertainties of the pulp and paper market and the financial circumstances of individual firms make questionable the validity of any assumptions regarding the relative effects of a five-year delay. EPA's evaluation of delaying the implementation of Option B for five years involves consideration of discounting Option B costs for five years, the expected industry price and revenue cycle, and resulting aggregate costs, closures, and firm failures. EPA has determined, due to expected effects of the industry cycle, that deferring the costs of this technology for five years would not appreciably reduce the economic impacts for this subcategory as a whole compared to immediate compliance. See Economic Analysis, Chapter 6 (DCN 14649). For example, EPA found that under the most likely scenario (in which the costs of complying with MACT I are taken into account), the same number of mills (four) would be predicted to close even if implementation of Option B were delayed for five years. Firm failure predictions could not be made for five years hence because the analysis is based on several financial components, each of which may change dramatically and unpredictably in the interim.

Based on the above discussion, EPA concludes that only the selected BAT/PSES technology option—Option A—is economically achievable today for the Bleached Papergrade Kraft and Soda subcategory as a whole. EPA acknowledges that the number of

predicted closures attributable to Option B, when considered without regard for the impact of the MACT I rule on subpart B mills, is the same as the number of predicted closures under Option A when MACT I impacts are considered. (This is also true for job losses and effects on shipments.) However, EPA does not believe that these impacts alone are a compelling decision basis for this rulemaking. Not only would such an analysis fail to account for the real-world economic impacts of the concurrent MACT I rulemaking, but the closures and related impacts by themselves fail to express the total economic impacts EPA predicts for Option B. For the reasons described above, EPA concludes that it is appropriate to take into account the potential firm failures attributable to Option B in this rulemaking. Further, EPA concludes that it is appropriate in this rulemaking to base the economic achievability determination on the total economic impacts (the closures and the projected firm failures, coupled with predicted regional and market impacts) of its BAT/PSES options on the industry. Those total economic impacts constitute the principal and deciding difference between the selected BAT/PSES technology basis and Option B. Based on that conclusion, EPA has determined that only Option A is economically achievable for subpart B as a whole, both when the impacts of compliance with the MACT I rule are considered and when they are not.

EPA is also rejecting Option B because its capital costs are simply too high when compared to Option A. Implementation of Option B would result in capital costs that are more than $1 billion greater than those associated with Option A. EPA believes that this consideration is particularly relevant in this rulemaking for several reasons. First, these Cluster Rules represent the fourth set of effluent limitations guidelines and standards promulgated for subpart B mills. Since 1977, the industry has incurred substantial capital costs to achieve its current level of pollutant control and has achieved significant pollutant loading reductions. This is also the first pulp and paper regulation to employ process changes, rather than treatment technologies, as the core of its model BAT/PSES technology. EPA is authorized, in the exercise of its discretion, to consider these factors as the Administrator deems appropriate in selecting BAT. See CWA section 304(b)(2)(B). For all of these additional reasons, EPA has concluded that Option B is not the best available technology economically achievable for subpart B at this time.

EPA also evaluated the economic achievability of TCF process technologies for subpart B mills. EPA concluded that the annualized cost of retrofitting existing sources for TCF is substantially greater than the annualized cost of Option B (regardless which bleaching chemicals are used), with additional impacts ranging from seven estimated closures and 7,100 job losses to the potential that a greater number of firms would be placed in jeopardy of bankruptcy. See Section VIII.F. (When this option is considered in light of MACT I compliance costs, the economic impacts would be even greater. See id.) EPA, therefore, concluded that TCF bleaching processes are not economically achievable for the subcategory as a whole at this time. Nevertheless, EPA is promulgating voluntary alternative BAT limitations and PSES based on TCF bleaching processes in order to encourage mills to use this technology whenever possible. See 40 CFR 430.24(a)(2), 430.26(a)(2).

EPA determined that Option A is the best technology because no other option that was both available and economically achievable resulted in greater reductions in effluent loadings for dioxin, furan and other significant pollutants of concern. (See 58 FR at 66110 for other options considered at proposal.) For a discussion of the effluent reduction benefits associated with Option A, see Section VIII.G.

(6) Point of Compliance Monitoring. EPA is requiring mills in subpart B to demonstrate compliance with BAT limitations for dioxin, furan, chloroform, and 12 chlorinated phenolic pollutants inside the discharger's facility at the point where the wastewater containing those pollutants leaves the bleach plant. EPA is authorized by the Clean Water Act and EPA's regulations at 40 CFR 122.44(i), 122.45(h), and 125.3(e) to specify an in-plant point of compliance monitoring for technology-based limitations. Hereafter, EPA refers to the BAT limitations for which compliance must be demonstrated in-plant as ''in-plant limitations.'' As set forth in more detail below, EPA is establishing in-plant limitations on bleach plant effluent because limitations imposed on those pollutants at the point of discharge are impractical and infeasible as measures of the performance of process technologies representing the technology-based levels of control. Moreover, in-plant effluent limitations are consistent with the MACT standards for chloroform, which independently require achievement of BAT limitations on dioxin, furan, chloroform and the 12 chlorinated phenolic compounds at the bleach plant (in addition to compliance with AOX limitations) in order to ensure that the removals represented by the MACT technology floor—complete substitution of chlorine dioxide for elemental chlorine and elimination of hypochlorite—are attained.

Mills using the model BAT technology, described in section VI.B.5.a(1), are able to achieve at the bleach plant concentrations of dioxin and the 12 chlorinated phenolic pollutants at levels below the minimum levels of currently available analytical methods. Furan concentrations, in turn, are very near the analytical minimum levels. (At the end of the pipe, furan in many mills' effluent cannot be detected by available analytical methods.)

Because only 10 to 40 percent of the wastewater discharged by mills in subpart B originates in the bleach plant, (see the Supplemental Technical Development Document, DCN 14487) the concentrations of pollutants in the final effluent would be one-tenth to two-fifths of their concentrations at the bleach plant. In the biological wastewater treatment system, the pollutants may be present but in concentrations below the applicable analytical minimum levels. When they are discharged to receiving streams, however, dioxin and furan bioaccumulate in aquatic organisms. Were EPA to allow compliance monitoring of the final effluent, there would be no way to determine whether the bleach plant effluent has been adequately controlled or whether the effluent has simply been diluted below the analytical minimum level by the other flows. Diluting pollutants in this manner rather than preventing their discharge is inconsistent with achieving the removals represented by the technology-based levels of control, and hence with the purpose of the BAT limitations. It is also inconsistent with the goals of the Clean Water Act in general. See sections 101(a) and 301(b)(2)(A). While no mill is required to install EPA's model BAT technology, establishing limitations at the bleach plant is the only way EPA can ensure that none of these pollutants will be discharged at concentrations greater than the levels achievable through implementation of the best available technology. See *E.I. du Pont de Nemours & Co.* v. *Train*, 430 U.S. 112, 129 (1977).

With respect to the 12 chlorinated phenolic pollutants, EPA acknowledges that these pollutants could be degraded by biological treatment of the facility's combined wastewater. However, the

same process technologies necessary to address dioxin and furan also reduce the levels of chlorinated phenolic pollutants to concentrations below minimum levels at the bleach plant. Commenters have supplied no data showing that the chlorinated phenolic pollutants should or indeed, as a practical matter, could be segregated from the dioxin- or furan-bearing wastestreams in order to utilize a mill's secondary treatment system fully. Nor is there any assurance that BAT limitations for these pollutants, if monitored at the end of the pipe, would be achieved by treatment rather than simply by the effects of dilution. See 40 CFR 122.45(h). Thus, EPA believes that it is appropriate to require compliance monitoring for the BAT limitations on the 12 chlorinated phenolic pollutants at the point they most easily can be achieved and measured—at the bleach plant.

In the case of chloroform, in-plant limits are authorized by 40 CFR 122.45(h) because they offset the effects of dilution, in this case, the occurrence of uncontrolled volatilization. In other regulatory contexts, EPA recognizes that dilution includes not only mixing a pollutant of concern with other wastestreams, but also mixing it with excess air in the form of uncontrolled volatilization. See 52 FR 25760, 25778–79 (July 8, 1987). Volatilization, like dilution, does nothing to remove, destroy, or immobilize pollutants, and for this reason is not in itself a form of treatment. id. at 25779. The policy reasons supporting that principle in the hazardous waste context similarly apply here.

Finally, EPA is setting effluent limitations at the bleach plant in order to avert the non-water quality environmental impacts caused by the volatilization of chloroform to the air and in order to be consistent with its Clean Air Act determination that the MACT floor for chloroform consists of bleach plant process modifications, i.e., complete chlorine dioxide substitution and elimination of hypochlorite as bleaching agents. Specifically, EPA is requiring under the Clean Air Act that chloroform emissions be controlled by complying with the BAT requirements for all regulated pollutants. See 40 CFR 63.445(d). Therefore, EPA has determined under its Clean Air Act authority that bleach plant technologies—and bleach plant limitations on dioxin, furan, chloroform and the 12 chlorinated phenolics—are necessary to regulate air emissions of chloroform. The situation presented here is very different from the situation EPA faced when promulgating effluent limitations guidelines and standards for the organic chemicals, plastics and synthetic fibers industrial category in 1987. See 52 FR 42522, 42658–62 (Nov. 5, 1987). In that rulemaking, the issue before EPA was whether to use in-plant limitations and standards to regulate air emissions of certain volatile and semi-volatile pollutants; EPA chose not to set in-plant requirements for that purpose because it determined that the regulation of such emissions was best accomplished in a Clean Air Act proceeding, which EPA was commencing at that time. See 52 FR at 42560–62. In contrast, EPA in this rulemaking integrated its decision-making under the Clean Water Act and the Clean Air Act expressly to address these cross-media issues. Taking into account both the air and water objectives of these Cluster Rules, EPA therefore concludes that it is highly appropriate for EPA to set effluent limitations under the Clean Water Act to correspond to and support its concurrent regulation of air emissions under the Clean Air Act.

b. New Source Performance Standards. (1) Background. The Agency proposed to revise NSPS for the Bleached Papergrade Kraft and Soda subcategory. New mills have the opportunity to incorporate the best available demonstrated technologies, including process changes, in-plant controls, and end-of-pipe treatment technologies.

(a) Definition of ''New Source''. EPA had proposed supplemental definitions of the term ''new source,'' as provided in National Pollutant Discharge Elimination System (NPDES) permit program regulations found at 40 CFR 122.2 and 122.29, for the pulp and paper industry only. See 58 FR at 66116–17. EPA is codifying a definition of ''new source'' in Part 430 for subparts B and E. See 40 CFR 430.01(j). The new definition provides that new source performance standards are triggered by new ''greenfield'' mills, complete replacements of entire fiber lines (e.g., pulping and bleaching), or the construction of a new source whose processes are substantially independent of an existing source, such as a new fiber line built to supplement an existing fiber line. Specifically excluded from the definition of new source are existing mills that modify existing fiber lines for purposes of complying with either BAT limitations or PSES, and existing mills that replace entire fiber lines in order to comply with Advanced Technology BAT limitations. For more details, see Section VI.B.8.a(2).

(b) Proposed NSPS. EPA proposed NSPS for toxic and nonconventional pollutants for the Bleached Papergrade Kraft and Soda subcategory based on the combination of both oxygen delignification and extended cooking followed by 100 percent substitution of chlorine dioxide for elemental chlorine and elimination of hypochlorite (identified at proposal as Option 5). The proposed technology bases for NSPS also included the other elements described as part of BAT in VI.B.5.a(1). EPA also proposed NSPS for BOD_5 and TSS based on the single best demonstrated end-of-pipe secondary wastewater treatment system. See 58 FR at 66116–18, 66197. To encourage continuing innovation in the development of processes to reduce or eliminate the discharge of pollutants from the Bleached Papergrade Kraft and Soda subcategory, EPA also proposed alternative NSPS limits for mills adopting TCF processes. See 58 FR at 66111.

(2) Options Considered. In addition to the option proposed for NSPS, EPA considered three other options for the technology basis of NSPS for toxic and nonconventional pollutants. These options are summarized below. For further discussion of these options, see the Supplemental Technical Development Document, DCN 14487. The first alternative option is identical to BAT Option B, described above. This revised NSPS option includes extended delignification (i.e., oxygen delignification and/or extended cooking) to produce softwood pulps with a kappa number of approximately equal to or less than 20 (approximately 13 for hardwoods), followed by complete (100 percent) substitution of chlorine dioxide for elemental chlorine and elimination of hypochlorite for bleaching. EPA concluded that there are no performance differences between the proposed NSPS option and this revised option. See the Supplemental Technical Development Document, DCN 14487.

EPA also considered an ECF technology used at two U.S. mills consisting of oxygen delignification followed by ozone bleaching, enhanced extraction, and final chlorine dioxide brightening. This technology is used to produce pulps of somewhat lower brightness than market pulps. Finally, the Agency considered a TCF process technology that one U.S. mill is currently using to produce pulps with brightness up to 83 ISO.

For conventional pollutants, EPA considered the proposed NSPS option based on the single best available demonstrated end-of-pipe secondary wastewater treatment and a second option based on the best available demonstrated performance of a

secondary wastewater treatment system as characterized by the average of the best 50 percent of the existing mills in the subcategory.

(3) Option Selected, Pollutants Regulated, and Costs. EPA is promulgating NSPS for the Bleached Papergrade Kraft and Soda subcategory for toxic and nonconventional pollutants based on the NSPS option equivalent to BAT Option B. EPA has determined that Option B technology represents the best demonstrated control technology, process, operating method, or other alternative available at this time. The toxic and nonconventional pollutants regulated by NSPS are the same as those regulated by BAT. For further discussion of the NSPS model technology, the Supplemental Technical Development Document, DCN 14487.

EPA rejected as possible NSPS technologies the technologies that have not been demonstrated to achieve full market pulp specifications. EPA knows of two ECF bleach lines using ozone-based bleaching in the U.S. One line uses an OZE_oDD bleach sequence to bleach hardwood to 83 GE brightness (less than 82 ISO). The other line uses an OZE_oD bleach sequence to bleach softwood to 84 ISO, somewhat less than full market brightness. EPA collected data from this line that confirm that OZE_oD bleaching results in much lower water use and pollutant loadings than either Option A or Option B. Because of this level of performance, EPA strongly encourages further development of ozone-based bleaching sequences—as part of either ECF or TCF sequences. It is possible that lines using ozone-based bleaching sequences will achieve the AOX limits promulgated as part of the Voluntary Advanced Technology Incentives Program, which is described in Section IX of this Notice.

With respect to TCF bleaching processes, several non-U.S. mills have reported the production of TCF softwood kraft pulp at full market brightness. However, EPA's data are not sufficient to confirm that TCF bleaching processes are technically demonstrated for the full range of market products currently served by the kraft process. EPA is also unable to define a segment of the Bleached Papergrade Kraft and Soda subcategory for which TCF bleaching processes are known to be technically feasible and thus could be the basis for NSPS. EPA believes that progress being made in developing TCF bleaching processes is substantial, however, and that additional data may demonstrate that TCF processes are indeed available for the full range of market products. To this end, elsewhere in today's **Federal Register** Notice, EPA is inviting additional data and comment on the full range of market specifications currently being achieved for TCF kraft pulp (e.g., brightness, strength, and cleanliness). EPA will evaluate whether the performance of this technology will result in greater removals than the performance of the NSPS technology option being selected today. Depending on these findings, EPA will determine whether to propose revisions to NSPS based upon TCF and, if appropriate, flow reduction technologies.

In addition to NSPS relating to the Voluntary Advanced Technology Incentives Program, which is discussed below in this section, EPA is also promulgating alternative NSPS for Bleached Papergrade Kraft and Soda mills voluntarily choosing to use TCF technologies. See 40 CFR 430.25(b)(2).

For the conventional pollutants BOD_5 and TSS, EPA is basing NSPS upon the best available demonstrated performance of a secondary wastewater treatment system as characterized by the average of the best 50 percent of the existing mills in the subcategory. EPA has determined that the performance of the single best mill does not account for all sources of process-related variability in conventional pollutant generation and treatability expected in the entire subcategory, including raw materials (i.e., furnish), process operations, and final products. In selecting the final NSPS technology basis for conventional pollutants, EPA found it necessary to consider the secondary wastewater treatment performance of the best 50 percent of the existing mills in this subcategory in order to ensure that the resulting standards reflect the full range of processes and raw materials to produce the full range of products covered by this subcategory. For further discussion, see the Supplemental Technical Development Document, DCN 14487, and DCN 14497, Vol. I and II.

EPA is not revising NSPS for pH for subpart B; however, for the convenience of the permit writer, EPA has recodified the 1982 NSPS for pH as part of the table of newly promulgated NSPS for toxic, non-conventional, and other conventional pollutants. See 40 CFR 430.25(b).

In selecting its model NSPS technologies, EPA considered all of the factors specified in CWA section 306, including the cost of achieving effluent reductions. The incremental capital cost of complying with the selected NSPS for all pollutants, as compared to the costs of complying with standards based on the next best technology, BAT Option A, is only 0.5 to 2.0 percent of the total capital cost of constructing either a new source fiber line at an existing mill or a new greenfield mill. Moreover, the process technologies that form the basis for NSPS result in lower pollutant loadings requiring biological treatment. Loadings of BOD_5 from a bleach line employing NSPS will be approximately 30 percent lower than loadings from a conventional bleach line. Compared to the cost of treating wastewater from a conventional bleach line to meet current BPT/BCT effluent limitations guidelines, the cost of treating wastewater from a NSPS bleach line to meet NSPS for conventional pollutants will be the same or lower. Finally, as of mid-1995 there are 14 existing mills representing approximately 16 percent of the bleached papergrade kraft production that employ the Option B technology. For these reasons, EPA concludes that the costs of complying with NSPS for toxic, non-conventional or conventional pollutants do not present a barrier to entry. See the Supplemental Technical Development Document, DCN 14487. See also Section VIII and Chapter 6 of the Economic Analysis, DCN 14649.

The Agency also considered energy requirements and other non-water quality environmental impacts for the selected NSPS option. EPA concluded that increased chemical recovery and reduced energy consumption and operating costs would occur for this option. EPA also concluded that non-water quality environmental impacts were only marginally different than for the selected BAT technology option and are acceptable. Thus, EPA concluded that none of the statutory factors justified selecting a different NSPS model technology than the one chosen. See Section VII. See also the Supplemental Technical Development Document, DCN 14487.

EPA is also promulgating NSPS as part of the Voluntary Advanced Technology Incentives Program with standards set at the Tier II and Tier III levels. See 40 CFR 430.25(c). For a discussion of this program, see Section IX. A new source may choose to enroll in the Voluntary Advanced Technology Incentives Program at the Tier II or Tier III NSPS level and therefore to commit to achieve those standards at the time it commences operation. Alternatively, a new source may choose to commence operation at the compulsory NSPS level and then later enroll in the Incentives Program at the Tier II or Tier III level as an existing source, or enroll in the Incentives Program once Tier II or Tier III limitations are achieved.

Finally, EPA notes that the previously promulgated NSPS for the biocides pentachlorophenol and trichlorophenol

continue to apply to all new sources. See 40 CFR 430.25(d).

(4) Limitations and Point of Compliance Monitoring. EPA is promulgating NSPS for dioxin, furan, chloroform, the 12 chlorinated phenolic pollutants, and AOX for Subpart B at the levels set forth in Tables VI–5 and VI–6 for BAT Option B. See 40 CFR 430.25(b)(1). For a discussion of EPA's development of those standards (presented in the context of possible BAT limitations derived from Option B technologies), see Section VI.B.5.a(4). The numerical values of today's NSPS for BOD5 and TSS for the Bleached Papergrade Kraft and Soda subcategory have been revised from those provided in the July notice. For a discussion of these changes, see the Statistical Support Document, DCN 14496. The final NSPS for BOD_5, TSS and pH are presented in Table VI–7 below.

TABLE VI–7.—NEW SOURCE PERFORMANCE STANDARDS FOR CONVENTIONAL POLLUTANTS FOR THE BLEACHED PAPERGRADE KRAFT AND SODA SUBCATEGORY

NSPS			
Pollutant or pollutant property	Continuous dischargers		Non-continuous dischargers
	Maximum for any 1 day (kg/kkg)	Monthly average (kg/kkg)	Annual average (kg/kkg)
BOD5	4.52	2.41	1.73
TSS	8.47	3.86	2.72
pH	(1)	(1)	(1)

1 Within the range of 5.0 to 9.0 at all times.

EPA is requiring mills to demonstrate compliance with the NSPS for dioxin, furan, chloroform and the 12 chlorinated phenolic pollutants inside the discharger's facility at the point where the wastewater containing those pollutants leaves the bleach plant. See 40 CFR 430.25(e). EPA bases this decision on the reasons discussed in Section VI.B.5.a(6) for BAT limitations. EPA is not specifying a point of compliance monitoring for AOX, BOD_5, TSS, pH, or the biocides.

c. Pretreatment Standards for Existing Sources (PSES) and Pretreatment Standards for New Sources (PSNS). (1) Background. EPA proposed the same technology option for PSES as it did for BAT. This proposed option would have set PSES for the same pollutants controlled by BAT. For new indirect discharging facilities, EPA proposed that PSNS be set equal to NSPS for the toxic and nonconventional pollutants. At proposal, EPA also discussed three options for implementing the pretreatment standards. See 58 FR at 66123–25. EPA also solicited comment on whether pretreatment standards for BOD_5 and TSS were warranted to ensure that pass-through of these and other pollutants (e.g., AOX) did not occur.

(2) Pass-through Analysis for PSES and PSNS. EPA promulgates pretreatment standards for pollutants that pass through or interfere with POTWs. EPA performed a pass-through analysis as part of this rulemaking, which is summarized below. See also the Supplemental Technical Development Document, DCN 14487. EPA has determined for subpart B mills that dioxin, furan, chloroform, the 12 chlorinated phenolic pollutants, and AOX pass through POTWs. Therefore, the Agency is promulgating PSES and PSNS for these pollutants. See 40 CFR 430.26(a)(1) and 430.27(a)(1).

EPA's record shows that both direct discharging mills and POTWs accepting wastewaters from pulp and paper mills in the Bleached Papergrade Kraft and Soda subcategory operate secondary biological treatment systems. The indirect discharging mills in this subcategory contribute the majority of the pollutant loading and up to 90 percent of the flow to these POTWs. (EPA refers to these POTWs as ''industrial POTWs.'') EPA has reviewed data available in the record for BOD_5 and TSS, among other pollutants, and has determined that the biological treatment systems at these POTWs are comparable to the biological treatment systems operated by direct discharging mills in subpart B. See the Supplemental Technical Development Document, DCN 14487.

EPA reviewed all available data in the record to conduct a pass-through analysis. EPA compared the percent of removals achieved by subpart B mills implementing the BAT technologies to the percent of the same pollutants removed by the industrial POTWs receiving effluent from subpart B mills. EPA's record shows that dioxin and furan are not removed by biological treatment systems and so are not removed by the POTW. Therefore, these pollutants pass through untreated and are discharged to receiving streams, where dioxin and furan bioaccumulate in aquatic organisms. EPA bases this conclusion on data reported in the ''104-Mill Study,'' which EPA undertook in cooperation with industry in 1988/89. That study shows that direct discharging bleached papergrade kraft and soda mills operating secondary biological treatment systems (without the addition of bleach plant process controls) discharge dioxin and furan in detectable quantities. When mills in that subcategory later implemented bleach plant process changes and controls comparable to the model BAT technologies considered in promulgating today's BAT effluent limitations guidelines, the data show that dioxin and furan discharges dropped below the minimum level at which those pollutants can be reliably measured. This was the case even where there was no concurrent change to the secondary biological treatment systems. (Indeed, EPA's candidate BAT technologies assume secondary biological treatment systems operating at the 1989 level). Because, as discussed above, the industrial POTWs receiving effluent from bleached papergrade kraft and soda mills operate biological treatment systems that are comparable to those operated by direct discharging mills in the ''104-Mill Study,'' EPA concluded that subpart B mills implementing the selected in-plant BAT model technology achieve substantially greater reductions of dioxin and furan than industrial POTWs can achieve from effluent not subject to BAT-level process controls. EPA finds that in the absence of PSES equivalent to BAT levels of control, dioxin and furan would pass through POTWs. EPA also believes that the presence of these pollutants in the POTWs' secondary

sludge could possibly interfere with their sludge disposal options.

For chloroform, EPA also evaluated the removal efficiencies achieved by POTWs by comparing the removals achieved by direct discharging mills using BAT process technologies to the removals achieved by POTWs receiving effluent from subpart B mills. The record shows that, without the BAT process changes, a very high percentage of chloroform volatilizes from collection, conveyance, and aeration systems. EPA has consistently refused in these circumstances to regard such transfers of pollutants from wastewater to air as treatment. See, e.g., 59 FR 50638, 50665 (Sept. 28, 1993) (pesticides chemicals guidelines); 58 FR 36872, 36886–88 (July 9, 1993)(organic chemicals, plastics, and synthetic fibers guidelines). Therefore, because of this volatilization of chloroform in the absence of bleach plant process changes, the quantity of chloroform actually available to be removed by the POTWs' secondary treatment works is less than the quantity of that pollutant removed by the direct discharger employing BAT. Accordingly, EPA concludes that there is pass-through of chloroform in the absence of pretreatment standards for this pollutant, as well as unacceptable non-water quality environmental impacts from air emissions. For a detailed discussion of chloroform volatilization, see Section 8.8 of the Supplemental Technical Development Document, DCN 14487, and the Air Docket, No. A–92–40, Item IV–A–8.

EPA's determination that the chlorinated phenolic pollutants pass through the POTW is based on data in the record showing that the selected BAT process technology option (Option A) reduces all 12 of the chlorinated phenolic pollutants to concentrations less than minimum levels for these pollutants in bleach plant wastewaters, prior to end-of-pipe biological wastewater treatment systems. While biological wastewater treatment systems comparable to POTW treatment systems have been found to remove a portion of these chlorinated phenolic pollutants, the removals achieved are less than the removals achieved by the BAT process changes alone. Therefore, because overall chlorinated phenolic pollutant removals with implementation of the model BAT technologies are substantially greater than removals achieved by POTWs, chlorinated phenolic pollutants pass through POTWs.

EPA has also determined that AOX passes through. EPA bases this conclusion on its review of all available data regarding removals of AOX achieved by industrial POTWs that receive a majority of their flow or a majority of their BOD_5 or TSS loadings from indirect dischargers covered by subpart B. Although the data show that the performance of these POTWs in removing AOX is comparable to the performance of end-of-pipe biological treatment systems operated by direct dischargers in this subcategory, the data also show that direct dischargers meeting limitations based on the model BAT technology consistently achieve far greater AOX removals than biological treatment alone can achieve (e.g., at a POTW). (See the Supplemental Technical Development Document, DCN 14487.) Therefore, in the absence of pretreatment standards analogous to BAT, the affected POTWs receiving pulp and paper wastewaters cannot achieve the same overall removals of AOX as achieved by direct dischargers complying with the BAT limitations for AOX. The same is also true when considering removals achieved by new sources complying with NSPS. Therefore, contrary to the preliminary finding in the July 1996 Notice, EPA concludes that AOX passes through POTWs and is setting pretreatment standards for AOX for new and existing indirect discharging mills. See 40 CFR 430.26(a) and 430.27(a).

The pretreatment standards promulgated today for AOX are equivalent to the AOX loadings present in the bleach plant wastewaters of mills employing the BAT/NSPS technologies prior to biological treatment systems at direct discharging mills. EPA expects that removals achieved by indirect dischargers employing the PSES or PSNS model technology, in combination with removals achieved by biological treatment systems at POTWs, will be comparable to the removals achieved by direct dischargers complying with BAT limitations or NSPS.

In reviewing the information available in the record for the pollutants BOD_5 and TSS, EPA concluded that pollutant reductions attained by direct dischargers' biological wastewater treatment systems and by POTWs accepting similar wastewaters are comparable and that pass-through of these pollutants does not occur. As a result, EPA is not promulgating national PSES or PSNS for BOD_5 and TSS for the Bleached Papergrade Kraft and Soda subcategory. Other regulatory authorities may determine, based on a site-specific review of treatment system performance, that locally imposed limits are necessary to prevent the POTW from violating its NPDES permit. See 40 CFR 403.5.

(3) Options Considered. In this final rule, EPA considered the same process technology options and best management practices for PSES and PSNS as it did for BAT and NSPS. In a change from the proposal, EPA did not consider for PSES/PSNS the biological treatment technology that forms part of the candidate BAT and NSPS technologies. Since proposal, EPA has made new findings with respect to the pass-through of BOD_5 and TSS. EPA has also received comments indicating that the lack of sufficient land for the installation of biological treatment at some indirect dischargers makes such systems infeasible and unavailable. This finding, combined with EPA's finding that biological wastewater treatment systems at POTWs treating pulp and paper wastewaters are comparable to the biological wastewater treatment systems operated by direct discharging mills in subpart B, has lead EPA to conclude that biological wastewater treatment should not be included as part of the PSES or PSNS candidate technologies.

(4) Effluent Reductions. As discussed in Section VI.B.5.a.(3) above, after proposal EPA recalculated the effluent reductions attributable to its PSES technology options using a new baseline of mid-1995. See the Supplemental Technical Development Document, DCN 14487.

Table VI–8 shows the estimated baseline and the reduction from baseline expected if the presented options were implemented by all the existing indirect discharging mills in the subcategory (i.e., those mills to which PSES will apply).

TABLE VI–8.—BASELINE DISCHARGES AND ESTIMATED REDUCTIONS OF POLLUTANTS FOR BLEACHED PAPERGRADE KRAFT AND SODA MILLS FOR TECHNOLOGY OPTIONS CONSIDERED[a]

Pollutant parameter	Units	Baseline discharge	Estimated reductions: Option A	Estimated reductions: Option B	Estimated Reductions: TCF
2,3,7,8–TCDD	g/yr	1.25	0.92	1.00	1.25

TABLE VI–8.—BASELINE DISCHARGES AND ESTIMATED REDUCTIONS OF POLLUTANTS FOR BLEACHED PAPERGRADE KRAFT AND SODA MILLS FOR TECHNOLOGY OPTIONS CONSIDERED[a]—Continued

Pollutant parameter	Units	Baseline discharge	Estimated reductions: Option A	Estimated reductions: Option B	Estimated Reductions: TCF
2,3,7,8–TCDF	g/yr	9.47	8.94	9.04	9.47
Chloroform	kkg/yr	4.89	4.28	4.28	4.89
12 Chlorinated phenolic pollutants	kkg/yr	3.58	2.81	2.97	3.58
AOX	kkg/yr	3,010	2,100	2,600	3,010

[a] The TCF calculations assumed that chlorinated pollutants will not be present. For all other calculations, EPA assumed that pollutants reported as ''not detected'' were present in a concentration equivalent to one-half the minimum level of the analytical method.

(5) PSES/PSNS Option Selection. EPA is promulgating PSES and PSNS for dioxin, furan, chloroform, 12 chlorinated phenolic pollutants, and AOX based on the process technologies that form the bases for BAT and NSPS, respectively.

The Agency considered the age, size, processes, other engineering factors, and non-water quality environmental impacts pertinent to Subpart B mills in developing PSES/PSNS. None of these factors provided any basis for establishing different PSES/PSNS. EPA has no data to suggest that the combination of technologies upon which today's PSES/PSNS are based results in unacceptable non-water quality environmental impacts.

Because the costs of the selected BAT and PSES model technologies are attributable solely to process changes, the costs for an existing indirect-discharging bleached papergrade kraft and soda mill to comply with PSES are comparable to a similar direct-discharging bleached papergrade kraft and soda mill. See Section VI.B.5.a(2). As discussed in Section VI.B.5.a(5), EPA found PSES based on BAT Option A to be economically achievable. Similarly, EPA considered the cost of the PSNS technology for new mills (based on BAT Option B) and determined that such costs do not present a barrier to entry, as reflected in the barrier to entry discussion for NSPS in Section VI.B.5.b(3).

The rationale for choosing BAT Option A as the basis for PSES is set forth in Section VI.B.5.a(5). The rationale for selecting NSPS Option B as PSNS is the same as that provided in Section VI.B.5.b for selecting that model technology as the basis for NSPS for this subcategory. Although for the reasons set forth in those sections EPA is not selecting TCF bleaching processes as the model technology for PSES or PSNS, EPA nevertheless is promulgating voluntary alternative pretreatment standards based on TCF bleaching processes in order to encourage mills to use those processes when possible. See 40 CFR 430.26(a)(2) and 430.27(a)(2).

The pretreatment standards for the Bleached Papergrade Kraft and Soda subcategory also include best management practices. See 40 CFR 430.03. These regulations are described in Section VI.B.7. For a discussion of the pass through of pollutants controlled by BMPs, see Section VI.B.7. In addition, the previously promulgated PSES and PSNS for former subparts G, H, I and P for the biocides pentachlorophenol and trichlorophenol continue to apply unless the discharger certifies that it does not use those compounds as biocides. See 40 CFR 430.26(b) and 430.27(b).

(6) Limitations. With the exception of AOX, the limitations promulgated as PSES for Subpart B are identical to those promulgated as BAT limitations for this subpart. See 40 CFR 430.26(a)(1). For a discussion of the development of those pretreatment standards see Section VI.B.5.a(4).

EPA found that while end-of-pipe biological treatment systems at industrial POTWs and at direct dischargers achieve comparable removals of AOX, the total AOX removals achieved by direct discharging mills are greater because of the process changes that are part of the model BAT/PSES technologies. Therefore, EPA has established AOX pretreatment standards based on the performance of process changes alone (biological treatment is not a component of PSES/PSNS). EPA has developed AOX limits for PSES based on bleach plant data for eight mills that employ the process technologies incorporated in Option A. These pretreatment standards are presented in Table VI–9.

TABLE VI–9.—BLEACHED PAPERGRADE KRAFT AND SODA SUBCATEGORY PSES AOX LIMITATIONS

Pollutant parameter	Daily maximum limitation (kg/kkg)	Monthly average limitation (kg/kkg)
AOX	2.64	1.41

Similarly, with the exception of AOX, the PSNS promulgated for Subpart B for toxic and nonconventional pollutants are identical to the NSPS promulgated for this subpart. See 40 CFR 430.27(a)(1). For a discussion of the development of those pretreatment standards, see Section VI.B.5.a(4). EPA has developed AOX limits for PSNS based on bleach plant data for six mills that employ the process technologies incorporated in Option B. These pretreatment standards are presented in Table VI–10.

TABLE VI–10.—BLEACHED PAPERGRADE KRAFT AND SODA SUBCATEGORY PSNS AOX LIMITATIONS

Pollutant parameter	Daily maximum limitation (kg/kkg)	Monthly average limitation (kg/kkg)
AOX	1.16	0.814

(7) Point of Compliance Monitoring. For many of the same reasons set forth in Section VI.B.5.a(6) above in connection with EPA's decision to specify an in-plant point of compliance monitoring for many of the BAT parameters, EPA is requiring indirect discharging mills subject to Subpart B to demonstrate compliance with pretreatment standards for dioxin, furan, chloroform, the chlorinated phenolic pollutants, and AOX at the bleach plant. See 40 CFR 430.26(c) and 430.27(c). As is the case for direct dischargers, data for indirect discharging mills show that standards imposed at the point of discharge to the POTW would make it impractical for the permitting authority to assure that

the indirect discharger is achieving removal of the pollutants as required by the pretreatment standards. Moreover, EPA is concerned that dioxin and furan, even when present in nondetectable amounts at the point of discharge to the POTW, could pass through the POTW and accumulate in the biosolids, thus possibly interfering with the beneficial reuse of that biosolids material. The extent to which sludge can be beneficially reused is the subject of a separate ongoing rulemaking under CWA Section 405. Finally, under EPA's regulations, indirect dischargers are prohibited from substituting dilution for treatment, except where dilution is expressly authorized by the applicable pretreatment standard. See 40 CFR 403.6(d). (That is not the case here.) This prohibition theoretically could be enforced on a pollutant-by-pollutant, case-by-case basis. However, EPA is concerned that such a solution to the effluent's detection and dilution problems may impose an unnecessary financial and technical burden on POTWs.

At the time of proposal, EPA proposed that compliance with PSES/PSNS AOX limitations would be demonstrated at the point of discharge to the POTW. Since biological treatment is no longer part of the model technology for PSES/PSNS, AOX limitations based upon the performance of the PSES/PSNS technology are more appropriately set, and compliance demonstrated, at the bleach plant, prior to mixing with other wastestreams. This will reduce the burden on the pretreatment authority in implementing the PSES/PSNS limitations, as no additional allowance will need to be factored into the AOX limitations that would apply due to sources of AOX beyond the bleach plant. In this respect, the decision to establish in-plant points of compliance monitoring for all PSES/PSNS regulated parameters also furthers the goals of the Unfunded Mandates Reform Act. For all of these reasons, EPA is establishing in-plant points of compliance monitoring for PSES/PSNS on a nationwide level.

6. Papergrade Sulfite Subcategory

a. Segmentation of the Papergrade Sulfite Subcategory. In this final rule, EPA is dividing the Papergrade Sulfite subcategory into three segments to better reflect product considerations, the variation in manufacturing processes, and the demonstration of pollution prevention process changes within the category for the purpose of establishing BAT, NSPS, PSES, and PSNS. EPA's reasons for doing so are discussed in the July 1996 Notice, 61 FR at 36844–45, and in paragraphs b(1)–(2) below. EPA is promulgating final effluent limitations guidelines and standards for each segment. The three segments are:

(1) Production of pulp and paper at papergrade sulfite mills that use an acidic cooking liquor of calcium, magnesium, or sodium sulfite, unless those mills are specialty grade sulfite mills. See 40 CFR 430.51(c)(1). Mills in this segment are ''calcium-, magnesium-, or sodium-based sulfite mills;''

(2) Production of pulp and paper at papergrade sulfite mills that use an acidic cooking liquor of ammonium sulfite, unless those mills are specialty grade sulfite mills. See 40 CFR 430.51(c)(2). Mills in this segment are ''ammonium-based sulfite mills;'' and

(3) Production of pulp and paper at specialty grade sulfite mills, or ''specialty grade sulfite mills.'' Specialty grade sulfite mills are those mills where a significant portion of production is characterized by pulp with a high percentage of alpha cellulose and high brightness sufficient to produce end products such as plastic molding compounds, saturating and laminating products, and photographic papers. EPA considers a significant portion of production to be 25 percent or more. The specialty grade segment also includes those mills where a major portion of production is 91 ISO brightness and above. EPA considers a major portion of production to be 50 percent or more.

See 40 CFR 430.51(c)(3). In order to determine whether a sulfite mill belongs in the specialty grade segment, permitting authorities should consider the expected production mix over the full permit term. For mills that are converting to production in the specialty grade segment, EPA expects these mills will be subject to these limits prior to the time that these mills achieve the production mixes described above.

b. BAT. (1) Options Considered. EPA had proposed BAT effluent limitations for AOX and COD for the entire Papergrade Sulfite subcategory based on totally chlorine-free bleaching processes. Totally chlorine-free (TCF) bleaching processes are bleaching operations that are performed without the use of chlorine, sodium or calcium hypochlorite, chlorine dioxide, chlorine monoxide, or any other chlorine-containing compound. After concluding that the proposed technology was not demonstrated for the full range of products produced by mills using ammonium sulfite cooking liquor or for specialty grade products, EPA segmented the subcategory and considered other BAT options as set forth below. EPA also included for all segments the performance of existing secondary biological wastewater treatment as part of the basis for nonconventional and conventional pollutant effluent limitations and NSPS. For a more detailed discussion of these options, see the Supplemental Technical Development Document, DCN 14487.

(i) Calcium-, Magnesium-, or Sodium-Based Sulfite Mills. The technology option considered for papergrade sulfite products made by this segment was TCF bleaching, as proposed. See 58 FR at 66114–15. Existing TCF mills in this segment produce the same products they had been able to produce using elemental chlorine-free (ECF) bleaching processes, at up to 91 ISO brightness. Therefore, EPA did not consider ECF bleaching as a technology option for this segment, because, while technically available and economically achievable, it was not the best such technology for this segment.

(ii) Ammonium-Based Sulfite Mills. The technology options considered for this segment were TCF bleaching and ECF bleaching. ECF bleaching is any process for bleaching pulps that does not employ elemental chlorine or hypochlorite. There are numerous variations of ECF bleaching processes. The ECF process considered for the ammonium-based segment includes peroxide-enhanced extraction.

(iii) Specialty Grade Sulfite Mills. The technology bases considered for this segment were TCF bleaching and ECF bleaching. The ECF process considered for the specialty grade segment includes oxygen- and peroxide-enhanced extraction.

(2) Selection of BAT Technologies. In evaluating and selecting BAT technologies for the segments in this subcategory, EPA considered the age, size, processes, other engineering factors, and non-water quality environmental impacts pertinent to Subpart E mills. None of these factors provided a basis for selecting different BAT technologies. For each segment, EPA selected the best technology available to produce the products in each segment. Each of the selected BAT technologies is economically achievable and has no unacceptable adverse non-water quality environmental impacts. See the Supplemental Technical Development Document, DCN 14487. The reasons discussed below also support EPA's decision to select the BAT model technology for each segment as the basis for PSES for that segment.

(i) Calcium-, Magnesium-, or Sodium-Based Sulfite Mills. As proposed, EPA has concluded that TCF bleaching is the

appropriate technology basis for BAT limitations for the calcium-, magnesium-, or sodium-based segment of the Papergrade Sulfite subcategory. (The following discussion also applies to PSES.) For this segment, TCF technology consists of oxygen- and peroxide-enhanced extraction, followed by peroxide bleaching, and with all chlorine-containing compounds eliminated (e.g., elemental chlorine, hypochlorite, chlorine monoxide, etc.). Although still TCF, the bleaching sequence is a change from proposal, when TCF bleaching was based on an oxygen stage with peroxide addition, followed by a peroxide bleaching stage. This change to the TCF bleaching sequence reflects the more common approach to TCF bleaching within this segment of the Papergrade Sulfite subcategory and also reflects the technology basis of the mill from which TCF performance data have been collected. EPA also included pulp cleaning to ensure that existing product quality specifications would continue to be achieved. EPA has selected this technology because it is technically available and economically achievable for mills in this segment.

In evaluating the technical availability of TCF processes for this segment, EPA developed a database of mills in the United States and Europe that produce pulp using TCF bleaching technology. There is at least one mill in the United States and 13 in Europe using acid cooking liquors of calcium, magnesium, or sodium sulfite that are using TCF bleaching processes. Among them, these mills produce a full range of paper products at up to 91 ISO brightness using TCF bleaching. These mills are able to produce the same products using TCF technology that they produced prior to converting to TCF, with no negative impact on product quality. EPA has incorporated pulp cleaners as an element of TCF technology to ensure that pulp quality requirements are maintained. See the Supplemental Technical Development Document, DCN 14487. For these reasons, EPA concluded that TCF bleaching is technically available for the calcium-, magnesium-, or sodium-based segment. See the record at section 21.2.1. (As noted above, EPA has established a separate segment for specialty grade sulfite mills using these cooking liquors.)

In order to evaluate the economic achievability of TCF bleaching for this segment, EPA considered the costs that existing mills would incur to convert to TCF processes. However, costs for secondary biological treatment systems have not been included because these systems already are in place at direct discharging mills. (This is true for the other papergrade sulfite segments as well.) As part of that analysis, EPA also included the costs of complying with today's BMP regulations. Because of the small size of this segment, EPA is not disclosing here the estimated capital costs, operation and maintenance costs, or post-tax annualized costs for this segment in order to protect confidential business information. However, EPA has determined that no mills are projected to close and no firms are projected to fail as a result of today's BAT limitations and PSES for this segment. This result obtains both when the impacts of today's BAT/PSES are considered together with the impacts of compliance with the MACT I costs, and when they are considered alone. Therefore, EPA has concluded that TCF bleaching is economically achievable for the calcium-, magnesium-, or sodium-based sulfite pulp segment. See DCN 14376 and DCN 14388 (both CBI).

For these reasons, EPA has selected the model TCF bleaching processes described above as the basis for BAT limitations and PSES for the calcium-, magnesium-, or sodium-based sulfite pulp segment.

(ii) Ammonium-Based Sulfite Mills. EPA had proposed BAT based on TCF bleaching technology for all mills in the Papergrade Sulfite subcategory, including those mills using ammonium-based acidic cooking liquor. EPA received comments and data challenging the applicability of TCF bleaching to ammonium-based sulfite mills. After reviewing these comments and data, EPA concluded that TCF bleaching is not demonstrated and may not be feasible for the full range of products produced by ammonium-based sulfite mills in the United States. See DCN 14497, Vol. I. (The following discussion also applies to PSES for this segment.)

This conclusion is based primarily on the greater difficulty in bleaching ammonium-based sulfite pulps (especially those pulps derived from softwood) without the use of chlorine-containing compounds compared to other sulfite pulps, and the inability to maintain product specifications for certain products within this segment using TCF bleaching. TCF bleaching has not been demonstrated for products with a high percentage of ammonium-based sulfite pulp that also require low dirt count and high strength. Laboratory scale data submitted by a firm producing such products indicate that such products can be produced with elemental chlorine-free (ECF) technologies. See DCN 14497, Vol. I, DCN 14494, and DCN 14118 in the record at Section 21.11.3.

Therefore, for papergrade sulfite mills using an acidic cooking liquor of ammonium sulfite, EPA is promulgating BAT limitations and PSES based on an ECF bleaching technology. The technology basis for BAT limitations for this segment is use of dioxin- and furan-precursor-free defoamers, complete (100 percent) substitution of chlorine dioxide for elemental chlorine, peroxide-enhanced extraction, and elimination of hypochlorite. ECF bleaching also includes high shear mixing to ensure adequate mixing of pulp and bleaching chemicals. This technology basis reflects the results of laboratory trials showing the ability to produce the full range of products manufactured by mills in the ammonium segment, with acceptable final product characteristics. See the record at section 30.11, DCN 14497, Vol. I, and DCN 14494. (The only exception is specialty grade sulfite mills using ammonium cooking liquors.)

EPA is also promulgating voluntary alternative BAT limitations and PSES based on TCF bleaching processes in order to encourage mills to use this technology whenever it is consistent with their product mix. See 40 CFR 430.54(a)(2) and 430.56(a)(2). Alternative TCF limitations are also available for new sources in this segment.

In addition to finding that the ECF bleaching process described above is technically available for the ammonium-based segment, EPA has also determined that it is economically achievable. In order to evaluate the economic achievability of ECF bleaching for this segment, EPA considered the costs that existing mills would incur to convert to the ECF process under consideration. As part of that analysis, EPA also included the costs of complying with today's BMP regulations. Because of the small size of this segment, EPA is not disclosing here the estimated capital costs, operation and maintenance costs, or post-tax annualized costs for this segment in order to protect confidential business information. However, EPA has determined that no mills are projected to close and no firms are projected to fail as a result of today's BAT limitations and PSES for this segment. This result obtains both when the impacts of today's BAT/PSES are considered together with the impacts of compliance with the MACT I costs, and when they are considered alone. Therefore, EPA has concluded that ECF bleaching is economically achievable for the ammonium-based segment. See DCN 14376 and DCN 14388 (both CBI).

For the foregoing reasons, EPA has selected the model ECF bleaching processes described above as the basis for BAT limitations and PSES for the ammonium-based segment.

(iii) Specialty Grade Sulfite Mills

EPA received comments and data indicating that key pulp and product characteristics for specialty grade sulfite pulps have not been achieved using TCF bleaching technologies. Firms producing specialty grade pulps indicate that required product characteristics are achievable using certain ECF bleaching technologies. See the record at sections 19.1 and 21.11.6; DCN 25502; DCN 20071a8; DCN 14497, Vol. I; and DCN 14494. As indicated in the July 1996 Notice, EPA has continued to monitor research efforts of specialty grade pulp producers in the field of pollution-preventing process changes. These research efforts have progressed to the point where data are available at this time to promulgate limitations for this segment for dioxin, furan, and chlorinated phenolic pollutants. For specialty grade sulfite mills, the technology basis for limitations is use of dioxin- and furan-precursor-free defoamers, complete (100 percent) substitution of chlorine dioxide for elemental chlorine, oxygen- and peroxide-enhanced extraction, and elimination of hypochlorite. ECF bleaching also includes high shear mixing to ensure adequate mixing of pulp and bleaching chemicals. This technology basis reflects the results of laboratory trials showing the ability to produce the full range of products manufactured by specialty grade mills, with acceptable final product characteristics. (This discussion also applies to PSES for this segment.)

EPA is also promulgating voluntary alternative BAT limitations based on TCF bleaching processes in order to encourage mills to use this technology whenever it is consistent with their product mix. See 40 CFR 430.54(a)(3) and 430.56(a)(3). Alternative TCF limitations are also available for new sources in this segment.

In addition to finding that the ECF bleaching process described above is technically available for the specialty grade segment, EPA has also determined that it is economically achievable. In order to evaluate the economic achievability of ECF bleaching for this segment, EPA considered the costs that the one mill currently in this segment would incur to convert to ECF processes. As part of that analysis, EPA also included the costs of complying with today's BMP regulations. Because of the small size of this segment, EPA is not disclosing here the estimated capital costs, operation and maintenance costs, or post-tax annualized costs for this segment in order to protect confidential business information. However, EPA has determined that the sole existing mill in this segment is not projected to close, nor is its firm projected to fail, as a result of today's BAT limitations and PSES for this segment. This result obtains both when the impacts of today's BAT/PSES are considered together with the impacts of compliance with the MACT I costs, and when they are considered alone. Therefore, EPA has concluded that ECF bleaching is economically achievable for the specialty grade segment. See DCN 14376 and DCN 14388 (both CBI).

For the foregoing reasons, EPA has selected the model ECF bleaching process described above as the basis for BAT limitations and PSES for the specialty grade segment.

(3) Pollutant Parameters Regulated for Each Segment. (i) Calcium-, Magnesium-, or Sodium-Based Sulfite Mills. Because the Agency is promulgating BAT effluent limitations for this segment based on TCF bleaching technology, the maximum reduction in the discharge of chlorinated pollutants from bleaching operations will be achieved. This is because no chlorine or chlorine-containing bleaching chemicals are used and, hence, no chlorinated pollutants are generated during bleaching. For this reason, EPA is not setting effluent limitations for dioxin, furan, chloroform, or the 12 specified chlorinated phenolic pollutants for TCF bleaching. However, EPA is setting limitations on AOX (expressed as a level below the Minimum Level identified in today's analytical method for AOX) for mills in the calcium-, magnesium-, or sodium-based sulfite pulp segment of the Papergrade Sulfite subcategory in order to reflect the performance of TCF bleaching processes. See 40 CFR 430.54(a)(1). EPA is reserving promulgation of COD limitations for this segment until such time that sufficient performance data are available because the performance of the BAT technology basis on this parameter cannot be accurately predicted from laboratory-scale data.

(ii) Ammonium-Based Sulfite Mills. EPA is promulgating effluent limitations for dioxin, furan, and 12 chlorinated phenolic pollutants for the ammonium-based segment. See 40 CFR 430.54(a)(2). EPA is reserving promulgation of chloroform limitations, AOX limitations, and COD limitations for this segment until such time that sufficient performance data are available because the performance of the BAT technology basis on these parameters cannot be accurately predicted from laboratory-scale data. One mill is currently installing, on a full scale, the promulgated BAT technology basis. EPA expects to have data to develop chloroform, AOX, and COD limitations for this segment once this installation is complete, the mill is operating the new equipment in a routine manner, and appropriate samples are collected and analyzed.

(iii) Specialty Grade Sulfite Mills. EPA is promulgating effluent limitations for dioxin, furan, and 12 chlorinated phenolic pollutants for the specialty grade segment, based on laboratory scale data. See 40 CFR 430.54(a)(3). EPA is reserving promulgation of chloroform, AOX, and COD limitations for this segment until such time that sufficient full scale performance data are available because the performance of the BAT technology basis on these parameters cannot be accurately predicted from laboratory scale data.

(4) Costs. As discussed in the July 1996 Notice, EPA revised its cost estimates for mills in the Papergrade Sulfite subcategory by using the revised bleaching sequences outlined in paragraph (2) above. EPA also updated equipment cost curves and unit operating costs. See 61 FR at 36845. The detailed basis of these revised cost estimates are provided in the record.

The following cost estimates reflect the total costs that mills in the Papergrade Sulfite subcategory are likely to incur as a result of today's BAT limitations, PSES, and BMP regulations, and are the bases for EPA's economic impact analyses discussed in paragraph (2) above. For this subcategory, EPA's estimated capital costs are $73.8 million, operation and maintenance costs are $7 million, and post-tax annualized costs are $9.8 million. (The general and administrative costs discussed in Section VIII.B.1.c are already included here.) See Section VIII for additional discussion of costs and economic impacts.

(5) Effluent Reductions. EPA has updated the calculation of effluent reductions for each papergrade sulfite mill, adjusting the baseline to mid-1995. EPA used methodology similar to that used for the Bleached Papergrade Kraft and Soda subcategory. As a result of the BAT limitations and PSES promulgated today, EPA estimates that for the Papergrade Sulfite subcategory, discharges of dioxin and furan will be reduced by seven grams to less than one gram per year. (EPA expects no discharges of dioxin and furan from TCF bleaching.) Total discharges of chlorinated phenolic pollutants will be

reduced by 1,770 kilograms to 240 kilograms per year. As a result of the TCF limitations and PSES on mills in the calcium-, magnesium-, or sodium-based sulfite segment and as an incidental result of implementing the ECF model technology by direct and indirect discharging mills in the other two segments, discharges of AOX will be reduced by 4,010 metric tons to 370 metric tons per year. For a discussion of the environmental benefits resulting from these reductions, see Section VIII.G.2, and Chapter 8 of the Economic Analysis, DCN 14649.

(6) Development of Limitations. All of the limitations and standards promulgated today for Subpart E are expressed as ''<ML.'' ''ML'' is an abbreviation for the Minimum Level identified in § 430.01(i) for the analytical methods that EPA uses to measure pollutant levels. For a more detailed discussion of ML limitations, see section VI.B.5.a.(4)(c).

In addition to the new effluent limitations guidelines and standards for each papergrade sulfite segment promulgated today and discussed immediately below, mills in the Papergrade Sulfite subcategory continue to be subject to existing limitations for pentachlorophenol and trichlorophenol. See 40 CFR 430.54(b), 430.55(c), 430.56(b), 430.57(b). These mills continue to have the opportunity to be exempt from these limitations and standards if they certify to the permitting or pretreatment authority that they are not using these chemicals as biocides. *Id.* For a discussion of these pollutants, see Section VI.B.3.f.

(i) Calcium-, Magnesium-, or Sodium-Based Sulfite Mills. Limitations for this segment were developed based on data from sampling at a European papergrade sulfite facility. (EPA did not set limitations based on performance data from the TCF U.S. mill in this segment because that mill produces sulfite pulp using hardwood furnish, which is easier to bleach than softwood sulfite pulp.) AOX was not measured at the end-of-pipe at the European facility so the AOX limitation is based on the transfer of data collected at the bleach plant effluent within that facility. This transfer is appropriate because the technology basis for the limitations, TCF bleaching, reduces AOX to concentrations below the method minimum level prior to any potential biological wastewater treatment. Therefore, since AOX is not detected above the minimum analytical level in bleach plant effluent, it should not be detected in final treated effluent.

(ii) Ammonium-Based Sulfite Mills. EPA is promulgating limitations for dioxin, furan, and 12 chlorinated phenolic pollutants for this segment. These limitations are expressed as ''<ML.'' EPA based these limitations on industry-developed laboratory data for ECF bleaching trials supplied by an ammonium-based papergrade sulfite mill and the results from full-scale sampling at a magnesium-based sulfite mill using ECF bleaching technology. EPA was able to apply the data from the magnesium-based sulfite mill to the ammonium-based segment because ECF bleaching at magnesium-based mills will result in similar wastewater characteristics as ECF bleaching at ammonium-based mills because ECF bleaching chemistry is comparable between the two chemical bases. EPA is reserving AOX, COD, and chloroform limitations for this segment.

(iii) Specialty Grade Sulfite Pulps. EPA is promulgating limitations for dioxin, furan, and 12 chlorinated phenolic pollutants. These limitations are expressed as ''<ML.'' The chlorinated phenolic limitations for this segment were developed from laboratory data for an ECF bleaching trial supplied by a specialty-grade sulfite mill. Data for dioxin and furan were not collected as part of this ECF bleaching trial because the mill researchers fully expected, based on the body of previous ECF bleaching research performed on sulfite pulp, that dioxin and furan would not be detected and therefore did not need analysis. For the purpose of establishing limitations for dioxin and furan in this segment, EPA is transferring laboratory data for ECF bleaching trials supplied by an ammonium-based papergrade sulfite mill. The transfer of limitations for dioxin and furan to this segment is supported by published reports that ECF bleaching of sulfite pulp will result in values of dioxin and furan in bleach plant effluent at levels below the minimum levels identified for the appropriate analytical methods. The transfer is further supported by the low levels of AOX measured (0.253 kg/ODMT) in the bleaching effluent from the specialty grade, laboratory-scale ECF bleaching trial. This AOX level suggests minimal chlorinated organics are formed during ECF bleaching of specialty grade pulp. For these reasons, EPA does not expect dioxin and furan to be present at or above the minimum level for these pollutants and is setting the limitations accordingly. EPA is reserving AOX, COD, and chloroform limitations for this segment until it has sufficient data upon which to base the limitations, because the performance of the BAT technology basis on these parameters cannot be accurately predicted from laboratory scale data.

(7) Point of Compliance Monitoring. EPA is requiring mills in the ammonium-based sulfite and specialty grade sulfite segments to demonstrate compliance with the BAT limitations on dioxin, furan, and the 12 chlorinated phenolic pollutants inside the discharger's facility at the point where the wastewater containing those pollutants leaves the bleach plant. See 40 CFR 430.54(c). EPA bases this decision on the reasons discussed in Section VI.B.5.a(6) for the Bleached Papergrade Kraft and Soda subcategory. Unless otherwise determined by the permit writer, mills in the calcium-, magnesium-, and sodium-based sulfite segment may demonstrate compliance with the BAT limitations for AOX at the end of the pipe.

c. NSPS. EPA is promulgating new source performance standards for each segment of the Papergrade Sulfite subcategory. See 40 CFR 430.55. The technology bases of NSPS for toxic and nonconventional pollutants for the three segments of the Papergrade Sulfite subcategory are the same as the model BAT technologies for those segments. For calcium-, magnesium-, or sodium-based sulfite mills, TCF bleaching technology is the technology basis for NSPS. ECF bleaching is the basis of NSPS for mills in the ammonium and specialty products segments because TCF bleaching has not been demonstrated for the full range of products made by mills in these segments. The toxic and nonconventional pollutants regulated, the limitations, and the points of compliance monitoring for NSPS for each segment are also the same as for BAT for those segments.

EPA proposed NSPS for conventional pollutants based on best demonstrated end-of-pipe secondary wastewater treatment. The treatment system with the lowest long-term average BOD_5 discharge was used to characterize the best demonstrated performance. EPA concluded that data in the record is not representative of the performance that can be achieved in the Papergrade Sulfite subcategory as a whole. For this reason, the new source performance standards for conventional pollutants promulgated today for each segment of the Papergrade Sulfite subcategory are the same as those promulgated in the 1982 NSPS regulation. See 47 FR 52006, 52036 (Nov. 18, 1982) (for former Subpart O); 48 FR 13176, 13177 (Mar. 30, 1983) (for former Subpart J).

In selecting its NSPS technology, EPA considered all of the factors specified in CWA section 306, including the cost of

achieving effluent reductions. The selected NSPS technologies are presently being employed at mills in each segment of this subcategory. Moreover, the cost of the NSPS technology is an insignificant fraction of the capital cost of a new mill (less than one percent). Finally, EPA has determined that the costs of including the selected NSPS technologies at a new source are substantially less on a per-ton basis than the costs of retrofitting existing mills. See Chapter 6 of the Economic Analysis document (DCN 14649). Therefore, EPA has concluded that such costs do not present a barrier to entry. The Agency also considered energy requirements and other non-water quality environmental impacts for the selected NSPS options and concluded that these impacts were no greater than for the selected BAT technology options and are acceptable. See the Supplemental Technical Development Document, DCN 14487. EPA therefore concluded that the NSPS technology bases selected for each segment of the papergrade sulfite segment constitutes the best available demonstrated control technology for that segment.

d. Pretreatment Standards. EPA is promulgating pretreatment standards for new and existing sources for three segments of the Papergrade Sulfite subcategory based on the BAT and NSPS technologies selected for each segment. In determining PSES, EPA considered the age, size, processes, other engineering factors, and non-water quality environmental impacts pertinent to Subpart E mills. None of these factors provided a basis for selecting different PSES technologies. For each segment, EPA selected the best technology available to produce the products in each segment. Each of the selected PSES technologies is economically achievable and has no unacceptable adverse non-water quality impacts. With respect to PSNS for these segments, EPA concluded that the selected technologies represent the best available demonstrated control technologies that are capable of producing each segment's products. EPA also concluded that there was no barrier to entry for the reasons set forth in section VI.B.6.c. above for NSPS for this subcategory.

In order to determine which pollutants to regulate under PSES and PSNS, EPA used the same pass-through analysis it employed for the Bleached Papergrade Kraft and Soda subcategory described in section VI.B.5.c(2) above. EPA concluded that dioxin, furan, and the 12 chlorinated phenolic pollutants pass through or interfere with POTW operations for the ammonium and specialty grade segments for the reasons set forth in section VI.B.5.c(2) for Subpart B. This reasoning applies because the BAT/PSES model technologies for Subparts B and E are both based on ECF process technologies; the same is also true for the NSPS/PSNS technologies (although in neither subpart does the model pretreatment technology include secondary biological wastewater treatment). Based on its pass-through determination, EPA is promulgating national pretreatment standards for new and existing sources for those pollutants for those segments. These standards are expressed as ''<ML.'' See Section VI.B.5.a(4)(c). With respect to chloroform, COD, and AOX in the ammonium and specialty grade segments of the Papergrade Sulfite subcategory, EPA has insufficient data at this time upon which to make pass-through determinations or to set pretreatment standards. Therefore, EPA will decide whether and how to regulate these pollutants for those segments when data become available.

For the calcium-, magnesium-, or sodium-based segment, the best available technology basis is TCF bleaching. Because no chlorine or chlorine-containing bleaching chemicals are used, no chlorinated pollutants are generated during bleaching. Therefore, EPA is not establishing pretreatment standards for dioxin, furan, chloroform, and the 12 chlorinated phenolic pollutants for this segment. With respect to AOX in the calcium-, magnesium-, or sodium-based segment, EPA finds that TCF bleaching will reduce AOX discharge loads from the 1 to 3 kg/metric ton typically found at baseline to less than minimum levels, even at indirect discharging facilities with no on-site biological treatment. This reduction is greater than 99 percent, which far exceeds the AOX reduction that can be demonstrated by POTW treatment. Therefore, EPA concludes that AOX passes through for this segment and is promulgating PSES and PSNS for AOX, with the limitation expressed as less than the minimum level, or ''<ML.'' See 40 CFR 430.56(a)(1) and 430.57(a)(1).

With respect to COD in the calcium-, magnesium-, or sodium-based segment, EPA has insufficient data at this time upon which to make a pass-through determination or to set pretreatment standards. Therefore, EPA will decide whether and how to regulate COD for this segment when data become available.

The pretreatment standards for all segments of the Papergrade Sulfite subcategory also include best management practices. See 40 CFR 430.03. These requirements are described below in Section VI.B.7.

EPA is requiring mills to demonstrate compliance with PSES and PSNS on dioxin, furan, and the 12 chlorinated phenolic pollutants for the ammonium-based sulfite and specialty grade sulfite segments inside the discharger's facility at the point where the wastewater containing those pollutants leaves the bleach plant. EPA bases this decision on the reasons discussed in Section VI.B.5.a(6) for the Bleached Papergrade Kraft and Soda subcategory.

7. Best Management Practices

The regulations promulgated today include provisions requiring mills with pulp production in the Bleached Papergrade Kraft and Soda subcategory (Subpart B) and the Papergrade Sulfite subcategory (Subpart E) to implement BMPs to prevent or otherwise contain leaks and spills of spent pulping liquor, soap, and turpentine and to control intentional diversions of those materials. These BMPs apply to direct and indirect discharging mills within these subcategories and are intended to reduce mill wastewater loadings of non-chlorinated toxic compounds and hazardous substances. For direct dischargers, EPA is authorized to establish BMPs for those pollutants under CWA section 304(e). The same BMPs will also remove, as an incidental matter, significant loadings of color and certain oxygen-demanding substances in pulping liquors that are not readily degraded by biological treatment. EPA also expects incidental reductions in conventional water pollutants and certain air pollutants as a result of the BMPs. To the extent these pollutants are present in the wastestreams subject to section 304(e), EPA has authority under that section to regulate them. In addition, EPA has independent authority under CWA sections 402(a) and 501(a) and 40 CFR 122.44(k) to require direct dischargers to implement BMPs for pollutants not subject to section 304(e). To impose these BMPs on indirect dischargers, EPA relies on section 307 (b) and (c). Finally, EPA is authorized to impose the BMP monitoring requirements under section 308(a).

EPA has determined that these BMPs are necessary because the materials controlled by these practices, if spilled or otherwise lost, can interfere with wastewater treatment operations and lead to increased discharges of toxic, nonconventional, and conventional pollutants. The practices included in this rule are known to reduce the amount of spent pulping liquor discharged to wastewater treatment

systems and to reduce the cost of process operation through increased chemical recovery. The BMPs summarized below are discussed in detail in the Technical Support Document for Best Management Practices for Spent Pulping Liquor Management, Spill Prevention and Control, DCN 14489 (hereafter ''BMP Technical Support Document'').

Under this regulation, mills must implement the BMPs codified at section 430.03(c). BMP requirements for new and existing direct dischargers apply when incorporated as special conditions in NPDES permits, consistent with CWA sections 304(e) and 402(a). BMP requirements for new and existing indirect dischargers are pretreatment standards; therefore, they are self-implementing. The BMPs are:

(1) Return of spilled or diverted spent pulping liquors, soap, and turpentine to the pulping and recovery processes to the maximum extent practicable as determined by the mill; recovery of such materials outside the process; or discharge of spilled or diverted material at a rate that does not disrupt the receiving wastewater treatment system;

(2) Inspection and repair programs to identify and repair leaking equipment items;

(3) Operation of continuous, automatic spill detection systems that the mill determines are necessary to detect and control leaks, spills, and intentional diversions of spent pulping liquor, soap, and turpentine. Examples of such systems are high level monitors and alarms on storage tanks; process area conductivity (or pH) monitors and alarms; and process area sewer, process wastewater, and wastewater treatment plant conductivity (or pH) monitors and alarms;

(4) Employee training for those personnel responsible for operating, maintaining, or supervising the operation and maintenance of equipment items in spent pulping liquor, soap, and turpentine service;

(5) Preparation of brief reports that evaluate spills of spent pulping liquor, soap, or turpentine that are not contained at the immediate process area and intentional diversions of spent pulping liquor, soap, or turpentine that are not contained at the immediate process area, (this requirement takes effect on the date an OMB control number is issued);

(6) A program to review any planned modifications to the pulping and chemical recovery facilities and any construction activities in the pulping and chemical recovery areas before these activities commence to prevent leaks and spills during construction;

(7) Secondary containment for spent pulping liquor bulk storage tanks. As an alternative, mills may substitute an annual tank integrity testing program, if coupled with other containment or diversion structures, in place of secondary containment;

(8) Secondary containment for turpentine bulk storage tanks;

(9) Curbing, diking, or other means of isolating soap and turpentine processing and loading areas from the wastewater treatment facilities; and

(10) Wastewater monitoring to detect leaks and spills, to track the effectiveness of the BMPs, and to detect trends in spent pulping liquor losses.

In addition, § 430.03(d) requires each mill to prepare a BMP Plan, based on a detailed engineering review of the mill's pulping and recovery operations, that specifies: (1) The procedures and the practices to be employed by the mill to meet the BMP requirements listed above, as tailored to recognize site-specific conditions; (2) the construction the mill determines is necessary to meet the BMP requirements, including a schedule for such construction; and (3) the monitoring program that will be used to meet the BMP requirements. This requirement takes effect April 15, 1999 see 40 CFR 430.03(j)(1)(i), or the date an OMB control number for this requirement is issued, whichever is later. See 40 CFR 430.03(a)(2).

Each mill must also certify to the appropriate permitting or pretreatment authority that it has prepared the Plan in accordance with the BMP regulation. See 40 CFR 430.03(f). The mill is not required to obtain approval of the BMP Plan by the permitting or pretreatment authority. *Id.* The permitting or pretreatment authority at its discretion, however, may conduct a review of the BMP Plan, BMP Plan amendments, and BMP Plan implementation.

Finally, section 430.03(h) requires mills to establish action levels (a measure of daily pollutant loading) that, when exceeded, trigger investigative and corrective action (depending on the action level exceeded) to reduce the wastewater treatment system influent mass loading. This requirement takes effect April 15, 1999 see 40 CFR 430.03.(j)(1)(iii), or the date an OMB control number for this requirement is issued, whichever is later. The purpose of the action levels is to provide a framework for monitoring the performance and effectiveness of BMPs on a continuing basis and to establish an early warning system so that mills can detect trends in spent pulping liquor, soap, and turpentine losses that might not be obvious from other sources. Under the regulation, a mill has considerable flexibility to choose its monitoring parameter. For more discussion of action levels, see the BMP Technical Support Document, DCN 14489. EPA had considered requiring all mills to employ specific statistical action levels. See 61 FR at 36847. EPA rejected this approach because it was concerned that such action levels might fail to trigger appropriate investigative and corrective actions for some mills, while being too restrictive for other mills. Instead, EPA determined that authorizing mills to choose their own monitoring parameters and to set their own action levels better accounts for the variability in organic loadings at different mills and differences in treatment plant effectiveness and evaporator capacity, among other mill-specific factors. This flexibility thus ensures that the action levels reflect the actual performance of mill-specific BMPs and procedures. In this way, EPA believes the action levels will better achieve the spill and leak control objectives of the BMP requirements. Exceedances of the action levels will not constitute violations of an NPDES permit or pretreatment standard. See 40 CFR 430.03(i)(3). However, a mill that fails to take corrective action as soon as practicable in response to the exceedances will be violating its NPDES permit or pretreatment standard. *Id.*

As set forth in § 430.03(j), the following deadlines apply: Existing indirect dischargers are required to prepare BMP Plans and implement all BMPs that do not require the construction of containment or diversion structures or the installation of monitoring and alarm systems no later than April 15, 1999. Operation of any new or upgraded continuous, automatic monitoring systems that the mill determines to be necessary (other than those associated with construction of new containment or diversion structures) must commence no later than April 17, 2000. The mill must complete construction and commence operation of any spent pulping liquor, collection, containment, diversion, or other facilities, including any associated continuous monitoring systems, necessary to fully implement BMPs by April 16, 2001. Existing indirect dischargers must establish the initial action levels by April 15, 1999, and the revised action levels as soon as possible after fully implementing the BMPs, but not later than January 15, 2002. The requirements to develop the BMP Plan and to perform other record-keeping and reporting requirements do not apply until OMB has approved the associated

information collection request. See 40 CFR 430.03(a)(2).

NPDES permits must require existing direct discharging mills to meet the same deadlines specified for existing indirect dischargers which is calculated from the date of publication. See 40 CFR 430.03(j)(1). If the applicable deadline has passed at the time the NPDES permit containing the BMP requirement is issued, the NPDES permit must require immediate compliance with the BMP requirement. *Id*. EPA believes this is appropriate because the record shows that mills can implement the substantive requirements of the BMPs—which are well-known within the industry today—without significant uncertainty or difficulty. In addition, timely implementation will avert the adverse environmental effects of uncontrolled leaks, spills, and intentional diversions. Finally, the affected mills have been on notice for several years that these requirements would likely be imposed and therefore should not be prejudiced by prompt compliance obligations. EPA expects that the compliance date for full implementation of the BMP requirements will not extend beyond five years from the effective date of the final rule because EPA expects NPDES permits for those mills to be reissued on a timely basis. With the exception of the requirement to establish action levels, which must occur not later than 12 months after commencing discharge, new direct and indirect discharging mills must prepare the BMP Plan and implement all BMPs upon commencing discharge. See 40 CFR 430.03(j)(2).

EPA believes it is reasonable to require existing indirect dischargers to establish revised action levels by January 15, 2002 and to require all new sources to establish action levels no later than 12 months after commencing discharge. These requirements apply only after full implementation of the required BMPs and reflect the amount of time EPA believes is necessary for mills to collect monitoring data regarding the effectiveness of these newly implemented practices and to perform the statistical analysis to develop the required action levels. Because the required action levels are intended to reflect normal mill operating conditions using the BMPs, they cannot be established prior to the implementation of the BMPs or, in the case of new sources, prior to commencing discharge. For a discussion of EPA's basis for the other deadlines in this rule, see the BMP Technical Support Document, DCN 14489.

The proposed regulations had included provisions for leak and spill prevention, containment, and control through the use of BMPs. See 58 FR at 66078. The comments received by EPA on the proposed rule and subsequent **Federal Register** notices generally supported the use of BMPs, but a number of comments challenged EPA's compliance cost estimates and claimed that certain requirements were too prescriptive. In particular, industry asserted:

- The requirement to develop BMPs should be limited to spent pulping liquor (e.g., kraft black liquor, sulfite red liquors) and should exclude kraft green and white liquors and fresh sulfite pulping liquors;
- The proposed regulation was overly prescriptive in general and, in particular, the requirement for secondary containment was unnecessary to meet the objectives of the proposed regulation;
- EPA underestimated the costs for implementing BMPs;
- EPA lacks the authority to establish BMPs to control pollutants that are not identified as toxic under CWA section 307(a) or hazardous under CWA section 311; and
- EPA lacks the authority to impose BMPs on indirect dischargers.

In response to comments, EPA undertook several initiatives to understand industry's concerns about the proposed BMP requirements; to better understand the status of the industry with respect to pulping liquor management and spill prevention and control; and to better assess the BMP compliance costs. To supplement its understanding of industry's spent pulping liquor management and spill prevention and control practices, EPA visited more than 25 chemical pulp mills in the United States and 15 mills in Canada and Europe following its 1993 proposal. These mills included bleached and unbleached kraft mills and papergrade sulfite mills (see Docket Sections 21.5.1 and 21.5.3). EPA also reviewed the results of the NCASI BMP questionnaire distributed to the industry. Questionnaire responses were received from approximately 70 bleached and unbleached kraft, soda, and sulfite mills. Through this NCASI questionnaire EPA received a substantial amount of additional information about mill practices and costs for equipment, monitoring systems, and facility modifications (see Docket Section 21.1.3). In addition, EPA held detailed discussions with stakeholders regarding options for BMPs and associated costs. Much of this information was included in the Docket and made available to the public in conjunction with the Notice of Data Availability published in the **Federal Register** on July 5, 1995 (60 FR 34938). Additional information related to development of the BMP requirements, including changes in the wording and organization of the proposed rule, was discussed in the July 1996 Notice. See 61 FR at 36835.

Based on the information and data received since proposal, EPA revised the scope of the BMP requirements to focus on control of spent pulping liquor, turpentine, and soap. The BMP requirements were restructured to allow greater flexibility in how BMPs are implemented to address site-specific circumstances in achieving meaningful prevention and control of leaks and spills. EPA also reorganized the regulatory text from that presented in the record for the July 1996 Notice to provide greater ease of use by mill operators and permit writers, and to clarify the intent of particular BMP requirements. The most significant changes since proposal are discussed below.

In December 1993, EPA proposed BMPs for seven subcategories of the pulp, paper, and paperboard industry (58 FR at 66078), all of which chemically pulp wood and non-wood fibers. EPA still believes BMPs are appropriate for each of these chemical pulping subcategories; however, to be consistent with the effluent limitations guidelines and standards promulgated in this final rule, the BMPs promulgated today are applicable only to the Bleached Papergrade Kraft and Soda and Papergrade Sulfite subcategories. EPA expects to promulgate BMPs for the remaining five chemical pulping subcategories [(Subparts A (Dissolving Kraft), C (Unbleached Kraft), D (Dissolving Sulfite), F (Semi-chemical), and H (Non-wood Chemical Pulp)] as it promulgates new effluent limitations guidelines and standards for these subcategories. Until new regulations for Subparts A, C, D, F, and H are promulgated, permit writers may wish to use the BMP regulations in this rule as a guide to issuing permits containing BMPs based on best professional judgment for mills with production covered by these other subparts. See CWA Section 402(a)(1); 40 CFR 122.44(k). POTWs may need to impose BMPs as local limits to facilities in these subcategories. See 40 CFR 403.5.

The BMP provisions in the proposed rule were structured to apply to all pulping liquors. In response to comments, EPA has revised the scope of the BMPs and for the final rule is limiting the BMP applicability to spent pulping liquors, turpentine, and soap. EPA has determined that spent pulping

liquors contain toxic components and that these materials, if uncontrolled, pass through or interfere with the operation of POTWs and may interfere with industrial wastewater treatment systems at mills that discharge directly to surface waters. EPA has excluded green, white and other intermediate pulping liquors (e.g., fresh sulfite pulping liquors) from this BMP rule because the data in the record does not indicate that these materials pass through wastewater treatment systems. Turpentine and soap are included in the BMP rule because, if spilled or lost, these materials can interfere with wastewater treatment operations and lead to increased discharges of toxic, nonconventional, and conventional pollutants.

In December 1993, EPA proposed to require mills to provide secondary containment for all pulping liquor bulk storage tanks. EPA has since determined that spill prevention can be adequately achieved for spent pulping liquor bulk storage tanks by substituting annual tank integrity testing and other containment or diversion structures (e.g., curbs and berms) in place of secondary containment. The final rule provides flexibility for mills to choose either secondary containment or annual tank integrity testing, coupled with other containment or diversion structures, to comply with this requirement for spent pulping liquor bulk storage tanks. See 40 CFR 430.03(c)(7). EPA determined that secondary containment should be required at all times for turpentine bulk storage tanks because of the extreme toxic effects a turpentine spill would have on the biological treatment system, and because the size of turpentine bulk storage tanks is such that secondary containment is easily achieved. In fact, EPA has found that most mills already provide secondary containment for their turpentine bulk storage tanks. No secondary containment is required for soap bulk storage tanks.

As discussed in the July 1996 Notice, EPA also proposed adding a requirement to the BMP regulation that would require mills to implement a monitoring program for the purpose of detecting leaks and spills, tracking the effectiveness of the BMPs, and detecting trends in spent pulping liquor losses. EPA proposed requiring mills to monitor wastewater treatment system influent for a short-term measure of organic content that can be completed on a daily basis (e.g., Chemical Oxygen Demand (COD) or Total Organic Carbon (TOC)). EPA has promulgated this requirement (see 40 CFR 430.03 (h) and (i)), but in response to comments, EPA is also allowing mills to use an alternative parameter related to spent pulping liquor losses that can be measured continuously and averaged over 24 hours (e.g., specific conductivity or color). See 40 CFR 430.03(h)(2)(i). In conjunction with this monitoring, mills are required by today's regulation to establish action levels (using the measure of daily pollutant loading) that, when exceeded, trigger investigative and corrective action, as appropriate, to reduce the wastewater treatment system influent mass loading. See 40 CFR 430.03(h).

The proposed rule would have required certification of the BMP plan by a registered professional engineer (P.E.) and approval by the mill manager. The intent of the proposed P.E. certification was to assure preparation of a comprehensive BMP Plan that is tailored to the site-specific circumstances at the mill. Industry commented that many mills have no registered professional engineers on site. For mills without a P.E. onsite, the proposed requirement would result in the plan being certified by someone not involved with the mill on a daily basis, and someone not responsible for its operation. EPA has determined that requiring certification by a P.E. is unnecessarily prescriptive and may have unintended results. The final regulation deletes the requirement for certification by a registered P.E. and now requires the BMP Plan to be reviewed by the senior technical manager at the mill and approved and signed by the mill manager. See 40 CFR 430.03(f).

The regulation was proposed to be self-implementing for both direct and indirect dischargers. EPA has revised the regulation to make it clear that BMPs imposed on direct dischargers are not self-implementing, but rather apply only when incorporated into NPDES permits. See 40 CFR 430.03(j). This is consistent with CWA sections 304(e) and 402. The final regulation remains self-implementing for indirect dischargers. *Id*.

The final regulation extends compliance schedules for plan preparation and plan implementation to grant more time for the preparation of the initial BMP Plan and installation of monitoring and alarm systems. Based on information supplied by industry regarding the time required in past efforts to develop spill prevention programs, EPA determined that 12 months was reasonable to complete the development of the BMP Plan and includes that deadline in the regulation. Similarly, EPA determined that it is reasonable to require mills to commence operation of any new monitoring systems no later than 24 months following publication of the final rule. This compliance date provides sufficient time between BMP Plan preparation and operation of new monitoring systems (i.e., 12 months) to allow implementation of BMPs in a rational and effective manner.

The final BMP regulation is less prescriptive than proposed with regard to inspection, repair and log-keeping requirements. While many of the elements included in the proposed rule remain, EPA determined that the specificity of the language in the proposed regulation could be redundant to existing practices in place at some mills and be unnecessarily burdensome. EPA believes the language in the final rule will achieve the same results as it intended in the proposed rule while allowing mills to use existing maintenance and repair tracking systems to fulfill the requirement. See 40 CFR 430.03(c).

As discussed in the July 1996 Notice, EPA used the information obtained since proposal to revise its cost estimates for BMPs. See 61 FR at 36840. At proposal, EPA's estimated costs were based on the reported total project costs for two older bleached kraft mills to install spill prevention and control systems. After adjusting the costs to reflect the size of a ''typical'' mill, EPA then assumed that these costs reflected the average cost incurred by bleached papergrade kraft and soda and papergrade sulfite mills to install BMPs. EPA then imputed to some mills compliance costs less than that average cost depending on the extent EPA judged they had implemented BMPs (see Technical Support Document for Proposed Best Management Practices Programs: Pulping Liquor Management, Spill Prevention and Control, November 1993. Docket Section 17.4, DCN 08307).

EPA improved its estimates of industry-wide costs for compliance with the BMP requirements in the final rule, compared to the cost methodology used for the proposed regulation. These changes were discussed in the July 1996 Notice and in the accompanying Draft Technical Support Document for Best Management Practices Programs: Spent Pulping Liquor Management, Spill Prevention and Control, May 1996 (DCN 13894). EPA's supplemental mill visits and the NCASI survey responses have resulted in a more accurate status of the existing BMP infrastructure and programs at mills. This information was used to create model BMP mill requirements for each level of mill complexity and to classify mills by complexity level. EPA then used data

provided by the industry in comments and the NCASI survey to develop unit costs for major equipment items, facility modifications, monitoring systems and BMP Plan preparation, rather than using the total project costs reported by two mills as was done at proposal. Finally, EPA incorporated the estimates of net operating and maintenance costs of BMPs into the BAT/PSES cost model. The cost model tracked the impacts of increased pulping liquor recovery on the evaporators and chemical recovery system and determined the need for equipment upgrades resulting from the combined effect of BAT/PSES process changes and BMPs. The savings from reduced load on the wastewater treatment system and increased recovery of fiber, chemicals and energy were subtracted from the BMP operating costs (i.e., increased evaporation energy, tank integrity testing, operator training, and O&M costs for new equipment).

EPA disagrees with comments asserting that EPA lacks authority to establish BMPs for pollutants that are not identified as toxic under CWA section 307(a) or hazardous under CWA section 311. First, the non-toxic and non-hazardous pollutants controlled by these BMPs are found in the same wastestreams bearing pollutants specifically identified as toxic pollutants or hazardous substances under sections 307(a) and 311 and implementing regulations. Although reductions of these pollutants are significant in environmental effect, their control is incidental to the control of all the pollutants subject to section 304(e). Second, EPA has independent authority under section 402(a)(1) to establish NPDES permit conditions, including BMPs, for any pollutant when such conditions are necessary to carry out the provisions of the statute. See 40 CFR 122.44(k). This authority operates independently of section 304(e). Indeed, when Congress enacted section 304(e) specifically for toxic pollutants and hazardous substances, it acknowledged that section 402(a)(1) already provided authority for imposing BMPs in NPDES permits. See Statement of Sen. Muskie (Dec. 15, 1977), reprinted in Legislative History of the Clean Water Act of 1977, at 453. EPA's authority to establish permit conditions under section 402(a)(1) is very broad. See *NRDC* v. *Costle*, 568 F.2d 1369, 1380 (D.C. Cir. 1977). EPA has determined that mills without an adequate BMP program, such as that codified today, may experience undetected and uncontrolled leaks and spills that could disrupt the efficiency of their treatment systems, thus resulting in exceedances of the BAT limitations and NSPS promulgated today for subparts B and E. Moreover, the BMPs control pollutants that are not explicitly regulated under BAT and NSPS. Therefore, EPA determined that BMPs applicable to all pollutants in a mill's spent pulping liquor, turpentine, and soap were necessary in order to carry out the purposes of the Clean Water Act and hence are authorized under section 402(a)(1) and 40 CFR 122.44(k). Similarly, as discussed below, BMPs are authorized as pretreatment standards for pollutants in the spent pulping liquor, turpentine, and soap when they pass through or interfere with POTW operations.

Some commenters also objected to EPA's decision to establish the BMP program by regulation rather than deferring to the case-by-case determinations of permit writers. EPA agrees that a requirement to establish and implement BMPs of the type required by this rule could be imposed on a case-by-case basis under CWA section 402(a)(1) and 40 CFR 122.44(k). However, EPA rejected this approach for a number of reasons. First, section 304(e) expressly authorizes EPA to promulgate BMPs by regulation on a categorical basis. The spent pulping liquors, soap, and turpentine covered by these BMPs contain numerous toxic pollutants and hazardous substances subject to section 304(e) and hence may be controlled by regulation. Moreover, EPA determined that implementing the BMP program by regulation is necessary to ensure that each pulp and paper mill with pulp production in subparts B or E implements the type of BMPs that EPA has determined are fundamental to an effective BMP program for this industry. While the BMP regulation is intended to provide considerable flexibility to mills in designing their BMP programs, EPA has also determined that the various BMPs specified in the regulation are necessary to assure uniform and fair application of the requirements. Finally, EPA believes that the regulation represents an appropriate and efficient use of its technical expertise and resources that, when exercised at the national level, will relieve permit writers of the burden of implementing this aspect of the Clean Water Act on a case-by-case basis.

EPA also disagrees with comments asserting that EPA lacks authority to impose BMPs on indirect discharges. These BMPs are pretreatment standards under section 307(b) and (c). Pretreatment standards for new and existing sources under section 307 are designed to prevent the discharge of pollutants that pass through POTWs or that interfere with or are otherwise incompatible with treatment processes or sludge disposal methods at POTWs. To determine whether pollutants associated with spent kraft and sulfite pulping liquors, soap, and turpentine that are indirectly discharged by mills with pulp production in subparts B or E interfere with POTW operations or pass through untreated, EPA reviewed data collected from 1988 through 1992 at a POTW that receives effluent from a bleached papergrade kraft mill. Prior to 1990–91, the mill had virtually no facilities for control and collection of spent pulping liquor leaks and spills. POTW discharge monitoring records show the fully treated effluent exhibited consistent chronic toxicity to Daphnia from April 1988 until June 1991. The data further show that the toxic effects of the POTW's effluent have been reduced since implementation by the mill of effective spent pulping liquor management and spill prevention and control. These effluent toxicity effects can be related to the wood extractive components that are measurable by COD and are found in leaks and spills of spent kraft and sulfite pulping liquors that interfere with the performance of biological treatment systems and allow toxic pollutants to pass through inadequately treated. Indeed, evidence of such interference and pass-through was found in data from this mill and the POTW, which showed higher mass effluent loadings for COD, TSS and BOD_5 before the mill implemented a BMP program. After the BMP program was implemented, mass effluent loadings of these pollutants were reduced. Data for COD, in particular, indicated that short-term interference of POTW operations previously observed at higher COD levels was being mitigated. EPA also bases its pass-through finding on an incident occurring in 1993 at a different mill where an intentional diversion of spent pulping liquor debilitated the mill's secondary treatment system and killed fish in the receiving waters. These data led EPA to conclude that inadequate management and control of leaks and spills of spent pulping liquor, soap, and turpentine interfered with POTW operations and caused pass-through of pollutants. Because direct discharging mills using these BMPs achieve very high removals and because POTWs cannot achieve similar removals in the absence of BMPs employed by the indirect discharger, EPA has determined that pollutants in spent pulping liquor, soap, and turpentine, in the absence of controls on leaks, spills, and intentional diversions, can cause disruption and interference and do indeed pass through

at POTWs. For this reason, EPA is including as part of its pretreatment standards the requirement that indirect discharging mills implement BMPs in accordance with this regulation.

8. Regulatory Implementation for Effluent Limitations Guidelines and Standards

a. Applicability of Effluent Limitations Guidelines and Standards. Effluent limitations act as a primary mechanism to control discharges of pollutants to waters of the United States. These limitations are applied to individual mills through NPDES permits issued by EPA or authorized States under section 402 of the CWA. In addition, the pretreatment standards are directly applicable to indirect dischargers. Once today's regulations become effective, the effluent limitations and standards for the appropriate subcategory must be applied in all Federal and State NPDES permits issued to direct dischargers affected by this rule. See Section 301(b)(2), 402(a). This section describes the applicability of these limitations and standards to process and other wastewaters generated by the mills in the Bleached Papergrade Kraft and Soda and Papergrade Sulfite subcategories, defines new sources subject to today's NSPS and PSNS, defines non-continuous dischargers and the applicable limitations, and describes the retention of the previously promulgated limitations and standards.

(1) Applicability of Limitations to Process and Other Wastewaters. The effluent limitations guidelines and standards for the pulp and paper industry apply to discharges of process wastewaters directly associated with the manufacturing of pulp and paper. See 40 CFR 430.00. EPA proposed a definition of process wastewater as any water that, during manufacturing or processing, comes into direct contact with or results from the production or use of any raw material, intermediate product, finished product, byproduct, or waste product. The proposed definition specifically included boiler blowdown; wastewaters from water treatment and other utility operations; blowdown from high rate (e.g., greater than 98 percent) recycled non-contact cooling water systems to the extent they are mixed and co-treated with other process wastewaters; and stormwaters from the immediate process areas to the extent they are mixed and co-treated with other process wastewaters. The proposed definition specifically provided that contaminated groundwaters from on-site or off-site groundwater remediation projects would not be process wastewaters. EPA proposed to require separate permitting for the discharge of such groundwaters. The proposed definition also specifically excluded certain process materials from the definition of process wastewater. These process materials included: Green liquor at any liquor solids level; white liquor at any liquor solids level; black liquor at any liquor solids level resulting from processing knots and screen rejects; black liquor after any degree of concentration in the kraft or soda chemical recovery process; reconstituted sulfite and semi-chemical pulping liquors prior to use; any pulping liquor at any liquor solids level resulting from spills or intentional diversions from the process; lime mud and magnesium oxide; pulp stock; bleach chemical solutions prior to use; and papermaking additives prior to use (e.g., alum, starch and size, clays and coatings). The proposed regulation then would have prohibited the discharge of these materials into POTWs or waters of the United States without an NPDES permit or other authorization.

In this final rule, EPA is promulgating a definition of process wastewater applicable to subparts B and E. In response to the comments opposing the exclusion of these process materials, EPA revised the proposed definition of process wastewaters to eliminate the exclusion of the named process materials. See 40 CFR 430.01(m). The proposed language would have effectively required ''closed cycle'' mills, which was not EPA's intent. The exclusion of contaminated groundwater has been retained. Because the quantity and quality of such groundwaters are likely to be highly variable on a site-specific basis, the Agency concluded that their discharge to surface waters should be regulated separately from, or in addition to, process wastewaters on a case-by-case basis. EPA also has included leachate wastewaters from landfills owned and operated by mills generating wastes associated with manufacturing or processing subject to subparts B and E, where these leachate wastewaters are commingled with other process wastewaters. These leachate wastewaters typically comprise a very small proportion of the total volume received in end-of-pipe wastewater treatment facilities. In cases where the volumes or pollutants found in leachate wastewaters are of concern, permit writers may develop individual permit limitations on a case-by-case basis. EPA's definition continues to define process wastewater in terms of manufacturing or processing. EPA has promulgated a subcategory-specific definition of process wastewater in order to clarify the applicability of subparts B and E and to assist permit writers and pretreatment authorities in developing limitations and standards. The effluent limitations guidelines and standards promulgated today do not apply to discharges that are not associated with manufacturing or processing. Any mill wishing to discharge such wastewaters would need to obtain authorization in an NPDES permit or individual control mechanism administered by a POTW.

EPA's use of the term ''during manufacturing or processing'' should not be taken to exclude wastewaters generated during routine maintenance, including maintenance occurring during a scheduled temporary mill shut-down. Maintenance wastewaters were not explicitly excluded from the definition of process wastewater at proposal, nor are they excluded from the definition promulgated today. Wastewaters generated during routine maintenance are a result of pulp manufacturing processes and as such are included in the definition of process wastewater.

(2) Definition of New Source. In today's rule, EPA is promulgating a definition of ''new source'' applicable to Part 430, subparts B and E. See 40 CFR 430.01(j). This definition restates the definition set forth in 40 CFR 122.29(b)(1), but with the additional reference to certain process changes that, in and of themselves, would not cause a mill to become a new source. See 40 CFR 430.01(j)(2). EPA intends that permit writers will consult the specific ''new source'' criteria in Part 430, rather than the more general criteria set forth in 40 CFR 122.29(b)(1) and 403 when determining whether pulp and paper mills subject to subparts B or E are new sources. The other provisions of 40 CFR 122.29 continue to apply to these subparts, as do 40 CFR 122.2 and 40 CFR 403.3(k). The definition of ''new source'' in Part 430 does not affect the definition of ''new source'' for purposes of the NESHAP portion of these integrated rules.

EPA is aware that application of the definitions in Part 122 to pulp and paper mills in the Bleached Papergrade Kraft and Soda and Papergrade Sulfite subcategories has sometimes caused controversy, leading to disagreement between the permitting authority and the facility whether a particular change at the mill triggers NSPS or PSNS. EPA is promulgating a definition of ''new source'' specifically for subparts B and E in order to set forth the specific factors relevant to a new source determination for covered mills and thus, EPA hopes, to end the disputes regarding a mill's

new source status. Indeed, the decision to promulgate subcategory-specific criteria in this rule is specifically contemplated by the general criteria codified at 40 CFR 122.29(b)(1). EPA believes this tailored definition is particularly important in view of the Voluntary Advanced Technology Incentives Program EPA is also promulgating today for subpart B mills. Through the Voluntary Advanced Technology Incentives Program, EPA is encouraging mills to install new process technologies and even to redesign bleach plant operations in order to achieve effluent reductions beyond those required at the baseline BAT level. EPA does not want existing mills that voluntarily choose to participate in the Voluntary Advanced Technology Incentives Program to be required to meet NSPS simply as a consequence of that election. Therefore, by promulgating a definition of ''new source'' specifically for subparts B and E, EPA hopes not only to clarify application of the Part 122 definitions but also to provide certainty to subpart B mills choosing to participate in the Voluntary Advanced Technology Incentives Program that they will not inadvertently become a new source, which would subject them to compulsory NSPS.

For the convenience of the permit writer, the definition of new source being codified in part 430 restates the three criteria already codified in § 122.29(b)(1). The first criterion provides that a source is a new source if it is constructed at a site at which no other source is located. Section 430.01 (j)(1)(i); see 40 CFR 122.29(b)(1)(i). As applied to part 430, this criterion is intended to ensure that a greenfield mill is characterized as a new source and hence is subject to NSPS or PSNS.

The second criterion specified in today's definition of new source incorporates the language of 40 CFR 122.29(b)(1)(ii) with two additions. First, it provides that a fiber line that totally replaces an existing fiber line is a new source (unless that fiber line is enrolled in the Voluntary Advanced Technology Incentives Program). Second, it includes a list of modifications that would not trigger the new source definition if made by subpart B or E mills. See 40 CFR 430.01(j)(1)(ii) and (2). This criterion provides essentially that a fiber line that is modified to comply with baseline BAT effluent limitations or that is totally rebuilt to comply with Advanced Technology BAT limitations is not a new source. (A fiber line is a series of operations employed to convert wood or other fibrous raw material into pulp. If the final product is bleached pulp, the fiber line encompasses pulping, de-knotting, brownstock washing, pulp screening, centrifugal cleaning, and multiple bleaching and washing stages.)

Among the changes specified in the regulation that alone do not cause an existing fiber line at a mill to be considered a new source are: Upgrades of existing pulping operations; upgrades or replacement of pulp screening and washing operations; installation of extended cooking and/or oxygen delignification systems or other post-digester, pre-bleaching delignification systems; and bleach plant modifications including changes in methods or amounts of chemical applications, new chemical applications, installation of new bleaching towers to facilitate replacement of sodium or calcium hypochlorite, and installation of new pulp washing systems. 40 CFR 430.01(j)(2)(i)–(iv). By expressly excluding these process modifications from the new source definition, EPA thus allows a mill to implement the baseline BAT/PSES technologies without triggering NSPS or PSNS. EPA believes that interpreting process modifications that are designed to achieve compliance with baseline BAT/PSES limitations as an existing source modification is consistent with Congress' intentions in the Clean Water Act concerning the respective roles of standards for existing and new sources.

As discussed in more detail below in connection with the third new source criterion, EPA believes it is appropriate to define a new fiber line as a new source because the construction of the new fiber line (whether to supplement or replace an existing fiber line) presents the type of pollution prevention opportunities customarily represented by NSPS. However, EPA believes it is also appropriate to treat the replacement fiber line as an existing source if that fiber line is enrolled in the Voluntary Advanced Technology Incentives Program. See 40 CFR 430.01(j)(2)(v). EPA has decided to do this because requiring the new fiber line to meet baseline NSPS requirements would defeat the purpose of the Voluntary Advanced Technology Incentives Program by undercutting the more environmentally protective pollution prevention opportunities and limitations associated with that program. In the first place, Advanced Technology BAT limitations at the Tier II and Tier III levels are more stringent than the baseline NSPS requirements; EPA's definition of new source thus is intended to allow mills to commit to greater pollutant reductions than EPA could otherwise compel and to do so incrementally while maintaining use of the existing fiber line in the interim. Similarly, the Advanced Technology BAT limitations at the Tier I level promote pollution prevention opportunities not necessarily assured by NSPS, even though the technology bases for NSPS and Tier I are similar. EPA has established different limitations for Tier I than for NSPS because the regulations are intended to achieve different objectives. The new source performance standards for AOX are more stringent because, as a statistical matter, EPA determined that this performance level reflects the best demonstrated performance by mills using the NSPS technology. The Tier I limitations for AOX, in contrast, are intended to reflect a more inclusive performance level that EPA believes existing mills employing extended delignification can achieve, in order to encourage more mills to implement extended delignification technologies. The Tier I limitations also require the recycle of filtrates to the recovery systems and impose limitations on the lignin content of unbleached pulp, which EPA hopes will promote the use of particular pollution prevention technologies and, in turn, encourage mills to look beyond Tier I to the Tier II and Tier III levels. This goal contrasts with the objective of NSPS, which simply is to compel mills to achieve certain discharge levels by any combination of technologies the mill selects, and would be defeated if the definition of new source would have the effect of moving Tier I mills into NSPS. Therefore, EPA has decided that, on balance, imposing NSPS on mills that replace fiber lines for the purpose of participating in the Voluntary Advanced Technology Incentives Program would discourage rather than encourage the long-term goal of achieving even greater environmental performance.

The third criterion appearing in the definition of new source in § 430.01(j)(1)(iii) is identical to the third criterion at § 122.29(b)(1)(iii), and provides that a source is a new source if its processes are substantially independent of an existing source at the same site. In determining whether processes are substantially independent, the permitting or pretreatment authority is directed to consider such factors as the extent to which the new facility is integrated with the existing plant, and the extent to which the new facility is engaged in the same general type of activity as the existing source. For example, if a mill operating in the Bleached Papergrade Kraft and Soda subcategory builds and operates an entirely new fiber line that permanently

supplements the capacity of an existing fiber line (and also, incidentally, increases the total quantity of pollutants discharged by the mill), the new fiber line would be considered a new source subject to NSPS.

EPA believes it is appropriate to subject a new fiber line that is substantially independent of an existing fiber line to new source performance standards because a mill designing that new fiber line has pollution prevention opportunities akin to those available to greenfield mills. For example, a mill would have the opportunity to incorporate pollution prevention principles when designing a new fiber line, including a new flow scheme and water balance. This new fiber line would provide the opportunity to take advantage of pollution prevention savings attributable to reduced chemical needs (and costs), increased energy recovery, the possibility of improving yield, and other operation and maintenance improvements.

EPA notes that a fiber line that is substantially independent of an existing fiber line is a new source even if the new fiber line is enrolled in the Voluntary Advanced Technology Incentives Program. EPA believes that this is appropriate because the supplemental fiber line increases both the mill's production capacity and its discharge of pollution to the environment. However, the fiber line could qualify for incentives if it is enrolled in the Voluntary Advanced Technology Incentives Program for NSPS at the Tier II or Tier III level.

As reflected in the July 1996 Notice, 61 FR at 36848, EPA had considered excluding from the definition of new source those mills that renovated existing fiber lines but remained at existing production levels. In response to comments, EPA has decided not to introduce production levels as a factor in determining new source status. First, taking production levels into account in determining whether an existing source becomes a new source would be a departure from current practice that EPA believes is not justified in this case. EPA believes that the new source status of a subpart B or E mill should be determined by the degree of process and production changes made at a mill's fiber lines—such as the replacement of existing digesters and bleach plants with new equipment—because those changes, not production levels, present the real opportunities for pollution prevention represented by NSPS or PSNS. Moreover, EPA agrees with comments stating that mills subject to subpart B or E frequently undergo changes in various degrees to increase production levels and that many of these changes do not result in or from substantially independent facilities or the total replacement of existing facilities. See DCN 25538 at 70–72. Therefore, the mere fact that a mill increases its production levels does not mean that it concurrently has the opportunity to install the type of advanced pollution prevention technologies represented by NSPS.

(3) Non-Continuous Discharger. EPA is changing the regulatory language defining non-continuous dischargers as it applies to subparts B and E. See 40 CFR 430.01(k)(2). EPA is also republishing, without change, the current definition of non-continuous dischargers because it continues to apply to the other subparts in part 430 and to the determination of technology-based effluent limitations on conventional pollutants for existing dischargers subject to subpart B or E. See 40 CFR 430.01(k)(1).

EPA had proposed a new definition that would have defined as a non-continuous discharger a mill that stored wastewaters for periods of at least 24 hours and that released that wastewater on a batch basis. In the final definition applicable to subparts B and E, EPA is retaining the storage component of the proposed (and existing) regulation but is not specifying a minimum 24-hour storage period because EPA determined that it had no particular significance for these subparts. However, as indicated in the July 1996 Notice, 61 FR at 36842, EPA is adding language defining as a non-continuous discharger a discharger that releases stored wastewater on a variable flow or a pollutant loading rate basis. Finally, in this new definition, EPA is clarifying that it applies to storage or release of wastewaters required by the permitting authority for the purpose of protecting receiving water quality, among other purposes. See 40 CFR 430.01(k)(2). For subparts B and E only, EPA also is eliminating the requirement in the existing regulation, at 40 CFR 430.01(c) (1996 ed.), for the NPDES authority to include maximum day and maximum 30-day average concentration limitations consistent with BPT, BCT, or NSPS limitations as appropriate. See 40 CFR 430.01(k). EPA will defer to the NPDES authority to establish maximum day and maximum 30-day average limitations that are necessary to protect receiving water quality. In later final rulemaking phases (see section II, table II–2), EPA intends to adopt for remaining subcategories the same definition for non-continuous dischargers as is being promulgated today for subparts B and E.

(4) Retention of Previously Promulgated Effluent Limitations Guidelines and Standards. As discussed in more detail in Section VI.B.2, EPA is not revising BPT or BCT effluent limitations for conventional pollutants for subparts B and E. Therefore, EPA is retaining the previously promulgated limitations for these pollutants and subparts. See 40 CFR 430.22, 430.23, 430.52, 430.53.

EPA is also retaining previously promulgated NSPS for subparts B and E because new sources that commenced operation prior to the effective date of today's NSPS remain subject to the earlier standards for ten years beginning on the date construction of the new source was completed. CWA section 306(d); see 40 CFR 430.25(a), 430.55(a).

Finally, as discussed in more detail in Section VI.B.3.f, subparts B and E include previously promulgated end-of-pipe effluent limitations guidelines and standards for pentachlorophenol and trichlorophenol. EPA is also retaining the accompanying provisions authorizing mills that do not use those chemicals as biocides to certify this fact to the permitting or pretreatment authority with the result that they would not be subject to those limitations or standards. *Id.*

In addition to today's new regulations for subparts B and E, EPA is recodifying the previously promulgated BPT, BCT, BAT, NSPS, PSES and PSNS for the other subparts of the pulp, paper, and paperboard category. These limitations regulate the discharges of BOD_5, TSS, zinc, and other analytes. Although EPA is reorganizing the former subcategories in accordance with the new subcategory designations, EPA is not changing these limitations and standards. See Section VI.B.1.

b. Determination of Effluent Limitations for Permits. (1) Definition of Production and Production-Normalizing Parameters. The Agency has based some of the effluent limitations guidelines and standards promulgated today on pollutant concentrations. Others are mass-based, that is, normalized on the basis of an appropriate measure of production. Limitations and standards for AOX, chloroform, BOD_5, and TSS fall into this category.

This appropriate measure of production is known as the ''production-normalizing parameter.'' The current definition of ''production-normalizing parameter'' is annual off-the-machine production (including off-the-machine coating, where applicable) of pulp, paper, and/or paperboard, divided by the number of operating days that year. Most paper and paperboard production is measured at the off-the-

machine moisture content, while market pulp is measured as air-dry metric tons (10 percent moisture). EPA is not changing this definition of production as it applies to the effluent limitations and standards for any subcategory in Part 430 other than subparts B and E. EPA is also retaining the existing definition of production for the NSPS for conventional pollutants being promulgated today for subpart B and subpart E. See 40 CFR 430.01(n)(1).

However, EPA is codifying a new definition of production for the AOX and chloroform limitations being promulgated today for subparts B and E. See 40 CFR 430.01(n)(2). Under the new specialized definition, the production-normalizing parameter to be used by permit writers in calculating mass-based limitations for chloroform and AOX is air-dried metric tons of brownstock pulp (10 percent moisture) entering the bleach plant at the stage during which chlorine or chlorine-containing compounds are first applied to the pulp. In the case of bleach plants that use totally chlorine-free bleaching, the production-normalizing parameter used to calculate mass-based limitations shall be air-dried metric tons of brownstock pulp (10 percent moisture) entering the first stage of the bleach plant from which wastewater is discharged. *Id*. Production, in turn, is defined as the annual unbleached pulp production that enters the bleach plant (at ten percent moisture) divided by the number of operating days of the bleach plant. *Id*.

The Agency had proposed to change the current definition of production in part 430 by adding the following statement: ''Production in each of the foregoing cases shall be determined for each mill based upon the highest annual production in the past five years divided by the number of operating days that year.'' See 58 FR at 66189. EPA has decided not to revise the definition to include a new time basis because EPA is not revising the current BPT and BCT effluent limitations guidelines at this time for subparts B and E. Codifying a new time basis for determining production of AOX and chloroform would have required permit writers to apply different time bases for determining production for purposes of calculating BAT limitations and limitations for conventional pollutants. In EPA's view, this would have unduly complicated the permitting process. In addition, for NSPS, introducing a time basis would be illogical because new sources do not have five years of data from which to determine the one highest year.

(2) Determination of Permit Limitations for Multiple Subcategory Mills. For facilities with multiple point source categories, subcategories, and segments, the appropriate guidelines for each category, subcategory (or subpart), and segment are used to determine a single permit limit for each pollutant. Chapter 5 of the U.S. EPA NPDES Permit Writers' Manual (EPA–833–B–96–003, December 1996) provides guidance in determining permit limits in situations when the effluent guidelines for one subcategory regulates a different set of pollutants than the effluent guidelines applicable to another subcategory. For mill subject to today's rule, this situation may arise in setting permit limits for AOX when the mill has production in multiple subcategories.

For pollutants regulated today at the bleach plant (i.e., dioxin, furan, chlorinated phenolic pollutants, and chloroform, and, for subpart B PSES/PSNS, AOX), EPA does not believe that multiple guidelines will be relevant. The bleach plant is unlikely to be used for more than one subcategory (or segment in subpart E), and thus, the permit limit will be determined by the limitations and standards for a single subcategory (or segment).

There may be instances where a pollutant is regulated under the limitations and standards promulgated today and the permitting authority also wishes to establish limits for that particular pollutant have yet to be established. For example, the permitting authority might need to use best professional judgment to determine end-of-pipe limits for AOX for a mill with production not only in subpart B or E (for which AOX limitations are being promulgated today) but also in another subpart (for which no AOX limitations have been promulgated) that generates AOX. In these instances, the permitting authority would use best professional judgment to develop pollutant limits for wastestreams and pollutants not covered by today's rulemaking and apply those limits to determine a proper permit limitation for the mill.

Following promulgation of today's rules, EPA will develop and publish additional guidance for the pulp and paper industry for determining permit limitations for facilities with production in multiple categories, subcategories, and segments.

c. Compliance With Effluent Limitations. (1) Compliance Demonstration for In-Plant Limitations. The effluent limitations and standards that the Agency is promulgating today for dioxin, furan, chloroform, the 12 chlorinated phenolic pollutants and AOX will be applied (depending on the subcategory and segment) to the total discharge from each physical bleach line operated at the mill. At most mills, wastewaters from acid and alkaline bleaching stages are discharged to separate sewers. At some mills, however, bleach plant wastewaters are discharged to a combined sewer containing both acid and alkaline wastewaters.

For dioxin, furan, and chlorinated phenolic compounds, compliance with the effluent limitations and standards can be demonstrated by collecting separate samples of the acid and alkaline discharges and preparing a flow-proportioned composite of these samples, resulting in one sample of bleach plant effluent for analysis. However, in determining the limitations, EPA used data from acid and alkaline bleach plant effluents that had been analyzed separately. (EPA also used data from combined sewers.) In a comment on Method 1653 (DCN 20095 A8), the commenter reported problems in achieving the Minimum Level in Method 1653 for samples of composited acid and alkaline filtrates. If necessary to achieve the Minimum Level, EPA recommends that the facility test the effluents separately for reliable determination of the chlorophenolics, TCDD, and TCDF.

For chloroform, however, separate samples and analyses of all bleach plant filtrates discharged separately are required to prevent the loss of chloroform through air stripping as the samples are collected, measured, and composited or through chemical reaction when the acid and alkaline samples are combined. If separate acid and alkaline sewers do not exist, compliance samples must be collected from the point closest to the bleach plant that is or can be made physically accessible.

(2) Compliance with ML Limitations. In today's rulemaking for the Bleached Papergrade Kraft and Soda subcategory, EPA is establishing limitations and standards for 12 chlorinated phenolic pollutants and dioxin, and alternative TCF limitations and standards for AOX, that are expressed as less than the Minimum Level (''<ML''). See 40 CFR 430.24, 430.25, 430.26, 430.27. For various segments of the Papergrade Sulfite subcategory, EPA is establishing limitations and standards for AOX, chlorinated phenolic pollutants, dioxin, and furan that are also expressed as ''<ML.'' See 40 CFR 430.54, 430.55, 430.56, 430.57. Henceforth, this discussion refers to these limitations and standards as ''ML limitations''. The ''ML'' is an abbreviation for the Minimum Level identified today in § 430.01(i) for the analytical methods that EPA used to determine the level of

pollution reduction achievable for these pollutants through the use of BAT, NSPS, PSES and PSNS technologies for these subparts. (Section VI.B.5.a(4) provides a detailed discussion about ML limitations.) EPA intends for mills subject to ML limitations to have pollutant discharges with concentrations less than the Minimum Levels of the analytical methods specified today in § 430.01(i).

Compliance with the ML limitation for an analyte can only be demonstrated by using the method specified in § 430.01(i) for that analyte, or other methods approved in 40 CFR Part 136 that have Minimum Levels equal to or less than the minimum level specified today in § 430.01(i). Mills are not authorized under this rule to demonstrate compliance with an ML limitation codified today by using an analytical method with a minimum level above the Minimum Level specified in § 430.01(i).

The Minimum Level specified for each method is the lowest level at which calibration is performed. See 40 CFR 430.01(i). Laboratories calibrate their equipment by using standards (i.e., samples at several known concentrations of each analyte). Calibration is necessary because laboratory equipment does not measure concentrations directly. Rather, the equipment generates signals or responses from analytical instruments that must be converted to concentration values. The calibration process establishes a relationship between the signals and the known concentration values of the standards. This relationship is then used to convert signals for samples with unknown concentrations.

In the calibration process, one of the standards will have a concentration value at the Minimum Level for each analyte. Because the minimum levels are the lowest levels for which laboratories calibrate their equipment, measurements below the Minimum Level are to be reported as being ''less than Minimum Level,'' or ''<ML''.

Often, laboratories report values less than minimum levels to be ''not detected'' or ''<ML.'' In some cases, however, the laboratories report these values as if the values were quantified. For example, if the Minimum Level specified in § 430.01(i) is 10 ppq, the laboratory might report a measurement that is 4 ppq. Such reported values might occur in two situations. In the first situation, the laboratory could have used the method specified in § 430.01(i), but referred to the measurement as ''detected'' although it was less than the Minimum Level. The second situation could occur in the future as the analytical methods become more sensitive than the methods specified in § 430.01(i). Using such future methods could conceivably allow laboratories to reliably measure values less than today's minimum levels. Such measurements resulting from either situation would be considered to demonstrate compliance with the ML limitations, because these measurements are less than the method ML specified in § 430.01(i).

When monitoring for compliance with this final rule, a sample-specific Minimum Level greater than the method Minimum Level will not demonstrate compliance with an ML limitation. Such sample-specific Minimum Levels may result from sample volume shortages, breakage or other problems in the laboratory, or from failure to properly remove analytical interferences from the sample. EPA believes that all of these situations can be avoided by careful adherence to sample collection and laboratory analysis procedures. For example, in the Agency's long-term variability study, some of the one-liter jars that were sent to laboratories for analysis were not filled to capacity. In this example, adjustments to the Minimum Levels could have been avoided if a sufficient volume of sample had been collected by filling the one-liter jars to capacity, or by using larger or extra jars. Mill personnel should collect sufficient volume to allow for analysis of the entire sample volume specified in the method and for dilutions, re-analyses, or other problems that may occur. In addition, it is often possible for the laboratory to adjust for extraction of smaller sample volumes by further concentrating the resulting extracts prior to analysis.

Table VI–11 provides some examples demonstrating compliance with the ML limitations. In these examples, the method ML specified in § 430.01 is 10 ppq.

TABLE VI–11.—EXAMPLES DEMONSTRATING COMPLIANCE WITH ML LIMITATIONS

Is concentration reported as ''detected'' or ''non-detected'' in the sample?	Value reported by laboratory (ML in these examples is 10 ppq)	Does the sample demonstrate compliance?	Explanation for compliance determination
Detected	4 ppq	Yes	4 ppq is less than the ML specified in § 430.01.
Detected	10 ppq	No	Compliance is demonstrated only with measurements less than the ML specified in § 430.01.
Detected	11 ppq	No	The measured value is greater than the ML specified in § 430.01.
Non-detected	<5 ppq	Yes	<5 ppq is less than the ML of 10 ppq specified in § 430.01.
Non-detected	<10 ppq	Yes	Compliance is demonstrated for all values less than the ML specified in § 430.01.
Non-detected	<11 ppq	No	The sample-specific ML must be less than the ML of 10 ppq specified in § 430.01.

(3) AOX at Calcium-, Magnesium-, or Sodium-Based Sulfite Mills. The AOX limitation for calcium-, magnesium-, or sodium-based papergrade sulfite mills is expressed as less than the Minimum Level (ML) of the analytical method. As discussed in section VI.B.6, this AOX limitation is based on transfer of data collected at the bleach plant effluent to the end-of-pipe for BAT. EPA received comments asserting that this transfer of data does not account for potential sources of AOX other than the bleach plant. Examples of these potential sources of AOX include the release of AOX from purchased pulp used in papermaking, the use of chlorinated compounds for control of biological growth on paper machines, chlorine use in water treatment, and bleaching colored broke in the stock preparation area. Hypochlorite is also used in deinking processes to strip color from post-consumer waste.

AOX contributions from deinking operations are not covered by this rule and would be addressed in developing appropriate permit limitations as described in VI.B.8.b(2) above. AOX contributions due to chlorine use in treating process water supplies are not taken into account in the development of limitations and standards for the calcium-, magnesium-, or sodium-based

sulfite pulp segment. In cases where other sources of AOX, such as paper machines, make the end-of-pipe AOX limitations in this rule impractical or infeasible for the purpose of assessing the contribution of AOX from bleach plant sources, the AOX limitation may be imposed on internal waste streams (i.e., bleach plant effluent) before mixing with other waste streams containing AOX. See 40 CFR 122.45(h).

(4) Minimum Monitoring Frequencies. (a) Rationale for Establishing Minimum Monitoring Frequencies. EPA proposed specific minimum monitoring frequencies for pollutants in bleach plant and end-of-pipe effluent discharges. See 58 FR at 66189. Although EPA proposed minimum monitoring requirements for BOD_5 and TSS limitations established as part of NSPS, EPA is not specifying such requirements in the final rule because permit authorities have ample experience regulating these pollutants and can determine the appropriate monitoring frequencies. See Section VI.A.3 for a discussion of BOD_5 monitoring requirements under today's air rule. See also Section VI.B.7 for a discussion of monitoring requirements associated with BMPs.

The final rule specifies minimum monitoring frequencies for AOX, dioxin, furan, chloroform, and chlorinated phenolic pollutants for non-TCF mills because of the nature and composition of the discharges from non-TCF bleached papergrade kraft and soda and papergrade sulfite mills. See 40 CFR 430.02 (a) and (b). Wastewaters from these mills have been found to contain chlorinated organic compounds that are highly toxic and bioaccumulative (e.g., dioxin, furan, and chlorinated phenolic pollutants). Process-related variability in generating these pollutants is clearly reflected in available data. Therefore, given the environmental significance of these pollutants, minimum monitoring is both necessary and appropriate to ensure that data are available to permitting authorities to have an adequate basis to verify compliance with the technology-based effluent limitations and standards. In contrast to discharges of BOD_5 and TSS, receiving water effects from discharges of these chlorinated pollutants are not as easily detected, are not as well understood, and do not manifest themselves in a manner that enables a mill to quickly become aware of and react to releases that may be harmful to the environment.

The monitoring requirements imposed in 40 CFR 430.02 will not take effect until EPA has obtained approval of these information collection requirements from the Office of Management and Budget (OMB) under the Paperwork Reduction Act, 44 U.S.C. 3501, *et seq.* For monitoring requirements applicable to direct dischargers, EPA will seek to amend the NPDES Discharge Monitoring Report ICR No. 229, OMB approval number 2040–0004, prior to its expiration on May 31, 1998. For indirect dischargers, EPA will seek to add specified monitoring requirements for indirect dischargers to the National Pretreatment Program ICR No. 2, OMB approval number 2040–0009, when it expires on October 31, 1999. EPA will not seek to amend this ICR prior to its expiration date because the monitoring requirements for indirect dischargers do not become effective until April 16, 2001 for existing indirect dischargers, and EPA anticipates no new indirect dischargers commencing discharge prior to the ICR expiration date.

(b) Duration of Minimum Monitoring Frequency. The final rule includes minimum monitoring frequency requirements for demonstrating compliance with limitations and standards for dioxin, furan, chloroform, the 12 chlorinated phenolic pollutants, and AOX for non-TCF mills. See 40 CFR 430.02(a). Permitting and pretreatment authorities retain authority to specify more frequent monitoring on a case-by-case basis and must specify AOX monitoring frequency for TCF mills on a best professional judgment basis. The minimum monitoring frequencies are applicable to mills in Subparts B and E for a duration of five years after inclusion in NPDES permits for direct dischargers. See 40 CFR 430.02(b). For existing indirect dischargers, the minimum monitoring requirements apply until April 17, 2006 which reflects a five-year monitoring period following the termination of the three-year compliance period authorized by CWA Section 307(b)(1). *Id.* For new indirect dischargers, the five year minimum monitoring period commences upon operation. *Id.*

EPA has determined the minimum monitoring frequencies established by this rule are necessary to demonstrate compliance with the effluent limitations guidelines and standards promulgated today, particularly considering the degree of change that is expected to occur to pulping and bleaching processes as this rule is implemented. In establishing the minimum monitoring frequencies for the regulated pollutants, the Agency has struck a balance between the cost of the monitoring regimen and the need to ensure that sufficient data are consistently available to permitting authorities to provide an adequate basis to verify compliance with the effluent limitations and standards and to mills to quickly become aware of and react to releases that may be harmful to the environment.

The Agency has selected a minimum monitoring frequency of once per month for dioxin, furan, and chlorinated phenolic pollutants. See 40 CFR 430.02(a). These pollutants are the most toxic and bioaccumulative among those regulated yet also are the most costly to analyze (total cost of approximately $1,325 per sample; $825 per sample for dioxin, furan, and $500 per sample for all 12 chlorinated phenolic analytes). EPA expects that 12 data points for each pollutant per year, together with daily end-of-pipe AOX data and information on process conditions from detailed mill logs (e.g., unbleached pulp kappa numbers, bleach plant kappa factors, bleached pulp brightness, etc.) that are reviewable upon request, will yield a meaningful basis for establishing compliance with the promulgated limitations through long-term trends and short-term variability in dioxin, furan, and chlorinated phenolic pollutant discharge loading patterns.

The Agency has selected a minimum monitoring frequency of once per week for chloroform. See 40 CFR 430.02(a). This minimum monitoring frequency has been selected because data available indicate there can be considerable temporal variability of this pollutant in bleach plant wastewaters. Therefore, more data are required to adequately assess compliance with the promulgated limitations and standards on both a long-term and short-term basis. While the cost for laboratory analysis of chloroform (approximately $270 per sample) is much lower than for dioxin, furan, and chlorinated phenolic pollutants, chloroform sampling requirements are more extensive and rigorous (e.g., sampling of all bleach plant filtrates using special equipment and containers to prevent volatilization). Weekly data (52 data points) and information on process conditions from detailed mill logs that are reviewable upon request are expected to yield an adequate basis for establishing long-term compliance trends in chloroform discharge loadings and developing process control strategies to ensure the short-term compliance in chloroform discharge loadings.

The Agency has selected a minimum monitoring frequency of once every day for AOX for non-TCF mills. See 40 CFR 430.02(a). This minimum monitoring frequency has been selected because there can be considerable daily variability in chlorinated organic discharge loadings to receiving streams

reflecting both bleach plant discharge patterns and secondary biological treatment system performance that is readily measured at reasonable cost. At this time, AOX analysis costs $120 per sample. This cost is likely to decrease after this regulation is promulgated with increased capacity at commercial laboratories and analytical laboratories on-site at many mills. While this bulk parameter measures all chlorinated organic constituents in wastewater and not individual pollutants, daily monitoring will provide an essentially continuous data stream on a quick turnaround basis to mill operating personnel and permit compliance authorities to assess and control process technologies and manage the performance of end-of-pipe biological treatment systems.

The minimum monitoring frequencies in this rule as described above will provide sufficient information to evaluate mill compliance with the promulgated limitations over the long term and allow permitting and pretreatment authorities to judge whether a different frequency of monitoring is warranted after the initial compulsory period of minimum monitoring has been completed. These data will prove useful to permitting authorities and also to mill operators in developing a robust mill-specific compliance data base with which to analyze the effects of mill processes on effluent trends. The five-year duration of the minimum monitoring requirements is consistent with permit issuance cycles, will ease administrative burdens on operators and permitting authorities, and will provide data useful for establishing appropriate monitoring requirements during future permit renewals.

Following completion of the compulsory five-year monitoring period set forth by this rule, the permitting or pretreatment authority has discretion to adjust monitoring requirements as deemed appropriate on a case-by-case basis. For those mills consistently demonstrating reductions superior to those required merely to comply with their permit requirements, EPA believes that it may be appropriate to allow less frequent monitoring to reduce the regulatory burden. EPA expects the permitting or pretreatment authority also to consider the mill's compliance and enforcement history in determining monitoring frequencies. This avenue for relief provides incentives for voluntary reductions of pollutant discharges through such means as reuse and recycling. EPA also expects permitting and pretreatment authorities to consider whether poor performance, compliance or enforcement history, or other site-specific factors indicate a need to impose more frequent monitoring than that specified in this rule.

EPA has issued interim guidance for performance-based reductions of NPDES permit monitoring frequencies, which may be useful for permit writers and pretreatment authorities in determining alternative monitoring frequencies at the close of the compulsory five-year period imposed by this rule. (See Interim Guidance for Performance-Based Reductions of NPDES Permit Monitoring Frequencies, April 1996, EPA–833–B–96–001). This document provides guidance to permit writers on implementing EPA's NPDES regulations regarding appropriate monitoring in permits and describes the conditions under which reduced monitoring would be justified. Pretreatment control authorities also may find this guidance useful in setting monitoring frequencies for industrial users of POTWs. The current guidance applicable to all industrial point sources is dated April 19, 1996, and is subject to revision.

(c) Certification for TCF Bleaching. Mills certifying in their permit application process that all bleaching processes are totally chlorine-free are exempted from the minimum monitoring frequencies established in this rule, provided that analytical data routinely submitted as part of the permit application confirm the absence of chlorinated compounds. See 40 CFR 430.02. EPA believes it is appropriate to exclude TCF mills from the minimum monitoring frequencies for chlorinated compounds since any process change that introduces chlorinated compounds to the bleaching process requires notification to the permitting authority and would result in reopening the permit for modification. See, e.g., 40 CFR 122.21(g)(3), 122.21(g)(7), and 122.41(l).

(d) ECF Certification in Lieu of Monitoring. In response to comments, EPA has considered whether certification of ECF bleaching processes can be used in lieu of monitoring. Because of the effect that operation and control of pulping and bleach plant processes have on generation of chlorinated pollutants, EPA has determined that the information available at this time does not demonstrate that ECF certification alone is sufficient to ensure compliance with the regulations promulgated today. Therefore, this rule does not allow certification of ECF bleaching to replace monitoring. (See DCN 14497, Vol. I, and section VI.B.5 of this preamble for a discussion of factors affecting chlorinated pollutant generation.)

Elsewhere in today's **Federal Register**, however, EPA is proposing to allow mills to demonstrate compliance with chloroform limitations by certifying that they use ECF bleaching processes and that these processes are operated in a manner consistent with certain process and related factors. In this notice, EPA also is seeking additional chloroform data, along with corresponding process data, to determine whether an ECF certification process for chloroform should require certification of certain process factors; for example, factors relating to residual lignin content, chemical application rates, and other process variables.

d. Intake Credits, Upsets, and Bypasses. An intake credit is an adjustment made to an effluent limitation to reflect the presence of a pollutant in the discharger's intake water beyond what is removed by an installed technology that would otherwise meet the technology-based effluent limitation or standard. EPA's regulations concerning intake credits are set forth at 40 CFR 122.45 and 40 CFR 403.15.

A ''bypass'' is an intentional diversion of waste streams from any portion of a treatment facility. An ''upset'' is an exceptional incident in which there is unintentional non-compliance with technology-based permit effluent limitations because of factors beyond the reasonable control of the permittee. EPA's regulations concerning bypasses and upsets are set forth at 40 CFR 122.41 (m) and (n).

e. Variances and Modifications to Permits. (1) Variances. Dischargers subject to the BAT and PSES limitations promulgated in these final regulations may apply for a Fundamentally Different Factors (FDF) variance under the provisions of section 301(n) of the CWA. The FDF variance considers those facility-specific factors that a permittee believes to be uniquely different from the factors considered by EPA in developing an effluent guideline to determine whether the effluent guidelines limitations should be inapplicable to the permittee's facility. An FDF variance is based only on information submitted to EPA during the rulemaking establishing the effluent limitations, or on information the applicant did not have a reasonable opportunity to submit during the rulemaking process. See CWA section 301(n)(1)(B). If fundamentally different factors are determined to exist, the alternative effluent limitations for the petitioner must be no less stringent than those justified by the fundamental difference. See CWA section 301(n)(1)(C). The alternative effluent

limitation must not result in non-water quality environmental impacts significantly greater than those accepted by EPA in promulgating the effluent limitations guidelines or pretreatment standards. See CWA section 301(n)(1)(D). FDF variance requests, along with all supporting information and data, must be received by the permitting authority within 180 days after publication of the final effluent limitations guideline or standard. See CWA section 301(n)(a). The specific regulations covering FDF variance requirements and administration are found at 40 CFR 122.21(m)(1), 40 CFR Part 125, Subpart D, and 40 CFR 403.13.

Dischargers may also apply for a variance from the BAT limitations on non-conventional pollutants in these final regulations under CWA section 301(c) (for economic reasons) and 301(g) (for water quality reasons). Regulations for the administration of these variances are specified in 40 CFR 122.21(m)(2).

New sources subject to NSPS or PSNS are not eligible for variances. See *E.I. DuPont* v. *Train,* 430 U.S. 112 (1977).

(2) Permit Modifications. It may be necessary to modify a permit at some point after it has been issued. In a permit modification, only the conditions subject to change are reconsidered. All other permit conditions remain in effect unchanged. A permit modification may be triggered in several ways, such as when the regulatory agency inspects the facility and finds a need for the modification, or when information submitted by the permittee suggests a need for a modification. Any interested person may request that a permit modification be made. There are two classifications of modifications: major and minor. From a procedural standpoint, they differ primarily with respect to the public notice requirements. Major modifications require public notice while minor modifications do not. See 40 CFR 122.63. Virtually all modifications that result in less stringent conditions are treated as a major modification, with provisions for public notice and comment. Conditions that would necessitate a major modification of a permit are described in 40 CFR 122.62. Minor modifications are generally non-substantive changes. The conditions for minor modification are described in 40 CFR 122.63.

VII. Environmental Impacts

This section of the preamble describes the environmental impacts of the air and water regulations being promulgated today, and the environmental impacts of the MACT II regulations being proposed today. These impacts are described in terms of reductions in air pollution emissions expected as a result of the final MACT I and proposed MACT II rules, as well as the reduction in water pollution (effluent) discharges expected as a result of today's effluent limitations guidelines and standards for Subparts B and E. (In this section, all references to MACT I include MACT III unless expressly noted.) The emissions and effluent reductions described in this section generate the quantified and monetized benefits described in Section VIII of this preamble. This section also discusses the non-water quality environmental impacts of the effluent limitations guidelines and standards promulgated today, including air emissions, energy requirements, solid waste generation, water use, and wood consumption. Sections II.B.2 and VII.A describe air and water pollution control technologies for each subcategory regulated today: Kraft, Soda, Sulfite, and Semi-chemical mills that are subject to MACT I and MACT III standards; and bleached papergrade kraft and soda and papergrade sulfite mills that are subject to effluent limitations guidelines and standards. EPA estimates that the application of these technologies by the 155 mills regulated by today's air rules, including 96 of those mills also regulated by today's water rules, will substantially reduce air emissions and water pollution discharges, as described in Section VII.B.

A. Summary of Sources and Level of Control

Table VII–1 shows a summary of sources and technology bases/level of control for the final BAT/PSES effluent limitations guidelines and standards, and the final MACT I standards. The summary of sources and level of control for MACT II are discussed in the preamble for the proposed MACT standards elsewhere in today's **Federal Register**.

TABLE VII–1.—FINAL CLUSTER RULES—SOURCES AND TECHNOLOGY BASES/LEVEL OF CONTROL

Toxic and nonconventional pollutant effluent control (BAT, PSES, and BMP technology bases) by subcategory					Hazardous air pollutant emission control (MACT I and III levels of control) by subcategory			
Bleached papergrade kraft and soda	Papergrade sulfite			Best Management Practices (BMP), (Subparts B and E)	Kraft	Soda and semi-chemical	Sulfite	Secondary and nonwood fiber, and mechanical wood fiber
	Calcium, magnesium, and sodium sulfite	Ammonium sulfite	Specialty grade					
	Selected BAT/PSES			Spent Pulping Liquor Spill Prevention and Control.	Control LVHC System Vents			See Bleach Plant Block Below
ECF: 100% Substitution of Chlorine with Chlorine Dioxide; effective brownstock washing; elimination of hypochlorite; oxygen-and peroxide-enhanced extraction; closed brown-stock screening; and other processes discussed at Section VI.B.5.a(1).	TCF: Oxygen- and peroxide-enhanced extraction; peroxide bleaching; elimination of all chlorine-containing compounds; and improved pulp cleaning.	ECF: 100% Substitution of Chlorine with Chlorine Dioxide; peroxide-enhanced extraction; elimination of hypochlorite; and use of dioxin-and furan-precursor-free defoamers.	ECF: 100% Substitution of Chlorine with Chlorine Dioxide; oxygen- and peroxide-enhanced extraction; elimination of hypochlorite; and use of dioxin and furan precursor-free defoamers.	.....	Control Selected HVLC Vents and Named High HAP Concentrated Condensate Streams.	Control Pulp Washing System Vents at New Sources.	Control Pulp Washing System Vents, and Control Liquor and Acid Tank Vents at New Sources.	
					Bleach Plant: Control Chlorinated HAP from Vents at Stages That Use Chlorinated Bleaching Chemicals, and Control Chloroform Emissions by Complying with BAT codified at 40 CFR 430.24(a) and (e) and 40 CFR 430.54(a) and (c) or by 100% substitution of chlorine with chlorine dioxide and elimination of hypochlorite.			

B. Air Emissions and Water Effluent Reductions

1. Air Emissions Reductions

The reductions described in this section are derived from estimated air emissions reductions at all 155 pulp and paper mills in the CAA kraft, soda, sulfite and semichemical subcategories that are subject to MACT I and MACT II standards. These mills include the 96 mills subject to the effluent limitations guidelines and standards promulgated today. All references in this section to MACT I air emissions refer to the expected effects of implementing both the air and water portion of the final Cluster Rules.

Implementation of the MACT portion of the Cluster Rules is expected to significantly decrease HAP emissions. Table VII–2 presents the environmental impacts of the Final Cluster Rules (BAT, PSES, BMPs, and MACT I) and the Final Cluster Rules in combination with the MACT II proposed standards.

The air emission impacts presented in Table VII–2 are calculated based on mill-specific processes and emission control information, emission factors, and control levels summarized in Table VII–1. A more detailed discussion of the calculation of the environmental impacts for the final MACT standards is presented in Chapter 20 of the Background Information Document described in Section XI of this preamble. A detailed discussion of the environmental impacts of the proposed MACT II is contained in the docket for the proposed MACT II standard. As shown in Table VII–2, these final Cluster Rules not only reduce HAP emissions from all CAA and CWA subcategories regulated, but they also result in decreases of volatile organic compounds and total reduced sulfur using industry data updated to 1996. Emissions of particulate and carbon monoxide are estimated to increase under the final rules, but are expected to decrease when combined with the proposed MACT II standards. Emissions of sulfur dioxides, and, to a lesser degree, nitrogen oxides are estimated to increase. Sulfur dioxide emissions are generated primarily from the combustion of sulfur-containing compounds, such as TRS, in the vent streams at kraft mills. The increases in carbon monoxide, nitrogen oxide, and particulate matter air emissions are primarily from the combustion of air vents in the pulping area and increased energy to produce additional steam for steam strippers and chlorine dioxide for the bleaching system. However, these emission increase estimates are likely overstated because they do not account for the fact that some mills in sensitive areas for sulfur dioxide already have sulfur dioxide controls in place or may choose alternative controls available in the final MACT rule that mitigate these

increases. The health effects and benefits of these emission reductions and increases are discussed in Section VIII.G.1 of this notice.

TABLE VII–2.—AIR EMISSION IMPACTS OF PULP AND PAPER RULES (ALL CAA SUBCATEGORIES)

Air pollutants	Baseline air emissions (Mg/year)	Air emission reductions (Mg/year)	
		Final cluster rules	Final cluster rules and proposed MACT II
Hazardous Air Pollutants	240,000	139,000	142,000
Volatile Organic Compounds	900,000	409,000	440,000
Total Reduced Sulfur	150,000	79,000	79,000
Particulate	[a]NA	[b](83)	24,000
Carbon Monoxide	NA	(8,700)	49,000
Nitrogen Oxides	NA	(5,200)	(5,700)
Sulfur Dioxides	NA	(94,500)	(94,400)

[a] Industry process data was not collected to calculate emissions for these pollutants increases and decreases for these pollutants reflected in columns to the right are increases or decreases of these pollutants caused by projected installation of MACT control equipment and secondary air emission impacts of BAT, PSES, and BMPs.
[b] Values in ( ) are estimated emission increases over baseline air emissions.

2. Water Pollutant Reductions

Table VII–3 shows the estimated baseline (as of mid-1995) and the reductions from baseline expected from the BMP requirements being promulgated today for the Bleached Papergrade Kraft and Soda and Papergrade Sulfite subcategories. (Hereafter, references to BAT/PSES impacts include impacts associated with today's BMP requirements.) Calculation of these pollutant reductions is discussed in Sections VI.B.5.a(3) and VI.B.6.b(5). For a discussion of the estimated effluent reduction benefits associated with the BAT limitations promulgated for the Voluntary Advanced Technology Incentives Program for the Bleached Papergrade Kraft and Soda subcategory, see Section IX. A.6 and Table IX–1.

TABLE VII–3.—ESTIMATED POLLUTANT REDUCTIONS FROM BASELINE FOR BAT/PSES

Pollutant parameter	Units	Baseline discharge for BPK mills	Estimated reductions: Final BAT/PSES for BPK mills	Baseline discharge for PS mills	Estimated reductions: Final BAT/PSES for PS mills
2,3,7,8-TCDD	g/yr	15	11	0.78	0.65
2,3,7,8-TCDF	g/yr	115	107	6.7	6.4
Chloroform	kkg/yr	48	40	5.4	5.2
Chlorinated Phenolics	kkg/yr	55	45	2.0	1.8
AOX	kkg/yr	36,300	24,200	4,380	4,010

BPK—Bleached Papergrade Kraft and Soda subcategory.
PS—Papergrade Sulfite subcategory.
g—grams.
kkg—metric ton (1,000 kilograms or 1 megagram (Mg)).

The air quality impacts shown in Table VII–2 and the water pollutant effluent reductions shown above are used in the following section to estimate reduced human health and environmental risk attributable to today's rules. These estimates also form the basis for estimating monetized benefits in the following section.

C. Non-Water Quality Environmental Impacts of Effluent Limitations Guidelines and Standards (BAT, PSES, and BMPs)

Sections 304(b)(2)(B) and 306(b)(1)(B) of the Clean Water Act require EPA to consider the non-water quality environmental impacts of effluent limitations guidelines and standards. To address these statutory requirements, EPA analyzed the air emissions, energy requirements, solid waste generation impacts, and other environmental impacts of the compulsory BAT, PSES, and BMPs being promulgated today for the Bleached Papergrade Kraft and Soda and Papergrade Sulfite subcategories. The results of this analysis are presented below. In performing the analysis, EPA assumed that each mill in the regulated subcategory would install the model technologies upon which today's limitations and standards are based.

1. Air Emissions

The air emissions reductions of BAT, PSES, BMPs, and MACT I, in combination, are presented in Section VII.B.1 above. This section presents the estimated air emission impacts of BAT, PSES, and BMPs on the 86 mills with production in the Bleached Papergrade Kraft and Soda subcategory and the 11 mills with production in the Papergrade Sulfite subcategory. (One mill has co-located operations in both subcategories that separately contribute to the number of mills in each subcategory.)

The control technologies that form the basis of effluent guidelines and standards promulgated today involve changes in the processes used to produce bleached pulp. These changes affect the rate at which air pollutants, including HAPs, are emitted from the pulping and bleaching processes that are subsequently controlled by MACT I. As shown in Table VII–4, the process changes at bleached papergrade kraft

and soda and papergrade sulfite facilities subject to BAT, PSES, and BMPs decrease the emissions of some HAPs but have little impact on others. For example, the elimination of chlorine and hypochlorite from bleaching processes, part of the basis for BAT and PSES, will reduce the emission of chloroform in the Bleached Papergrade Kraft and Soda subcategory by 66 percent [but will have a much smaller impact on the emission of methanol.] The application of the BAT, PSES, and BMPs promulgated today for the Bleached Papergrade Kraft and Soda subcategory will reduce the emission of total HAPs from the sources controlled by MACT I from 149,000 Mg/year to 139,000 Mg/yr (7 percent reduction) without taking into account further reductions achieved by MACT I controls.

TABLE VII–4.—IMPACT OF BAT, PSES, AND BMP: BLEACHED PAPERGRADE KRAFT AND SODA AND PAPERGRADE SULFITE MILLS AIR EMISSIONS FROM SOURCES SUBJECT TO CONTROL BY MACT I

Air pollutants	Bleached papergrade kraft and soda [Mg/year]		Papergrade sulfite (all segments) [Mg/year]	
	Baseline emissions	Emission reductions from BAT/PSES/BMPs	Baseline emissions	Emission reductions from BAT/PSES/BMPs
Total Hazardous Air Pollutants	149,000	10,000	5,190	1,930
Chloroform	9,510	6,060	13	8
Volatile Organic Compounds	569,000	11,000	6,020	2,270
Total Reduced Sulfur	100,000	1,300	0	0

The process changes that form the basis of BAT, PSES, and BMP's increase by approximately 1.5 percent the amount of spent pulping liquor combusted by bleached papergrade kraft mills and papergrade sulfite mills. See the Supplemental Technical Development Document, DCN 14487. HAPs and criteria air pollutants (volatile organic compounds, particulate matter, carbon monoxide, nitrogen oxides, and sulfur dioxides) are generated from combustion of spent pulping liquor by bleached papergrade kraft and sulfite mills. As a result, as shown in Tables VII–5a and VII–5b, the emission of total HAPs from spent pulping liquor combustion sources (i.e., recovery boilers) will increase by 1.1 percent at bleached papergrade kraft and soda facilities and 1.9 percent at papergrade sulfite facilities above the 1995 baseline. However, the net increase in HAP emissions from these combustion sources (235 Mg/yr) represents 1.1 percent of the HAP emissions from all sources subject to control by MACT I, II, and III. Although BAT, PSES, and BMPs result in a small increase in HAP emissions from recovery boilers, the combined effect of the Cluster Rules (including proposed MACT II) is a net decrease of 60 percent in total HAP emissions from all controlled sources. See Table VII–2.

TABLE VII–5A.—IMPACT OF BAT, PSES, AND BMP: BLEACHED PAPERGRADE KRAFT AND SODA AIR EMISSIONS FROM RECOVERY BOILERS AT BLEACHED PAPERGRADE KRAFT AND SODA MILLS SUBJECT TO PROPOSED MACT II [MG/YEAR]

	1995 baseline emission	Emission increases from BAT/PSES/BMPs	MACT II emission reductions	Net change after MACT II[a]
Hazardous Air Pollutants	19,900	220	25	195
Volatile Organic Compounds	19,500	213	0	213
Total Reduced Sulfur	2,650	27	0	27
Particulate Matter	31,400	360	12,900	(12,540)
Carbon Monoxide	124,000	1,440	0	1,440
Nitrogen Oxides	36,100	423	0	423
Sulfur Dioxides	67,800	784	0	784

[a] Parentheses indicate emissions decreases below baseline.

TABLE VII–5B.—IMPACT OF BAT, PSES, AND BMP: AIR EMISSIONS FROM RECOVERY BOILERS AT PAPERGRADE SULFITE MILLS SUBJECT TO PROPOSED MACT II [MG/YEAR]

	1995 baseline emission	Emission increases from BAT/PSES/BMPs	MACT II emission reductions	Net change after MACT II
Hazardous Air Pollutants	2,110	40	N/S	40

N/S—Not Significant.

Increases in the emission of criteria pollutants are also listed in Table VII–5a. The emission of total criteria air pollutants from spent pulping liquor combustion sources (i.e., recovery boilers) at mills in the Bleached Papergrade Kraft and Soda subcategory will increase by 1.2 percent as a result of BAT, PSES, and BMPs and will be only slightly mitigated by MACT II controls. The increases in nitrogen oxides (423 Mg/yr), sulfur dioxides (784 Mg/yr), and carbon monoxide (1440 Mg/yr) emissions are minor relative to nationwide emissions, which are 19.8 million Mg/yr for nitrogen oxides, 16.6 million Mg/yr for sulfur dioxides, and 83.6 million Mg/yr for carbon monoxide (OAQPS, 1995).

EPA concludes that the technologies that form the basis of BAT, PSES, and BMPs for bleached papergrade kraft and soda and papergrade sulfite mills pose no significant adverse impacts to and indeed have some benefits for air quality. EPA bases this determination on the following:

—Total HAP emissions from the sources subject to control by MACT I and proposed MACT II from kraft and sulfite pulping and bleaching processes decrease as a result of BAT, PSES, and BMPs;

—HAP emissions would increase by less than one percent from bleached kraft combustion sources and increase by less than two percent from papergrade sulfite combustion sources; and

—The increase in criteria air pollutants for the Bleached Papergrade Kraft and Soda and Papergrade Sulfite subcategories is minor relative to current national industrial emissions.

EPA examined the effect of BAT combined with BMPs on the generation of CO_2 by considering the overall mill carbon balance and the energy balance. Anthropogenic generation of water vapor is minuscule relative to atmospheric recycling and is normally ignored in greenhouse gas analysis. Therefore, water vapor is ignored here. EPA concluded that neither option would have an impact on the total emission of greenhouse gasses from mills due to pulping processing. There, EPA concludes that the increased CO_2 emissions attributable to BAT pose no significant adverse non-water quality environmental impact.

2. Energy Impacts

The impacts of BAT, PSES, and BMPs on the energy use of the 86 mills with production in the Bleached Papergrade Kraft and Soda subcategory and the 11 mills with production in the Papergrade Sulfite subcategory are summarized in Table VII–6. The process changes that form the basis of the regulations promulgated today are estimated to result in an increased energy requirement of 3.70 trillion Btu/yr in oil equivalent at the 96 affected pulp and paper mills. This represents a 0.82 percent increase from the current total Bleached Papergrade Kraft and Soda subcategories energy consumption (papergrade sulfite total energy consumption is minor relative to bleached papergrade kraft) of 499.4 trillion Btu/yr in oil equivalent (DCN 14510). The increased energy use is due to the increased off-site chemical manufacturing electrical demand (met by off-site electric generating stations) and on-site electrical demand (also met by off-site electric generating stations, and commonly referred to as ''purchased energy''). These increased demands are partially offset by the decreased steam demand (met by on-site power boilers and recovery furnaces). Oil equivalent is used to express the combined effects of changes in thermal energy and electric power. It is based on the assumption that marginal changes in electric power demand caused by the regulation will be supplied by conventional condensing-type oil-fired power stations. See DCN 14487.

TABLE VII–6.—ENERGY IMPACTS OF BAT, PSES, AND BMP: BLEACHED PAPERGRADE KRAFT AND SODA AND PAPERGRADE SULFITE MILLS

Energy impacts	Units	Bleached papergrade Kraft	Papergrade sulfite (all segments)	Combined total
On-Site Electricity Demand*	Trillion Btu/yr in oil equivalent	(2.37)	(0.0381)	(2.41)
Off-Site Electricity Demand*	Trillion Btu/yr in oil equivalent	10.0	(1.05)	8.95
Steam Demand	Trillion Btu/yr in oil equivalent	(2.88)	(0.010)	(2.89)
Total Energy Demand**	Trillion Btu/yr in oil equivalent	4.78	(1.08)	3.70
Total Energy Equivalent	Number of Households***	46,100	(10,400)	35,700

Parentheses indicate energy savings.
* Assumes an overall electrical generating efficiency of 25 percent. (DCN 14797).
* * Totals do not equal the sum of each line item due to rounding. Refer to Section 11 of the Supplemental Technical Development Document which presents detailed energy estimates.
* * * Assumes 103.6 million Btu/household/yr (Energy Information Administration (DOE) 1993).

The manufacture of sodium chlorate, the raw material used at pulp mills to manufacture chlorine dioxide, requires much more electrical energy than the manufacture of chlorine or other commonly used bleaching chemicals. As a result, off-site electrical demand increases by 8.95 trillion Btu/yr (2.61 million MWhr/yr) because of the effluent limitations guidelines and standards promulgated today. EPA estimates of changes in energy demand as mills install advanced technologies can be found in DCN 14488.

The total increase in energy demand resulting from this rule is equivalent to the energy required for 35,700 households. Compared to the most recent data for total national energy consumption, the rule represents a 0.004 percent increase in energy demand. EPA concludes that the technologies that form the basis of BAT, PSES, and BMPs for bleached papergrade kraft and soda and papergrade sulfite mills do not pose significant adverse impacts in nation-wide energy demand.

3. Incidental BOD_5 Removal and Sludge

The process changes that form the basis for BAT, PSES, and BMP increase by approximately 1.5 percent the amount of spent pulping liquor collected and combusted by bleached papergrade kraft and soda mills. Spent pulping liquor is a significant source of BOD_5 loadings at these mills. The collection and combustion of this spent pulping liquor results in an approximately 20 percent decrease in BOD_5 load into treatment. (EPA expects that papergrade sulfite mills will have similar trends, but lacks data to calculate residuals.)

Sludge is generated as a byproduct of the wastewater treatment systems used at pulp and paper mills. Primary sludge

(i.e., solids removed during physical wastewater treatment processes such as sedimentation prior to biological treatment) is high in wood fiber and volatile solids. Secondary sludge is the product of biological treatment in which microorganisms consume organic matter (BOD_5) in the wastewater. Secondary sludge is a gelatinous mixture of bacterial and fungal organisms. Because of the reduction in BOD_5 load into treatment, the combined application of BAT limitations, PSES, and BMPs promulgated today will decrease sludge generation by 35,900 kkg/yr (39,600 short tons/yr), which represents a 2 percent reduction from the mid-1995 baseline for subpart B and E mills.

Sludge generated at bleached papergrade kraft and soda and papergrade sulfite mills may contain dioxin and furan if these pollutants contaminate the wastewater treated at these mills. At proposal, the Agency estimated that the mills in these two subcategories generated 177 g/yr TEQ dioxin and furan in their wastewater treatment sludge. Since the proposal, industry has significantly reduced the level of dioxin and furan in its wastewater. The Agency estimates that the dioxin and furan content of the sludge has decreased similarly, to approximately 50 g/yr TEQ. See the Supplemental Technical Development Document, DCN 14487.

The process changes that form the basis of the BAT limitations and PSES promulgated today limit the concentration of dioxin and furan allowed to be discharged to the wastewater treatment system. As a result, the Agency estimates that when fully implemented, the combined application of BAT limitations and PSES will reduce the present sludge loading of dioxin and furan TEQ by 43 g/yr, approximately an 85 percent reduction from current levels. The period of time before individual mills have reached this level will vary somewhat depending on the compliance schedule incorporated in the permit and the type of treatment system in place at each mill. See the Supplemental Technical Development Document, DCN 14487.

EPA concludes that the technologies that form the basis of BAT, PSES, and BMPs for the Bleached Papergrade Kraft and Soda and Papergrade Sulfite subcategories are beneficial from the standpoint of solid waste generation. The technologies both reduce the quantity of solid waste generated and also improve its quality by reducing the pollutant loading in the sludge generated.

4. Other Environmental Impacts

Wood consumption at the bleached papergrade kraft and soda mills will be reduced by up to 0.3 percent by the final BAT limitations and PSES promulgated today. The wood savings results from a reduction in losses of useful fiber associated with the recovery of liquor spills and improvements in brownstock washing and screening of pulp. EPA estimates no change in wood consumption at mills in the Papergrade Sulfite subcategory.

The control technologies that form the basis of the effluent limitations guidelines and standards promulgated today will reduce bleached papergrade kraft and soda mill effluent wastewater flows. The greatest reductions would be realized in mills presently discharging the highest flows. In 1995, the average bleached kraft mill discharged approximately 95 m^3/metric ton effluent (23,000 gallons/metric ton). For a 1,000 metric ton/day mill, the average effluent flow is similar to that from a city of 250,000 people. The effluent limitations guidelines and standards will reduce total effluent flow in two ways: (1) Closure of brownstock screening systems, and (2) BMPs. At a mill with open screening, closure could reduce total effluent flow by 25 percent. BMP implementation could result in further effluent flow decreases of two percent. EPA estimates a small reduction in wastewater effluent flow from mills in the Papergrade Sulfite subcategory.

EPA concludes that the technologies that form the basis of BAT, PSES, and BMPs for the Bleached Papergrade Kraft and Soda and Papergrade Sulfite subcategories are beneficial from the standpoint of wood use and wastewater generation, and will not produce significant adverse non-water quality environmental impacts.

D. Non-Water Quality Environmental Impacts of New Source Performance Standards and Pretreatment Standards for New Source (NSPS and PSNS)

EPA analyzed the projected non-water quality environmental impacts of BAT for the Bleached Papergrade Kraft and Soda subcategory for BAT, PSES, and BMPs based on complete substitution of chlorine dioxide for chlorine and other technology elements. This section presents the non-water quality environmental impacts of a second technology configuration (NSPS and PSNS) which is equivalent to BAT, PSES, and BMPs with the addition of extended delignification (oxygen delignification or extended cooking) on a new 1000 tpd bleached papergrade kraft fiber line.

Table VII–7 presents the non-water quality environmental impacts of the selected technology basis for NSPS and PSNS, compared to conventional pulping and bleaching technology. These estimates are based on the same calculational methodology described under BAT and PSES, applied to a 1000 tpd model mill. Based on these estimates, EPA concludes that the process technologies that form the basis for NSPS and PSNS for the Bleached Papergrade Kraft and Soda subcategory pose no significant adverse non-water quality environmental impacts.

TABLE VII–7.—NON-WATER QUALITY ENVIRONMENTAL IMPACTS OF NSPS/PSNS FOR THE BLEACHED PAPERGRADE KRAFT AND SODA SUBCATEGORY

	1000 tpd fiber line
Wood Consumption	No Difference.
Effluent Flow	Moderate Decrease.[1]
BOD to Treatment	Decrease by 11,300 kg/day.
Sludge Generation	Decrease by 890 kg/day.
Carbon Dioxide	Decrease by 21,700 Mg/year.
Energy Impacts:	
Total Electricity Demand	Decrease by 222,600 million BTU/year in oil equivalent.
Total Steam Demand	Increase by 60,180 million BTU/year in oil equivalent.
Total Energy Demand	Decrease by 162,400 million BTU/year in oil equivalent.
Air Emissions:	
Hazardous Air Pollutants	Increase by 407 Mg/year.
Chloroform	No Difference.
Volatile Organic Compounds	Increase by 707 Mg/year.

TABLE VII–7.—NON-WATER QUALITY ENVIRONMENTAL IMPACTS OF NSPS/PSNS FOR THE BLEACHED PAPERGRADE KRAFT AND SODA SUBCATEGORY—Continued

	1000 tpd fiber line
Total Reduced Sulfur	Increase by 28 Mg/year.
Particulate Matter	Decrease by 12 kg/year.
Carbon Monoxide	Decrease by 3 Mg/year.
Nitrogen Oxides	Decrease by 28 Mg/year.
Sulfur Dioxides	Decrease by 56 Mg/year.

[1] See Section 11.4.1.3 of the Supplemental Technical Development Document, DCN 14487.

NSPS and PSNS that EPA is promulgating today for the Papergrade Sulfite subcategory are equivalent to BAT and PSES. Therefore, the NSPS and PSNS present no additional non-water quality environmental impacts.

VIII. Analysis of Costs, Economic Impacts, and Benefits

A. Summary of Costs and Economic Impacts

This section presents a summary of EPA's evaluation of the costs, economic impacts, and benefits of the Cluster Rules. A more detailed analysis is contained in the Economic Analysis for the National Emission Standards for Hazardous Air Pollutants for Source Category: Pulp and Paper Production; Effluent Limitations Guidelines, Pretreatment Standards, and New Source Performance Standards: Pulp, Paper, and Paperboard Category—Phase 1 (DCN 14649; hereafter, the Economic Analysis).

Today's action is a significant departure from prior EPA rulemakings in that, for one industry, EPA is considering the ramifications of implementing two major environmental statutes with respect to pollution control, industrial technology and operations, environmental impacts, costs, and economic impacts. As noted in Section II of this preamble, today's rulemaking establishes regulations that implement elements of both the CAA and CWA. The objective of this economic analysis is to provide the most accurate portrayal possible of the aggregate costs that the industry will face by implementing these regulations, as well as the economic, financial, and social impacts that EPA estimates will result from these costs. The economic impacts of the combined, or joint, costs of the final CWA (BAT, NSPS, PSES, PSNS, and BMP) requirements and the final and proposed CAA requirements (MACT I, MACT III, and proposed MACT II) are different than the impacts that would result from the costs of the CWA or CAA requirements considered separately. While EPA presents separately the CWA and CAA compliance costs and the economic impacts of those costs in this section, the Agency believes the most accurate estimation of the economic impacts that the pulp and paper industry will experience is derived by considering total (combined) compliance costs of both the CAA and CWA rules. Under the CWA, EPA considered the economic impacts of each option by subcategory, combining indirect and direct dischargers. EPA combined these groups because there are no differences between direct and indirect dischargers in each subcategory with respect to characteristics of wastewater generated or the model process technologies considered.

The compliance costs described in this section are EPA's best estimates of the actual costs facilities will incur to comply with the promulgated and proposed rules.

The total annualized and operation and maintenance (O&M) costs differ somewhat from the engineering cost estimates shown in Section VI. The annual O&M costs shown in this section include a general and administrative cost of four percent of capital costs, which makes these O&M costs significantly higher than the engineering O&M cost estimates shown in Section VI. The annualized costs shown in Section VIII are both pre-tax and post-tax. Pre-tax costs, because they capture total economic losses to society, are considered the social costs of the rule and are used for examining cost-effectiveness (Sections VIII.D.4 and VIII.F.1) and for comparing the costs and benefits of the rule (Section VIII.H). Post-tax costs, which represent the projected costs to a firm after tax shields for depreciation and other factors are accounted for, are used in the economic achievability determination under the Clean Water Act to evaluate facility closures, firm failures, and related impacts. Post-tax costs are used in Sections VIII.A, VIII.B, VIII.C, VIII.E, VIII.J, and most of Sections VIII.D and VIII.F.

EPA's financial and economic analyses reflect as accurately as possible the information that pulp and paper industry managers will consider in making financial decisions. The economic impacts described in this section (such as facility closures, job losses, and reduced shipments) result from the total costs that a facility will bear (including environmental compliance costs) compared to the facility's expected revenues. EPA also evaluated the aggregate costs for all facilities borne by each company to determine if each company will be in jeopardy of bankruptcy as a result of aggregate compliance costs.

In this section, EPA also describes the qualitative, quantitative, and monetized benefits of environmental improvements expected to result from compliance with these rules, and compares these benefits to the costs of the rules. EPA identified 158 mills at proposal with kraft, soda, sulfite or semi-chemical pulping processes. Of these, EPA now projects that 155 mills will bear costs under the final MACT I and 149 mills will bear costs under the proposed MACT II (six mills do not practice chemical recovery). These numbers could change over time as mills change processes or close operations.

EPA separately evaluated the compliance costs and economic impacts of: (1) MACT I for the 155 mills that pulp wood using kraft, soda, sulfite, or semi-chemical pulping processes; (2) combined final MACT I and proposed MACT II for those mills; and (3) proposed MACT II for combustion sources at the 149 mills. Although all of the regulatory options and alternatives under consideration for MACT II are evaluated in the EA, only the economic impacts related to the proposed regulatory alternative are presented here. EPA estimates that there will be no economic impacts associated with the MACT III regulations, which are promulgated for mills that practice mechanical, secondary fiber, or non-wood pulping or that produce paper or paperboard from purchased pulp, because EPA believes that compliance with MACT III requirements will neither impose costs nor result in additional emissions reductions. For this reason, Section VIII presents no

further analysis of the MACT III regulations.

EPA separately evaluated the impacts of the BAT, PSES, NSPS, PSNS, and BMP requirements for the 86 mills currently in the Bleached Papergrade Kraft and Soda subcategory and the 11 mills currently in three segments of the Papergrade Sulfite subcategory. (One mill is in both CWA subcategories.) Both direct and indirect discharging mills are subject to BMPs. Hereafter, EPA's reference to BAT/PSES costs includes the costs of complying with the final BMP requirements.

EPA also evaluated the costs and impacts for the combination of MACT I and BAT/PSES for the 96 bleached papergrade kraft and soda and papergrade sulfite mills that are affected by both rules. EPA also provides an estimate of the economic impacts when the proposed MACT II costs are combined with the MACT I and BAT/PSES costs for these 96 mills. Finally, the economic impacts and costs for all 155 kraft, soda, sulfite, and semi-chemical mills affected by air and/or water regulations are reported.

EPA also evaluated the impacts of NSPS or PSNS costs for new sources, both singly and in combination with MACT I and proposed MACT II costs.

EPA evaluated economic achievability based on the relative magnitude of compliance costs (in the form of total annualized costs) and the resulting potential facility closures, potential job losses, firm failures (potential bankruptcies), reduced value of shipments, balance of trade effects, and indirect effects (reduced regional and national output and employment which reflect the fact that impacts on the pulp and paper industry will resonate throughout the economy). Table VIII–1 presents a summary of annualized costs and projected mill closures for the various rules and rule combinations. The level of detail for reporting results in the preamble (and in the EA) is sometimes constrained in order to protect confidential business information. For that reason facility closures and job losses, for example, are not identified for certain combinations of rules. All of the results are contained in the confidential portion of the rulemaking record.

TABLE VIII–1.—SUMMARY: COSTS AND ECONOMIC IMPACTS OF CAA AND CWA RULES

Costs and impacts	Rules					
	MACT I (final) (all mills)	MACT II (proposed) (all mills)	BAT/PSES (final) (BPK&PS) [1]	MACT I and BAT/PSES (final) (BPK&PS)	MACT I, BAT/PSES and MACT II (BPK&PS)	MACT I, BAT/PSES and MACT II (all mills)
Pre-Tax Annualized Costs ($ MM) [2]	125	32	263	351	366	420
Post-Tax Annualized Costs($ MM)	82	23	172	229	240	277
Mill Closures	0	0	1	2	3	3
Firm Failures	0	0	0	0	0	0

[1] BPK: Bleached Papergrade Kraft and Soda subcategory PS: Papergrade Sulfite subcategory.
[2] Pre-Tax costs are not used in determining economic achievability.

MACT Costs: Total annualized MACT I costs for 155 facilities in all subcategories regulated today are $82 million (all annualized costs presented in Section VIII are post-tax costs in 1995 dollars, except where noted). These costs differ from the engineering MACT control cost estimates presented in Section VI, as noted above and in Section VIII.B.1.c. Total annualized proposed MACT II costs for all subcategories that EPA proposes to regulate are $23 million. No mill closures, job losses, or firm failures are projected when either MACT I or proposed MACT II costs are analyzed individually. When the costs for final MACT I and proposed MACT II are combined, the (post-tax) annualized costs are $105 million and result in one estimated mill closure and losses of up to 700 jobs. No firm failures are predicted as a result of the combined costs of MACT I and MACT II.

BAT/PSES Costs: EPA estimated economic impacts for three BAT/PSES options (Option A, Option B, and TCF) for all bleached papergrade kraft and soda mills. Section VI.B.5.a(1) of this preamble contains a description of each option. The naming conventions of Option A, Option B, and TCF, which EPA introduced in that section, are also used here. EPA selected Option A as the technology basis for BAT/PSES for the Bleached Papergrade Kraft and Soda subcategory (see Section VI.B.5.a(5)). For the 11 mills in three segments of the Papergrade Sulfite subcategory, the Agency estimated the economic impacts of one technology for each segment. EPA selected those technologies as the bases for BAT/PSES for this subcategory (see Sections VI.B.6.b and d). EPA presents a summary of the economic impacts of the selected BAT/PSES technology bases immediately below. A summary of the economic impacts for the rejected BAT/PSES options in the Bleached Papergrade Kraft and Soda subcategory is presented in Section VIII.F.

Total annualized costs for the selected BAT/PSES for the 96 mills in the Bleached Papergrade Kraft and Soda and Papergrade Sulfite subcategories are $172 million. One mill closure is predicted for the Bleached Papergrade Kraft and Soda subcategory as a result of compliance costs. Estimates of job losses are not presented in order to protect confidential business information. EPA estimates no closures for the Papergrade Sulfite subcategory as a result of compliance costs. EPA estimates that no firm failures will result from BAT/PSES in these subcategories. Based on current information, EPA projects that there may be some new sources, most likely new fiber lines at existing pulp and paper mills. EPA has identified the per plant NSPS/PSNS costs for the Bleached Papergrade Kraft and Soda and the Papergrade Sulfite subcategories. EPA did not have sufficient information to reliably project the likely number of new sources (see Section VIII.D). EPA also expects that many replacement fiber lines constructed at Subpart B mills will be enrolled in the Voluntary Advanced Technology Incentives Program and will therefore be existing sources rather than new sources. 40 CFR 430.01(j)(2). EPA also conducted a barrier to entry analysis for new sources, discussed below.

Combined Costs: The combined annualized costs for MACT I and BAT/PSES, affecting 96 bleached papergrade kraft and soda and papergrade sulfite mills, are $229 million. As a result of these costs, two mills in the Bleached Papergrade Kraft and Soda subcategory are projected to close with an associated loss of 900 jobs. See Table VIII–3. No

mills are projected to close in the Papergrade Sulfite subcategory as a result of compliance costs. No firm failures are predicted.

The combined annualized costs for the proposed and final rules (MACT I, BAT/PSES, and proposed MACT II) affecting the 96 bleached papergrade kraft and soda and papergrade sulfite mills are $240 million. With these combined costs, three mills are projected to close. The associated job losses increase with the additional projected closure, but the estimate is not reported here in order to protect confidential business information. No firm failures are expected to result from the combined costs of MACT I, BAT/PSES, and proposed MACT II for these mills.

The annualized costs for the proposed and final rules (MACT I, BAT/PSES, and MACT II) applicable to all 155 kraft, soda, sulfite, and semi-chemical mills are $277 million. With these combined costs for all rules and all 155 mills, the impacts are unchanged; i.e., three mills are projected to close, job losses exceed 900, and no firm failures are expected.

B. Overview of Economic Analysis

1. Revisions in Analysis From Proposal

a. Subcategories. Based on the subcategorization described in Sections II.C.1, VI.A and VI.B.1, EPA estimated impacts for four CAA subcategories—Kraft, Sulfite, Soda, and Semi-Chemical Process—and two CWA subcategories—Papergrade Sulfite and Bleached Papergrade Kraft and Soda. The economic analysis addresses 155 mills in the CAA subcategories and 96 mills in the CWA subcategories. The 96 CWA mills are a subset of the 155 CAA mills.

b. Options. (1) Air Emissions Standards. The selected technology bases for the MACT I & III standards are discussed fully in Section II.B.2 of this preamble. Regulatory options and alternatives for MACT II are discussed in Section IV.F of the preamble to the proposed MACT II standards, which appears elsewhere in today's **Federal Register**, and in the Economic Analysis (DCN 14649). EPA's economic analysis presents results for eight regulatory alternatives. The summary presented here pertains only to the final MACT I standard and proposed MACT II standard.

(2) Effluent Limitations Guidelines and Standards. For the BAT/PSES analyses for the Bleached Papergrade Kraft and Soda subcategory, EPA's economic analysis addresses three technology options. The summary presented in this section of the preamble focuses on Option A, the selected BAT/PSES option, but a brief discussion of the impacts for the rejected options appears below in Section VIII.F. For the Papergrade Sulfite subcategory, EPA's economic analysis (and the summary presented here) analyzes only the technologies selected as the bases for the BAT/PSES for each segment. This is because EPA identified no technically available options for the three papergrade sulfite segments other than those considered and selected.

NSPS/PSNS costs for new sources are presented in Section VIII.D.

c. Methodology. The methodologies used by EPA to evaluate economic impacts at the time of proposal are fully discussed in the Economic Impact and Regulatory Flexibility Analysis of the Proposed Effluent Limitations Guidelines and NESHAP for the Pulp, Paper, and Paperboard Industry (EPA–821–R–93–021, November, 1993). Revisions to these methodologies are discussed below and more fully in Chapters 3 and 4 of the Economic Analysis (DCN 14649).

As discussed or referenced in the July 15, 1996 Notice, EPA revised components of the economic methodology to account for recent changes that have occurred in the pulp and paper industry, including: (1) revision of the discount rate; (2) integration of market (price change) effects into the financial closure model; (3) incorporation of new industry cycle data into the forecasting methodology; (4) adjustment of the starting year for the analysis to 1996; (5) incorporation of updated mill ownership data in the firm failure model; and (6) a revised method for calculating annual costs. See 61 FR at 36843–44. Each of these methodology revisions is briefly discussed below.

At proposal, EPA used a facility-specific cost of capital (an average of nine percent real cost of capital) derived from responses to a 1989 industry survey) that reflected financing costs in 1989. Real (inflation-adjusted) financing costs declined considerably between 1989 and 1995. For the final rule, EPA primarily used an inflation-adjusted seven percent cost of capital or discount rate in the economic analysis because this rate better reflects real industry financing costs from 1995 to 1997, and the Agency does not have accurate information on current facility-specific financing costs. Additionally, the Office of Management and Budget recommends a seven percent discount rate to evaluate the social costs of federal regulations. In Chapter 6 of the Economic Analysis (DCN 14649), EPA presents a sensitivity analysis of results using alternative discount rates.

At proposal, EPA used both a financial model and a comprehensive market model to assess economic effects. Much of the information in the market model was derived from the 1989 survey. A number of substantial changes have occurred in pulp and paper markets since 1989 that the market model does not reflect. EPA decided not to update the market model (which estimated price increases), because an update would have required a new survey of every mill and all product lines, which would have been unnecessarily costly and burdensome to mill operators. EPA was also concerned that the amount of time required for conducting and analyzing a second survey would unnecessarily delay the final rule. This would further extend the industry's inability to plan and make capital investments with certainty regarding regulatory requirements. Instead, EPA modified the financial model to incorporate product supply and demand elasticities, which are estimates of changes in demand or supply in response to price changes. The summary of results presented in this preamble does not reflect the effects of price increases, because such changes did not materially affect EPA decisions. Chapter 6 of the Economic Analysis (DCN 14649) presents all of the results.

The last year of price information available at proposal was 1988. Between 1988 and 1995, the pulp and paper industry completed a full industry revenue cycle, with revenues peaking in 1988, falling through 1992, and reaching historic heights in 1995. For the final rule, this newer information was incorporated into the forecasting methods for the financial closure model, which assumes this seven-year cycle (a six-year cycle was used at proposal) of falling and rising prices will continue into the future. Additionally, the starting year for the analysis was adjusted to 1996 (from 1989, which was used at proposal).

To identify potential firm failures (i.e., bankruptcies) using the Altman's Z financial ratio analysis, EPA obtained updated financial information, including mill ownership data, for publicly held companies. Because updated information for privately held companies was not available from public sources, EPA did not evaluate possible failures among private firms. To include these companies would have required a new industry survey.

A facility-level financial analysis that was conducted at proposal was discontinued because EPA was also unable to update facility-level financial information without a new survey. The facility-level analysis is not a

component of the Altman's Z analysis, on which EPA has relied to identify firm failures for this final rule. While providing some useful information, the facility financial analysis was not used to identify firm-level bankruptcies at proposal and did not provide the basis at proposal for making determinations of economic achievability.

As noted in Section VIII.A., EPA considers general and administrative as well as variable annual costs in the cost annualization calculation. At proposal, general and administrative costs (GAC) had been calculated as 4 percent of capital costs plus 60 percent of variable annual costs. Subsequent analysis indicated that the engineering estimates for effluent control already included the 60 percent of variable annual costs. To remove this double-counting, GAC is now calculated as four percent of capital costs for effluent control (see DCN 14086). GAC is added after the engineering estimates prior to cost annualization; this explains the differences between engineering and economic estimates of operating and maintenance costs.

All of the previously discussed revisions were made in an effort to conduct an economic analysis of the air and water regulations that is more representative of current economic conditions in the pulp and paper industry and that provides more accurate economic impact results.

C. Costs and Economic Impacts for Air Emissions Standards

Table VIII–2 presents the engineering control cost estimates for MACT I and for the regulatory alternative proposed for MACT II: $755 million in total capital costs and $172 million in annualized costs. A more detailed discussion of the control costs for the final MACT standard, including emission reductions and cost-effectiveness, is provided in Chapter 20 of the Background Information Document. Table VIII–2 also presents the capital costs and pre-tax and post-tax annualized costs used in the economic analysis. EPA has determined that the MACT III standards will impose no costs; therefore, none is presented here or in Table VIII–2.

As noted in Section VIII.A. and Chapter 5 of the Economic Analysis, the engineering control cost estimates of the cost of MACT regulations differ from the costs used in EPA's economic impact analysis of those standards. The economic analysis also differentiates between pre-tax annualized costs and post-tax annualized costs as discussed in Section VIII.A.

TABLE VIII–2.—ESTIMATES OF THE COST OF AIR REGULATIONS

[Millions of dollars]

Regulation	MACT control cost estimates		Economic analysis MACT cost estimates		
	Capital costs	Annualized cost	Capital cost	Annualized costs	
				Pre-tax	Post-tax
MACT I	$496	$130	$501	$125	$82
MACT II	259	42	258	32	23
Total Air	755	172	759	157	105

Based on the economic analysis, EPA predicts no firm failures, mill closures, or associated job losses as a result of the costs of the MACT rules considered individually. When the costs of the MACT rules are combined, EPA projects one mill closure with up to 700 job losses. No firm failures are anticipated for the combined MACT rules.

D. Costs and Economic Impacts for Effluent Limitations Guidelines and Standards

1. BPT and BCT

As explained in Section VI.B.2, EPA is exercising its discretion not to revise BPT limitations for conventional pollutants at this time for Subparts B and E. In addition, candidate BCT technologies do not pass the two-part BCT cost reasonableness test. Therefore, EPA is not revising the current BCT limitations for Subparts B and E mills; as a result, these mills will incur no incremental BPT or BCT costs.

2. Bleached Papergrade Kraft and Soda Subcategory

a. BAT/PSES. For the selected BAT/PSES (Option A), capital costs are $966 million, O&M costs are $151 million, and annualized costs are $162 million. When considering these costs alone, the economic analysis predicts closure of one mill as a result of this rule and no firm failures. Other economic impacts (e.g., job losses) are reported in the CBI portion of the rulemaking record.

b. NSPS and PSNS. EPA considered the cost of NSPS and PSNS technology for new source mills in the Bleached Papergrade Kraft and Soda subcategory. EPA expects few new source mills or fiber lines to be constructed that will be subject to NSPS/PSNS. Even if new source mills or fiber lines are constructed that are subject to NSPS/PSNS, EPA estimates that the selected NSPS/PSNS would not present a barrier to entry. EPA estimated the average incremental capital costs of NSPS/PSNS compliance (compared to Option A technology) to be approximately 0.50 to 2.0 percent of the capital cost of constructing a new source mill or fiber line and concluded that this cost was not sufficient to present a barrier to entry for proposed entrants, particularly considering the lower operating costs of Option B.

3. Papergrade Sulfite Subcategory

a. BAT/PSES. As explained in Section VI.B.6.a, EPA is dividing the Papergrade Sulfite subcategory into three segments. For BAT/PSES for all three segments combined, capital costs are $73.8 million, O&M costs are $7 million, and annualized costs are $9.8 million. No mills are projected to close as a result of these compliance costs, and no firms are projected to fail. There is no expected loss of jobs, shipments, or exports.

b. NSPS/PSNS. EPA considered the costs of NSPS/PSNS for new source mills in the Papergrade Sulfite subcategory. Because NSPS/PSNS equals BAT/PSES, EPA concluded that such costs were not sufficient to present a barrier to entry. First, the cost of the NSPS/PSNS technology is an insignificant fraction of the capital cost of a new source mill or fiber line (less than one percent). Also, the costs of including the selected NSPS/PSNS technology at a new source mill are substantially less on a per ton basis than the costs of retrofitting existing mills. Moreover, the increased chemical recovery and reduced operating costs for the NSPS/PSNS option allow firms to

recover the capital cost associated with the NSPS/PSNS technology.

4. Cost-Effectiveness

EPA uses a cost-effectiveness ratio of dollars per toxic pound equivalent removed (see Economic Analysis (DCN 14649), Chapter 5) to evaluate the relative efficiency of a technology option in removing toxic pollutants. The results reported below are expressed in 1981 dollars, as prescribed by EPA's cost-effectiveness methodology (DCN 14649). For the Bleached Papergrade Kraft and Soda subcategory, the cost-effectiveness ratio for both BAT and PSES is $14 per toxic pound equivalent removed. The cost-effectiveness ratios for the Papergrade Sulfite subcategory are $13 per toxic pound equivalent removed for BAT and $45 per toxic pound equivalent for PSES. EPA considers the selected technology bases for the BAT/PSES limits for both subcategories to be cost-effective.

E. Costs and Impacts for the Integrated Rules

EPA estimates that 155 kraft, soda, sulfite, and semi-chemical mills will incur costs to comply with the CAA rules; 96 bleached papergrade kraft and soda and papergrade sulfite mills will incur costs to comply with the CWA rule, and the same 96 mills will incur both CAA and CWA rule costs. Table VIII–3 is a summary of the expected costs and impacts for various combinations of CAA and CWA rules. The losses of jobs, shipments, exports, and indirect effects reported in Table VIII–3 are the impacts derived from mill closures. Some results are not disclosed where confidentiality might be compromised.

TABLE VIII–3.—COSTS AND ECONOMIC IMPACTS OF CAA AND CWA RULES

Costs and Impacts	Rules					
	MACT I (final)	MACT II (proposed)	BAT/PSES (BPK&PS)[1]	MACT I & BAT/PSES (96 mills)	MACT I, BAT/PSES & MACT II (BPK&PS) (96 mills)	MACT I, BAT/PSES & MACT II (155 mills)
Capital Costs ($MM)	501	258	1,039	1,394	1,524	1,799
Post-Tax Annualized Costs ($MM)	82	23	172	229	240	277
Mill Closures	0	0	1	2	3	3
Firm Failures	0	0	0	0	0	0
Job Losses (from mill closures)	0	0	400	900	1,700	1,700
Decreased Shipments ($MM)	0	0	150	273	479	479
Decreased Exports ($MM)	0	0	19	19	22	22
Direct and Indirect Effects ($MM)	.....	.....	430	795	1,393	1,393

[1] BPK: Bleached Papergrade Kraft and Soda subcategory.
PS: Papergrade Sulfite subcategory.

While no mills are predicted to close due to MACT I costs alone, and one mill in the Bleached Papergrade Kraft and Soda subcategory is predicted to close due to BAT/PSES costs alone, EPA estimates that two mills in the Bleached Papergrade Kraft and Soda subcategory may close as a result of the combined costs imposed by these rules. The two predicted closures represent approximately 2.3 percent of the 86 bleached papergrade kraft and soda mills and 1.3 percent of all 155 kraft, sulfite, soda, and semi-chemical mills affected by this rulemaking. As a result of these two closures, 900 jobs could be lost. These jobs represent 0.9 percent of the jobs in the Bleached Papergrade Kraft and Soda subcategory. These costs generate a maximum estimated price increase of 1.5 percent for any product (pulp, paper or paperboard). Estimated losses in the value of shipments are approximately $273 million, or 0.8 percent of bleached papergrade kraft and soda shipments, while losses in the value of bleached papergrade kraft and soda exports are approximately $19 million, or 0.5 percent of subcategory exports.

No mills are projected to close in the CWA Papergrade Sulfite subcategory, or the CAA soda, sulfite, or semi-chemical subcategories as a result of either the promulgated CAA or CWA regulations or a combination of both.

EPA examined the indirect effects of the final regulations (MACT I, MACT III and BAT/PSES) on employment and output using a national-level input-output model developed by the U.S. Department of Commerce. The model provides multipliers that enable EPA to estimate national-level impacts based on the loss of employment and output from closing mills. Total projected effects on the U.S. economy of the combined MACT I and BAT/PSES are approximately 5,700 jobs lost and $795 million in lost economic output. While some local communities could experience some economic dislocation as a result of closures, overall national impacts would be insignificant. For comparison, the 1995 U.S. gross domestic product was $7.3 trillion. The loss is approximately one-tenth of 1 percent of the gross domestic product for 1995. EPA also evaluated regional (county-level) economic impacts when determining the economic achievability of the regulation. For the final MACT I and BAT/PSES, in the two counties where mills are projected to close, the unemployment rate would increase by 0.4 percent and 0.7 percent respectively.

In response to public comments, EPA also estimated the economic impacts associated with the combined costs of promulgated and proposed rules. When the MACT I, BAT/PSES, and MACT II costs are considered jointly, EPA projects an additional mill closure with 800 additional jobs lost and further decreases of $206 million in shipments and $3 million in exports. The total projected effects of the combined MACT 1, BAT/PSES, and MACT II costs are approximately 10,000 jobs lost and $1.4 billion in lost economic output.

F. Costs and Impacts of Rejected BAT/PSES Options for the Bleached Papergrade Kraft and Soda Subcategory

1. Summary of Results

Table VIII–4 presents costs and impacts for two options (Option B and TCF) that EPA evaluated, but did not select, as the basis for BAT/PSES for the Bleached Papergrade Kraft and Soda subcategory. EPA's rationale for selecting Option A for BAT/PSES for this subcategory is presented in Section VI.B.5.a(5). Table VIII–4 presents results in three ways: considering CWA costs and impacts alone; considering the costs and impacts of the rejected BAT/PSES options and MACT I; and considering

the costs and impacts of the rejected BAT/PSES options, MACT I, and MACT II.

TABLE VIII–4.—COSTS AND ECONOMIC IMPACTS OF REJECTED BAT/PSES OPTIONS FOR THE BLEACHED PAPERGRADE KRAFT AND SODA SUBCATEGORY

Costs & Impacts	Rules					
	Option B (BAT/PSES)	TCF (BAT/PSES)	Option B (BAT/PSES)+ MACT I	TCF + (BAT/PSES) MACT I	Option B (BAT/PSES) MACT I & MACT II	TCF, (BAT/PSES) MACT I & MACT II
Capital Costs ($MM)	2,100	3,100	2,600	3,600	2,700	3,700
Post-Tax Annualized Costs ($MM)	216	688	292	764	300	772
Mill Closures	2	7	4	9	ND[1]	9
Firm Failures	([3])	([3])	([3])	([3])	([3])	([3])
Job Losses (from mill closures)	900	7,100	4,800	10,200	ND	10,200
Decreased Shipments ($MM)	273	2,300	1,300	3,200	ND	3,200
Decreased Exports ($MM)	19	308	24	310	ND	310
Direct and Indirect Effects ($MM)	795	NR	3,850	NR	ND	NR

[1] ND: not disclosed to protect confidential business information.
[2] NR: not reported.
[3] 1 or more.

Option B: The BAT/PSES capital costs for Option B for the Bleached Papergrade Kraft and Soda subcategory are estimated at $2.1 billion; O&M costs are $87 million; and annualized costs are $216 million. These costs result in two projected mill closures, with direct impacts of at least 900 jobs lost, $273 million in decreased shipments, $19 million in decreased exports, and one or more potential firm failures. The firm failures may also result in thousands of additional jobs lost (see Section VI.B.5.a(5) and Chapter 6 of the Economic Analysis, DCN 14649). Indirect and direct economic loss (i.e., losses throughout the economy as a result of the closed mills) would be approximately $795 million. The mill closures are projected to increase county unemployment rates for the affected counties by 0.4 percent and 0.7 percent, respectively.

EPA also calculated cost-effectiveness ratios for Option B for this subcategory (for Option A results, see Section VIII.D.4, above). For direct dischargers, the average and incremental (compared to Option A) cost-effectiveness ratios are $15 per toxic pound-equivalent and $36 per toxic pound-equivalent, respectively (1981 dollars). For indirect dischargers, the incremental cost-effectiveness (compared to Option A), is $115 per toxic pound-equivalent.

Option B and MACT I: The combined capital costs for Option B and MACT I for mills in this subcategory are estimated at $2.6 billion; O&M costs are $154 million; and annualized costs are $292 million. MACT I annualized costs are greater under Option B than under Option A due to the additions of MACT controls for oxygen delignification equipment installed to comply with Option B. With the combined costs of Option B and MACT I, the number of projected mill closures increases to four, and the estimated number of firm failures remains unchanged at one or more. The four closures cause losses of approximately 4,800 jobs, $1.3 billion in shipments, and $24 million of exports. Direct and indirect losses would total nearly $4 billion. The mill closures are also projected to increase county unemployment rates; the range of increased unemployment for the affected counties is from less than 0.5 percentage points to nearly 10 percentage points (as a hypothetical example, from a baseline county unemployment rate of 10 percent to 10.5 percent after a closure in County X and from a baseline of 10 percent to 20 percent after a closure in County Y).

Option B, MACT I, and MACT II: The combined capital costs for Option B, MACT I, and proposed MACT II for mills in this subcategory are estimated at $2.7 billion; O&M costs are $153 million; and annualized costs are $300 million. With the combined costs of Option B, MACT I, and MACT II, the number of projected mill closures increases (number not disclosed), and the estimated number of firm failures remains unchanged at one or more. The analysis projects additional losses to jobs, shipments, and exports from the additional mill closures (amounts not disclosed). Direct and indirect losses would also increase, as would the unemployment rates in the counties in which the mill closures are located.

TCF: The capital costs for retrofitting mills in this subcategory for TCF technology are estimated at $3.1 billion for TCF based on peroxide bleaching and $5.6 billion for TCF based on ozone and peroxide bleaching, respectively. EPA evaluated mill closures for the TCF option with the lower capital costs. O&M costs for this option are $783 million, and annualized costs are $688 million. (TCF annualized costs appear lower than annual O&M costs because of tax shields.) EPA estimates that these costs would result in seven mill closures, which are associated with approximately 7,100 job losses. EPA did not conduct a firm failure analysis or calculate combined direct and indirect impacts for this option because the closures and job losses alone are more than sufficient indication that the option is not economically achievable. EPA estimates, however, that a greater number of firms would be placed in financial jeopardy with the costs of this option, compared to Option B, which EPA has already determined is not economically achievable (See Section VI.B.5.a(5)).

TCF and MACT I: The combined capital costs for TCF and MACT I for mills in this subcategory are estimated at $3.6 billion; O&M costs are $851 million, and annualized costs are $764 million. EPA estimates that these costs would result in nine mill closures and an associated loss of 10,200 jobs, $3.2 billion in shipments, and $310 million in exports. EPA conducted no additional economic analysis for this combination of costs.

TCF, MACT I, and MACT II: The combined capital costs for TCF, MACT I, and MACT II for mills in this subcategory are estimated at $3.7 billion; O&M costs are $849 million; and annualized costs are $772 million. With the combined costs of TCF, MACT I, and MACT II, EPA estimates that the number of mill closures, job losses, and

other impacts remain unchanged. EPA conducted no additional economic analysis for this combination of costs.

2. Implications of Results

The costs of either Option B or TCF are projected to cause one or more firm failures (bankruptcies). This is true even when the BAT/PSES costs are considered without the compliance costs associated with MACT I and/or MACT II. Although EPA cannot determine the actual outcome of the projected failures in terms of lost production, closed facilities, and lost jobs, the level of displacement would almost certainly cause detrimental impacts to the U.S. pulp and paper industry. Section VI.B.5.a(5) discusses EPA's reaction to these projected impacts in terms of regulatory decisions. See also Chapter 6 of the Economic Analysis, DCN 14649. That discussion also includes the Agency's findings that the rejected BAT/PSES options are not economically achievable.

G. Benefits

In addition to costs and impacts, EPA also estimated the environmental and human health benefits of implementing the CAA and CWA requirements. Section VII of this preamble describes the estimated reductions in air emissions and effluent discharges. The incremental environmental improvements noted in Section VII.B. are derived compared to a baseline of current emissions and discharges. Because current emissions and discharges are a function of current technology, this is the same baseline that was used to establish the costs of complying with the rules. To the extent the total benefits of the rule can be measured, costs can be directly compared to benefits.

EPA is confident that its estimation of compliance costs is a full and accurate account of such costs; EPA is less confident that the estimation of benefits is similarly complete. EPA is not currently able to quantitatively evaluate all human and ecosystem benefits associated with air and water quality improvements. EPA is even more limited in its ability to assign monetary values to these benefits and therefore to be able to compare them to costs in a standard cost-benefit framework. A comparison of costs to only the limited monetized subset of benefits severely underestimates the true benefits of environmental quality improvement and compromises the validity of a cost-benefit analysis. The economic benefit values described below and in the Economic Analysis (DCN 14649) should be considered a limited subset of the total benefits of these rules, and should be evaluated along with descriptive assessments of benefits and the acknowledgment that even these may fall short of the real-world benefits that will result from the rule.

1. Air Quality Benefits

Section VII.B.1 of this preamble describes the emissions reductions expected as a result of implementing MACT I and MACT II standards. Implementation of the final MACT I standard is expected to reduce emissions of HAPs, VOCs, and TRS, but increase emissions of PM, SO_2, CO, and NO_X. The proposed alternative for MACT II is expected to reduce emissions for HAPs, VOCs, PM, TRS, CO, and SO_2, while it is expected to create a slight increase in NOx emissions. The technology bases for BAT/PSES have secondary impacts on the level of air emissions. The combined effect of MACT I and MACT II for all subcategories regulated under the CAA is to decrease emissions for all of the above mentioned pollutants except NO_X and SO_2. See Table VIII–5 below. EPA performed an evaluation of the benefits associated with the air regulations based on the emission reductions estimated in Section VII.B.1. The net change in air benefits expected to result from the changes in emissions will be a change in adverse health effects associated with inhalation of the above pollutants as well as changes in welfare effects such as improved visibility and crop yields, and reduced materials soiling and corrosion. Chapter 4 of the EA presents a detailed description of the methodology used to monetize the benefits.

a. Qualitative Description of Pollutant Effects. The air rules are designed to reduce the emission of HAPs as defined in Section 112 of the CAA. Several of these HAPs are classified as probable or possible human carcinogens. Reducing the emissions of these pollutants is expected to reduce the cancer risk of the exposed population. Other HAPs are not classified as carcinogens; however, they have been shown to cause other adverse health effects such as damage to the eye, central nervous system, liver, kidney, and respiratory system when the concentration of these emissions is above the health reference benchmark for human exposure.

Total reduced sulfur (TRS) emissions cause the malodorous smell often associated with areas near pulp and paper mills. The MACT standards will reduce these effects significantly. Odorant stimulants of the nasal receptors that are associated with TRS emissions have been associated with marked respiratory and cardiovascular responses, however, the association is not direct because the perception of the odor does not necessarily cause toxic effects. The threshold for odor detections may occur before the onset of toxic effects. However, the absence of odor does not guarantee safety since some components of TRS emissions can cause fatigue of the olfactory senses, so individuals may not perceive an odor on some occasions when toxic effects can occur. There are numerous anecdotal reports of adverse reactions related to odors associated with TRS, including headaches, shortness of breath, nasal irritation, and, in some cases, nausea and sinus congestion.

VOC and NO_X emissions interact in the presence of sunlight to create ground-level ozone. Recent scientific evidence shows an association between elevated ozone concentrations and increases in hospital admissions for a variety of respiratory illnesses and indicates that ground-level ozone not only affects people with impaired respiratory systems (such as asthmatics), but healthy adults and children as well. Adverse welfare effects of ozone exposure include damage to crops, tree seedlings, ornamentals (shrubs, grass, etc.), and forested ecosystems. The reactions between VOCs and NO_X to form ozone depend on the balance in concentrations of each pollutant found in the ambient air. For example, when the concentration of NO_X is high relative to the concentration of VOCs, VOC reductions are effective in limiting ozone formation, while NO_X reductions in that situation are ineffective. The integrated rule is expected to increase NO_X emissions, but decrease VOC emissions. The increase in NO_X is not expected to cause significant adverse health or environmental impacts because the magnitude of this increase is much less than the magnitude of the VOC emission reduction. The VOC reductions are expected to contribute to the decrease in ozone concentrations.

The adverse human health effects associated with PM include: premature mortality; aggravation of respiratory and cardiovascular disease (as indicated by increased hospital admissions and emergency room visits, school absences, work loss days, and restricted activity days); changes in lung function and increased respiratory symptoms; alterations in lung tissue and structure; and altered respiratory tract defense mechanisms. Populations at greater risk from exposure are: individuals with respiratory disease and cardiovascular disease, individuals with infectious disease, elderly individuals, asthmatic individuals, and children. Reduced

welfare is associated with elevated concentrations of fine particles which reduce visibility, damage materials, and cause soiling. The integrated rule will decrease the adverse effects of PM.

CO is a colorless, odorless gas that is toxic to mammals. When inhaled, it combines with hemoglobin, which reduces the oxygen-carrying capacity of blood and results in less oxygen being transported to vital organs of the body. This can have detrimental effects on the cardiovascular, central nervous, and pulmonary systems. The reduction of CO emissions will diminish these potential effects.

SO_2 oxidizes in water to form both sulfurous and sulfuric acids. When SO_2 dissolves in the water of the respiratory tract of humans, the resulting acidity is irritating to the pulmonary tissues, causing nasal irritation and breathing difficulties (especially to individuals with respiratory diseases such as asthma). When SO_2 dissolves in the atmosphere in rain, fog, or snow, the acidity of the deposition can corrode various materials and cause damage to both aquatic and terrestrial ecosystems. SO_2 can also transform into $PM_{2.5}$, the effects of which are discussed above.

b. Monetized Air Quality Benefits. Table VIII–5 below presents both the health and welfare benefits described in this section as well as the emission reductions identified in Section VII.B.1 that are not monetized but are considered in the evaluation of benefits.

The benefit transfer method is utilized to value a subset of the pollutants discussed above (VOC, SO_2, and PM). This method relies on previous benefit studies that have been conducted for the same pollutants that are impacted by the pulp and paper rulemaking. These studies provide useful data that can be transferred across contexts in order to approximate the benefits of the pulp and paper emission reductions.

TABLE VIII–5.—EMISSIONS REDUCTIONS AND ANNUAL AIR QUALITY BENEFITS

Pollutant	Standard					
	MACT I		MACT II		Combined	
	Decrease (Mg)	Value ($MM)	Decrease (Mg)	Value ($MM)	Decrease (Mg)	Value ($MM)
HAPs	139,000	NE	2,600	NE	142,000	NE
TRS	79,000	NE	—	NE	79,000	NE
NO_X	(5,200)	NE	(500)	NE	(5,700)	NE
VOC	409,000	24–1,055	32,600	2–84	441,000	26–1,139
PM	(83)	(1)	24,000	300	24,000	299
CO	(8,700)	NE	58,000	NE	49,000	NE
SO_2	(94,500)	(1,064)–0	30	0.1–0.3	(94,400)	(1,064)–0.3
Total	.....	(1,040)–1,054	.....	302–384	.....	(739)–1,438

NE = not estimated.
Numbers in parentheses ( ) indicate emissions increases or negative benefits values.
Numbers in table rounded.

For VOCs, benefits are valued using estimates of a range of the average benefit per Megagram (Mg) derived from a recent benefit analysis conducted by EPA in the process of revising the ozone national ambient air quality standard (NAAQS) (see docket no. A–95–58: Regulatory Impact Analysis for the Particulate Matter and Ozone NAAQS and proposed Regional Haze Rule; July 1997). EPA values a range of VOC benefits reflecting (1) an assumption that the transfer of benefits must correlate with the areas that violate the ozone standard, and (2) an assumption that recognizes that reductions outside areas of violation of the ozone standard can have a positive benefit. Therefore, the range of values reflects the application of a range of values for the average benefit per Mg as they are applied to (1) the subset of VOC emission reductions in areas of violation, and (2) to all VOC emission reductions expected to be achieved by the integrated rule. The true value is likely to fall within this range. Using the range of values of the average benefit per Mg for ozone, monetized annual VOC benefits of MACT I emission reductions range from $24 million to $1,055 million. The lower-end of this range reflects an assumption of zero mortality effects associated with ozone exposure and assumes morbidity benefits occur only in areas predicted to violate the ozone standard, while the upper-end includes mortality estimates as are calculated for the upper-end of the range of ozone benefits is included in the NAAQS RIA and assumes morbidity benefits occur in all areas. For the proposed MACT II alternative, total annual VOC benefits range in value from approximately $2 million to $84 million. Therefore, total monetized VOC benefits of the integrated rule are approximately $26 million to $1,139 million.

For PM, a benefit transfer estimate is obtained from a benefit analysis of PM_{10} that was prepared to support the evaluation of the revised PM NAAQS (see Appendix C of the Regulatory Impact Analysis for the Particulate Matter and Ozone NAAQS and proposed Regional Haze Rule; July 1997). The average benefit per Mg derived from this study is applied to all changes in emissions of PM that result from the integrated rule. Using this value, the *loss* in total monetized annual PM benefits associated with MACT I is approximately $1 million. The proposed MACT II alternative achieves a *positive* benefit approximately equal to $300 million. Thus the combined value of PM benefits for the final and proposed pulp and paper air standards is $299 million.

For SO_2, the EPA transfers a benefit estimate from a national SO_2 strategy analysis conducted for the evaluation of the revised PM NAAQS (see docket no. A–95–54: Regulatory Impact Analysis for the Particulate Matter and Ozone NAAQS and proposed Regional Haze Rule; July 1997). This analysis shows that benefit values are higher in the eastern regions of the country when compared to the western regions. Therefore, EPA derives a range of benefit per Mg values for each segment of the country. In addition, EPA takes into consideration the uncertainty inherent in the estimate of MACT I SO_2 emission increases that may result from the rulemaking. Therefore for MACT I, EPA values all SO_2 emission increases to obtain a lower bound estimate of (negative) benefits and assumes zero emission increases due to the likely effects of mitigating behavior to obtain an upper bound estimate of zero

disbenefits. For MACT II, all emission reductions are valued. Using the range of values for the average benefit per Mg for SO_2 and the assumptions for the changes in emissions, monetized annual SO_2 disbenefits of MACT I range from $1,064 million down to $0. For the proposed MACT II alternative, total annual SO_2 benefits are from approximately $0.1 to $0.3 million. Therefore, total monetized SO_2 benefits (disbenefits) of the integrated rule are approximately ($1,064) million to $0.3 million.

Summing the monetized benefits and disbenefits for VOC, PM, and SO_2 emission changes provides a range of total annual benefits (disbenefits) for MACT I of approximately ($1,040) million to $1,054 million. Aggregate annual benefits attributed to MACT II range in value from $302 million to $384 million. Combining the benefits of the final and proposed air standards yields a range of total annual benefits from approximately ($739) million to $1,438 million.

These benefits are incomplete due to EPA's inability to quantify many benefit and disbenefit categories including individual health and welfare endpoints as well as the benefits and disbenefits of controlling entire pollutant categories. Pollutant categories that are not monetized are HAPs, TRS, CO, and NO_X.

c. Uncertainties Associated With Air Quality Benefits. Benefit per Mg estimates used to monetize PM and VOC emission reductions are uncertain because average benefit per Mg values do not take into account location-specific information such as the population exposed. The location-specific information is expected to have a significant effect on the estimated benefits associated with these emission reductions. Also, lack of information for several benefit categories precludes a complete quantification of all benefit categories (or disbenefits for pollutant increases).

2. Water Quality Benefits

This section describes environmental and human health benefits expected as a result of implementing new BAT/PSES limits at 92 of the 96 mills in the Bleached Papergrade Kraft and Soda and Papergrade Sulfite subcategories. (EPA estimated benefits for 92 mills because it did not have effluent discharge information from 3 mills and did not have receiving stream flow data for 1 mill). Because EPA was not able to project the number of new sources, EPA attributes no benefits to the final NSPS or PSNS regulations. Discharge of toxic, nonconventional, and conventional pollutants into freshwater, estuarine, and marine ecosystems may alter aquatic habitats, affect aquatic life, and adversely impact human health. See Section VII.B.2. Chlorinated organic compounds from chlorine bleaching, particularly 2,3,7,8-tetrachlorodibenzo-p-dioxin (TCDD) and 2,3,7,8-tetrachlorodibenzofuran (TCDF) are human carcinogens and human systemic toxicants and are toxic to aquatic life. These pollutants are persistent, resistant to biodegradation, and bioaccumulative in aquatic organisms. As of December 1995, states have issued 19 dioxin/furan-related fish consumption advisories near 18 papergrade sulfite and bleached papergrade kraft and soda mills (EPA, *National Listing of Fish Consumption Advisories,* June 1996).

EPA's analysis of these environmental and human health risk concerns and the water-related benefits resulting from the final effluent limitations guidelines and standards for these two subcategories is contained in the ''Water Quality Assessment of Final Effluent Limitations Guidelines for the Papergrade Sulfite and Bleached Papergrade Kraft and Soda Subcategories of the Pulp, Paper, and Paperboard Industry'' (WQA) (DCN 14650).

a. Qualitative Description of Water-Related Benefits. The final BAT limitations and PSES promulgated today for Subparts B and E will benefit aquatic life by reducing the pulp and paper industry's discharge of toxic and nonconventional pollutants, including a 91 percent reduction in TCDD and TCDF, a 69 percent reduction in AOX, an 83 percent reduction in chloroform, and an 82 percent reduction in chlorinated phenolic pollutants compared to mid-1995 discharge levels. Toxic and nonconventional pollutants will be reduced to levels below those considered to impact biota in many receiving waters. Pollution reduction numbers are provided in Section VII.B.2. Such impacts include acute and chronic toxicity, sublethal effects on metabolic and reproductive functions, and loss of prey organisms. Chemical contamination of aquatic biota may also directly and indirectly impact local pescivorous wildlife and birds.

b. Quantitative Estimates of Water-Related Benefits. EPA has quantified human health and aquatic life benefits using a site-specific analysis for baseline conditions and for the conditions that would result from pollutant removals under the rule. The final BAT limitations and PSES for Subparts B and E would result in a significant reduction of dioxins and furans in fish tissues. As a result, the largest quantifiable and monetizable water benefit is a reduction in number of potential excess cancer cases from the consumption of contaminated fish by recreational and subsistence anglers. The next largest category of monetized benefits includes recreational fishing benefits derived from lifting of all 19 existing dioxin/furan-related fish consumption advisories in waters downstream from mills in the Bleached Papergrade Kraft and Soda and Papergrade Sulfite subcategories. Removing fish consumption advisories would be expected to increase the number of recreational anglers at sites where advisories are lifted and to increase fishing enjoyment by existing anglers. Three of the 19 receiving streams with dioxin/furan-related fish consumption advisories also have advisories in place for other contaminants (from other sources) that will not be affected by this rule. No monetized benefits are expected to accrue for these streams at this time. Quantified, non-monetized benefits include reduction in exceedances of aquatic life and health-based ambient water quality concentrations.

(1) Fish Consumption Cancer Risks and Non-cancer Hazards. Upper-bound individual cancer risk, aggregate risk, and non-cancer hazards from consuming contaminated fish are estimated for recreational, subsistence, and Native American subsistence anglers. At proposal, concentrations of carcinogenic and systemic toxicants in fish were estimated using two site-specific models—a simple dilution model and EPA's draft Dioxin Reassessment Evaluation model (DRE)(DCN 14650). For the final rule, EPA used only the DRE model to estimate TCDD and TCDF levels in fish below 92 mills discharging into 73 receiving streams, as well as individual cancer risks and non-cancer hazards. Of these mills, two in the Bleached Papergrade Kraft and Soda subcategory discharge through the same pipe and therefore were treated as a single discharger. As a result, a total of 91 discharges from 92 mills were evaluated for the water quality assessment. EPA continues to use the simple dilution model to evaluate other chlorinated organics (i.e., three carcinogens and four systemic toxicants). EPA believes the DRE approach provides more reliable estimates of dioxin and furan fate and transport in the environment for use in human health assessments. The reasons for relying exclusively on the DRE for assessing impacts due to dioxin and furan are explained in greater detail in

Chapters 4 and 8 of the Economic Analysis (DCN 14649).

EPA is also updating fish consumption rates used to estimate cancer and non-cancer hazards. At proposal, EPA used 25 g/day for recreational anglers, and 145 g/day for subsistence anglers. The revised estimates are 21 g/day for recreational anglers and 48 g/day for subsistence anglers, based on data provided by the nationally based ''Continuing Survey of Food Intake by Individuals'' (CSFII), conducted by the U.S. Department of Agriculture. EPA is also using an updated fish consumption rate for Native American subsistence populations of 70 g/day, based on two studies (CRIFTC, 1994; Wolfe and Walker, 1989, in rulemaking record). This consumption rate represents an average fish consumption rate for Native Americans. (See Environmental Justice Analysis in Chapter 8 of the Economic Analysis, DCN 14649).

Projected individual cancer risks differ among the evaluated mills and among recreational, subsistence, and Native American subsistence fishermen due to the differences in consumption rates. TCDD and TCDF contribute most of the estimated cancer risks. The final BAT/PSES for the papergrade sulfite and Bleached Papergrade Kraft and Soda subcategories are projected to reduce average baseline individual cancer risks up to about one order of magnitude for each affected group—recreational, subsistence, and Native American subsistence populations. At both baseline and post-compliance, Native American subsistence populations are at about one order of magnitude higher risk than recreational anglers and less than one order of magnitude higher risk than subsistence fishermen in this assessment because of their comparatively higher fish consumption rates.

At proposal, EPA estimated exposed recreational and subsistence fishermen based on a comparison of creel survey results to licensed anglers in counties adjoining pulp mill streams. Based on these surveys, EPA estimated that 29 percent of county fishermen would use affected stream reaches and therefore could be exposed to contaminated fish. Since proposal, EPA has considered additional recreational angler survey information and has determined that a range of 10 percent to 33 percent of adjacent county-licensed anglers provides effective upper and lower bounds to the fishing effort expected on most affected stream segments. EPA's benefit estimation methodology is described in Chapter 4 of the Economic Analysis (DCN 14649).

EPA estimated the reduced annual cancer cases for combined recreational and subsistence angler populations as a result of the final BAT/PSES for the Papergrade Sulfite and Bleached Papergrade Kraft and Soda subcategories. The projected number of increased cancer cases for this population under baseline conditions due to pulp and paper discharges is 0.83 to 2.76 annual cancer cases. EPA estimates this number would decline to 0.1 to 0.35 excess cancer cases per year after implementation of the final BAT/PSES, thus eliminating approximately 0.73 to 2.41 annual cancer cases.

For Native American subsistence fishermen, EPA evaluated an upper bound total risk at baseline and post-compliance with the selected BAT/PSES. EPA assumed that the total population of the tribes with treaty-ceded fishing rights near pulp and paper mills consumed an average of 70 g/person/day of TCDD/TCDF contaminated fish. The projected number of increased cancer cases for this population under baseline conditions due to pulp and paper discharges is 0.14 annual cancer cases. EPA estimates this number would decline to 0.008 excess cancer cases per year after implementation of the final BAT/PSES.

With respect to non-cancer benefits, EPA examined the current discharge of four pollutants that have reference doses (RfDs) contained in EPA's Integrated Risk Information System (IRIS). The four pollutants are chloroform, pentachlorophenol, 2,3,4,6-tetrachlorophenol, and 2,4,5-trichlorophenol. The RfD represents an estimate, with uncertainty spanning perhaps an order of magnitude, of daily exposure—expressed in milligrams per kilogram of body weight per day (mg/kg/day)—that is likely to be without an appreciable risk of deleterious effects to a given population during a lifetime. (EPA notes that this analysis considers only the contribution of Subpart B and E pulp and paper current discharge effluent to the RfD; the contribution from other sources (background level of exposure) is not evaluated.)

For the four pollutants with RfDs in IRIS, EPA used the simple dilution model to determine fish tissue concentrations. EPA then estimated whether human consumption of fish by recreational, subsistence, and Native American subsistence populations exposed to the pollutants below pulp and paper mills would exceed a chemical-specific noncancer hazard quotient of 1.0. Hazard quotients are based on the relationship between fish tissue concentrations, fish consumption, and RfDs. If a hazard quotient exceeds 1.0, adverse effects might occur. None of the four pollutants with RfDs in IRIS is estimated to exceed a non-cancer hazard quotient of 1.0 under baseline or BAT/PSES conditions for recreational, subsistence, or Native American subsistence anglers.

EPA did not use the reference dose (RfD) approach to evaluate potential noncancer effects associated with dioxin/furan. The use of an RfD for dioxin/furan presents special problems. If EPA were to establish an RfD for dioxin/furan using the standard conventions of uncertainty, the RfD value would likely be one to two orders of magnitude below average background population exposure. As stated above, the RfD is a level that is likely to be without an appreciable risk; it is not an ''action level'' or exposure level where non-cancer effects are predicted. Where the RfD is below background levels, and where effects are not readily apparent at background levels, it is not appropriate to use the RfD for quantifying benefits.

As an alternative to using the RfD, EPA evaluated potential noncancer effects of dioxin/furan by comparing the modeled incremental exposure of dioxin/furan from fish consumption (based on results from the DRE model) to estimated ambient background levels (i.e., 120 picograms of toxic equivalents/day (pgTEQ/day)). EPA estimates that adverse impacts associated with dioxin/furan exposures may occur at or within one order of magnitude of average background exposures. As exposures increase within and above this range, the probability and severity of human noncancer effects most likely increases. EPA's analysis shows that the estimated dioxin/furan exposure from pulp and paper effluent at baseline exceeded estimated ambient background exposure by an order of magnitude for two mills, with the size of the exposed population ranging from 4,910 to 16,205 recreational and subsistence anglers. The selected BAT/PSES are projected to reduce the incremental exposure from fish consumption to a level that was not significantly different from estimated ambient background exposure. The size of the recreational and subsistence angler population exposed to dioxin/furan doses exceeding one order of magnitude greater than the background level would be zero under the selected BAT/PSES.

For Native American subsistence populations with treaty-ceded fishing rights, the maximum dioxin/furan exposure under baseline conditions is projected to be 803 pgTEQ/day. Under the selected BAT/PSES, the maximum exposure is reduced to 39 pgTEQ/day,

which is less than estimated background levels for the United States.

(2) Impact of BAT/PSES Controls on Dioxin/Furan-Related Fish Consumption Advisories. EPA estimates that all 19 dioxin/furan-related fish consumption advisories in place downstream of papergrade sulfite and bleached papergrade kraft and soda mills as of December 1995 would be lifted some time after the rule is implemented. Recent evidence indicates that dioxin/furan fish tissue concentrations decline within several years of removing dioxin/furan discharges, which is more rapidly than previously thought (see Chapter 9 of the Economic Analysis, DCN 14649). EPA accounts for potential latent dioxin/furan contributions from sediment to fish tissue by assuming a three-year lag before cancers from fish tissue consumption are reduced or dioxin/furan-related fish tissue advisories are lifted.

(3) Exceedances of Human Health-Based Ambient Water Quality Concentrations (AWQCs). EPA also has compared the modeled in-stream pollutant concentrations to human health water quality criteria or other toxic effect values, which are referred to as health-based AWQCs. Exceedances of health-based AWQCs indicate existing human health-based water quality problems.

EPA has analyzed the health-based AWQCs for the ingestion of organisms and the ingestion of water and organisms based on the simple dilution model. EPA estimates that no mills exceed the health-based AWQCs for ingestion of organisms only under baseline conditions or under the final rule. With respect to the ingestion of water and organisms, at baseline, three mills exceed AWQCs for two pollutants, chloroform and pentachlorophenol (a total of four exceedances). Under the rule, only one mill exceeds AWQCs (for pentachlorophenol).

EPA did not estimate exceedances of AWQCs for dioxin and furan because the simple dilution model is not well-suited for use in estimating human health effects associated with water column concentrations of hydrophobic chemicals like dioxin and furan. EPA did not use the DRE model for this analysis for dioxin/furan because results of the DRE model would not be comparable with AWQCs.

(4) Aquatic Life Benefits. EPA used the simple dilution approach to estimate exceedances of aquatic life AWQCs. This is a conservative approach that assumes all pollutants (including dioxin and furan) discharged to receiving streams are available to the biota. Although hydrophobic chemicals such as dioxins and furans will be associated primarily with suspended particulates and sediments, some concentrations will also be found in the water column near the discharge point. This is particularly true if discharges are assumed to be continuous because even though the pollutants might eventually become associated with suspended solids and sediment, they would also be present in the water column in the vicinity of the discharge on an ongoing basis prior to partitioning. Therefore, although it is conservative, EPA believes that the simple dilution approach provides a reasonable estimate of impacts to aquatic life.

EPA compared modeled in-stream concentrations of toxic discharges to EPA's aquatic life AWQCs. EPA's modeling results show that receiving water concentrations for up to four pollutants (of 15 pollutants with chronic aquatic life AWQCs) at 19 mills exceed aquatic life criteria at baseline discharge levels (up to 25 total exceedances). The final BAT/PSES for the papergrade sulfite and Bleached Papergrade Kraft and Soda subcategories are projected to reduce these exceedances to one pollutant (TCDD) at six mills (six total exceedances). On average, the selected BAT/PSES will reduce color of effluent by approximately 2.5 percent compared to current discharges. This color reduction may have some aquatic life or recreational benefits depending on the natural color of the receiving water, but they are not quantifiable or monetizable at this time.

c. Monetization of Water Quality Benefits. Monetized benefits of the final BAT/PSES for mills in the Bleached Papergrade Kraft and Soda and Papergrade Sulfite subcategories are presented in Table VIII–6. EPA has monetized the human health benefits resulting from elimination of 0.73 to 2.41 cancer cases per year for the nation as a whole (see Section VIII.F.2.b.(1)). The projected benefits range from $2 million to $22 million.

EPA estimates the value to anglers of contaminant-free fisheries as a result of lifting 16 of the 19 dioxin/furan-related fish consumption advisories to be $2 million to $19 million. (Because these values are based on a benefits transfer from a study of contamination of the Great Lakes trout and salmon fishery, which may differ greatly from some of the areas affected by this rule, these values provide only a general sense of the magnitude of the benefits of the rule.) Because non-dioxin/furan fish consumption advisories (PCBs and mercury) will remain in place on three streams, EPA did not monetize the benefits of removing the dioxin/furan fish consumption advisories on these streams. EPA also estimates that recreational fishing would increase on the 16 streams by 115,000 angling days to 379,000 angling days post-compliance. However, the monetary value of this increase is not estimated because of the difficulty of determining the extent to which this increased participation reflects a net increase in fishing activity or merely a shift from other locations (see the Economic Analysis, DCN 14649, Chapter 4).

Because of dioxin/furan removals due to compliance with BAT limitations and PSES, sludge from pulp and paper mills may be disposed of through land application, instead of more costly landfilling or incineration. (Pursuant to a January 1994 Memorandum of Agreement between EPA and the American Forest and Paper Association (AF&PA), a maximum dioxin/furan concentration of 50 ppt is allowed for land application of sludge or a sludge-derived product. See DCN 14399). Mill sludge disposal costs could be expected to decline by $8 million to $16 million. EPA estimated these values based on the reduced tonnage of expected dioxin/furan-contaminated sludge, which in turn was based on the proportional reduction of dioxin/furan in effluent (see the Economic Analysis, DCN 14649, Chapter 8).

Total monetized water-related benefits for all the above categories range from $12 million to $57 million.

As noted previously, the above estimates do not include the benefits that have been identified but not monetized, such as health effects for Native American subsistence fishermen, reduction in AWQC exceedances, reduction of projected non-cancer effects and improvements in fish and wildlife habitat.

TABLE VIII–6.—MONETIZED WATER QUALITY BENEFITS OF FINAL BAT/PSES FOR BLEACHED PAPERGRADE KRAFT AND SODA AND PAPERGRADE SULFITE MILLS

Benefit category	Final BAT/PSES (millions 1995$)
Water-related Benefits	
Human health (recreational fish consumption)	$2–$22
Recreational angling	
''Contaminant-free'' fishery	$2–$19
Increased participation	+
Reduced Sludge Disposal Costs	$8–$16
Total Water-related Benefits	$12–$57

+ Positive benefits expected but not estimated.

H. Comparison of Costs and Benefits

This section provides the individual and combined costs, economic impacts, and benefits of the proposed and final CAA and CWA pulp and paper regulations described in earlier sections. See Table VIII–7. The costs and benefits of the CAA (MACT) rules apply to all 155 kraft, soda, sulfite and semi-chemical mills subject to final or proposed MACT requirements, while the costs and benefits for the final CWA (BAT/PSES) regulations apply to the 96 mills in the Papergrade Sulfite and Bleached Papergrade Kraft and Soda subcategories.

Using the pre-tax annualized cost estimates reported in Section VIII.C, net monetized air-related benefits are estimated to range between net costs of $1,165 million to net benefits of $929 million per year for the final MACT I rule considered in combination with the pre-tax annualized cost estimates for the final BAT/PSES. Pre-tax annualized cost estimates are used as a proxy for the social costs of the rules. Net benefits of the proposed regulatory alternative for MACT II are $270 million to $352 million. Thus, the range of net benefits (disbenefits) of the final and proposed air quality standards is ($896) million to $1,281 million.

EPA did not estimate annual net benefits for the final BAT/PSES for the Papergrade Sulfite and Bleached Papergrade Kraft and Soda subcategories because so many categories of benefits are unmonetized that the comparison would be misleading.

TABLE VIII–7.—SUMMARY OF COSTS, ECONOMIC IMPACTS AND BENEFITS

	MACT I	MACT II	Combined air rules	Final BAT/PSES	MACT I and final BAT/PSES (96 mills)	MACT I, MACT II, and final BAT/PSES (96 mills)	MACT I, MACT II, and final BAT/PSES (155 mills)
Capital Costs	$501	$258	$759	$1,039	$1,394	$1,524	$1,799
Pre-Tax Annualized Costs*	$125	$32	$157	$263	$351	$366	$420
Monetized Annual Benefits	($1,040)–$1,054	$302–$384	($739)–$1,438	$12–$57	($1,028)–$1,111	NE	($727)–$1,495
Net Annual Benefits (Benefits-Costs)	($1,165)–$929	$270–$352	($896)–$1,281	NE	NE	NE	NE
Projected Mill Closures	0	0	1	1	2	3	3
Potential Job Losses (due to mill closures)	0	0	ND	ND	900	ND	ND
Projected Firm Failures	0	0	0	0	0	0	0

* Pre-tax costs are greater than the post-tax annualized costs shown in Tables VIII–1 and VIII–3.
Net costs (where costs exceed benefits) are shown in parentheses.
NE = not estimated.
ND = not disclosed to protect confidentiality.
Figures in table reflect rounding.

I. Costs and Benefits of Rejected Options for the Bleached Papergrade Kraft and Soda Subcategory—Option B and TCF

1. Air Benefits

As noted in Section VIII.F.1, the oxygen delignification technology used as a component of Option B and TCF increases emissions of certain pollutants and, hence compliance costs to meet MACT I standards; the implementation of additional MACT controls, however, also increases MACT-related removals. As a result, both MACT I costs and benefits increase where oxygen delignification is utilized. (As noted above, only VOC, PM, and SO_2 benefits are monetized here.) However, because the MACT I technologies control all of the increased emissions associated with oxygen delignification, there is no increased net benefit of the CWA and CAA technologies to ambient air quality. Rather, the net monetized benefits of MACT I in combination with Option B or TCF are equivalent to the monetized benefits of MACT I in combination with the final BAT/PSES. Thus, MACT I benefits associated with reducing VOCs under either Option B or TCF range from $29 million to $1,050 million. MACT II VOC reduction benefits range from $2 million to $84 million. Therefore, total monetized VOC benefits of the air quality standards under either Option B or TCF are $31 million to $1,134 million. PM related disbenefits for MACT I are $1 million, while MACT II PM benefits are $300 million for a total PM benefit of approximately $299 million, for either Option B or TCF. SO_2 related disbenefits for MACT I are from $1,043 million down to $0, while MACT II SO_2 benefits are from $0.1 to $0.3 million.

Total monetized benefits (disbenefits) for MACT I are ($1,015) million to $1,049 million under BAT/PSES Option

B or TCF (see the Economic Analysis, DCN 14649, Chapter 8). Aggregate annual benefits attributed to MACT II range in value from $302 million to $384 million. Combining the benefits of the final and proposed air quality standards yields a range of total annual air quality benefits (damages) from ($713) million to $1,433 million.

2. Water Benefits

The water quality benefits described in this section include benefits for rejected BAT/PSES options for the Bleached Papergrade Kraft and Soda subcategory in combination with benefits for the selected BAT/PSES for the Papergrade Sulfite subcategory. (Benefits for the two CWA subcategories were also combined in Section VIII.G.2 for the selected BAT/PSES.) EPA estimated the human health benefits that could be expected if either of the rejected BAT/PSES options for the Bleached Papergrade Kraft and Soda subcategory—Option B or TCF—were implemented. For combined recreational and (non-Native American) subsistence angler populations using the same fish consumption rates EPA used for the selected BAT/PSES, Option B is projected to eliminate approximately 0.75 to 2.50 annual cancer cases from the baseline of 0.83 to 2.76 annual cancer cases projected to result from the mills' discharges at [mid-1995] levels, leaving a residual of 0.08 to 0.26 excess cancer cases per year. Here, as in Section VIII.G.2.b(1), excess cancer cases refers to cancer cases attributable solely to pulp and paper dioxin/furan discharges. This represents a reduction of 90 percent from baseline. The monetized value of this reduction is $2 to $23 million. TCF is projected to result in a reduction from the mid-1995 discharge baseline of 0.83 to 2.76 cases to 0.0 cases, which increases the benefits from TCF by $0.1 million to $2.7 million, compared to Option B. Because chlorine or chlorinated compounds are not used for bleaching, no dioxin formation was attributed to the mills under this option. Although some background dioxin cancer risk would remain that is attributable to sources other than current pulp and paper discharges, no residual cancer risk would remain from bleached papergrade kraft and soda mills.

For Native American subsistence fishermen, EPA evaluated cancer risks at baseline and under Option B. To estimate the maximum potential risk, EPA assumed that the entire population of the tribes with treaty-ceded fishing rights near pulp and paper mills would consume an average of 70g/person/day of TCDD/TCDF contaminated fish. With this level of consumption, the projected increased number of cancer cases for this population at baseline would be 0.14 cancer cases/year. EPA estimates that this number would decline to 0.007 cancer cases/year if BAT/PSES based on Option B were promulgated and to 0.0 cases/year if BAT/PSES based on TCF were promulgated.

Both Option B and TCF would result in the removal of 19 dioxin/furan-related fish consumption advisories on streams downstream from bleached papergrade kraft and soda mills. EPA estimates that non-dioxin advisories will remain on three of those streams. Therefore, here as in Section VIII.G.2.c, EPA did not monetize the benefits of removing the dioxin/furan fish consumption advisories on these streams. EPA estimates the value to anglers of the 16 ''contaminant-free'' fisheries as a result of removing these advisories to be $2 million to $19 million. EPA also estimates that recreational fishing would increase on these 16 streams by an estimated 115,000 angling days to 379,000 angling days post-compliance. However, the monetary value of this increase is not estimated because of the difficulty of determining the extent to which this increased participation reflects a net increase in fishing activity or merely a shift from other locations. These results are the same as those presented for the selected BAT/PSES. Because of dioxin removals, sludge disposal costs for both Option B and TCF could be expected to decline by $8 million to $16 million (see the Economic Analysis, DCN 14649, Chapter 8).

With respect to non-cancer human health benefits, none of the four pollutants with RfDs is estimated to exceed a non-cancer hazard quotient of 1.0 under baseline or under conditions associated with rejected Option B for recreational, subsistence, or Native American subsistence anglers. The same is true for the selected BAT/PSES. Similarly, Option B would reduce projected health-based AWQC exceedances to one facility for one pollutant (pentachlorophenol). Under TCF, EPA estimates that there would be no exceedances of health-based AWQCs. For dioxin, EPA estimates that Option B would reduce incremental exposure from fish consumption to a level that is not significantly different from ambient background exposure. Under TCF, chlorine and chlorinated compounds are not used for bleaching, and therefore no dioxin was attributed to mills under this option.

With respect to aquatic life benefits, EPA's modeling results show that, for the four pollutants exceeding chronic aquatic life criteria at 19 mills (up to 25 total exceedances), rejected Option B would reduce these exceedences to one pollutant (TCDD) at three mills (three total exceedences). TCF would reduce these exceedances to zero.

In addition to the benefits of reducing dioxin in fish, EPA investigated other potential benefits associated with Option B and TCF, including color, COD, AOX, and chronic sub-lethal toxicity.

Increased color in a receiving water can decrease light penetration there, thus resulting in shifts of phytoplankton community structure to undesirable species, reduced primary productivity (which can alter the trophic structure of fish communities), and elevated receiving stream temperatures. However, the actual impact on the receiving water of reducing color in mill effluent is highly site-specific and depends in particular on the natural color of the receiving water and other factors. Therefore, the monetized benefits will also be site-specific, to the extent that they can be determined at all. EPA is not promulgating national technology-based limitations or standards for color, but rather has determined that the potential aesthetic or aquatic impacts are best addressed on a site-specific basis by the permitting or pretreatment authority where necessary. See Section VI.B.3.e. Indeed, EPA notes that about eight mills currently have limitations for color in their NPDES permits, and an additional two mills have current color monitoring requirements where stream water quality requires such measures.

Lowering COD can protect the receiving water against oxygen depletion and is likely to reduce non-chlorinated organic compounds that cause chronic sub-lethal effects on aquatic life. Evidence indicates that this toxicity is associated at least in part with families of non-chlorinated organic materials. Several studies indicate that, as wastewater COD is reduced, indices of these chronic toxicity effects also are reduced. EPA is deferring regulation of COD to the individual permitting process for the time being, although EPA intends to promulgate effluent limitations guidelines and standards for COD for Subpart B mills in the future. See Section VI.B.3.d.

Although a statistically significant relationship between AOX and adverse environmental effects has not been established, EPA believes that reduction of AOX (a valid measure of the total chlorinated organic matter) will result in water quality benefits. See Section VI.B.3.c. However, these cannot be quantified at this time.

Compared to current discharges, the incremental benefits associated with OD (Option B) include: reduction of color (by 40 percent); COD (by 40 percent); AOX (by 84 percent); and chronic sub-lethal aquatic toxicity. TCF would also reduce color discharges (by 40 percent), COD (by 40 percent), AOX (by 96 percent) and chronic sub-lethal aquatic toxicity. The water quality benefits of the rejected options are shown in Table VIII–8.

TABLE VIII–8.—MONETIZED WATER QUALITY BENEFITS OF REJECTED BAT/PSES OPTIONS FOR BLEACHED PAPERGRADE KRAFT AND SODA & PAPERGRADE SULFITE MILLS

Benefit category	Option B (millions 1995$)	TCF (millions 1995$)
Water-related Benefits		
Human health (Recreational fish consumption)	$2–$23	$2–$25
Recreational angling		
"Contaminant-free" fishery	$2–$19	$2–$19
Increased participation	+	+
Reduced Sludge Disposal Costs	$8–$16	$8–$16
Total Monetized Water-related Benefits	$12–$58	$12–$60

+ Positive benefits expected but not estimated.

Combined annual air and water benefits related to Option B for all 155 mills regulated by today's rule, including final MACT I, proposed MACT II and BAT/PSES based on Option B, would total ($701) million to $1,491 million. Combined annual air and water benefits related to TCF, including final MACT I, proposed MACT II and BAT/PSES based on TCF would total ($701) million to $1,493 million.

J. Benefit-Cost Comparison Using Case Studies

Many benefits are highly site-specific. At proposal, EPA estimated the costs and benefits of the pulp and paper rule at three sites using a case study approach. EPA has expanded the case study analysis to incorporate additional sites. The case studies focus on water quality benefits, resulting from installation of BAT/PSES technologies, with air quality benefits modeled for case study mills as they are at the national level (see Section VIII.G.1, above). The three case studies at proposal were (1) the Penobscot River in Maine, (2) the Wisconsin River in central Wisconsin, and (3) the lower Columbia River in Washington and Oregon. In addition, a qualitative retrospective case study was conducted of the Leaf River in Mississippi. These case studies were selected to provide geographic representation of the impacts of the proposed rule, taking data availability into consideration.

For the final rule, the three quantitative case studies were updated to reflect EPA's revised analysis of costs, loadings, and human health risks to sport anglers. In consideration of environmental justice, EPA also evaluated health risks to Native American anglers in the Penobscot and Columbia River case study areas.

The four new case studies of monetized benefits analyze: (4) the Lower Tombigbee and Mobile River watersheds in Alabama, (5) the Pigeon River in North Carolina, (6) the Samoa Peninsula in California, and (7) the upper Columbia River in Washington State and British Columbia, Canada. These new case studies provide EPA with the first real empirical evidence of already-realized benefits that can be expected from adoption of the final BAT/PSES limits. Although a portion of the water-related benefits estimates in these newer case studies are based on actual outcomes from installing pollution control equipment (i.e., a retrospective analysis), estimates of the benefits of MACT standards in these case studies are prospective, based on expected future benefits.

The case studies compare costs and benefits at specific bleached papergrade kraft and soda mills in these seven areas across the country, some of which have not installed technologies comparable to the bases for BAT/PSES and some of which have installed such technologies, thereby allowing the retrospective assessment of BAT/PSES costs and benefits. Where mills have installed BAT-like technologies, capital investments may include: 70 percent to 100 percent substitution; oxygen delignification plus 100 percent substitution; and/or totally chlorine-free technologies.

EPA evaluated control cost estimates and air benefits for emission controls necessary to meet the MACT I and II standards on a prospective basis, assuming the level of controls currently existing at mills in the case study areas as a baseline.

As with the national-level analysis, significant water-related benefits are derived from removal of dioxin/furan from fish, and air-related benefits from improved agriculture and health from reduced ozone emissions. However, the case studies also address a wider range of water-related benefits, including some site-specific recreational benefits such as surfing, boating, white water rafting, non-consumptive uses and non-use benefits that result from improved color in the receiving water, improved odor and removal of health advisories. The case studies provide a more complete picture of the range of water-related benefits that may be expected from the rule, although a number of identifiable benefits, including improvements in ecological conditions and reductions of non-cancer health effects remain unquantified and unmonetized.

Benefits and costs for the case studies are summarized and compared in Table VIII–9. The monetized benefits range from two percent to 387 percent of BAT/PSES compliance costs. The case study results indicate that monetized benefits may be of the same order of magnitude as costs at individual sites.

From a water quality perspective, the case studies provide a cross-section of mills and receiving waters nationwide, including fast- and slow-moving streams, lakes and ocean waters.

Using receiving water and population characteristics, EPA attributed benefits from the case study sites to all bleached papergrade kraft and soda and papergrade sulfite mills. As a sensitivity analysis, EPA used the water quality benefits from the case studies to estimate the national level water quality benefits of the integrated final and proposed rule for the Bleached Papergrade Kraft and Soda and Papergrade Sulfite subcategories. Based on the case studies, monetized benefits from the water rules (Option A) would be expected to range from $91 million to $451 million per year, or from 35

percent to 170 percent of water-related costs.

The case studies were not selected to be, and are not necessarily, representative of national benefits with respect to air quality.

TABLE VIII–9.—COMPARISON OF POTENTIAL ANNUAL BENEFITS TO POTENTIAL ANNUALIZED COSTS FOR SEVEN CASE STUDY SITES

[Millions of 1995 dollars]

Site	Water-related benefits	Air-related benefits [b]		Total monetized benefits	Total compliance costs [a]
		MACT I	MACT II		
ORIGINAL CASE STUDIES					
Penobscot River	$0.7–$2.3	($9.5)–7.7	$0.1	($8.7)–10.1	([c])
Wisconsin River	$0.1–$1.5	($16.9)–15.6	$2.1	($14.7)–19.2	$9.3
Lower Columbia River	$1.5–$8.6	($26.9)–56.2	$0.7	($24.7)–65.5	$16.6
NEWER CASE STUDIES					
Lower Tombigbee and Mobile Rivers	$1.1–$12.0	($136.8)–113.2	$81.7	($54.0)–$206.9	$32.5
Pigeon River	$2.7–$8.7	($5.8)–$5.7	$2.1	($1.0)–$16.5	[c] $7.1
Samoa Peninsula	$0.1–$1.4	($5.0)–10.1	$0.0	($4.9)–$11.5	[d] $5.0
Upper Columbia River/Lake Roosevelt	$1.5–$11.6	NA	NA	$1.5–$11.6	$3.0

[a] The total compliance costs shown in this Table (for BAT/PSES, MACT I and proposed MACT II Option #1) differ from compliance costs used to determine economic achievability. The cost estimates for the case studies were based on custom analysis of technology in-place corresponding to the case study timeframes. In contrast, estimates used to determine economic achievability used a standard mid-1995 baseline for technology in-place

[b] Based on implementation of technologies consistent with Option A.

[c] Confidentiality agreements preclude disclosure of total costs for this site.

[d] This mill has indicated EPA's cost estimate is too high because EPA did not fully account for technology in-place.

NA = Not applicable.

IX. Incentives for Further Environmental Improvements

A. The Voluntary Advanced Technology Incentives Program

1. Introduction

EPA is promulgating BAT limitations today that will achieve significant pollutant reductions using technologies within the economic capability of the subcategory as a whole. At the same time, EPA wants to encourage the widespread use and perfection of technologies such as extended delignification and to promote the development of even more advanced technologies, such as those aimed at reducing bleach plant flow. EPA also wants to encourage the widespread use and perfection of TCF processes. These technologies and processes have the ability to surpass the environmental protection that would be provided by compliance with the baseline BAT. Indeed, EPA's vision of long-term environmental goals for the pulp and paper industry includes continuing research and progress toward such environmental improvement. The Agency believes that individual mills can be encouraged to make substantial environmental progress beyond the base level compelled by law. This industry's participation in the 33/50 program, its progress toward reducing toxic discharges in advance of the proposed BAT revisions, its joint initiative with the U.S. Department of Energy to reduce future energy demands, and its development and implementation of the Sustainable Forestry Initiative, among other voluntary environmental undertakings, indicate that an incentives program may be widely accepted and utilized by individual mills.

For this reason, EPA is establishing a Voluntary Advanced Technology Incentives Program to encourage mills in the Bleached Papergrade Kraft and Soda subcategory to move beyond today's baseline BAT technologies toward the ''mill of the future,'' which EPA believes will have a minimum impact on the environment. EPA also intends the program to serve as a pilot program for determining the effectiveness of regulatory incentives as a means of stimulating development of environmentally beneficial technologies. As a result of the Voluntary Advanced Technology Incentives Program, EPA hopes to achieve within sixteen years greater pollutant reductions than it could achieve solely by establishing a technological floor. Indeed, the development of increasingly more advanced bleach plant process technologies is a critical step toward the Clean Water Act's ultimate goal of eliminating the discharge of pollutants into the Nation's waters. See CWA Section 101(a)(1).

The BAT program under the Clean Water Act is widely and justifiably applauded as a critical tool in forcing the development and installation of environmentally beneficial technologies. The statute demands progress toward the goal of eliminating the discharge of all pollutants, CWA Section 301(b)(2)(A), but emphasizes that that progress must be ''reasonable.'' *Id.* This Voluntary Advanced Technology Incentives Program marries the twin objectives embodied in Section 301(b)(2)(A): compelling the industry to go as far as it reasonably can go, through the achievement of limits that are technically and economically achievable, while holding out through the Voluntary Advanced Technology Incentives Program an array of alternative effluent limits that EPA believes will lead to zero discharge. The baseline BAT limitations discharge EPA's statutory mandate: to promulgate limitations based on the best available technology economically achievable. The Voluntary Advanced Technology Incentives Program, in turn, promotes EPA's statutory goal: to establish limitations that act as a beacon to show what is possible.

EPA is codifying three tiers of Voluntary Advanced Technology BAT effluent limitations and two tiers of Voluntary Advanced Technology NSPS, which together form the backbone of the Voluntary Advanced Technology Incentives Program for mills in the Bleached Papergrade Kraft and Soda subcategory. The three BAT tiers are

labeled Tier I, Tier II and Tier III; the two NSPS tiers are labeled Tier II and Tier III. Tier III is the most stringent of the tiers. Each BAT tier is made up of an array of increasingly more stringent enforceable effluent limitations, culminating in the ultimate performance requirements for that particular tier. The NSPS tiers consist entirely of the ultimate performance requirements for each tier. In addition to the Voluntary Advanced Technology effluent limitations and NSPS codified today, EPA has also assembled a number of incentives relating to permitting and enforcement matters and public recognition. EPA hopes these incentives will encourage many mills to develop and install advanced and even innovative technologies that will lead the industry as a whole toward the elimination of pollutant discharges.

EPA believes it is appropriate as a matter of policy to offer mills incentives to reach beyond the baseline BAT and NSPS process technologies. Capital costs associated with the Tier I technology are substantially greater than the capital costs of Option A, which is the technology basis for the baseline BAT limits. Although over ten years a mill employing Tier I technologies will likely save money in operating costs, the capital outlay involved may discourage mills from doing more than the regulatory minimum. For Tiers II and III, the costs and risks are even more acute, when one considers the cost of research, development, and full scale commercial trials of technologies in the early stages of development and implementation, as well as the associated uncertainties concerning possible product impacts. EPA is interested in encouraging research, development and installation of emerging technologies in order to motivate the development of these technologies for broader commercial applications. As these technologies become proven and their efficiencies publicized, EPA hopes that they will become—in effect if not as a matter of law—the industry floor. Thus, EPA believes it is in the public interest to encourage mills today to develop environmentally beneficial technology and to reward mills that are innovative and forward-looking in their use of new and more environmentally effective technology despite its greater cost.

EPA received suggestions for an incentives program from a number of stakeholders. From these and other stakeholder suggestions, EPA has developed a program, presented below, that is intended to provide incentives for further long term environmental improvements. EPA is incorporating several types of incentives in this program. In addition, because mill-specific factors, including product specifications and existing equipment, will affect the technical approach taken and the environmental goal attainable by an individual mill, EPA is establishing several tiers of Advanced Technology performance objectives, each with limitations and standards specific to the model technology EPA is positing. In order to promote ambitious use of Advanced Technologies, EPA is offering greater incentives for greater reductions in pollutant discharge.

EPA recognizes that some mills in the Bleached Papergrade Kraft and Soda subcategory have already installed or have committed to install Advanced Technologies that are achieving or have the potential to achieve effluent limitations equivalent to the ultimate performance requirements of one or more of the Voluntary Advanced Technology Incentive Tiers. If these mills accept enforceable NPDES permit limitations at one of the Tier levels, they will qualify for the incentives program at that level. In some instances, therefore, the incentives will actually serve as rewards for effluent reductions already achieved.

2. Mechanics of the Incentives Program

The Voluntary Advanced Technology Incentives Program for the Bleached Papergrade Kraft and Soda subcategory will supplement the otherwise compulsory baseline BAT and NSPS program. EPA emphasizes that the Voluntary Advanced Technology Incentives Program is entirely voluntary; no mill in Subpart B is required to participate. Rather, mills subject to the baseline BAT limits and NSPS contained in Subpart B may enroll in the incentives program and thus subject themselves to more stringent technology-based limitations corresponding to the Incentives Tier they select. For example, a mill that determines that it can achieve Tier II limits may designate itself as a BAT Tier II mill. A mill with more than one fiber line subject to Subpart B may choose to enroll all or some of its fiber lines in the Voluntary Advanced Technology Incentives Program. A mill wishing to experiment with advanced or even innovative bleaching technologies also may choose different Tiers for different fiber lines. After the mill enrolls in the Voluntary Advanced Technology Incentives Program, the permit writer must place the corresponding BAT limitations in the mill's permit. Achievement of the Advanced Technology BAT limitations thereafter would be compulsory for that mill. A mill that chooses not to participate in the program will receive the baseline BAT limitations or NSPS; similarly, a mill that chooses to enroll some but not all of its Subpart B fiber lines in the Voluntary Advanced Technology Incentives Program will receive baseline BAT limitations or NSPS for its non-participating fiber lines.

EPA expects that an interested mill would formally enroll in the Voluntary Advanced Technology Incentives Program prior to issuance of its next NPDES discharge permit. Enrollment can be made by indicating the mill's intent on its permit application or through separate correspondence to the permitting authority as long as the signatory requirements of 40 CFR 122.22 are met. However, as discussed in more detail in Section IX.A.7 below, EPA assumes that most mills, for practical purposes, will decide whether to participate in the Voluntary Advanced Technology Incentives Program in the next year in order to assure that they will have the maximum amount of time to achieve the various Tier limitations and to receive the additional compliance time for MACT, established under these rules for mills enrolled in the Voluntary Advanced Technology Incentives Program. Any mill can voluntarily enter at any tier appropriate to its individual circumstances. Further, mills that enter either at Tier I or Tier II may decide, after making such a commitment in permits but before termination of the appropriate compliance period (i.e., not later than six years after publication of these rules—Tier I, or not later than 11 years after publication of these rules—Tier II), to commit to the requirements of a more stringent tier (i.e., Tier II or Tier III). Such mills will be subject to the deadlines specified in the regulation for the newly chosen tier.

Existing dischargers volunteering to participate in the incentives program would receive BAT limitations that become progressively more stringent over time. Although applied in stages, the limitations represent a continuum of progress that a participating mill commits, and is required, to achieve. At the first stage in the continuum are limitations for the enrolled fiber line that reflect either a mill's existing effluent quality or its current technology-based permit limits for the BAT parameters, whichever are more stringent. See 40 CFR 430.24(b)(1). For the bleach plant parameters, such as dioxin, existing effluent quality would be determined at the bleach plant, while existing effluent quality for AOX would be determined at the end of the pipe based on loadings attributable to that

fiber line. *Id*. The next stage in the continuum consists of enforceable interim milestones. Under one set of milestones, existing dischargers enrolled in Tiers II or III are required to meet interim BAT limitations equivalent to the baseline BAT limitations by April 15, 2004. 40 CFR 430.24(b)(3). (By that date, dischargers enrolled are required to meet the baseline BAT limitations for all pollutants, except for Tier I; the AOX limitation for mills enrolled in Tier I is the ultimate performance requirement for Tier I. *Id*.) Under the second set of milestones, existing dischargers enrolled in any tier are required to meet enforceable requirements determined by the permitting authority based on best professional judgment; these milestones would be expressed as narrative or numeric conditions in the mill's NPDES permit. 40 CFR 430.24(b)(2). EPA intends the milestones to reflect each step in a mill's progress toward achievement of the Tier's ultimate performance requirements. Elsewhere in today's **Federal Register**, EPA is proposing to require each participating mill to submit to its permitting authority a plan detailing the steps it plans to take (with corresponding dates) in order to meet its applicable BAT Tier limitations. Under the proposed regulation, permit writers would be authorized to use the information in the milestone plan as a basis for setting milestone limitations. The final stage in the BAT continuum represents the ultimate Advanced Technology performance levels for the Tier selected. 40 CFR 430.24(b)(4)(i). As noted above, the Voluntary Advanced Technology Incentives Program is also available for new sources that elect to exceed baseline NSPS requirements. See 40 CFR 430.25(c). For new sources (as defined at 430.01(j)), the incentives program begins at Tier II. The ultimate Tier II and Tier III performance requirements constitute NSPS for such mills, with the addition of standards for conventional pollutants at the baseline NSPS level. See 40 CFR 430.25(c)(1) and (2). The NSPS Tier II and Tier III performance requirements are the same as the ultimate BAT Tier II and Tier III performance requirements for BAT. As required by CWA Section 306, new sources must comply with the applicable NSPS upon commencing operation; therefore, the incremental approach of achieving progressively more stringent performance levels discussed above for existing sources would not apply to new sources enrolled in the incentives program.

In addition to Voluntary Advanced Technology BAT limitations and NSPS, the NPDES permit of a mill enrolled in the Voluntary Advanced Technology Incentives Program will need to contain all other permit limitations and conditions otherwise applicable to the mill, including any conventional pollutant limitations and standards, any water quality-based effluent limitations required under CWA Section 301(b)(1)(C), and best management practices provisions, including those promulgated today. Schedules for complying with those requirements, if any, are determined by the applicable law; nothing in this incentives program alters in any way those compliance deadlines.

Because mills enrolling in the Voluntary Advanced Technology Incentives Program are subject to more stringent BAT limitations and NSPS than EPA could otherwise compel through national effluent limitations guidelines, EPA has assembled a package of rewards and incentives for participating mills. The public recognition incentive is available as soon as a mill accepts Voluntary Advanced Technology BAT limitations in its NPDES permit. The reduced monitoring incentive applicable to dioxin, furan, chloroform and the 12 chlorinated phenolic pollutants is available as soon as participating mills achieve those limitations. See 40 CFR 430.02(c). The reduced monitoring incentive applicable to AOX is available only after the ultimate Advanced Technology performance level for that pollutant is achieved. See 40 CFR 430.02(d) and (e). The remaining incentives, including greater permit certainty, reduced inspections, and reduced penalties, are available only after the mill achieves all of the ultimate Advanced Technology performance levels.

EPA has decided not to make the Voluntary Advanced Technology Incentives Program available to indirect discharges at this time because it would be much more difficult to administer than the baseline PSES program and therefore would impose substantial burden on local governments. Further, EPA does not believe that commitments by indirect dischargers to reduce AOX or flow levels warrants any delay in compliance with limitations on dioxin and furan due to POTW pass-through and biosolids contamination concerns. Similarly, EPA has not identified feasible technologies beyond BAT that can significantly reduce pollutant discharges from mills in the Papergrade Sulfite subcategory at this time, and so is not able to develop an incentives program for this subcategory. Moreover, stakeholders have offered no specific suggestions or supporting information and data upon which EPA reasonably could develop a program for the Papergrade Sulfite subcategory. However, EPA will consider developing incentive programs for other subcategories as BAT limitations are promulgated for those subcategories.

3. The Technology Bases for the Voluntary Advanced Technology BAT Limitations and NSPS

In order to determine the appropriate Voluntary Advanced Technology BAT limitations and NSPS, EPA first selected a model technology for each Tier. For Tier I, which applies only to BAT, EPA determined that the most appropriate technology was extended delignification with complete substitution of chlorine dioxide for elemental chlorine, closing up wastewater discharges from the fiber line prior to bleaching, and efficient biological wastewater treatment. EPA selected this technology basis because it is available today (see discussion of BAT Option B and NSPS technology in Section VI.B.5.(a) and (b)), because it is economically achievable for mills voluntarily choosing to implement it (see Section IX.A.6), and because it represents an important step in the direction of a minimum impact mill.

The model technology for Tier II Voluntary Advanced Technology BAT limitations and NSPS consists of extended delignification with complete substitution of chlorine dioxide for elemental chlorine, supplemented with increased use of water conservation practices, water reuse practices, bleach plant filtrate recycling practices, and efficient biological wastewater treatment. EPA anticipates that Tier II mills will maximize the capability of extended delignification technology, thereby reducing the amount of chlorine dioxide used in bleaching. The model Tier II mill also will have highly effective pulping liquor spill prevention and control and will have evaporators that minimize the amount of black liquor carryover, to allow for extensive condensate reuse. EPA expects that Tier II mills also will employ a closed fiber line prior to bleaching improved water reuse within the bleach plant, and will recycle a portion of bleach plant filtrate back through the fiber line to the recovery cycle. The Tier II Advanced Technology BAT limitations and NSPS represent the performance demonstrated by mills that minimize effluent flow and reduce the formation of chlorinated organic compounds using these technologies and practices. Three mills in the United States are approaching the reduced wastewater flow levels equivalent to Tier II, which leads EPA

to conclude that flow reduction technologies are emerging. Although the flow volume projected or reported by these mills excludes pulping area or evaporator condensates, which EPA includes within its Tier II flow limitation, EPA expects that over the next ten or eleven years condensate reuse strategies and discharge flow reduction technologies will mature to allow mills to achieve the pulping area condensate, evaporator condensate and bleach plant wastewater flow level being codified today as part of Tier II. For further discussion of EPA's rationale for selecting this technology as the basis for Voluntary Advanced Technology BAT limitations and NSPS at the Tier II level, see Section IX.A.6.

The model technology for the Tier III Voluntary Advanced Technology BAT limitations and NSPS represents what EPA believes can be achieved in 15 or 16 years by mills on the cutting edge of minimum effluent technology. In EPA's view, such mills will fully reuse pulping area and evaporator system condensates, have a closed fiber line prior to bleaching, and recycle the majority of bleach plant filtrates back to the recovery cycle. EPA expects that these mills will also operate efficient biological treatment systems. To achieve this degree of mill closure, in addition to the level of technology described under Tier II, EPA expects the model Tier III mill will have ''kidney'' technology to remove metals from bleach filtrate and chloride from the mill liquor cycle, and may perform extensive steam stripping or other treatment of condensates to allow for full reuse. Mills that choose to use ozone delignification may avoid the need for a chloride removal system. EPA also expects that the Tier III mills will have advanced process control systems and negligible losses of black liquor through leaks and spills. Finally, the model Tier III mill will likely have extended liquid storage capacity as part of its water recycle and liquor management systems to help maintain the good hydraulic balance required for low discharge flow operation. While no U.S. mill today is achieving these limitations, EPA believes that the continuing progress being made by mills toward closed-loop processing will lead to greater innovation regarding technologies and practices necessary to achieve the Tier III limitations. For further discussion of EPA's rationale for selecting this technology as the basis for Voluntary Advanced Technology BAT limitations and NSPS at the Tier III level, see Section IX.A.6. For a more detailed discussion of the technology bases for the Voluntary Advanced Technology BAT Limitations and NSPS, see Voluntary Advanced Technology Incentives Program Technical Support Document (DCN 14488).

4. Pollutants Regulated by Voluntary Advanced Technology BAT and NSPS Limitations

Except for TCF-based processes, each Advanced Technology tier consists of limitations for dioxin, furan, chloroform, and 12 chlorinated phenolic pollutants monitored at the bleach plant. EPA is not codifying limits for these pollutants for TCF processes. As discussed in more detail below, each Tier also includes AOX limitations monitored at the end of the pipe and, depending on the Tier, limitations on lignin content or wastewater flow. In addition, each BAT Tier includes limitations on pentachlorophenol and trichlorophenol (when used as biocides), see 40 CFR 430.24(d), and each NSPS Tier includes limitations on BOD_5, TSS and pH, as well as biocides. See 40 CFR 430.25(c) and (d).

EPA has chosen to use AOX as a performance standard for each of the three Voluntary Advanced Technology BAT tiers because AOX is a measure of progress in reducing the total chlorinated organic matter in wastewaters resulting from the bleaching of pulps. In addition, the use of AOX rather than other measures of organic matter (e.g., BOD_5) will further encourage a pollution prevention approach instead of end-of-pipe treatment technologies. The final rule establishes minimum monitoring frequencies for AOX for each of the Tiers, except for TCF fiber lines. See 40 CFR 430.02(d) and (e). For TCF fiber lines, permit writers should determine the appropriate monitoring frequency to assure continued compliance with the AOX limitation.

In addition to the AOX criterion, EPA is establishing BAT limitations requirements for Tier I that include kappa numbers measured prior to bleaching and a narrative limitation calling for recycling of all filtrates generated prior to the point at which that kappa number is measured. See 40 CFR 430.24(b)(4)(i). The kappa number is a measure of lignin content in unbleached pulp, and is routinely determined by mills. EPA is not establishing minimum monitoring requirements for kappa numbers in this regulation. Permit writers maintain the authority to establish monitoring frequencies on a best professional judgment basis.

By meeting the kappa number limitations, Tier I mills will achieve substantial reductions in precursors for chlorinated organic pollutants found in lignin beyond reductions achieved by mills with conventional pulping processes. See DCN 14488. Some industry commenters suggested that EPA simply specify qualifying Advanced Technologies and require participating mills to employ one or more of those technologies in order to receive incentives. EPA rejected this approach because it would inhibit development of equivalent technologies that EPA cannot foresee today and is inconsistent with the traditional performance-based structure of technology-based effluent limitations under the Clean Water Act. Nevertheless, EPA agrees with these commenters that Tier I mills will in all likelihood employ extended delignification technologies or other technologies that similarly reduce the kappa number prior to bleaching; EPA, therefore, is requiring Tier I mills to achieve specified kappa numbers that reflect the performance capabilities of well-operated, extended delignification systems. In addition, EPA's Tier I limits reflect EPA's expectation that Tier I mills will be bleaching pulps with less lignin and, hence, will realize significant reductions in the amount of unrecoverable bleaching chemicals required to achieve their target brightness. By using less bleaching chemical, Tier I mills will further reduce the formation and discharge of chlorinated organic pollutants generated by bleaching pulps with chlorine-containing compounds, including chlorine dioxide. By recycling the pulping area filtrates, Tier I mills also will be implementing an important building block for long-term flow reduction goals, and eliminating an important source of weak black liquor discharge that would otherwise go to the mill's wastewater treatment plant. See DCN 14488.

By defining Tier I with parameter values (AOX, kappa numbers) and recycle requirements as presented above, EPA intends to provide maximum encouragement to as many mills as possible to achieve the performance of at least the initial threshold of the Advanced Technology program. Adopting threshold performance criteria that are too stringent could discourage mills from making additional capital investments beyond those necessary to achieve the baseline BAT. This could undermine one goal of the incentives program, which is to achieve the greatest environmental results possible consistent with mills' capital

investment cycles. Conversely, setting threshold criteria at levels that could be met by some mills that comply only with the baseline BAT limitations and that do not employ Advanced Technologies could serve as a disincentive to invest in Advanced Technologies that achieve dramatic reductions in pollutant loadings and flow. The kappa numbers defined above for Tier I, while at the upper end of the range of values achieved by extended delignification technologies, nonetheless appear to separate mills that employ them from mills that would use conventional pulping technologies to achieve the BAT limitations. See DCN 14488.

EPA is setting the Voluntary Advanced Technology BAT limitations and NSPS for Tier II and Tier III based on a different philosophy than for Tier I. EPA believes that Tiers II and III should reflect a movement toward the long-term goal of minimizing impacts of mills in all environmental media through partially or fully closed loop processes. For Tier II, EPA is setting an AOX limit based on a long-term average (0.10 kg/kkg) that is currently being achieved by some of the best mills in the industry. See DCN 14488. See 40 CFR 430.24(b)(4)(i) and 430.25(c)(2). For Tier III, EPA is setting an AOX limit based on a long-term average (0.05 kg/kkg) that is being achieved by only a very few mills, including one ECF mill. SeDCN 14488. Id. This ECF mill achieved the AOX limit only with hardwood furnish; moreover, it did so without the level of flow reduction anticipated for Tier III. See DCN 14488. It is the Agency's judgment, based on trends in ECF technology development to date, that with recycle of pulping and evaporator condensates and bleach plant filtrates necessary to achieve a wastewater flow of 5 m^3/kkg, and removal of chlorides from the liquor cycle, commensurate reductions in the mass of chlorinated organic pollutants contained in wastewaters discharged also are likely to occur. For this reason, it is EPA's judgment that the Tier III AOX limit will be achievable by advanced ECF mills for both hardwood and softwood furnishes as well as advanced TCF mills.

The Tier II and Tier III BAT limitations and NSPS also include restrictions on wastewater flow and a requirement that all pulping-area filtrates be recycled to chemical recovery prior to bleaching. See 40 CFR 430.24(b)(4)(i) and 430.25(c)(2). As discussed above for Tier I, the filtrates recycle requirement is an important step toward long-term flow reduction. Flow reduction and progress toward closed loop mill operations, in turn, are very important long-term environmental goals because pollutant releases to all environmental media would be minimized.

While mills currently measure end-of-pipe flow at the point of permitted discharges, Tier II and Tier III mills will be required to establish and maintain flow measurement equipment to verify compliance with the annual average reduced flow limits for those tiers for bleach plant and pulping area and evaporator condensates. EPA is not establishing minimum monitoring frequencies for flow in this regulation. Permit writers maintain the authority to establish monitoring frequencies on a best professional judgment basis. See 40 CFR 430.02.

Review of currently available data and literature indicates that the numerical values for flow set forth to define Tiers II (10 m^3/kkg) and III (5 m^3/kkg) are appropriately stringent reduced flow targets by comparison to current wastewater flow for mills with extended delignification technologies. See DCN 14488. EPA believes it is appropriate to include condensates as part of the specified wastewater flow volume because technologies are available today that allow for their recycle and reuse; use of these technologies therefore ensures that the cumulative volume of wastewater flow is reduced to the greatest extent possible. See DCN 14488. One technology in particular is the ''clean condensate alternative,'' which is a viable MACT compliance alternative. See 40 CFR 63.447. This alternative facilitates the segregation, treatment, and reuse of condensates and thus will assist mills in achieving the wastewater flow objectives. Inclusion of pulping and evaporator condensates in these reduced flow targets therefore is consistent with the ''clean condensate'' MACT compliance alternative and will promote flow reduction through recycle and reuse of the greatest possible volume of process wastewater.

EPA has the legal authority to establish Advanced Technology effluent limitations for non-chemical parameters, such as lignin content measurements and flow, and to do so where appropriate in narrative form. For Tier I, these limitations take the form of kappa numbers to measure lignin content in unbleached pulp and a narrative requirement to recycle pulping area filtrates; for Tiers II and III, they take the form of numerical limitations on process wastewater flows, as well as the narrative requirement to recycle pulping area filtrates. EPA has the authority to establish limits for lignin content in unbleached pulp, for recycle of filtrates, and for reduced process wastewater flows because each of these parameters functions as a restriction on the quantities, rates or concentrations of chlorinated organic pollutants and other pollutants in a mill's wastestream. See CWA Section 502(11). Restrictions on lignin content of unbleached pulp, measured as a kappa number, can be used to reduce the presence of precursors for chlorinated organic pollutants in a mill's wastewater. In addition, lignin itself is a material that includes polynuclear aromatic hydrocarbons; a number of polynuclear aromatic hydrocarbons are included in EPA's list of priority pollutants. See Appendix A to Part 403 (reprinted after 40 CFR 423.17). Recycling pulping area filtrates to the chemical recovery cycle prevents the discharge of weak black liquor, which includes inorganic pulping chemicals and dissolved wood substances. The dissolved wood substances include polynuclear aromatic materials, degraded carbohydrates, low-molecular weight organic acids, and wood extractives (resins and fatty acids). The toxicity of the materials contained in black liquor is well documented; see the BMP Technical Support Document (DCN 14489). Limits for process wastewater flow, in this case pertaining to total pulping area and evaporator condensate and bleach plant wastewater, move mills toward closed loop operations. Reductions in flow will have the effect of dramatically reducing mass loadings—and discharges—of non-chlorinated organics such as lignin and a variety of chlorinated organics in addition to dioxin, furan and the chlorinated phenolic pollutants specifically regulated today. Because those pollutants are far too numerous to measure individually (and some have not been specifically isolated and identified), EPA determined that it was impracticable to set mass-based limits for all of those pollutants. See DCN 14488. EPA judged that establishing flow levels for Tiers II and III would be the best way to control the discharge of these pollutants.

For the foregoing reasons, all of these Advanced Technology performance objectives qualify as effluent limitations under CWA section 502(11). As noted above, the filtrates recycle limitation is a narrative limitation. Nothing in the definition of effluent limitation in CWA section 502(11) or elsewhere in the CWA compels that restrictions on the discharge of pollutants be expressed in numeric form. *See NRDC* v. *Costle,* 568 F.2d 1369, 1380 (D.C. Cir. 1977). In this instance, EPA determined that the

restriction on filtrates (and hence the prevention of discharge of toxic materials) could not be expressed as a numeric limitation and therefore expressed that restriction in narrative form instead.

For further discussion of the effluent reductions and environmental benefits associated with the Advanced Technology BAT limitations and standards promulgated for these parameters, see DCN 14488.

5. Voluntary Advanced Technology BAT Limitations and NSPS

The Voluntary Advanced Technology BAT limitations consist of three separate components, which together comprise BAT for the particular Tier. See 40 CFR 430.24(b). The first and third components consist of numeric effluent limitations for the pollutants regulated by the Voluntary Advanced Technology Incentives Program. The second component consists of enforceable interim milestones. Under one set of milestones, existing dischargers enrolled in Tiers II or III are required to meet interim BAT limitations equivalent to the baseline BAT limitations by April 15, 2004. Under the second set of milestones, existing dischargers enrolled in any tier are required to meet enforceable requirements that are developed on a best professional judgment basis by the permitting authority; these milestones are expressed in either narrative or numeric form. Taken together, these three components constitute reasonable further progress toward the national goal of eliminating the discharge of all pollutants and for this reason represent BAT.

The Voluntary Advanced Technology NSPS consist of only one stage—the ultimate performance objectives for the Tier in question, with the addition of conventional limitations at the baseline NSPS level. See 40 CFR 430.25(c). This is because new sources, unlike existing sources subject to BAT, must design and construct their facilities to achieve NSPS upon commencing operation; sequencing limitations to achieve continuing progress would be inconsistent with this statutory mandate.

a. ''Stage 1'' BAT Limitations. In the regulation, EPA has codified the first set of numeric BAT effluent limitations as ''stage 1'' limitations to be applied in the absence of more stringent WQBELs. See 40 CFR 430.24(b)(1). Although expressed in this regulation in narrative form, EPA intends that the permitting authority will express that limitation in numeric form for each participating mill on a case-by-case basis. The ''stage 1'' limitations thus will be numeric values on dioxin, furan, chloroform, AOX, and 12 chlorinated phenolic pollutants that, for each pollutant, are equivalent to the more stringent of either the technology-based limit on that pollutant in the mill's last permit or the mill's current effluent quality with respect to that pollutant. *Id.* Existing effluent quality for AOX would be determined at the end of the pipe based on loadings attributable to that fiber line; for all other pollutants covered by the Advanced Technology BAT limitations, such as dioxin, existing effluent quality would be determined at the point where the wastewater containing those pollutants leaves the bleach plant. *Id.* These ''stage 1'' BAT limits represent the first step in the Advanced Technology BAT continuum and are enforceable against the participating mill as soon as they are placed in the mill's NPDES permit.

The purpose of the ''stage 1'' BAT limits is to ensure that, at a minimum, existing effluent quality is maintained while the mill moves toward achieving the ultimate Voluntary Advanced Technology BAT performance requirements for the Tier selected by the mill. As Advanced Technology permits are reissued for Tier II or Tier III mills, in particular, new ''stage 1'' limitations must be established to reflect the improving effluent quality of that mill. *Id.* Allowing a mill to degrade its effluent quality during development and installation of Advanced Technologies would be inconsistent with the statute's direction that BAT limitations achieve reasonable further progress toward the Clean Water Act's national goals. EPA's ''stage 1'' limitations, thus, are intended to capture continuously improving effluent quality.

EPA had considered, but rejected, attempting to codify the ''stage 1'' limits in numeric form. First, EPA has no way on this record to quantify and hence codify the existing effluent quality of each mill that is potentially eligible to participate in this program. Nor would such an attempt be wise, because EPA expects that mills considering participating in the Voluntary Advanced Technology Incentives Program will continue to improve their effluent quality up to and beyond the promulgation date of this regulation and, most likely, up to and beyond the dates that their existing effluent quality is translated into enforceable permit limits. Therefore, even if EPA could codify such ''stage 1'' limitations today, doing so would likely establish a less stringent technological floor than the permitting authority would be able to establish each time an Advanced Technology permit is issued prior to achievement of the ultimate Advanced Technology performance requirements.

Because the ''stage 1'' limitations reflect a level of technology that the mill is already employing or that was previously determined to be BAT for that mill, EPA has determined that the technology bases for the ''stage 1'' limits are both technically available and economically achievable. EPA has also determined that they would not impose any adverse non-water quality environmental impacts. EPA has determined that these ''stage 1'' limitations are the ''best'' available technology economically achievable for mills participating in the Voluntary Advanced Technology Incentives Program because they allow those mills to focus their resources on the research, development, testing, and installation of the technologies ultimately needed to achieve the Advanced Technology performance levels. Thus, ''stage 1'' limitations reflect ''reasonable further progress toward the national goal of eliminating the discharge of all pollutants,'' as called for by CWA section 301(b)(2)(A). EPA also considered all of the other statutory factors specified in CWA section 304(b)(2)(B) and concluded that nothing in EPA's analysis of those factors justifies selecting a different set of ''stage 1'' BAT limitations. For these reasons, EPA determined that the ''stage 1'' BAT limitations promulgated today represent the appropriate first rung of the Advanced Technology BAT ladder that participating mills will have committed to ascend.

EPA did not set ''stage 1'' limits at the baseline BAT level because baseline BAT limits are not a logical first step to meeting the ultimate Advanced Technology BAT limitations for the reasons set forth below. See DCN 14488. First, as a technical matter, mills subject to such interim limits most likely would need to install more chlorine dioxide generator capacity than they ultimately would use to achieve the Advanced Technology performance requirements. (EPA believes most Advanced Technology mills ultimately will employ complete substitution of chlorine dioxide for elemental chlorine, preceded by extended delignification processes—a sequence that calls for approximately 30 to 75 percent less chlorine dioxide than a mill would use to achieve the baseline BAT requirements depending on the degree of extended delignification used.) Second, as an economic matter, interim limitations driving a mill to over-design its chlorine dioxide generator would cause the mill to divert capital away

from the processes needed to achieve the ultimate Voluntary Advanced Technology BAT limitations. That diversion of resources undercuts one of EPA's principal assumptions regarding the economic achievability of the ultimate Voluntary Advanced Technology BAT limitations: that mills would be able to focus their capital and other resources entirely on those superior performance levels. Thus, EPA was concerned that by compelling achievement of baseline BAT limitations as ''stage 1'' limitations, EPA would unnecessarily inflate the overall cost of achieving the ultimate Advanced Technology limitations. This would likely cause some mills to conclude that they cannot sustain the overall costs of achieving the Voluntary Advanced Technology BAT limitations in an economically achievable manner. Other mills, in turn, might decide to absorb the additional costs by diverting resources from other environmentally beneficial projects that they might have voluntarily undertaken. The Clean Water Act authorizes EPA to consider non-water quality environmental impacts and other factors EPA deems appropriate in setting BAT limitations. See CWA Section 304(b)(2)(B). For these reasons, EPA believes that compelling achievement of the baseline BAT limits in the first instance would have had the contradictory and unintended effect of discouraging participation in the program, with the result that fewer mills ultimately would be motivated to achieve superior environmental performance. Finally, as discussed in more detail below, EPA is requiring mills at the Tier II and Tier III levels to achieve interim limitations equivalent to baseline BAT by April 15, 2004. See 40 CFR 430.24(b)(3).

b. Interim Milestones. As the second component of the Voluntary Advanced Technology BAT for the three Incentives Tiers, EPA is requiring the establishment of enforceable interim milestones. See 40 CFR 430.24(b) (2) and (3). EPA believes that interim milestones would incrementally benefit the environment during the period prior to achievement of the ultimate Advanced Technology performance levels and will ensure that participating mills make reasonable progress toward achieving the superior performance represented by the various Advanced Technology BAT Tiers.

EPA is promulgating two sets of enforceable interim milestones. The first set requires mills enrolled at the Tier II or the Tier III level to achieve limitations equivalent to baseline BAT limitations by April 15, 2004. 40 CFR 430.24(b)(3). (Mills enrolled at the Tier I level are required to achieve those limitations as well as the ultimate Advanced Technology limitations by that date. 40 CFR 430.24(b) (3) and (4).) EPA believes that this is a reasonable requirement not only because it ensures significant environmental progress consistent with CWA section 301(b)(2), but it also reflects the technology performance Tier II and Tier III mills are likely to be achieving by that date. Mills enrolled in Tier II and Tier III are expected to substantially modify pulping and bleaching processes (e.g., install extended delignification, ECF, or TCF bleaching) to comply with the Advanced Technology limitations. EPA expects that all Tier II or Tier III mills will install extended delignification and complete substitution (ECF) or TCF bleaching processes well in advance of achieving their wastewater flow objectives in order to allow sufficient time to design, install, test and adjust their other flow-related processes. In EPA's judgment, process changes sufficient to achieve baseline BAT limitations will occur by April 15, 2004. Once these processes are installed, the mill will be achieving or exceeding the baseline BAT limitations being required by that date. See DCN 14488.

EPA notes that mills required to achieve water quality-based or other effluent limitations equivalent to one or more of the Voluntary Advanced Technology BAT limitations are still eligible to enroll in the Voluntary Advanced Technology Incentives Program and to receive incentives for achieving the remaining Voluntary Advanced Technology limitations. However, the time for complying with water quality-based or other equivalent effluent limitations would be determined by applicable law, not by this Voluntary Advanced Technology Incentives Program. Therefore, for example, if a mill's NPDES permit compels immediate compliance with a dioxin limitation equivalent to the Voluntary Advanced (BAT) Technology limitation on dioxin because of water quality concerns or other requirements of state or federal law, this six-year milestone would not be available for that dioxin limitation. See CWA section 301(b)(1)(C).

The second set of enforceable interim milestones promulgated today applies to all mills enrolled in the Advanced Technology Incentives Program. Although today's rule leaves the type and frequency of these milestones to the permit writer's best professional judgment, see 40 CFR 430.24(b)(2), milestones should include intermediate pollutant load and wastewater flow reductions (for Tier II and Tier III mills) in addition to research schedules, construction schedules, mill trial schedules, or other milestones appropriate to the advanced technology and the participating mill. Interim milestones should be tailored to circumstances and process technologies at individual mills.

In order to facilitate the development of appropriate interim milestones on a case-by-case basis, EPA proposes elsewhere in today's **Federal Register** to require all mills enrolling in the incentives program to submit plans detailing the strategy the mill will follow to develop and implement the technology required to achieve the chosen incentive tier, as well as the interim numeric limitations for Tiers II and III. The plan should describe each envisioned new technology component or process modification the mill will need to achieve the Voluntary Advanced Technology BAT limits. A master schedule should be included in the plan showing the sequence of implementing the new technologies and process modifications and identifying critical path relationships within the sequence. For each individual technology or process modification, a schedule should be provided that lists the anticipated date that associated construction, installation, or process changes will be initiated, the anticipated date that those steps will be completed, and the anticipated date that the full Advanced Technology process or individual component will be fully operational. For those technologies or process modifications that are not commercially available or demonstrated on a full scale basis at the time the plan is developed, the plan should include a schedule for research (if necessary), process development, and mill trials. The schedule for research, process development, and mill trials should show major milestone dates and the anticipated date the technology or process change will be available for mill implementation. The plan also would need to include contingency plans in the event that any of the technologies or processes specified in the Milestones Plan need to be adjusted or alternative approaches developed to ensure that the ultimate tier limits are achieved by the dates in the master schedule. EPA expects the permitting authority to use the information contained in those plans, as well as its own best professional judgment, to establish enforceable interim milestones applying all statutory factors. EPA also expects permit writers to include reopener clauses in the permits to adjust these milestones including dates to reflect the

results of research (if necessary), process development, and mill trials.

Section 402(a) of the Clean Water Act authorizes permit writers to establish permit conditions and limitations on the basis of best professional judgment as necessary to achieve the objectives of the Act. Although EPA is promulgating BAT limitations under CWA sections 301 and 304, EPA is not—nor could it today—codify the particular process development, construction, and testing milestones that will lead each participating mill to achieve the ultimate Voluntary Advanced Technology performance requirements. Identifying those milestones is best left to the judgment of the permit writer, who will have access to far more mill-specific information than EPA has today.

c. ''Stage 2'' limitations. The third component of the Voluntary Advanced Technology BAT limitations consists of the ''stage 2'' limitations. See 40 CFR 430.24(b)(4)(i). These are the only standards applicable to Voluntary Advanced Technology NSPS and must be achieved upon commencing operation. See 40 CFR 430.25(c). Also included in the Voluntary Advanced Technology NSPS are standards for dioxin, furan, chloroform, 12 chlorinated phenolic compounds, BOD_5, TSS, and pH at the baseline NSPS level. See 40 CFR 430.25(c)(1). In addition, standards for pentachlorophenol and trichlorophenol, when used as biocides, are part of the Voluntary Advanced Technology NSPS. See 40 CFR 430.25(d).

These limitations and standards represent the ultimate performance requirements for each Tier. The ''stage 2'' limitations are as follows:

(1) Tier I Voluntary Advanced Technology BAT Limitations (''stage 2''). For Tier I, the ultimate performance requirement for AOX is a long-term average (LTA) of 0.26 kg/kkg, measured at the end of the pipe. 40 CFR 430.24(b)(4)(i). Under this Tier, Advanced Technology fiber lines at participating mills must also achieve reduced lignin content in unbleached pulps as measured by a kappa number of 20 for softwoods and 13 for hardwoods and reported as an annual average. *Id.* Finally, Tier I Advanced Technology fiber lines must recycle to recovery systems all filtrates up to the point at which the unbleached pulp kappa numbers are measured (e.g., brownstock into bleaching). Tier I also includes limitations for dioxin, furan, chloroform and 12 chlorinated phenolic pollutants, see 40 CFR 430.24(b)(3). Limitations on these parameters are established at the baseline BAT levels because application of Advanced Technologies does not appear on this record to justify more stringent limitations.

(2) Tier II Voluntary Advanced Technology BAT Limitations (''stage 2'') and NSPS. For Tier II, the ultimate performance requirement for AOX is an LTA of less than 0.10 kg/kkg, measured at the end of the pipe. 40 CFR 430.24(b)(4)(i) and 430.25(c)(2). In addition, Tier II Advanced Technology fiber lines must recycle to chemical recovery systems all pulping-area filtrates prior to bleaching. *Id.* Finally, Tier II Advanced Technology fiber lines must also achieve total pulping area condensate, evaporator condensate, and bleach plant wastewater flow of 10 m^3/kkg or less reported as an annual average. *Id.* Tier II mills must also meet (or, in the case of existing dischargers, must continue to meet) limitations for dioxin, furan, chloroform, and the 12 chlorinated phenolic pollutants. See 40 CFR 430.24(b)(3) and 430.25(c)(1). Application of the Tier II Technologies does not appear to justify more stringent limitations for these parameters.

(3) Tier III Voluntary Advanced Technology BAT Limitations (''stage 2'') and NSPS. For Tier III, the ultimate performance requirement for AOX is an LTA of less than 0.05 kg/kkg, measured at the end of the pipe. See 40 CFR 430.24(b)(4)(i) and 430.25(c)(2). In addition, Tier III Advanced Technology fiber lines must recycle to chemical recovery systems all pulping-area filtrates prior to bleaching. *Id.* Finally, Tier III Advanced Technology fiber lines must also achieve total pulping area condensate, evaporator condensate, and bleach plant wastewater flow of 5 m^3/kkg or less reported as an annual average. *Id.* Tier III mills must also meet (or, in the case of existing dischargers, must continue to meet) limitations for dioxin, furan, chloroform, and the 12 chlorinated phenolic pollutants. See 40 CFR 430.24(b)(3) and 430.25(c)(1). Application of the Tier III Technologies does not appear to justify more stringent limitations for these parameters.

d. Voluntary Advanced Technology BAT Limitations and NSPS for Mills Employing TCF Processes. In order to encourage mills to employ Advanced Technologies founded on TCF processes, EPA is opening today's incentives program to fiber lines that employ or commit to employ such processes. Existing dischargers that choose to employ TCF processes are subject to the ''stage 1'' limitations, interim milestones (including the baseline BAT limitations), and the ''stage 2'' limitations applicable to the selected tier. 40 CFR 430.24(b) and 430.25(c). These limitations are discussed above. However, recently gathered data from TCF mills indicate that all TCF mills will be able to achieve the AOX performance requirements at any Tier level because end-of-pipe AOX levels are being reported at below minimum level. See DCN 14488. Consequently, the AOX limitations for TCF fiber lines are expressed as ''<ML.'' See 40 CFR 430.24(b) (3) and (4) and 430.25(c)(2). In addition, unlike mills using ECF processes to achieve Tier II and III BAT limits, TCF fiber lines would not receive limitations for the presence of TCDD, TCDF, chloroform, or the 12 chlorinated phenolics if they certify as part of their permit application (with appropriate corroborating data) that the bleaching process at those fiber lines does not involve the use of chlorine-based compounds. See 40 CFR 122.21(g)(3), (13) and 40 CFR 122.22(d). Similarly, a mill making the TCF certification is not subject to the minimum monitoring frequencies otherwise applicable to AOX. See 40 CFR 430.02. (For fiber lines that converted from ECF to TCF processes, mills should submit up to six months of AOX data—at the discretion of the permit writer—in order to allow the permit writer to determine an appropriate monitoring frequency on a best professional judgment basis.) EPA has determined that limitations on dioxin, furan, chloroform and the 12 chlorinated phenolic pollutants, and minimum monitoring requirements for AOX are unnecessary for TCF processes because a mill that does not use or generate compounds containing chlorine will not generate chlorine-related pollutants as a result of its bleaching processes. EPA hopes that such substantially reduced requirements for TCF mills will encourage more mills to employ TCF bleaching processes.

6. Selection of Voluntary Advanced Technologies as Bases for BAT Limitations and NSPS

Achievement of these BAT limitations, in particular the ''stage 2'' limitations for Tiers II and III, would represent substantial progress toward the national goal of eliminating the discharge of all pollutants. The ''stage 2'' limitations include limitations on AOX that are significantly more stringent than the baseline BAT limitations for AOX, as well as Tier-specific restrictions on the lignin content of unbleached pulps, the discharge of pulping area filtrates, and the quantity of total pulping area condensate, evaporator condensate and bleach plant wastewater flow. The latter restrictions, which are unique to the

Voluntary Advanced Technology Incentives Program, call for environmental performance far in excess of the performance compelled by the baseline BAT.

EPA chose the parameters and limitations unique to the Voluntary Advanced Technology Incentives Program because they reflect the levels of performance EPA believes can be achieved over time by mills willing and able to invest the resources to develop and apply the corresponding Advanced Technology processes and practices. The Tier I technology is available today and does not impose significant non-water quality environmental impacts; it was not selected as the baseline BAT technology because it is not economically achievable for the subcategory as a whole or any segment as is discernible from the record available today. See Section VI.B.5.a(5). However, for mills willing and able to employ that technology, EPA believes that limitations based on extended delignification, complete substitution, and other processes would be economically achievable by the year 2003. EPA believes that the technology bases for Tier II, in turn, could be technically and economically achievable for mills willing to participate by the year 2008, and would not impose significant non-water quality environmental impacts. EPA bases its view on the experience of at least three U.S. mills that are moving in the direction of reduced bleach plant flow. See DCN 14488. None of these mills, however, is presently achieving the ''stage 2'' flow limits for Tier II because those limits include pulping area and evaporator condensate as well as bleach plant wastewater flow. Finally, with respect to Tier III, EPA notes that one mill in Finland today is achieving flow levels close to 5 m^3/kkg or less, although this mill's flow rates also exclude condensates. This mill is able to achieve its current level of performance without imposing significant non-water quality environmental impacts. In addition, mills choosing Tier III will have up to 16 years and considerable flexibility to develop and implement appropriate flow control strategies. (For a discussion of the timeframes associated with achieving the Voluntary Advanced Technology BAT Limitations, see Section IX.A.7.) While EPA recognizes that achievement of the ''stage 2'' limits for Tier III may call for considerable creativity and innovation by industry participants, EPA believes that such spurs to innovation are consistent with the Clean Water Act's ultimate goal of eliminating the discharge of pollutants. Finally, EPA emphasizes that participation in the Advanced Technology Incentives Program is purely voluntary. No mill in the Bleached Papergrade Kraft and Soda subcategory is required to commit to achieve the Voluntary Advanced Technology BAT limitations at any level.

The voluntary nature of the Advanced Technology Incentives Program also supports EPA's finding that the ''stage 2'' BAT limitations for the various Incentives Tiers will be economically achievable by the dates specified in the rule for the mills choosing to achieve them. See 40 CFR 430.24(b)(4)(ii). The ''stage 2'' limitations apply only to mills that designate themselves as Tier I, Tier II or Tier III Advanced Technology performers and that voluntarily accept the corresponding ''stage 2'' limits in their NPDES permits. In other words, the ''stage 2'' limitations are BAT for an Advanced Technology mill only because that mill announces, by choosing to participate in the Program and by its choice of Tier, that by the date specified in the rule for the applicable ''stage 2'' limits a technology will be both available and economically achievable for the purpose of achieving those limitations. Based on the experiences of mills that have voluntarily pursued performance levels comparable to the ''stage 2'' limitations of Tiers I and II, EPA believes that a mill choosing to pursue those objectives can do so within its economic capability. Therefore, EPA believes it is reasonable to presume that a mill would not subject itself to enforceable technology-based limits if achievement of those limits would exceed the mill's economic capability. Because the economic achievability of the ''stage 2'' limitations ultimately is evaluated according to the mill's own choices, EPA concludes that the ''stage 2'' limitations are economically achievable. In addition, while implementation of these Advanced Technologies today is beyond the economic capabilities of many mills because of the significant capital investments that can be incurred at the outset, EPA believes that a mill able to plan for these investments over time could reduce those investment costs to some extent, if only by minimizing the amount of capital the mill would need to borrow. Moreover, with additional time mills will inevitably find ways to implement these technologies that reduce costs. More importantly, it could make these environmental improvements in sequence with other business decisions related to capital investment, thus reducing the overall cost of installing the Advanced Technologies. Although on this record EPA cannot state with confidence what the cost of implementing these Advanced Technologies would be if spread over time (and hence cannot make an economic achievability finding for the subcategory as a whole or any discernible segment relating to those Advanced Technologies), EPA nevertheless believes that each mill is capable of making that judgment and assuming the corresponding economic risks. This Voluntary Advanced Technology Incentives Program thus establishes a structure by which mills willing to predict their economic fortunes over the next several years and to commit to enforceable permit limits based on that prediction can do so.

EPA has considerable discretion under CWA section 304(b)(2) to determine whether and when a particular technology or process is BAT. EPA also has broad authority to interpret CWA section 301. In *E.I. du Pont de Nemours & Co.* v. *Train,* 430 U.S. 112 (1977), the Supreme Court accorded great deference to EPA in promulgating effluent limitations guidelines as regulations under section 301, noting that ''[CWA Section] 101(d) requires us to resolve any ambiguity on this score in favor of the Administrator.'' *Id.* at 128. The Supreme Court also found that section 501(a) supports EPA's broad use of its regulatory authority to implement section 301. *Id.* at 132. EPA believes that its decision to promulgate Voluntary Advanced Technology BAT limitations is authorized by sections 301 and 304. Section 301(b)(2) in particular directs EPA to promulgate BAT limitations that, within the constraints of economic achievability, ''will result in reasonable further progress toward the national goal of eliminating the discharge of all pollutants.'' Section 301(b)(2)(A). In addition, both case law and the legislative history interpreting the BAT program make it clear that the statute is to be used to force technology, within the constraints imposed by sections 301(b)(2) and 304(b)(2). Promulgation of regulations to promote the use of Advanced Technologies and, hence, progress toward the elimination of pollutant discharges thus is within the scope of the Administrator's 501(a) authorities. *See Cleveland Electric Illuminating Co.* v. *EPA,* 603 F.2d 1, 6 (6th Cir. 1979) (''The ultimate justification for every regulation and guideline pertaining to discharges is its effectiveness in promoting the achievement of the goals of Congress in enacting the 1972 Amendments.'')

As part of its BAT analysis, EPA performed a case-study analysis to determine the potential effluent reduction benefits derived from the incentives program. Effluent reductions were calculated for a hypothetical case-study mill complying with Voluntary Advanced Technology BAT limitations at each incentive Tier. This case study is discussed in more detail at DCN 14488. The 1000 metric ton-per-day case-study mill operates a softwood and a hardwood bleach line of equal size, and uses a conventional three-stage bleach sequence with chlorine on each line. Table IX–1 presents effluent load reductions from that case-study mill, calculated for the baseline BAT (BAT Option A) as well as each incentive Tier.

TABLE IX–1.—EFFLUENT LOAD REDUCTIONS FOR CASE STUDY MILL

Pollutant	Units	Baseline BAT Technology	Tier I	Tier II	Tier III
AOX	kkg/yr	670	770	830	840
BOD5	kkg/yr	290	440	720	870
COD	kkg/yr	6,000	11,000	13,000	18,000
Color	kkg/yr	2,000	15,000	30,000	34,000
Chloroform	kg/yr	290	290	290	290
TCDD&TCDF	g/yr	4.9	4.9	5.0	5.0
12 Chlorinated Phenolics	kkg/yr	1,000	1,100	1,200	1,200

Note that for all levels, TCDD, TCDF, chloroform and the 12 chlorinated phenolics will not be detected in the final effluent. The differences between the levels are the result of technologies employed to reduce discharge flow rates under the incentive Tiers.

In selecting the technology basis for each of the Incentives Tiers, EPA also evaluated the associated non-water quality environmental impacts, changes in energy requirements, the age of facilities and equipment involved, the process used, and the engineering aspects of various types of control techniques and process changes. See DCN 14488. Nothing in EPA's analysis of these factors justified selecting different BAT technologies than those identified in section IX.a.3. EPA found that the technologies that form the basis of the Incentives Tiers provide a significant degree of water conservation, particularly at Voluntary Advanced Technology Tiers II and III. EPA also expects lower secondary sludge generation rates at Incentives Tier mills with activated sludge treatment because of reduction in BOD_5 loads associated with the Advanced Technologies. The technology basis of each of the Incentives Tiers will lead to overall decreases in energy consumption, primarily because of replacement of chlorine dioxide with oxygen-based delignification and bleaching chemicals. EPA expects a slight increase in air emissions (<2 percent) due to increased recovery of black liquor that will occur under the Incentives Tiers. However, these are offset by reductions in air pollution that derive from the reductions in overall energy consumption.

EPA considered the potential for cross-media transfer of pollutants through implementation of the Advanced Technologies that form the basis of the Incentives Tiers. EPA found no basis to conclude that cross-media transfer of pollutants would occur. See DCN 14488 and DCN 14492. However, much of the Tier II and Tier III technology bases focus on closing mill process cycles, which has not yet been fully demonstrated. As these technologies are fully developed and implemented, sufficient engineering analyses and testing should be performed to assess whether unacceptable cross media transfer of pollutants are occurring, and whether modifications need to be made to avoid any unacceptable transfers identified.

For NSPS, EPA has determined that Tier II and Tier III technologies constitute the best demonstrated control technologies for mills enrolling in those tiers. Although EPA cannot say today that either of these technology sequences is the best demonstrated control technology for new sources in the Bleached Papergrade Kraft and Soda subcategory as a whole, EPA does believe that new sources emerging within the next 16 years may characterize them as such based on their own sense of their economic and technical capabilities. Therefore, as with existing sources, EPA is promulgating this additional array of NSPS in order to provide such mills the opportunity to pursue voluntarily pollution prevention technologies—and to accept correspondingly more stringent effluent limitations—if business circumstances warrant. EPA notes that a mill subjecting itself to the Advanced Technology NSPS will be shielded from more stringent technology-based effluent limitations for ten years beginning on the date that construction is completed. See CWA section 306(d). Because these standards are entirely voluntary, their promulgation today presents no barrier to entry. In addition, EPA has determined that achievement of these standards will not result in any significant non-water quality environmental impacts or significant additional energy requirements. See DCN 14488. Nothing in EPA's analysis of the other statutory factors applicable to NSPS justified selecting different NSPS technologies.

EPA also believes it is appropriate to promulgate limitations for all three Tiers at the same time it promulgates the baseline BAT limitations. (The same rationale applies for today's Voluntary Advanced Technology NSPS.) By promulgating all three Voluntary Advanced Technology BAT Tiers today, rather than in five-year increments, EPA hopes to encourage as many mills as possible to develop and install Advanced Technologies. On this record, EPA has determined that its customary practice of promulgating a single BAT for similarly situated mills—represented here by the baseline BAT limitations—would have the unintended effect of impeding some mills' progress toward even greater environmental objectives than EPA can compel at this time. Thus, if EPA were to promulgate only baseline BAT limitations today and not establish a parallel track for mills converting to Advanced Technologies, EPA is concerned that mills might abandon their voluntary long-term strategies of superior environmental performance in favor of compulsory short-term compliance strategies focused on the baseline BAT. Instead, by promulgating Voluntary Advanced Technology BAT limitations at the same time as baseline BAT limitations, EPA allows interested mills to consider all technology options at the outset before they make their investment decisions and to design and install precisely the technologies and

processes they will need to meet their long-term Advanced Technology objectives. Therefore, EPA has decided to promulgate all of the Voluntary Advanced Technology BAT limitations today in order to provide mills with an opportunity to push their environmental performance beyond the minimum prescribed by the baseline BAT and on toward the statutory goal of zero discharge. Promulgating the various Voluntary Advanced Technology Tiers today rather than in five-year increments also provides some predictability regarding the progress expected of Advanced Technology mills over time. EPA hopes that this predictability will encourage greater participation in the program and thus lead to superior effluent quality. Finally, promulgating all three Tiers of Advanced Technology BAT Limitations today makes sense because it reflects EPA's regulatory approach for promoting successively greater environmental achievements for this industry, and because companies willing to commit to achieve the increased environmental controls will be able to avoid the uncertainties inherent in a succession of later rulemakings.

EPA has the authority to promulgate the three Tiers of Voluntary Advanced Technology BAT limitations today even though their ultimate performance requirements will not be attained until a future date. EPA has the authority under CWA section 304(b)(2) and 304(m) to revise the baseline BAT limitations for the Bleached Papergrade Kraft and Soda subcategory whenever the Administrator deems it is appropriate. Thus, EPA would be free in 5, 10 or 15 years to codify the Voluntary Advanced Technology limitations as BAT. However, by then, mills potentially interested in pursuing Advanced Technologies would already have been required to meet baseline BAT limitations, perhaps using technologies not fully compatible with more advanced processes. The costs of retrofitting, or in some cases replacing, newly installed process technologies to achieve more stringent limits might prevent EPA from finding that these technologies are economically achievable. In addition, participating mills would lose a long-term planning horizon, which is very important because of the significant capital outlays involved. As a result, EPA was concerned that failure to promulgate these Voluntary Advanced Technology BAT limitations today might compromise future pollution prevention opportunities. EPA is authorized to consider those opportunities when promulgating BAT limitations. EPA therefore believes it is appropriate to consider these barriers to pollution prevention as factors relevant to the definition of BAT limitations and the timing of their promulgation, see CWA section 304(b)(2)(B); especially since failure to promulgate a Voluntary Advanced Technology Incentives Program at this time might impede reasonable further progress toward the national goal of eliminating discharges of all pollutants. *See* CWA section 301(b)(2).

An important component of this incentives program is the element of choice. Direct discharging mills subject to Subpart B may choose whether to enroll in the program and, once enrolled, may choose the Tier, or performance level, that they will achieve. In order to codify this structure, EPA has promulgated three sets of Voluntary Advanced Technology BAT limitations for bleached papergrade kraft and soda mills and two sets of NSPS in addition to the baseline BAT and NSPS. In effect, EPA has divided Subpart B into segments based on the types of bleach plant processes mills choose to employ. EPA has considerable authority to establish segments within an industrial subcategory for the purpose of promulgating BAT limitations unique to those mills. Much like mill-specific variances based on fundamentally different factors, segments reflect EPA's authority to take into account the diversity within each industry. See *Chemical Mrfs. Ass'n* v. *NRDC,* 470 U.S. 116, 130, 105 S.Ct 1102, 1110 (1985). Thus, segmentation, like variances, is not an exception to the standard-setting process, but rather a more fine-tuned application of it. *Id.*

For BAT, EPA has essentially established four segments for the Bleached Papergrade Kraft and Soda subcategory (and, similarly, three segments for NSPS). One segment codifies the baseline BAT limitations; the other three segments codify Tiers I, II and III of the Voluntary Advanced Technology BAT Incentives Program. EPA defined the Advanced Technology segments to reflect the various types of process changes and control techniques that mills might employ to achieve environmental performance beyond the baseline BAT level. The Advanced Technology segments also reflect the cost of achieving progressively greater environmental effluent reductions. Any one of those factors is sufficient under CWA section 304(b)(2) to justify a segment for affected mills. Each mill in Subpart B must comply with the baseline BAT limitations unless it designates itself as an Advanced Technology mill, in which case it must meet the BAT limitations corresponding to the Tier—and segment—it chooses.

Although EPA has identified an array of process changes that, if employed, could distinguish one Subpart B mill from another and has based its Advanced Technology limitations on those potential changes, EPA has made the Advanced Technology segments voluntary. This is because the decision whether Advanced Technology process changes are technically feasible and economically achievable for a particular mill depends on many factors unique to that mill that EPA, on the record available today, cannot readily discern or forecast. Among the more significant factors appear to be the mill's current bleaching sequence, the physical configuration of equipment, the age of equipment (and, thus, end-of-life issues), the available capacity in chlorine dioxide generation and in the recovery boiler, and whether the mill uses hardwood or softwood. See DCN 14488. *See* also Paper Task Force, Technical Supplement White Papers, Record section 20.2.8, DCN 14794, DCN 14795, and DCN 14796.

EPA also has important policy reasons for making the Advanced Technology BAT limitations voluntary, both in terms of the decision to participate and in terms of the level of environmental performance to be achieved. As discussed in greater detail above, EPA believes that mills willing and able to employ technologies and processes superior to the ''baseline'' promulgated as BAT—and willing to guarantee that effort in the form of enforceable technology-based permit limitations—should have the opportunity to do so. By giving mills a choice to exceed baseline compliance levels, EPA implements CWA section 301(b)(2)'s direction that BAT limitations ''result in reasonable further progress toward the national goal of eliminating the discharge of all pollutants,'' to the extent consistent with EPA's findings of economic achievability, among other factors. By allowing mills to choose between baseline BAT limitations and Voluntary Advanced Technology BAT limitations at the outset, EPA also wants to encourage mills to consider all possible process configurations before investing in the baseline BAT technology. Thus, by codifying multiple expressions of BAT, EPA has established a regulatory mechanism that allows mills to choose greater environmental performance than EPA could require on this record and also authorizes permit writers to

memorialize that choice in the form of enforceable permit limits.

Although applied here for the first time to codify a Voluntary Advanced Technology Incentives Program, the notion of using segmentation to determine applicable technology-based limitations is not new. Indeed, effluent limitations guidelines and standards routinely base applicability of technology-based limitations on a discharger's particular process or treatment technologies. For example, elsewhere in today's rule EPA is segmenting the Papergrade Sulfite subcategory to reflect, among other things, the type of product the mill produces. Thus, a papergrade sulfite mill choosing to produce specialty products subjects itself to a different set of limitations than other mills in its subcategory simply by making that business decision. EPA also used segmentation to account for different treatment configurations when it promulgated BAT for the organic chemicals, plastics and synthetic fibers category. *See* 40 CFR 414.91, 414.101; 58 FR 36872, 36881–85 (July 9, 1993). In that rule, EPA established two sets of BAT limitations for a subcategory of plants, one set applicable to plants using end-of-pipe biological treatment and the other set applicable to plants using some other treatment technology, including in-plant waste management practices. In this rule, the Advanced Technology segments are intended to anticipate a mill's business decision to change its cooking, washing, bleaching, wastewater recycle, and recovery processes to achieve greater pollutant reductions than EPA can require as baseline BAT. Indeed, by establishing these segments, EPA hopes to encourage many mills to choose Advanced Technologies, especially those mills that would need to change their bleaching and washing processes in any event to comply with the baseline BAT.

EPA also notes that it could have accomplished the same result for existing sources on a case-by-case basis through the Clean Water Act's variance processes. *See Chemical Mrfs. Ass'n* v. *NRDC,* 470 U.S. at 130, 105 S.Ct at 1110. Advanced Technology mills could have sought fundamentally different factors variances under CWA section 301(n); for non-conventional pollutants, these mills could have pursued a variance under section 301(c). Under either section, mills could have obtained BAT effluent limitations that are more or less stringent than the baseline BAT. *See Chemical Mrfs. Ass'n* v. *NRDC,* 470 U.S. at 116, 105 S.Ct at 1105–06 (FDF variances); *EPA* v. *National Crushed Stone Ass'n,* 449 U.S. 64, 79 n.18 (1980) (§ 301(c) variances). However, EPA rejected implementing the Voluntary Advanced Technology Incentives Program through variances for several reasons. First, the Clean Water Act and its legislative history indicate a clear Congressional preference for the use of subcategories, rather than variances, to address discernible differences among regulated entities. By requiring applications for FDF variances to be based on information submitted during the rulemaking process (unless the applicant lacked a reasonable opportunity to make such submission), *see* section 301(n)(1)(B), Congress stressed the need for companies to participate fully in the guideline development process to assure that adequate information is available to EPA to develop appropriate subcategories. *See* 131 Cong. Rec. S 8013 (June 12, 1985) (Sen. Bentsen); *see also* 133 Cong. Rec. H 131, 136–37 (Jan. 7, 1987) (Rep. Howard) (provision assures that effluent guidelines ''are as comprehensive as possible''); 133 Cong. Rec. S 733, 739 (Jan. 14, 1987) (Sen. Mitchell) (EPA should accommodate fundamental differences among facilities through the establishment of subcategories). In this rulemaking, many commenters supplied vast amounts of information concerning the special circumstances of facilities aspiring to become minimum impact mills. As Congress intended, EPA established the three Voluntary Advanced Technology segments in response to that information rather than deferring consideration of the issue to the post-rulemaking variance process.

Second, as a matter of policy, EPA believes it is reasonable to employ its subcategorization, rather than its variance, authority to implement the Voluntary Advanced Technology Incentives Program. By establishing the Voluntary Advanced Technology BAT limitations by rulemaking at the same time it codifies the baseline BAT limitations, EPA intends to provide all direct discharging mills within Subpart B the immediate opportunity to push beyond base level environmental performance and also to provide with certainty regarding the stringency and timing of the limits they would be expected to meet. In this way, EPA hopes to encourage many mills to participate in the program. Use of case-by-case variance procedures, in contrast, would introduce delay and uncertainty into the process, which EPA believes would discourage industry participation.

In summary, EPA has discretion in determining whether to account for industry characteristics through subcategorization or through the variance process. Like variances, the Voluntary Advanced Technology segments apply only to mills that on their own initiative seek different BAT limitations. Unlike variances, however, the subcategorization scheme promulgated by EPA assures consistent and timely implementation of the Voluntary Advanced Technology Incentives Program, which EPA believes is critical to its success. Therefore, for the reasons explained, EPA's decision to subcategorize Subpart B was rational and within its discretion.

7. Time Frames for Achieving Voluntary Advanced Technology BAT Limitations

In order to promote the pollution prevention objectives of the Voluntary Advanced Technology Incentives Program, EPA has determined that existing mills choosing to participate in that program should receive a reasonable amount of time to achieve the Advanced Tier performance levels they select. See 40 CFR 430.24(b)(4)(ii). (These performance levels are codified in this rule as ''stage 2'' BAT limitations.) The extended timeframes discussed below are not available for new sources enrolled in the Advanced Technology Incentives Program because the Clean Water Act requires new sources to comply with applicable NSPS upon commencing operation. CWA Section 306(e). However, new sources interested in participating in the Voluntary Advanced Technology Incentives Program after commencing operation may nevertheless do so, for example, by achieving the baseline NSPS requirements at the time discharges commence and later installing additional technologies necessary to achieve the more stringent AOX and flow requirements of Tiers II or III. Once limitations equivalent to the selected advanced Tier performance levels are placed in the mill's permit and the mill achieves those limits, it is eligible to receive the regulatory and enforcement relief described as incentives in Section IX.B. below.

EPA has determined that reasonable dates by which existing sources can achieve Advanced Technology performance requirements are *[April 15, 2004]* for Tier I, April 15, 2009 for Tier II, and April 15, 2014 for Tier III. See 40 CFR 430.24(b)(4)(ii). As discussed in more detail below, these dates assume an initial start-up year during which mills subject to Subpart B would decide whether to enroll in the Voluntary Advanced Technology Incentives Program and develop a plan for complying with the ultimate incentives

BAT limitations. The remaining additional time, calculated as 5 years for Tier I, 10 years for Tier II, and 15 years for Tier III, corresponds to the time EPA believes a mill would need in order to arrange its financing and to develop, install, test, and implement the chosen Advanced Technologies at full scale to comply with the ultimate tier limits.

EPA regards five years as a reasonable time frame to achieve the Voluntary Advanced Technology BAT limitations corresponding to Tier I (including the bleach plant BAT effluent limitations). When spread over five years, the capital costs of those technologies become more manageable (although they are still significantly higher than the capital costs associated with the baseline BAT). In addition, the five year period gives mills increased flexibility to schedule the significant capital investment within the mill's normal capital investment cycle, i.e., to purchase and install the necessary equipment when capital is available. Therefore, EPA believes the five year period will enable mills to participate in the Voluntary Advanced Technology Incentives Program that otherwise might not have the financial resources to make the necessary capital investment.

EPA regards ten years as a reasonable timeframe to achieve the Voluntary Advanced Technology BAT limitations corresponding to Tier II because the development and implementation of technologies to reduce bleach plant flow to 10 m^3/kkg pose technical and economic difficulties that EPA believes would take mills up to ten years to resolve. (Once flow levels are reduced, EPA expects that mills also will be able to achieve the Tier II AOX limitations.) Recycling a substantial portion of pulping and evaporator condensates and bleach plant filtrates, with the attendant complexities of total mill water, chemical, and energy balances, requires considerable time before it can be implemented successfully at mill-scale. For example, when bleach plant filtrates are recycled, problems with scale and corrosion can take many months to over a year to develop and be observed. Once identified, fully correcting such problems can take significant additional time because of the time lag between action and observed effect in nearly closed systems. In addition to problems with scale and corrosion, mills pursuing Tier II performance levels may have to solve challenges associated with reusing condensates, such as for bleached pulp washing. There are a few mills currently doing this, but not broad operating experience. Consequently, EPA expects that Tier II mills will need to invest considerable time and effort to research and develop solutions to those technical problems. In addition to these technical challenges, significant capital costs may be involved in achieving Tier II limits, notably as a result of upgrading full pulping and bleaching lines and associated evaporator equipment. Providing an extended timeframe that allows a mill to make such capital expenditures on a schedule consistent with its planned investment cycle can make such large investments economically achievable. For example, one U.S. mill currently approaching the Tier II flow and AOX levels installed many of the relevant technologies in stages over what probably will be a ten-year period, with the last three years used for testing and fine-tuning its reduced flow processes. Yet even this mill still needs to address the technical challenges of further reducing condensate discharge flow before it is fully able to achieve the Tier II BAT limits. That mill needed ten years to plan its multi-hundred million dollar renovation and pollution prevention investment, to arrange appropriate financing, to install supporting technologies at appropriate intervals and to research, develop, test, and refine its innovative flow-reducing processes. EPA believes that this mill's experience is representative of what other Tier II mills may encounter as they work to achieve the Tier II limitations. See the Voluntary Advanced Technology Incentives Program Technical Support Document (DCN 14488) for additional examples of why the ten-year timeframe is appropriate. Based on these experiences, EPA believes that the package of technologies underlying the Tier II Voluntary Advanced Technology BAT limitations will not be technically and economically achievable for mills aspiring to those performance levels until April 15, 2009. However, EPA believes that mills will be able to achieve the baseline BAT limitations by April 15, 2004, and enforceable interim milestones reflecting intermediate levels of flow reduction (determined on a case-by-case basis) in a period shorter than eleven years.

EPA regards 15 years as a reasonable timeframe to achieve the Voluntary Advanced Technology BAT Limitations corresponding to Tier III. As for Tier II, flow reduction again is the most difficult and time-consuming task. However, because reducing flow for pulping and evaporator condensates and bleach plant filtrates to 5 m^3/kkg or even lower approaches a closed mill configuration, even more technically difficult and time-consuming tasks must be successfully completed, necessitating five additional years beyond the Tier II timeframe. For example, mills would probably need to install ''kidney'' technologies to remove metals and chlorides in order to control system scaling and corrosion problems while maintaining product quality and minimizing cross-media impacts. Successful completion of these tasks at individual mills may involve research, extensive process development, and mill trials. The types of corrosion and scaling problems EPA anticipates could take over a year of nearly closed-loop operation to identify and several more years of experimental modifications to mill operations to solve. Extensive time is required for such modifications because of the time lag in nearly closed-mill systems from changing process conditions and observing the steady state impact on hydraulic systems, liquor systems, and associated mill equipment. Mills may also need to embark on process development and mill trials to achieve treated condensate quality that is sufficient to extensively reuse condensates, as well as to reestablish complex mill water and energy balances. For these reasons, EPA believes that 15 years is a reasonable amount of time for a Tier III mill to perfect existing technologies or invent or develop new ones as necessary to achieve the Tier III performance levels. However, EPA believes that all mills will be able to achieve the baseline BAT limitations by *[April 15, 2004]*, and enforceable interim milestones reflecting intermediate levels of flow reduction (determined on a case-by-case basis) in a period shorter than 15 years.

In short, EPA believes that the additional 5, 10 and 15 year periods provided by the rule are necessary to foster investment, research, development, and mill trials of Advanced Technologies envisioned by the specified performance levels. EPA further believes that, by the dates specified in the rule, technologies necessary to achieve those performance levels will indeed be available. See DCN 14488.

EPA has concluded that it is reasonable to measure the extended time periods from the publication date of the Cluster Rules rather than from the date a participating mill's NPDES permit is issued, with the addition of one year at the beginning to afford mills a meaningful opportunity to consider participating in the Voluntary Advanced Technology Incentives Program. EPA recognizes that the decision whether to commit to the Advanced Technology goals cannot be undertaken lightly. This is especially so in view of the significant

capital costs involved and in view of possible uncertainties regarding the availability of appropriate cost-effective technologies and a mill's ability to maintain product quality. Accordingly, EPA expects the decision would need to be made at the corporate rather than the facility level, which would probably require corporate-wide consideration of the firm's financial health, its environmental objectives and future marketing strategies, and its overall long-term plans. Because EPA believes that many firms in Subpart B have been pondering these strategic questions since publication of the proposed rule in December 1993 and the notice regarding a possible incentives program in July 1996, EPA has concluded that one year is sufficient to allow firms to make a decision whether to participate in the Voluntary Advanced Technology Incentives Program. If a mill's permit expires and is reissued before April 15, 1999, the permitting authority should incorporate Voluntary Advanced Technology BAT Limitations into that permit at the mill's request. If the mill has not yet decided whether to participate in the Voluntary Advanced Technology Incentives Program, the permit writer should incorporate BAT limitations based on the BAT baseline and should include a reopener clause so that the permit can be modified as necessary to reflect the mill's decision to participate in the incentives program. In order to afford that mill a full year to decide whether to enroll in the incentives program, EPA believes it would be appropriate for the permitting authority to issue a compliance order expiring April 15, 1999 so that the mill would not be required to comply with the baseline BAT limitations until after the election date has passed.

Some commenters suggested that EPA measure the Advanced Technology time periods from the date the first permit reflecting Voluntary Advanced Technology BAT limitations is issued. EPA rejected that approach and instead is measuring the time periods from the publication date of this rule (plus one year) for the following reasons. First, these timeframes reflect EPA's conclusions regarding the amount of time that mills would need in order to achieve the various Voluntary Advanced Technology Tier performance levels, once they have committed to those goals. As discussed in more detail above, EPA based these conclusions on record information concerning the availability of technologies and capital, among other factors. These factors have nothing to do with the permitting cycle. Second, as a matter of policy, EPA wants to promote implementation of advanced technologies as soon as possible; if EPA were to measure the Advanced Technology time periods from the date of permit re-issuance, achievement of the ultimate Tier I performance requirements and the interim baseline BAT limitations for Tiers II and III, for example, could be deferred at some mills by as much as ten years from the date of promulgation. Third, EPA was concerned that tying the Advanced Technology time periods to highly variable permit issuance dates would mean that mills with later permits would realize a competitive advantage over similarly situated mills that, merely because of their particular permit cycle, would need to achieve the Voluntary Advanced Technology BAT limitations sooner. Such inequities—whether perceived or real—could discourage some mills from participating in the Voluntary Advanced Technology Incentives Program. Finally, mills in the Bleached Papergrade Kraft and Soda subcategory have been on notice since at least 1993 that EPA was considering basing some portion of its Cluster Rules on extended delignification technologies. (In its 1993 proposal, EPA proposed to base BAT limitations on a process that included oxygen delignification and 100 percent substitution of chlorine dioxide for elemental chlorine.) In some cases, that proposal has already influenced investment decisions at some mills.

EPA acknowledges that a mill choosing not to participate in the Voluntary Advanced Technology Incentives Program could seek a compliance schedule in an enforcement order that, depending on the date its permit was reissued, could allow that mill to achieve BAT limits (including a less stringent AOX limit) at a later date than Tier I Advanced Technology mills would be required to achieve a more stringent AOX limit *and* reduced kappa numbers and pulping area filtrate recycling. While EPA agrees with comments characterizing this as unfair to those facilities making the significant commitment to install Advanced Technologies, EPA believes that the likelihood of such inequities is small for the following reasons. First, EPA has determined that this is likely to happen in comparatively few cases. More than 80 percent of the permits issued to mills in the Bleached Papergrade Kraft and Soda subcategory will expire before 2000. See Record section 21.8.1, DCN 14652. Consequently, EPA believes that most Advanced Technology mills will receive more time to achieve Tier I limits than other mills would receive to achieve baseline BAT limits, even with an enforcement compliance schedule. Second, when EPA is the permitting authority, EPA will exercise its enforcement discretion to refrain from issuing enforcement compliance schedules after April 15, 1999 to mills not participating in the Voluntary Advanced Technology Incentives Program. This means that a mill not participating in the Voluntary Advanced Technology Incentives Program would be expected to comply with its baseline BAT limits by the date its permit containing those limits is issued, or by *[April 15, 1999]*, whichever is later. EPA will also publish guidance urging State enforcement authorities to do the same. By limiting the discretionary enforcement-related compliance schedules available to baseline BAT mills, EPA hopes that the additional time periods specified for Advanced Technology mills will become a more meaningful incentive and perhaps may persuade some mills to participate in the incentives program rather than comply immediately with the baseline BAT limitations.

8. Legal Authority to Promulgate a Package of Progressively More Stringent Voluntary Advanced Technology BAT Limitations

As described in more detail above, the Advanced Technology BAT guidelines for each Tier consists of a range of successively more stringent limitations and permit conditions that represent a mill's progress toward the Tier's ultimate Advanced Technology performance requirements. Based on its analysis of today's advanced and, in some cases, innovative technologies and its judgment regarding the historically rapid advance of pollution prevention processes in this industry, EPA has determined that those performance requirements are achievable, as a technical matter, by the dates specified in each Tier, and that none of the other statutory factors in CWA Section 304(b)(2)(B) justify selecting different technology bases for Advanced Technology BAT. EPA has also determined that those Advanced Technology performance requirements are within the economic capability of mills choosing today to meet them and hence are economically achievable for those mills. EPA bases that determination primarily on two factors. First, no mill is compelled to enroll in the Voluntary Advanced Technology Incentives Program; accordingly, EPA assumes that mills that choose to enroll—and voluntarily subject themselves to a progression of

successively more stringent, enforceable permit limits—do so with the knowledge that they have the economic as well as technical ability to meet those limits. Second, the experience of other mills that voluntarily undertook major pollution prevention projects informs EPA that the ambitious performance requirements are indeed achievable for participating mills if the incremental improvements are staggered over time.

This incremental approach is authorized by CWA section 301(b)(2)(A), which expressly requires BAT to result in reasonable further progress toward the national goal of eliminating pollutant discharges. EPA believes that each of the steps comprising the three tiers of Voluntary Advanced Technology BAT Limitations moves participating mills toward that national goal. Once a mill enrolls in the Voluntary Advanced Technology Incentives Program, it accepts and must begin immediately to implement a BAT package consisting of successively more stringent permit limits and conditions. Although environmental improvements are realized only incrementally, the mill is subject to the total set of limits—including the ultimate performance requirements—as soon as its Advanced Technology permit is written based on the first increment of that BAT package. Thus, the mill is continuously subject to and must comply immediately with the Advanced Technology BAT package as it progressively unfolds, including each interim BAT limitation or permit condition representing that progress.

EPA's promulgation of BAT as a package of progressively more stringent limitations and conditions is also consistent with the use of BAT as a ''beacon to show what is possible.'' *Kennecott* v. *EPA*, 780 F.2d 445, 448 (4th Cir. 1985). Thus, while the compulsory BAT in this rule functions as the ''base level'' for the subcategory as a whole, *see E.I. du Pont de Nemours & Co.* v. *Train*, 430 U.S. 112, 129 (1977), EPA expects the Voluntary Advanced Technology BAT limitations to drive technologies and mills beyond that base level toward achievement of the goals of the Clean Water Act. By holding out the Advanced Technologies as beacons of progress, EPA believes that today's rule will encourage more mills to strive toward EPA's pollution prevention and reduced flow objectives than might otherwise do so if EPA promulgated nothing more than a ''base level'' BAT. Moreover, by codifying progressively more stringent limitations in today's Advanced Technology BAT package, EPA promotes a form of technological progress that is consistent with Congressional intent that BAT should aspire to ''increasingly higher levels of control.'' *See, e.g.*, Statement of Sen. Muskie (Oct. 4, 1972), *reprinted in* A Legislative History of the Water Pollution Control Act Amendments of 1972 (''1972 Leg. Hist.''), at 170. It is also consistent with the overall goals of the Act. *See* CWA Section 101(a). Agencies have considerable discretion to interpret their statutes to promote Congressional objectives. '' '[T]he breadth of agency discretion is, if anything, at zenith when the action * * * relates primarily to * * * the fashioning of policies, remedies and sanctions, including enforcement and voluntary compliance programs[,] in order to arrive at maximum effectuation of Congressional objectives.' '' *U.S. Steelworkers of America* v. *Marshall*, 647 F.2d 1189, 1230–31 n.64 (D.C. Cir. 1980) (upholding OSHA rule staggering lead requirements over 10 years) (quoting *Niagara Mohawk Power Corp.* v. *FPC*, 379 F.2d 153, 159 (D.C. Cir. 1967)), *cert. denied*, 453 U.S. 9113 (1981). In this case, the codification of progressively more stringent BAT limitations advances not only the general goal of the Clean Water Act, but also the explicit goal of the BAT program. *See Chevron, U.S.A., Inc.* v. *NRDC*, 467 U.S. 837, 843–44 (1984).

Moving toward the elimination of pollutant discharges in stages is also consistent with overarching structure of the effluent limitations guidelines program. Congress originally envisioned that the sequence of attaining BPT limits in 1977 and BAT limits in 1983 would result in ''levels of control which approach and achieve the elimination of the discharge of pollutants.'' Statement of Sen. Muskie (Oct. 4, 1972), *reprinted in* 1972 Legislative History, at 170. This two-step approach produced dramatic improvements in water quality, but did not achieve the elimination of pollutant discharges. Therefore, EPA periodically revisits and revises its effluent limitations guidelines with the intention each time of making further progress toward the national goal. (This is the sixth effluent limitations guideline promulgated for the pulp and paper industry, and the fourth applicable to bleached papergrade kraft and soda mills.) Achieving these incremental improvements through successive rulemakings carries a substantial cost, however. The effluent guideline rulemaking process is highly complex, in large part because of the massive record compiled to inform the Agency's decisions and because of the substantial costs associated with achieving each additional increment of environmental improvement. By promulgating these Voluntary Advanced Technology BAT limitations today as a package of incremental environmental improvements, EPA hopes to achieve the goals that Congress envisioned for the BAT program at considerably less cost: one rulemaking that looks both at the present and well into the future. Mills willing to surpass today's compulsory BAT requirements have a framework to anticipate what could be tomorrow's subcategory-wide BAT and to make today's environmental, financial and engineering judgments accordingly. Thus, the three-tiered incentives program itself represents reasonable further progress toward the goal of eliminating pollutant discharges. At the same time, within each Tier, mills must make incremental improvements that also represent reasonable further progress toward that national goal. In short, each BAT increment, whether in the form of the Tiers themselves or the progressively more stringent limitations comprising them, gives contemporary meaning to the staging process originally envisioned by Congress as the means to achieve the goal of eliminating discharge of pollutants to the Nation's waters.

Finally, like other agencies, EPA has inherent authority to phase in regulatory requirements in appropriate cases. EPA has employed this authority in other contexts. For example, EPA recently phased in, over two years, TSCA rules pertaining to lead-based paint activities. *See* 40 CFR 746.239 and 61 FR 45788, 45803 (Aug. 29, 1996). Similarly, the Occupational Safety and Health Administration phased in, over 10 years, a series of progressively more stringent lead-related controls. See 29 CFR 1910.1025 (1979 ed.). Indeed, in upholding that rule, the U.S. Court of Appeals for the D.C. Circuit noted that ''the extremely remote deadline at which the [sources] are to meet the final [permissible exposure limits] is perhaps the single most important factor supporting the feasibility of the standard.'' *United Steelworkers of America* v. *Marshall*, 647 F.2d at 1278.

EPA is aware that CWA sections 301(b)(2)(C) & (D) require BAT limits to be achieved ''in no case later than three years after the date such limits are promulgated under section 304(b), and in no case later than March 31, 1989.'' (Section 301(b)(2)(F), which refers to BAT limitations for nonconventional pollutants, also contains the March 31, 1989 date, but uses as its starting point the date the limitations are ''established.'') This language does not speak to the precise question EPA confronts here: whether EPA can

promulgate Voluntary Advanced Technology BAT limitations that are phased in over time, so that a direct discharger at all times is subject to and must comply immediately with the particular BAT limitations applicable to them at any given point in time. Section 301(b)(2) provides no clear direction. EPA therefore is charged with making a reasonable interpretation of the statute to fill the gap. *See Chevron, U.S.A., Inc.* v. *NRDC,* 467 U.S. at 843–44. EPA believes that subjecting mills who voluntarily enroll in the Voluntary Advance Technology Incentives Program to progressively more stringent BAT limitations over time best serves Congress' intent of pushing mills to achieve reasonable further progress toward eliminating all pollutant discharges. It also ensures that mills achieve these superior performance requirements at a pace that makes technical and economic sense. Finally, by phasing in these highly stringent—but elected—controls, EPA hopes to encourage more mills to surpass the BAT baseline, with the result that the environment realizes a far greater improvement than EPA could expect to see without this phased approach. For these reasons, EPA believes it is entitled to deference in its decision to promulgate Voluntary Advanced Technology BAT limits in this manner.

Several commenters supported the idea of phasing in compliance with BAT limitations for the purpose of minimizing short-term economic impacts on mills, but urged EPA to adopt this approach to set baseline BAT limits based on the model Tier I Advanced Technology (i.e., BAT Option B). In other words, these commenters argued that more stringent baseline BAT limits based on the Tier I technology would be economically achievable for the entire subcategory because affected mills would have five years to achieve full compliance. As noted above, EPA agrees that The Advanced Technologies that are not economically achievable at present can become economically achievable for individual mills that voluntarily participate as time passes. Indeed, Congress recognized as much in requiring EPA to review its effluent guidelines and to revise them as appropriate. See CWA section 304(b). However, EPA disagrees that it currently has sufficient basis on the record available today to compel all mills in the Bleached Papergrade Kraft and Soda subcategory to meet the more stringent limits five years from now. In this rulemaking, the economic achievability of those more stringent (Tier I) limits is determined by the voluntary investment decisions of the affected mills; because of the voluntary nature of the Advanced Technology Incentives Program, it is the mills, not EPA, that determine that particular Advanced Technologies are available and economically achievable for them within the time frames provided in this program. In order for EPA to impose Advanced Technology limits on the entire subcategory as the commenter suggests, EPA would need to find adequate support in the rulemaking record today that compulsory BAT limits will be economically achievable for their entire subcategory five years from now. EPA cannot make that determination based on the information available today. At best, EPA could only speculate whether some or all of the mills projected to sustain the most severe economic impacts if BAT Option B is selected would be able to avoid those impacts if compliance with that BAT is deferred. EPA does not believe that this type of speculation is a sufficient basis for compelling compliance with BAT limits that are not economically achievable today for the subcategory as a whole. Moreover, when EPA estimated the effects of deferring compliance, subcategory-wide, for five years in response to these comments, EPA concluded that the projected impacts were such that, even then, BAT Option B would not be economically achievable for the subcategory as a whole. See Section VI.B.5.a(5). For these reasons, EPA concludes that it does not have a sufficient record basis today to make Tier I (or BAT Option B) limitations the compulsory baseline BAT even if such limits would not be effective until 2002. See DCN 14392, and CBI documents DCN 14390 and DCN 14391.

EPA could have accomplished the same results in this rulemaking simply by deferring the effective dates of the ultimate Advanced Technology performance objectives until the dates specified in the rule for achievement of the ''stage 2'' limitations. EPA has the legal authority to defer the effective dates of the ''stage 2'' portion of the Advanced Technology BAT limitations in this manner. Subject to the minimum delays imposed by the APA, 5 U.S.C. § 553(d), and the Small Business Regulatory Enforcement Fairness Act (SBREFA), 5 U.S.C. § 801, EPA has inherent authority to determine the effective date of a rule and to defer the effective date in appropriate cases. *See ASG Industries, Inc.* v. *Consumer Products Safety Comm'n,* 593 F.2d 1323, 1335 (D.C. Cir. 1979). Nothing in the Clean Water Act limits this authority with respect to BAT effluent limitations guidelines. In contrast to section 306(b)(1)(B), where Congress explicitly stated that new source performance standards, ''or revisions thereof, shall become effective upon promulgation,'' the CWA is silent regarding the effective date of BAT effluent limitations guidelines. Having failed to prescribe when BAT guidelines become effective, Congress therefore has delegated to the Agency the authority to choose the appropriate effective date of the BAT effluent guideline limitations it promulgates, so long as the Agency's choice is consistent with the goals and purposes of the Act. *See Chevron, U.S.A., Inc.* v. *NRDC,* 467 U.S. at 843–44, 861. Under this approach, the ''stage 1'' limitations would be effective immediately, and the ''stage 2'' limitations would become effective by the dates specified in the regulation.

B. Incentives Available After Achievement of Advanced Technology BAT Limitations and NSPS

1. Greater Certainty Regarding Permit Limits and Requirements

Industry stakeholders have suggested to EPA that mills could be encouraged to implement advanced technologies if they had a reasonable assurance that all limitations and conditions in their permits would remain constant over a specified period of time, once compliance with the Advanced Technology limits and standards is achieved.

Under this incentive, EPA will issue guidance to states regarding the reissuance of NPDES permits held by mills that achieve all of their Advanced Technology BAT limitations or NSPS. (EPA notes that new sources that accept permit limitations based on, and commence operation in compliance with, Tier II or Tier III NSPS automatically possess a shield against more stringent standards of performance for ten years from the completion of construction.)

In its forthcoming guidance, EPA will address the timing of reissuing Advanced Technology NPDES permits and the limitations those reissued permits should contain. Regarding the reissuance of Advanced Technology NPDES permits, EPA believes that permitting authorities could reasonably conclude that an Advanced Technology NPDES permit held by a mill meeting all of its Tier limits is a low priority for permit reissuance, if there is no new water quality- or facility-related data or information that would justify new or different limits. Under these circumstances, EPA believes it would be reasonable for a permitting authority to

conclude that that permit is a lower priority for reissuance because the mill is voluntarily achieving reductions greater than otherwise required by the baseline BAT and hence presents a lower risk to water quality than other mills.

In its guidance, however, EPA will emphasize that an Advanced Technology NPDES permit should be administratively extended only if the permitting authority had provided the public with notice (the last time the permit was reissued) that it might choose to extend the permit administratively when it expires. Thus, EPA expects the permitting authority to notify the public as part of the preceding permitting process of the circumstances under which it would regard the Advanced Technology NPDES permit as a low priority for reissuance in the next permitting cycle. For example, EPA expects the permitting authority to inform the public that the permit probably would be administratively extended if the permittee has achieved all of its Advanced Technology limitations, if it has filed a timely permit application, and if the permitting authority possesses no new water quality or facility-related data that would justify new or different permit conditions and limits. In addition, EPA expects that the permit eligible for an administrative extension would contain BMPs and any water quality-based effluent limits necessary to achieve applicable water quality standards. Thus, EPA would not expect any adverse effect on the environment during the period the permit is administratively extended, in the absence of specific information indicating that more stringent water quality effluent limits need to be imposed.

The forthcoming guidance will also address the types of limitations an Advanced Technology NPDES permit should contain when it is reissued after achievement of the Tier limitations. As a threshold matter, the permitting authority will need to determine if there is a need for new or revised water quality-based effluent limitations. If there is none, EPA encourages permitting authorities to promptly reissue the NPDES permit with the existing water quality-based effluent limitations, if any, and the appropriate limitations found in 40 CFR Part 430. In some cases, the permitting authority may receive new facility- or watershed-specific information indicating that load reductions and, consequently, more stringent effluent limits on a pollutant in the mill's wastewater are necessary to achieve applicable water quality standards for that pollutant. Under these circumstances, EPA would urge states to develop priorities for allocating the necessary load reductions in a way that gives preference to Advanced Technology mills over all other Subpart B mills, particularly where Advanced Technology mills contribute a small portion of the total pollutant loads to the stream. Moreover, where more than one Advanced Technology mill discharges in a watershed, these priorities would further give preference first to Tier III mills, then to Tier II, and finally to Tier I mills.

2. Reduced Effluent Monitoring

EPA believes that reduced monitoring provisions are appropriate for ECF and TCF mills participating in the Voluntary Advanced Technology Incentives Program and is including them in the today's regulation for mills that achieve Voluntary Advanced Technology BAT Limitations or NSPS, as appropriate. See 40 CFR 430.02(c), (d) and (e). In EPA's view, consistent and successful implementation of the Advanced Technologies through ECF or TCF processes will make it increasingly less likely that the pollutants controlled by the baseline BAT will be present in the wastewater from Advanced Technology fiber lines in levels of concern. Because of these reductions and because monitoring for these pollutants tends to be costly, EPA believes it is reasonable to allow mills achieving the Voluntary Advanced Technology BAT limitations or NSPS through ECF or TCF processes to monitor less frequently for those pollutant parameters over time after establishing a reliable baseline of consistent achievement of those Advanced Technology BAT limitations or NSPS. See 40 CFR 430.02(c)–(e). To qualify for a monitoring incentive, the mill must certify that the fiber line is TCF or Advanced ECF either as part of their permit application or as part of a report of progress on compliance with milestones established to achieve their ultimate Tier limits. 40 CFR 430.02(c).

No monitoring incentive is available for kappa number or flow because no minimum monitoring frequencies are being established by this regulation. EPA encourages permitting authorities to consider factors such as the reliability of the Advanced Technology to consistently achieve or exceed the applicable limitations and performance variability in establishing monitoring frequencies for kappa number and flow on a best professional judgment basis.

The monitoring incentive for AOX applies only when the entire mill is ECF or TCF. See 40 CFR 430.02(c) and (d). Since compliance with AOX most likely will be determined at the end of the pipe, the monitoring requirement would be governed by the fiber line for which most frequent monitoring is required.

EPA retains the authority to request or obtain specific information that may be needed to determine compliance with the requirements of this rule. Because monitoring relief is specified to be available by the date compliance is required, even if the limits have not been achieved, EPA anticipates that permitting authorities will exercise their Section 308 authority to extend more frequent monitoring for mills that do not achieve compliance with their limitations.

EPA relies on section 308(a) of the Clean Water Act for authority to promulgate this incentive. The reduced monitoring for this effluent limitations guideline incentive program is being incorporated in the *Code of Federal Regulations*, and is summarized as follows:

a. For TCF fiber lines under Tiers I, II, and III, no monitoring incentive is available because no existing TCF fiber line is subject to minimum monitoring frequencies established by this rule. See 40 CFR 430.02(a). EPA anticipates that permitting authorities will consider the monitoring for AOX being imposed on mills in comparable Tiers, and the additional assurance of compliance that TCF process technologies afford relative to AOX, in establishing monitoring frequencies on a best professional judgment basis. For mills that use TCF processes part of the time and ECF processes for the remainder, EPA would apply the reduced monitoring incentive applicable to an ECF process. See 40 CFR 430.02(c), (d) and (e).

b. For any fiber line enrolled under Tier I, II, or III for which the mill certifies in its NPDES permit application or other communication to the permitting authority that it employs exclusively Advanced ECF technologies (i.e., extended delignification or other technologies that achieve at least the Tier I performance levels specified in Section 430.24(b)(4)(i)), the minimum monitoring requirements for dioxin, furan, chloroform and the 12 chlorinated phenolic pollutants will be suspended after one year of monitoring following achievement of those limitations and standards. See 40 CFR 430.02(c). (These limitations and standards must be achieved no later than April 15, 2004. See 40 CFR 430.24(b)(3).) For AOX, a certifying Advanced ECF mill also would be permitted to perform weekly instead of daily monitoring for one year after achievement of the ultimate Tier BAT limit or NSPS for that pollutant. See 40

CFR 430.02(d). Monitoring for AOX once per month would be permitted for Tier I ECF mills for four years beyond the completion of that one year period. See 40 CFR 430.02(e). Tier II ECF mills would be permitted to monitor for AOX once per quarter for four years beyond the completion of that one year period, and Tier III ECF mills would be permitted to monitor for AOX once per year for four years beyond the completion of that one year period. *Id.*

3. Reduced Inspections

EPA will issue guidance to EPA Regional Offices indicating that fiber lines enrolled in the Voluntary Advanced Technology Incentives Program and achieving Voluntary Advanced Technology BAT limitations or NSPS should be a lower priority than other NPDES facilities for routine inspections under the CWA. Under this incentive, the guidance would recommend that fiber lines achieving Tier I limits receive routine EPA inspections not more than once every two years; fiber lines achieving Tier II limits receive routine EPA inspections not more than twice every five years; and fiber lines achieving Tier III limits receive routine EPA inspections not more than once every five years. This incentive reflects EPA's view that mills installing and operating Advanced Technologies at levels to meet the appropriate tier effluent limitations and standards are likely to be complying with the other permit requirements applicable to that fiber line. Furthermore, the substantial reductions in pollutants and wastewater volumes discharged, particularly by mills achieving Tier II and Tier III limitations and standards, will have commensurately reduced environmental impacts. EPA already has redirected Federal NPDES inspections away from annual inspections of all major dischargers to focus on high risk facilities in priority watersheds. Targeted efforts in these priority watersheds focus on such factors as facility compliance status and rates, location and affected population, citizen complaints, etc. Nonetheless, under this incentive, EPA reserves the authority to conduct multi-media inspections without prior notice, and to inspect Advanced Technology fiber lines for cause, whether or not there is an ongoing violation. EPA also reserves its right to inspect an Advanced Technology mill in connection with specific watershed or airshed concerns.

4. Public Recognition Programs

EPA is pleased to have the opportunity to implement a program in which it can recognize facilities for voluntary activities that achieve further environmental improvements beyond those required by the baseline BAT limitations and NSPS promulgated today. EPA's intention is to provide for easily administered and meaningful public recognition for mills that participate in the Voluntary Advanced Technology Incentives Program. EPA will accord public recognition to mills when they formally enroll in the Program, when they achieve major interim milestones, and when they achieve the ultimate Tier performance requirements. The applicable state permitting authority also may choose to separately recognize a pulp and paper mill for its commitments and achievements toward further environmental improvements. The following paragraphs describe the steps for public recognition. EPA will issue additional guidance to facilitate implementation of this incentive.

a. Enrolling in the Voluntary Advanced Technology Incentives Program. Once a mill has enrolled in the Voluntary Advanced Technology Incentives Program, EPA will issue a letter to each facility acknowledging its participation and identifying the tier limits (and fiber line(s) as appropriate) to which the mill has committed. Each year EPA will publish a **Federal Register** notice identifying mills that have committed to the program within the previous year. The self-selected Tier will be clearly identified, as will any other pertinent information. The **Federal Register** notice will be made available on the EPA Internet web site.

b. Achievement of Milestones. Each time a mill achieves a major milestone (particularly those which achieve reduction in effluent pollutant loadings), EPA will recognize that mill in its annual **Federal Register** notice. In order to qualify for this recognition, each mill must notify its permitting authority and provide supporting monitoring data or other relevant documentation. The permitting authority may choose to visit the site for verification. EPA, in concert with the relevant state NPDES programs, also will then ascertain the status of Clean Water Act compliance and any other enforcement actions prior to public recognition activities. Any criminal enforcement activities, particularly convictions, also will be ascertained. This information on compliance and enforcement status will be available for consideration by EPA senior management prior to initiation of public recognition activities. Relevant information on enforcement and compliance status also may be shared as appropriate with senior management of state permitting agencies that initiate separate public recognition activities. Public recognition for achieving milestones will continue until the date participating mills are required to achieve the ultimate Tier performance requirements.

c. Achievement of Voluntary Advanced Technologies BAT Limitations or NSPS. Mills that achieve their Advanced Technology BAT Limitations or NSPS will notify the permitting authority and submit supporting monitoring data and other relevant documentation. The permitting authority will verify that the Advanced Technology BAT Limitations or NSPS have been achieved. The annual **Federal Register** notice will identify these facilities as reaching their goal. EPA also will participate in an award ceremony at an appropriate venue (e.g., TAPPI Environmental Conference).

5. Reduced Penalties

In recognition of the considerable capital expenditures that mills participating in the Voluntary Advanced Technology Incentives Program will make to implement Advanced Technologies and to achieve pollutant reductions superior to those achievable through the baseline BAT or NSPS, EPA will encourage enforcement authorities to take into account those investments as appropriate when assessing penalties against these mills for violations relating to those Advanced Technologies. Existing EPA settlement policies provide consideration of Advanced Technology investments in this manner. In EPA's view, if a facility has installed and is operating the Advanced Technology in good faith, reports violations in a prompt manner to EPA or the State, and either corrects the violations in a timely manner or agrees to and complies with reasonable remedial measures concurred on by the primary enforcement authority, then the enforcement authority would be justified in taking the Advanced Technology investment into account in determining economic benefit and in reducing the gravity portion of the penalty by up to 100 percent. Where the installation and operation of any Advanced Technology was more expensive than the installation and operation of the technology underlying the baseline BAT, the Advanced Technology facilities would derive no economic benefit (i.e., zero BEN) from the violation associated with the Advanced Technology. This would be the case even when the Advanced Technology fails, as long as the design, operation and installation are within

applicable engineering standards and operational procedures are within industry norms. The decision whether to take such Advanced Technology investments into account in determining economic benefit would be left to the State's discretion when the State is the enforcing authority. EPA will issue guidance to clarify application of this incentive.

Mills also can take advantage of the recently issued audit policy providing they meet the criteria specified in that policy. See 60 FR 66706 (Dec. 22, 1995).

X. Administrative Requirements and Related Government Acts or Initiatives

A. Dockets

The docket is an organized and complete file of all the information submitted to or otherwise considered by EPA in the development of the final regulations. The principal purposes of the docket are: (1) To allow interested parties to readily identify and locate documents so that they can intelligently and effectively participate in the rulemaking process; and (2) to serve as the record in case of judicial review, except for intra-agency review materials as provided for in section 307(d)(7)(A).

1. Air Dockets

Air Docket No. A–92–40 contains information considered by EPA in development of the NESHAP for the chemical wood pulping mills. Air Docket No. A–95–31 contains information considered in developing the NESHAP for mechanical pulping processes, secondary fiber pulping processes, and nonwood fiber pulping processes. The Air Dockets are available for public inspection between 8 a.m. and 4 p.m., Monday through Friday except for Federal holidays, at the following address: U.S. Environmental Protection Agency, Air and Radiation Docket and Information Center (MC–6102), 401 M Street SW, Washington, DC 20460; telephone: (202) 260–7548. The dockets are located at the above address in Room M–1500, Waterside Mall (ground floor). All comments received during the public comment period on the 1993 proposed NESHAP are contained in the Pulp and Paper Water Docket (see following paragraph for location). Comments received on the March 8, 1996, supplemental NESHAP notice at 61 FR 9383 are contained in Air Dockets A–92–40 and A–95–31.

2. Water Docket

The complete public record for the effluent limitations guidelines and standards rulemaking, including EPA's responses to comments received during the rulemaking, is available for review at EPA's Water Docket, Room M2616, 401 M Street SW, Washington, DC 20460. For access to Docket materials, call (202) 260–3027. The Docket staff requests that interested parties call between 9:00 am and 3:30 pm for an appointment before visiting the docket.

The EPA regulations at 40 CFR Part 2 provide that a reasonable fee may be charged for copying materials from the Air and Water Dockets.

EPA notes that many documents in the record supporting these final rules have been claimed as confidential business information (CBI) and, therefore, are not included in the record that is available to the public in the Air and Water Dockets. To support the rulemaking, EPA is presenting certain information in aggregated form or is masking facility identities to preserve confidentiality claims. Further, the Agency has withheld from disclosure some data not claimed as confidential business information because release of this information could indirectly reveal information claimed to be confidential.

B. Executive Order 12866 and OMB Review

Under Executive Order 12866, (58 *FR* 51735, October 4, 1993), the Agency must determine whether the regulatory action is ''significant'' and therefore subject to OMB review and the requirements of the Executive Order. The Order defines ''significant regulatory action'' as one that ''is likely to result in a rule that may: (1) Have an annual effect on the economy of $100 million or more or adversely affect in a material way the economy, a sector of the economy, productivity, competition, jobs, the environment, public health or safety, or State, local, or tribal governments or communities; (2) create a serious inconsistency or otherwise interfere with an action taken or planned by another agency; (3) materially alter the budgetary impact of entitlements, grants, user fees, or loan programs or the rights and obligations of recipients thereof; or (4) raise novel legal or policy issues arising out of legal mandates, the President's priorities, or the principles set forth in the Executive Order.''

Pursuant to the terms of Executive Order 12866, it has been determined that the Cluster Rules are a ''significant regulatory action'' because they will have an annual effect on the economy of $100 million or more. As such, this action was submitted to OMB for review. Changes made in response to OMB suggestions or recommendations are documented in the public record.

C. Regulatory Flexibility Act and the Small Business Regulatory Enforcement Fairness Act of 1996 (SBREFA)

Under the Regulatory Flexibility Act (RFA), 5 U.S.C. 601 *et seq.*, as amended by SBREFA, EPA generally is required to conduct a regulatory flexibility analysis describing the impact of the rule on small entities. However, under section 605(b) of the RFA, EPA is not required to prepare the regulatory flexibility analysis if EPA certifies that the rule will not have a significant economic impact on a substantial number of small entities.

Pursuant to section 605(b) of the RFA, the Agency certifies that today's final CWA rule will not have a significant economic impact on a substantial number of small entities. In addition, EPA also finds that the final CAA rule will not have a significant economic impact on a substantial number of small entities. Small entities, as defined, include small businesses, small governments, and small organizations. This rulemaking does not affect small organizations. For small governments, these rules could directly affect administration or operating costs, but are not expected to result in significant impacts (see Section X.E.). Small businesses are the remaining class of small entity affected by this rulemaking. For small businesses, EPA examined the economic impacts of these rules in detail and the results of its analysis are found in the ''Economic Analysis'' (see DCN 14649). The following is a brief summary of the analysis.

Today's CWA final rule will not have a significant economic impact on a substantial number of small entities, because of those companies affected by the CWA rule, only four are ''a small business concern'' as defined by SBA regulations. (The RFA, in general, requires use of SBA definitions of small businesses; for this regulation, small businesses are defined as firms employing no more than 750 workers.) EPA does not believe this is a substantial number of small entities as that term is used in the RFA. Moreover, while all four small business concerns would experience increased costs of operation as a result of today's rule, the costs of complying with the rule are also not significant. As a measure of the economic impact of today's requirements on a small entity, EPA evaluated the costs of the rule relative to the company's annual revenues. The cost of the rule only exceeded one percent of revenues for one of the facilities and in no case did it exceed three percent.

When the costs of the CWA rule are considered in combination with the costs of the final CAA MACT I and MACT III rules, EPA's conclusion does not change. EPA's analysis showed that the combined costs of achieving compliance with the final air and water rules will not have a significant economic impact on a substantial number of small entities. As noted above, the CWA rule affects only four small entities. Further, the combined costs of the rules only exceeded one percent of revenues for one of the four small entities covered by both the final air and water rules, and for no small entity did it exceed three percent. Even though this is a small cost, because of the poor pre-existing economic conditions at one facility, EPA projects that one facility owned by one of the small firms may close as a result of the combined final CWA and CAA rules. EPA has determined that one closure is not a significant economic impact on a substantial number of small business concerns.

Though not required by the RFA, EPA also examined the costs of the final CWA rule in combination with the costs of the final MACT I and MACT III and proposed MACT II rules. EPA's analysis showed that the combined costs of achieving compliance with the final air and water rules and the proposed MACT II rule would not have a significant economic impact on a substantial number of small entities. As stated before, only four small entities would be affected. The combined cost of the rules would only exceed one percent of revenues for two small entities and for no small entity covered by both the final air and water rules and the proposed air rule would it exceed three percent. Even though this is a small cost, because of the poor pre-existing economic conditions at one facility, EPA projects that one facility owned by one of the small firms may close as a result of the final CWA and final and proposed CAA rules.

EPA's assessment of the impacts on small businesses subject to the final CAA rules yields similar results. EPA evaluated the impacts of the costs of the final MACT I and MACT III rules on small businesses. Of the companies affected by the two CAA rules, only 11 meet the SBA definition of ''a small business concern.'' EPA does not believe this is a substantial number of small entities as that term is used in the RFA. EPA has also examined the extent of the impact on those 11 companies and finds that the costs of complying with the final MACT I rule and the final MACT III rule will not have a significant economic impact on a substantial number of small entities. In evaluating the costs of the rules relative to the company's annual revenues, EPA's analysis shows that no company is estimated to incur costs in excess of one percent of its revenues as a result of implementing the final MACT I and MACT III rules. As a consequence, EPA finds that the CAA rule does not have a significant economic impact on a substantial number of small entities.

When the costs of the final MACT I and MACT III rules are considered in combination with the costs of the final CWA rule, EPA's analysis shows that the combined costs of achieving compliance with the final air and water rules is still not a significant impact on a substantial number of small entities. As discussed, only 11 small business concerns must comply with the CAA rule. Of these, only four will experience additional costs due to the CWA rule. The combined costs of the rules only exceeded one percent of revenues for one small entity covered by both the air and water rules, and for no small entity did it exceed three percent. Even though this is a small cost, because of the poor pre-existing economic conditions at one facility, EPA projects that one facility owned by one of the small firms may close as a result of the combined final CWA and CAA rules.

Though not required by the RFA, EPA also assessed the cumulative economic effect on small entities if the proposed MACT rule is adopted. EPA's conclusion that costs to small entities are not great does not change when the costs of the final and proposed MACT rules are combined with the costs of the final CWA rule. The combined cost of the rules would only exceed one percent of revenues for two small entities covered by both the final air and water rules and the proposed air rule, and for no small entity would it exceed three percent. Even though this is a small cost, because of the poor pre-existing economic conditions at one facility, EPA projects that one facility owned by one of the small firms may close as a result of the combined final CWA and CAA rules.

D. Paperwork Reduction Act

The information collection requirements in the air emissions rules have been submitted for approval to the Office of Management and Budget (OMB) under the *Paperwork Reduction Act,* 44 U.S.C. 3501 *et seq.* An Information Collection Request (ICR) document has been prepared by EPA (ICR No. 1657.02), and a copy may be obtained from Sandy Farmer, OPPE Regulatory Information Division; U.S. Environmental Protection Agency (2137); 401 M St., SW.; Washington, DC 20460 or by calling (202) 260–2740. The information requirements are not effective until OMB approves them.

The information required to be collected by the air emission rules is needed as part of the overall compliance and enforcement program. It is necessary to identify the regulated entities who are subject to the rule and ensure their compliance with the rule. The recordkeeping and reporting requirements are mandatory and are being established under section 114 of the Clean Air Act.

There are approximately 490 respondents that are potentially affected by the air emission rules. All 490 respondents must submit an initial applicability notification. Of the 490 affected respondents, there would be an estimated 155 respondents required to perform additional information collection. For the 155 respondents, this collection of information has an estimated total annual recordkeeping and reporting burden averaging 320 hours per respondent during the first three years after promulgation. For the 155 respondents, the average annualized cost of the reporting and recordkeeping burden per respondent is $29,600 for the first three years following promulgation.

The recordkeeping and reporting burden means the total time, effort, or financial resources expended by persons to generate, maintain, retain, or disclose or provide information to or for a Federal agency. This includes the time needed to review instructions; develop, acquire, install, and utilize technology and systems for the purposes of collecting, validating, and verifying information, processing and maintaining information, and disclosing and providing information; adjust the existing ways to comply with any previously applicable instructions and requirements; train personnel to be able to respond to a collection of information; search data sources; complete and review the collection of information; and transmit or otherwise disclose the information.

Specifically, the estimated 155 respondents must submit performance test notifications, statements of compliance, and semi-annual reports of monitored parameters. The 155 respondents must also conduct performance tests. If compliance exceedances occur, respondents must submit quarterly excess emissions reports. This information will be used to demonstrate compliance with the NESHAP.

Send comments on the Agency's need for this information, the accuracy of the

provided burden estimates, and any suggested methods for minimizing respondent burden, including through the use of automated collection techniques to the Director, OPPE Regulatory Information Division; U.S. Environmental Protection Agency (2137); 401 M St., SW; Washington, DC 20460; and to the Office of Information and Regulatory Affairs, Office of Management and Budget, 725 17th St., NW, Washington, DC 20503, marked ''Attention: Desk Officer for EPA.'' Include the ICR number in any correspondence.

The effluent limitation guidelines and standards promulgated today contain two distinct information collection activities, i.e., specified monitoring requirements, see 40 CFR 430.02, and development of BMP plans and related monitoring, see 40 CFR 430.03(c)(4), (c)(5), (c)(10), (d), (e), (f), (g), (h) and (i)(4). EPA will seek approval of these information collection requirements from the Office of Management and Budget (OMB) under the Paperwork Reduction Act, 44 U.S.C. 3501 *et seq.*, as follows. EPA will seek to amend the NPDES Discharge Monitoring Report ICR No. 229, OMB approval number 2040–0004, expiration May 31, 1998, to add specified monitoring requirements for direct dischargers. EPA will seek to add the specified monitoring requirements for indirect dischargers by amending the National Pretreatment Program ICR No. 2, OMB approval number 2040–0009, prior to its expiration on October 31, 1999. EPA will seek approval of the Best Management Practices ICR No. 1829.01 for the requirements pertaining to BMP plans and associated monitoring. EPA's burden estimates for the BMP ICR are presented for comment in a document published elsewhere in today's **Federal Register**.

An Agency may not conduct or sponsor, and a person is not required to respond to, a collection of information unless it displays a currently valid OMB control number. The OMB control numbers for EPA's regulations are listed in 40 CFR parts 9 and 48 CFR chapter 15.

In addition, direct discharging mills continue to be required, under 40 CFR 122.21, to submit certain information as part of their application for an NPDES permit. Indirect discharging mills, in turn, must submit industrial user reports and periodic reports regarding compliance with categorical pretreatment standards under 40 CFR 403.12(b), (d), and (e). The effluent limitations guidelines and standards being promulgated today do not change those requirements. EPA notes that mills that describe their process as TCF or ECF under 40 CFR 122.21(g)(3) or 40 CFR 403.12(b), (d), or (e) as applicable, supply corroborating data if requested by the permitting authority under 40 CFR 122.21(g)(13), and comply with the signatory and certification requirements in 40 CFR 122.22 or 40 CFR 403.12(l) as applicable will be deemed to have certified their process as TCF or ECF. In addition, direct discharging mills that indicate under 40 CFR 122.21(g)(3) and (g)(13) their desire to participate in the Advanced Technology Incentives Program and comply with the signatory and certification requirements in 40 CFR 122.22 or 40 CFR 122.23, whichever is applicable, will be deemed to have enrolled in the Advanced Technology Incentives Program. In both cases, this information will determine the types of technology-based effluent limitations and standards and the types of monitoring requirements, if any, they will receive. OMB has approved the existing information collection requirements associated with NPDES discharge permit applications and industrial user reports under the Paperwork Reduction Act, 44 U.S.C. 3501, *et seq.* OMB has assigned OMB control number 2040–0086 to the NPDES permit application activity and OMB control numbers 2040–0009 and 2040–0150 to the reporting and certification requirements for industrial users. Nothing in today's rule changes the burden estimates for these ICRs.

All information submitted to the EPA for which a claim of confidentiality is made will be safeguarded according to the EPA policies set forth in Title 40, Chapter 1, Part 2, Subpart B—Confidentiality of Information (see 40 CFR part 2; 41 FR 36902, September 1, 1976; amended by 43 FR 39999, September 8, 1978; 43 FR 42241, September 28, 1978; 44 FR 17674, March 23, 1979).

E. Unfunded Mandates Reform Act

Title II of the Unfunded Mandates Reform Act of 1995 (UMRA), P.L. 104–4, establishes requirements for Federal agencies to assess the effects of their regulatory actions on State, local, and tribal governments and the private sector. Under section 202 of the UMRA, EPA generally must prepare a written statement, including a cost-benefit analysis, for proposed and final rules with ''Federal mandates'' that may result in expenditures to State, local, and tribal governments, in the aggregate, or to the private sector, of $100 million or more in any one year. Before promulgating an EPA rule for which a written statement is needed, section 205 of the UMRA generally requires EPA to identify and consider a reasonable number of regulatory alternatives and adopt the least costly, most cost-effective or least burdensome alternative that achieves the objectives of the rule. The provisions of section 205 do not apply when they are inconsistent with applicable law. Moreover, section 205 allows EPA to adopt an alternative other than the least costly, most cost-effective or least burdensome alternative if the Administrator publishes with the final rule an explanation why that alternative was not adopted. Before EPA establishes any regulatory requirements that may significantly or uniquely affect small governments, including tribal governments, it must have developed under section 203 of the UMRA a small government agency plan. The plan must provide for notifying potentially affected small governments, enabling officials of affected small governments to have meaningful and timely input in the development of EPA regulatory proposals with significant Federal intergovernmental mandates, and informing, educating, and advising small governments on compliance with the regulatory requirements.

EPA has determined that today's final rules contain a Federal mandate that may result in expenditures of $100 million or more for the private sector in any one year. Accordingly, EPA has prepared the written statement required by section 202 of the UMRA. This statement is contained in the Economic Analysis for the rule (DCN 14649) and other support documents and is summarized below. In addition, EPA has determined that the rules contain no regulatory requirements that might significantly or uniquely affect small governments and therefore are not subject to the requirement of section 203 of the UMRA. The reasons for this finding are set forth below.

EPA prepared several supporting analyses for the final rules. Throughout this preamble and in those supporting analyses, EPA has responded to the UMRA section 202 requirements. Considerations with respect to costs, benefits, and regulatory alternatives are addressed in the Economic Analysis (DCN 14649), which is summarized in Section VIII of this preamble. A very brief summary follows.

The statutory authorities for these rules are found in section 112 of the CAA and multiple sections of the CWA (see Section I for a list). In part, these sections of the statutes authorize and direct EPA to issue regulations and standards to address air emissions and effluent discharges.

EPA prepared a qualitative and quantitative cost-benefit assessment of

the federal requirements imposed by today's final rules. In large part, the private sector, not other governments, will incur the costs. Specifically, the costs of this federal mandate are compliance costs to be borne by the regulated pulp and paper mills. In addition, although some States and local governments will incur costs to implement the standards, these costs to governments will not exceed the thresholds established by UMRA. The final rules are not expected to result in significant or unique impacts to small governments; the requirements are consistent with established and already-operating implementation programs.

EPA estimates that the total annualized costs for the private sector to comply with the federal mandate are $351 million (pre-tax)/$229 million (post-tax). The mandate's benefits are primarily in the areas of reduced health risks and improved air and water quality. The Economic Analysis (DCN 14649) describes, qualitatively, many such benefits. The analysis then quantifies a subset of the benefits and, for a subset of the quantified benefits, EPA monetizes (i.e., places a dollar value on) selected benefits. EPA's estimates of the monetized benefits for the final rules are in the range of $39 to $403 million.

EPA does not believe that there will be any disproportionate budgetary effects of the rules on any particular areas of the country, particular types of communities, or particular industry segments. EPA's basis for this finding is its analysis of economic impacts, which is summarized in Section VIII of the preamble and in the Economic Analysis (DCN 14649). A key feature of that analysis is the estimation of financial impacts for each facility incurring compliance costs. EPA considered the costs, impacts, and other effects for specific regions and individual communities, and found no disproportionate budgetary effects. Although these final rules apply only to one industry segment, EPA found no disproportionate budgetary effect. (The term segment as used in this context refers to the industrial category of pulp, paper, and paperboard, and not to individual subcategories within that category; it is used differently in other sections of this preamble.) The Economic Analysis (DCN 14649) also describes the rules' effect on the national economy in terms of effects on productivity, economic growth, and international competitiveness; EPA found such effects to be minimal. Although EPA has determined that these rules do not contain requirements that might significantly or uniquely affect any State, local, or tribal governments (see chapter 7), EPA consulted with State and local air and water pollution control officials. These consultations primarily pertained to implementation issues for States and local governments. EPA's evaluation of their comments is reflected in the final rules.

For each regulatory decision in today's rules, EPA has selected the ''least costly, most cost effective, or least burdensome alternative'' that was consistent with the requirements of the CAA and CWA. This satisfies section 205 of the UMRA. As part of this rulemaking, EPA had identified and considered a reasonable number of regulatory alternatives. Primarily, the regulatory alternatives are manufacturing processes, air emission controls, wastewater discharge controls, and other technologies. Many of the alternatives are described above in Section VI; others are described in supporting documents. The Agency's consideration of alternatives also included an incentives program to encourage bleached papergrade kraft and soda mills to commit to pollution prevention advances beyond the requirements of the federal mandate. See Section IX. The Agency's selection from among these alternatives is consistent with the requirements of UMRA, in terms of cost, cost-effectiveness, and burden. Several sections of the preamble are devoted to describing the Agency's rationale for each regulatory decision (e.g., Sections VI.B.5.a(5) and VI.B.6.b(2)).

Finally, EPA has considered the purpose and intent of the Unfunded Mandates Reform Act and has determined that these rules are needed, not only because of the significant pollutant reductions these rules will achieve, see Section VII, but also to satisfy EPA's obligations under the consent decree in *Environmental Defense Fund and Natural Wildlife Federation* v. *Thomas,* see Section II.C.1.a, and EPA's CAA obligations.

F. Pollution Prevention Act

In the Pollution Prevention Act of 1990 (42 U.S.C. 13101 *et seq.*, Public Law 101–508, November 5, 1990), Congress declared pollution prevention the national policy of the United States. The Pollution Prevention Act declares that pollution should be prevented or reduced whenever feasible; pollution that cannot be prevented or reduced should be recycled or reused in an environmentally safe manner wherever feasible; pollution that cannot be recycled should be treated; and disposal or release into the environment should be chosen only as a last resort.

Today's rules are consistent with this policy. As described in section VI, development of today's rules focused on the pollution-preventing technologies that some segments of the industry have already adopted. Thus, a critical component of the technology bases for today's effluent limitations guidelines and standards are process changes that eliminate or substantially reduce the formation of certain toxic chemicals. EPA also employs process changes as the technology basis for the emission standards.

G. Common Sense Initiative

On August 19, 1994, the Administrator established the Common Sense Initiative (CSI) Council in accordance with the Federal Advisory Committee Act (5 U.S.C. Appendix 2, Section 9 (c)) requirements. A principal goal of the CSI includes developing recommendations for optimal approaches to multimedia controls for industrial sectors including Petroleum Refining, Metal Plating and Finishing, Printing, Electronics and Computers, Auto Manufacturing, and Iron and Steel Manufacturing.

The Pulp and Paper regulations were not among the rulemaking efforts included in the Common Sense Initiative. However, many of the CSI objectives have been incorporated into these final rules, and the Agency intends to continue to pursue these objectives.

H. Executive Order 12875

To reduce the burden of federal regulations on States and small governments, the President issued Executive Order 12875 on October 28, 1993, entitled Enhancing the Intergovernmental Partnership (58 FR 58093). In particular, this executive order requires EPA to consult with representatives of affected State, local, or tribal governments. While these rules do not create mandates upon State, local, or tribal governments, EPA involved State and local governments in their development. Because this regulation imposes costs to the private sector in excess of $100 million, the EPA pursued the preparation of an unfunded mandates statement and the other requirements of the Unfunded Mandates Reform Act. The requirements are met as presented in the unfunded mandate s section above.

I. Executive Order 12898

Executive Order 12898 directs federal agencies to ''determine whether their programs, policies, and activities have

disproportionally high adverse human health or environmental effects on minority populations and low-income populations.'' (Sec.3–301 and Sec. 3–302). In developing the Cluster Rules, EPA analyzed the environmental justice questions raised by these rules. EPA conducted two analyses in 1996 to comply with Executive Order 12898 and to determine human health effects on minority and low-income populations.

First, in a comparison of demographic characteristics, EPA found that there is no significant difference in ethnic makeup or income level of counties where bleached papergrade kraft and soda mills are located when compared to the States in which they are located. In fact, of the twenty-six States with bleached papergrade kraft and soda mills, fifteen States actually have lower minority populations (as a percentage of overall population) in mill counties than in the State as a whole, and sixteen States have a lower percent African-American population in mill counties than in their respective states. Fifteen States have a slightly larger portion of the population living below the poverty line in mill counties (15 percent average) when compared to the State as a whole (14.1 percent average); however, when EPA examined the results statistically, differences examined between mill counties and total State populations were not significant. Therefore, EPA has concluded that the regulatory decisions reflected in today's rules will not have a disproportionately high adverse human health or environmental effect on minority populations or low-income populations.

Second, EPA investigated the fish consumption characteristics of Native American populations downstream from pulp and paper mills. Of the 48 Native American tribes downstream from pulp mills, eight have special subsistence fishing rights. One finding from EPA's analysis is that members of five of these tribes have elevated risks of contracting cancer from consuming fish contaminated by dioxin, when compared to the general population and recreational anglers, because they consume fish at higher levels. EPA expects the final rule to reduce substantially the cancer risks to these tribal populations, as discussed in Chapter 8 of the Economic Analysis (DCN 14649).

J. Submission to Congress and the General Accounting Office

Under 5 U.S.C. 801(a)(1)(A) as amended by the Small Business Regulatory Enforcement Fairness Act of 1996 (SBREFA), EPA submitted a report containing this rule and other required information to the U.S. Senate, the U.S. House of Representatives and the Comptroller General of the General Accounting Office prior to publication of the rule in today's **Federal Register**. This rule is a ''major rule'' as defined by 5 U.S.C. 804(2).

K. National Technology Transfer and Advancement Act

Under Section 12(d) of the National Technology Transfer and Advancement Act, the Agency is required to use voluntary consensus standards in its regulatory and procurement activities unless to do so would be inconsistent with applicable law or otherwise impractical. Voluntary consensus standards are technical standards (e.g., materials specifications, test methods, sampling procedures, business practices, etc.) which are developed or adopted by voluntary consensus standards bodies. Where available and potentially applicable voluntary consensus standards are not used by EPA, the Act requires the Agency to provide Congress, through the Office of Management and Budget, an explanation of the reasons for not using such standards. This section summarizes EPA's response to the requirements of the NTTAA for the analytical test methods promulgated as part of today's effluent limitations guidelines and standards.

EPA's analytical test method development is consistent with the requirements of the NTTAA. Although the Agency initiated data collection for these effluent guidelines many years prior to enactment of the NTTAA, traditionally, analytical test method development has been analogous to the Act's requirements for consideration and use of voluntary consensus standards. EPA performed extensive literature searches to identify any analytical methods from industry, academia, voluntary consensus standards bodies and other parties that could be used to measure the analytes in today's rulemaking. The results of this search formed the basis for EPA's analytical method development and validation in support of this rulemaking. Two new analytical test methods are being promulgated in today's final rule (see Section VI.B.4).

The first method is EPA Method 1650 for determination of adsorbable organic halides (AOX). Development of Method 1650 began in 1989 to support data gathering for regulation of pulp and paper industry discharges. This method was developed by combining various procedures contained in methods from voluntary consensus standards bodies and other standards developing organizations such as German DIN standard 38 409, International Standard Organization (ISO) Method 9562, Scandinavian Method SCAN–W 9:89, Standard Method 5320 (published jointly by the American Public Health Association, the American Water Works Association and the Water Environment Federation), a method published by Environment Canada, EPA's Method 9020 and EPA's interim Method 450.1. The foreign and international methods all employed the batch adsorption technique for determination of AOX; the U.S. methods all employed the column technique. Nearly all data collected by the paper industry and others prior to development of Method 1650 were gathered using the column technique. Method 1650 allows use of both the batch and column techniques but contains restrictions on the batch technique specific to paper industry wastewaters, as detailed in the Method and as described above in Section VI.B.4 and in EPA's responses to public comments (DCN 14497, Vol. VII). In addition to the differences between adsorption techniques, none of the existing methods, including those in voluntary consensus standards, contained the standardized quality control (QC) and QC acceptance criteria that EPA requires for data verification and validation in its water programs. EPA is therefore promulgating the new EPA Method 1650.

EPA is also promulgating EPA Method 1653 for determination of chlorinated phenolics. Development of Method 1653 also began in 1989 to support data gathering for regulation of pulp and paper industry discharges. This method was developed using National Council of the Paper Industry for Air and Stream Improvement (NCASI) Methods CP85.01 and CP86.01 as a starting point and adding the necessary standardized QC and QC acceptance criteria. EPA Method 1653 and the NCASI methods employ in-situ derivatization to assure that only chlorophenolics are derivatized and measured. The in-situ derivatization technique allows only chlorophenolics to be derivatized in the effluent and leaves behind interfering analytes. This condition is necessary for accurate measurement of the relevant analytes. Voluntary consensus standards methods were not available for chlorophenolics by in-situ derivatization. EPA is therefore promulgating the new EPA Method 1653.

Dischargers are also required to monitor for 2,3,7,8-tetrachlorodibenzo-*p*-dioxin (dioxin; TCDD; 2,3,7,8-TCDD), 2,3,7,8-tetrachlorodibenzofuran (TCDF;

2,3,7,8-TCDF), chloroform, biochemical oxygen demand (BOD), and total suspended solids (TSS). Methods for monitoring these pollutants are specified in tables at 40 CFR part 136. When available, methods published by voluntary consensus standards bodies are included in the list of approved methods in these tables. Specifically, voluntary consensus standards are approved for the determination of chloroform, BOD, and TSS (from the 18th edition of Standard Methods). In addition, USGS methods are approved for BOD and TSS.

For TCDD and TCDF, EPA is specifying the use of EPA Method 1613, promulgated at 62 FR 48394 (September 15, 1997). This method was developed to support data gathering for regulation of pulp and paper industry discharges and incorporates procedures from EPA, academia, industry (NCASI and the Dow Chemical Co.) and a commercial laboratory. There were no voluntary consensus standards methods available for these pollutants by high resolution gas chromatography (HRGC) coupled with high resolution mass spectrometry (HRMS) at the time EPA Method 1613 was developed. Both HRGC and HRMS are required to separately detect and measure dioxin and furan isomers at low concentrations (i.e., low parts per quadrillion (ppq)). High resolution techniques are necessary to conduct the assay in the presence of interfering analytes. EPA is unaware of the existence of an HRGC/HRMS method from a voluntary consensus standards body for determination of TCDD and TCDF in the low ppq range in pulp and paper industry discharges.

XI. Background Documents

The summary of public comments and agency responses and the environmental impacts statement for the NESHAP are contained in the final Background Information Document (BID). A paper copy of the final Background Information Document for the NESHAP may be obtained from the U.S. EPA Library (MD–35), Research Triangle Park, North Carolina 27711, telephone (919) 541–2777; or from the National Technical Information Services, 5285 Port Royal Road, Springfield, Virginia 22151, telephone (703) 487–4650. To obtain the final Background Information Document, please refer to ''Pulp, Paper, and Paperboard Industry—Background Information for Promulgated Air Emission Standards, Manufacturing Processes at Kraft, Sulfite, Soda, Semi-Chemical, Mechanical, and Secondary and Non-wood Fiber Mills, Final EIS'' (EPA–453/R–93–050b). An electronic copy of the final Background Information Document is available from the Technology Transfer Network described in the **SUPPLEMENTARY INFORMATION** section of this document.

Documents supporting the effluent limitations guidelines and standards may be obtained by contacting the National Technical Information Services, 5285 Port Royal Road, Springfield, Virginia 22151, telephone (703) 487–4650.

EPA's technical conclusions concerning the wastewater regulations are detailed in the ''Supplemental Technical Development Document for Effluent Limitations Guidelines and Standards for the Pulp, Paper, and Paperboard Point Source Category'' (EPA–821–R–97–011, DCN 14487). The Agency's economic analysis is found in the ''Economic Analysis for the National Emissions Standards for Hazardous Air Pollutants for Source Category: Pulp and Paper Production; Effluent Limitations Guidelines, Pretreatment Standards, and New Source Performance Standards for the Pulp, Paper, and Paperboard Industry—Phase I,'' referred to as the Economic Analysis (EPA–821–R–97–012, DCN 14649). This document also includes an analysis of the incremental costs and pollutant removals for the effluent regulations. Analytical methods used in the development of the effluent guidelines are found in ''Analytical Methods for the Determination of Pollutants in Pulp and Paper Industry Wastewater,'' a compendium of analytical methods (EPA 821–B–97–00). The environmental assessment is presented in the ''Water Quality Assessment of Final Effluent Limitations Guidelines for the Papergrade Sulfite and Bleached Papergrade Kraft and Soda Subcategories of the Pulp, Paper, and Paperboard Industry'' (EPA–823–R–97–009, DCN 14650). The statistical analyses used in this rulemaking are detailed in the ''Statistical Support Document for the Pulp and Paper Industry: Subpart B'' (DCN 14496). The best management practices program is presented in ''Technical Support Document for Best Management Practices for Spent Pulping Liquor Management, Spill Prevention, and Control (DCN 14489), also referred to as the BMP Technical Support Document. The Advanced Technology Incentives Program is presented in the ''Technical Support Document for the Voluntary Advanced Technology Incentives Program,'' (EPA–821–R–97–014, DCN 14488).

List of Subjects

40 CFR Part 63

Environmental protection, Air pollution control, Hazardous substances, Reporting and recordkeeping requirements.

40 CFR Part 261

Hazardous waste, Recycling, Reporting and recordkeeping requirements.

40 CFR Part 430

Paper and paper products industry, Reporting and recordkeeping requirements, Waste treatment and disposal, Water pollution control.

Dated: November 14, 1997.

Carol M. Browner,

Administrator.

For the reasons set out in the preamble, title 40, chapter I of the Code of Federal Regulations is amended as follows:

PART 63—NATIONAL EMISSION STANDARDS FOR HAZARDOUS AIR POLLUTANTS FOR SOURCE CATEGORIES

1. The authority citation for part 63 continues to read as follows:

Authority: 42 U.S.C. 7401, *et seq.*

2. Part 63 is amended by adding subpart S to read as follows:

Subpart S—National Emission Standards for Hazardous Air Pollutants from the Pulp and Paper Industry

Sec.

63.440 Applicability.
63.441 Definitions.
63.442 [Reserved]
63.443 Standards for the pulping system at kraft, soda, and semi-chemical processes.
63.444 Standards for the pulping system at sulfite processes.
63.445 Standards for the bleaching system.
63.446 Standards for kraft pulping process condensates.
63.447 Clean condensate alternative.
63.448–63.449 [Reserved]
63.450 Standards for enclosures and closed-vent systems.
63.451–63.452 [Reserved]
63.453 Monitoring requirements.
63.454 Recordkeeping requirements.
63.455 Reporting requirements.
63.456 [Reserved]
63.457 Test methods and procedures.
63.458 Delegation of authority.
63.459 [Reserved]

Table 1 to Subpart S.—General Provisions Applicability to Subpart S

Subpart S—National Emission Standards for Hazardous Air Pollutants from the Pulp and Paper Industry

§ 63.440 Applicability.

(a) The provisions of this subpart apply to the owner or operator of processes that produce pulp, paper, or paperboard; that are located at a plant site that is a major source as defined in § 63.2 of subpart A of this part; and that use the following processes and materials:

(1) Kraft, soda, sulfite, or semi-chemical pulping processes using wood; or

(2) Mechanical pulping processes using wood; or

(3) Any process using secondary or non-wood fibers.

(b) The affected source to which the existing source provisions of this subpart apply is as follows:

(1) For the processes specified in paragraph (a)(1) of this section, the affected source is the total of all HAP emission points in the pulping and bleaching systems; or

(2) For the processes specified in paragraphs (a)(2) or (a)(3) of this section, the affected source is the total of all HAP emission points in the bleaching system.

(c) The new source provisions of this subpart apply to the total of all HAP emission points at new or existing sources as follows:

(1) Each affected source defined in paragraph (b)(1) of this section that commences construction or reconstruction after December 17, 1993;

(2) Each pulping system or bleaching system for the processes specified in paragraph (a)(1) of this section that commences construction or reconstruction after December 17, 1993;

(3) Each additional pulping or bleaching line at the processes specified in paragraph (a)(1) of this section, that commences construction after December 17, 1993;

(4) Each affected source defined in paragraph (b)(2) of this section that commences construction or reconstruction after March 8, 1996; or

(5) Each additional bleaching line at the processes specified in paragraphs (a)(2) or (a)(3) of this section, that commences construction after March 8, 1996.

(d) Each existing source shall achieve compliance no later than April 16, 2001, except as provided in paragraphs (d)(1) through (d)(3) of this section.

(1) Each kraft pulping system shall achieve compliance with the pulping system provisions of § 63.443 for the equipment listed in § 63.443(a)(1)(ii) through (a)(1)(v) as expeditiously as practicable, but in no event later than April 17, 2006 and the owners and operators shall establish dates, update dates, and report the dates for the milestones specified in § 63.455(b).

(2) Each dissolving-grade bleaching system at either kraft or sulfite pulping mills shall achieve compliance with the bleach plant provisions of § 63.445 of this subpart as expeditiously as practicable, but in no event later than 3 years after the promulgation of the revised effluent limitation guidelines and standards under 40 CFR 430.14 through 430.17 and 40 CFR 430.44 through 430.47.

(3) Each bleaching system complying with the Voluntary Advanced Technology Incentives Program for Effluent Limitation Guidelines in 40 CFR 430.24, shall comply with the requirements specified in either paragraph (d)(3)(i) or (d)(3)(ii) of this section for the effluent limitation guidelines and standards in 40 CFR 430.24.

(i) Comply with the bleach plant provisions of § 63.445 of this subpart as expeditiously as practicable, but in no event later than April 16, 2001.

(ii) Comply with all of the following:

(A) The owner or operator of a bleaching system shall comply with the bleach plant provisions of § 63.445 of this subpart as expeditiously as practicable, but in no event later than April 15, 2004.

(B) The owner or operator of a bleaching system shall not increase the application rate of chlorine or hypochlorite in kg of bleaching agent per megagram of ODP, in the bleaching system above the average daily rates used over the three months prior to June 15, 1998 until the requirements of paragraph (d)(3)(ii)(A) of this section are met and record application rates as specified in § 63.454(c).

(C) Owners and operators shall establish dates, update dates, and report the dates for the milestones specified in § 63.455(b).

(e) Each new source, specified as the total of all HAP emission points for the sources specified in paragraph (c) of this section, shall achieve compliance upon start-up or June 15, 1998, whichever is later, as provided in § 63.6(b) of subpart A of this part.

(f) Each owner or operator of an affected source with affected process equipment shared by more than one type of pulping process, shall comply with the applicable requirement in this subpart that achieves the maximum degree of reduction in HAP emissions.

(g) Each owner or operator of an affected source specified in paragraphs (a) through (c) of this section must comply with the requirements of subpart A—General Provisions of this part, as indicated in table 1 to this subpart.

§ 63.441 Definitions.

All terms used in this subpart shall have the meaning given them in the CAA, in subpart A of this part, and in this section as follows:

Acid condensate storage tank means any storage tank containing cooking acid following the sulfur dioxide gas fortification process.

Black liquor means spent cooking liquor that has been separated from the pulp produced by the kraft, soda, or semi-chemical pulping process.

Bleaching means brightening of pulp by the addition of oxidizing chemicals or reducing chemicals.

Bleaching line means a group of bleaching stages arranged in series such that bleaching of the pulp progresses as the pulp moves from one stage to the next.

Bleaching stage means all process equipment associated with a discrete step of chemical application and removal in the bleaching process including chemical and steam mixers, bleaching towers, washers, seal (filtrate) tanks, vacuum pumps, and any other equipment serving the same function as those previously listed.

Bleaching system means all process equipment after high-density pulp storage prior to the first application of oxidizing chemicals or reducing chemicals following the pulping system, up to and including the final bleaching stage.

Boiler means any enclosed combustion device that extracts useful energy in the form of steam. A boiler is not considered a thermal oxidizer.

Chip steamer means a vessel used for the purpose of preheating or pretreating wood chips prior to the digester, using flash steam from the digester or live steam.

Closed-vent system means a system that is not open to the atmosphere and is composed of piping, ductwork, connections, and, if necessary, flow-inducing devices that transport gas or vapor from an emission point to a control device.

Combustion device means an individual unit of equipment, including but not limited to, a thermal oxidizer, lime kiln, recovery furnace, process heater, or boiler, used for the thermal oxidation of organic hazardous air pollutant vapors.

Decker system means all equipment used to thicken the pulp slurry or reduce its liquid content after the pulp washing system and prior to high-density pulp storage. The decker system includes decker vents, filtrate tanks, associated vacuum pumps, and any other equipment serving the same function as those previously listed.

Digester system means each continuous digester or each batch digester used for the chemical treatment of wood or non-wood fibers. The digester system equipment includes associated flash tank(s), blow tank(s), chip steamer(s) not using fresh steam, blow heat recovery accumulator(s), relief gas condenser(s), prehydrolysis unit(s) preceding the pulp washing system, and any other equipment serving the same function as those previously listed. The digester system includes any of the liquid streams or condensates associated with batch or continuous digester relief, blow, or flash steam processes.

Emission point means any part of a stationary source that emits hazardous air pollutants regulated under this subpart, including emissions from individual process vents, stacks, open pieces of process equipment, equipment leaks, wastewater and condensate collection and treatment system units, and those emissions that could reasonably be conveyed through a stack, chimney, or duct where such emissions first reach the environment.

Evaporator system means all equipment associated with increasing the solids content and/or concentrating spent cooking liquor from the pulp washing system including pre-evaporators, multi-effect evaporators, concentrators, and vacuum systems, as well as associated condensers, hotwells, and condensate streams, and any other equipment serving the same function as those previously listed.

Flow indicator means any device that indicates gas or liquid flow in an enclosed system.

HAP means a hazardous air pollutant as defined in § 63.2 of subpart A of this part.

High volume, low concentration or HVLC collection system means the gas collection and transport system used to convey gases from the HVLC system to a control device.

High volume, low concentration or HVLC system means the collection of equipment including the pulp washing, knotter, screen, decker, and oxygen delignification systems, weak liquor storage tanks, and any other equipment serving the same function as those previously listed.

Knotter system means equipment where knots, oversized material, or pieces of uncooked wood are removed from the pulp slurry after the digester system and prior to the pulp washing system. The knotter system equipment includes the knotter, knot drainer tanks, ancillary tanks, and any other equipment serving the same function as those previously listed.

Kraft pulping means a chemical pulping process that uses a mixture of sodium hydroxide and sodium sulfide as the cooking liquor.

Lime kiln means an enclosed combustion device used to calcine lime mud, which consists primarily of calcium carbonate, into calcium oxide.

Low volume, high concentration or LVHC collection system means the gas collection and transport system used to convey gases from the LVHC system to a control device.

Low volume, high concentration or LVHC system means the collection of equipment including the digester, turpentine recovery, evaporator, steam stripper systems, and any other equipment serving the same function as those previously listed.

Mechanical pulping means a pulping process that only uses mechanical and thermo-mechanical processes to reduce wood to a fibrous mass. The mechanical pulping processes include, but are not limited to, stone groundwood, pressurized groundwood, refiner mechanical, thermal refiner mechanical, thermo-mechanical, and tandem thermo-mechanical.

Non-wood pulping means the production of pulp from fiber sources other than trees. The non-wood fiber sources include, but are not limited to, bagasse, cereal straw, cotton, flax straw, hemp, jute, kenaf, and leaf fibers.

Oven-dried pulp or ODP means a pulp sample at zero percent moisture content by weight. Pulp samples for applicability or compliance determinations for both the pulping and bleaching systems shall be unbleached pulp. For purposes of complying with mass emission limits in this subpart, megagram of ODP shall be measured to represent the amount of pulp entering and processed by the equipment system under the specified mass limit. For equipment that does not process pulp, megagram of ODP shall be measured to represent the amount of pulp that was processed to produce the gas and liquid streams.

Oxygen delignification system means the equipment that uses oxygen to remove lignin from pulp after high-density stock storage and prior to the bleaching system. The oxygen delignification system equipment includes the blow tank, washers, filtrate tanks, any interstage pulp storage tanks, and any other equipment serving the same function as those previously listed.

Primary fuel means the fuel that provides the principal heat input to the combustion device. To be considered primary, the fuel must be able to sustain operation of the combustion device without the addition of other fuels.

Process wastewater treatment system means a collection of equipment, a process, or specific technique that removes or destroys the HAP's in a process wastewater stream. Examples include, but are not limited to, a steam stripping unit, wastewater thermal oxidizer, or biological treatment unit.

Pulp washing system means all equipment used to wash pulp and separate spent cooking chemicals following the digester system and prior to the bleaching system, oxygen delignification system, or paper machine system (at unbleached mills). The pulp washing system equipment includes vacuum drum washers, diffusion washers, rotary pressure washers, horizontal belt filters, intermediate stock chests, and their associated vacuum pumps, filtrate tanks, foam breakers or tanks, and any other equipment serving the same function as those previously listed. The pulp washing system does not include deckers, screens, knotters, stock chests, or pulp storage tanks following the last stage of pulp washing.

Pulping line means a group of equipment arranged in series such that the wood chips are digested and the resulting pulp progresses through a sequence of steps that may include knotting, refining, washing, thickening, blending, storing, oxygen delignification, and any other equipment serving the same function as those previously listed.

Pulping process condensates means any HAP-containing liquid that results from contact of water with organic compounds in the pulping process. Examples of process condensates include digester system condensates, turpentine recovery system condensates, evaporator system condensates, LVHC system condensates, HVLC system condensates, and any other condensates from equipment serving the same function as those previously listed. Liquid streams that are intended for byproduct recovery are not considered process condensate streams.

Pulping system means all process equipment, beginning with the digester system, and up to and including the last piece of pulp conditioning equipment prior to the bleaching system, including

treatment with ozone, oxygen, or peroxide before the first application of a chemical bleaching agent intended to brighten pulp. The pulping system includes pulping process condensates and can include multiple pulping lines.

Recovery furnace means an enclosed combustion device where concentrated spent liquor is burned to recover sodium and sulfur, produce steam, and dispose of unwanted dissolved wood components in the liquor.

Screen system means equipment in which oversized particles are removed from the pulp slurry prior to the bleaching or papermaking system washed stock storage.

Secondary fiber pulping means a pulping process that converts a fibrous material, that has previously undergone a manufacturing process, into pulp stock through the addition of water and mechanical energy. The mill then uses that pulp as the raw material in another manufactured product. These mills may also utilize chemical, heat, and mechanical processes to remove ink particles from the fiber stock.

Semi-chemical pulping means a pulping process that combines both chemical and mechanical pulping processes. The semi-chemical pulping process produces intermediate yields ranging from 55 to 90 percent.

Soda pulping means a chemical pulping process that uses sodium hydroxide as the active chemical in the cooking liquor.

Spent liquor means process liquid generated from the separation of cooking liquor from pulp by the pulp washing system containing dissolved organic wood materials and residual cooking compounds.

Steam stripper system means a column (including associated stripper feed tanks, condensers, or heat exchangers) used to remove compounds from wastewater or condensates using steam. The steam stripper system also contains all equipment associated with a methanol rectification process including rectifiers, condensers, decanters, storage tanks, and any other equipment serving the same function as those previously listed.

Strong liquor storage tanks means all storage tanks containing liquor that has been concentrated in preparation for combustion or oxidation in the recovery process.

Sulfite pulping means a chemical pulping process that uses a mixture of sulfurous acid and bisulfite ion as the cooking liquor.

Temperature monitoring device means a piece of equipment used to monitor temperature and having an accuracy of ±1.0 percent of the temperature being monitored expressed in degrees Celsius or ±0.5 degrees Celsius (°C), whichever is greater.

Thermal oxidizer means an enclosed device that destroys organic compounds by thermal oxidation.

Turpentine recovery system means all equipment associated with recovering turpentine from digester system gases including condensers, decanters, storage tanks, and any other equipment serving the same function as those previously listed. The turpentine recovery system includes any liquid streams associated with the turpentine recovery process such as turpentine decanter underflow. Liquid streams that are intended for byproduct recovery are not considered turpentine recovery system condensate streams.

Weak liquor storage tank means any storage tank except washer filtrate tanks containing spent liquor recovered from the pulping process and prior to the evaporator system.

§ 63.442 [Reserved]

§ 63.443 Standards for the pulping system at kraft, soda, and semi-chemical processes.

(a) The owner or operator of each pulping system using the kraft process subject to the requirements of this subpart shall control the total HAP emissions from the following equipment systems, as specified in paragraphs (c) and (d) of this section.

(1) At existing affected sources, the total HAP emissions from the following equipment systems shall be controlled:

(i) Each LVHC system;

(ii) Each knotter or screen system with total HAP mass emission rates greater than or equal to the rates specified in paragraphs (a)(1)(ii)(A) or (a)(1)(ii)(B) of this section or the combined rate specified in paragraph (a)(1)(ii)(C) of this section.

(A) Each knotter system with emissions of 0.05 kilograms or more of total HAP per megagram of ODP (0.1 pounds per ton).

(B) Each screen system with emissions of 0.10 kilograms or more of total HAP per megagram of ODP (0.2 pounds per ton).

(C) Each knotter and screen system with emissions of 0.15 kilograms or more of total HAP per megagram of ODP (0.3 pounds per ton).

(iii) Each pulp washing system;

(iv) Each decker system that:

(A) Uses any process water other than fresh water or paper machine white water; or

(B) Uses any process water with a total HAP concentration greater than 400 parts per million by weight; and

(v) Each oxygen delignification system.

(2) At new affected sources, the total HAP emissions from the equipment systems listed in paragraphs (a)(1)(i), (a)(1)(iii), and (a)(1)(v) of this section and the following equipment systems shall be controlled:

(i) Each knotter system;

(ii) Each screen system;

(iii) Each decker system; and

(iv) Each weak liquor storage tank.

(b) The owner or operator of each pulping system using a semi-chemical or soda process subject to the requirements of this subpart shall control the total HAP emissions from the following equipment systems as specified in paragraphs (c) and (d) of this section.

(1) At each existing affected sources, the total HAP emissions from each LVHC system shall be controlled.

(2) At each new affected source, the total HAP emissions from each LVHC system and each pulp washing system shall be controlled.

(c) Equipment systems listed in paragraphs (a) and (b) of this section shall be enclosed and vented into a closed-vent system and routed to a control device that meets the requirements specified in paragraph (d) of this section. The enclosures and closed-vent system shall meet the requirements specified in § 63.450.

(d) The control device used to reduce total HAP emissions from each equipment system listed in paragraphs (a) and (b) of this section shall:

(1) Reduce total HAP emissions by 98 percent or more by weight; or

(2) Reduce the total HAP concentration at the outlet of the thermal oxidizer to 20 parts per million or less by volume, corrected to 10 percent oxygen on a dry basis; or

(3) Reduce total HAP emissions using a thermal oxidizer designed and operated at a minimum temperature of 871 °C (1600 °F) and a minimum residence time of 0.75 seconds; or

(4) Reduce total HAP emissions using a boiler, lime kiln, or recovery furnace by introducing the HAP emission stream with the primary fuel or into the flame zone.

(e) Periods of excess emissions reported under § 63.455 shall not be a violation of § 63.443 (c) and (d) provided that the time of excess emissions (excluding periods of startup, shutdown, or malfunction) divided by the total process operating time in a semi-annual reporting period does not exceed the following levels:

(1) One percent for control devices used to reduce the total HAP emissions from the LVHC system; and

(2) Four percent for control devices used to reduce the total HAP emissions from the HVLC system; and

(3) Four percent for control devices used to reduce the total HAP emissions from both the LVHC and HVLC systems.

§ 63.444 Standards for the pulping system at sulfite processes.

(a) The owner or operator of each sulfite process subject to the requirements of this subpart shall control the total HAP emissions from the following equipment systems as specified in paragraphs (b) and (c) of this section.

(1) At existing sulfite affected sources, the total HAP emissions from the following equipment systems shall be controlled:

(i) Each digester system vent;

(ii) Each evaporator system vent; and

(iii) Each pulp washing system.

(2) At new affected sources, the total HAP emissions from the equipment systems listed in paragraph (a)(1) of this section and the following equipment shall be controlled:

(i) Each weak liquor storage tank;

(ii) Each strong liquor storage tank; and

(iii) Each acid condensate storage tank.

(b) Equipment listed in paragraph (a) of this section shall be enclosed and vented into a closed-vent system and routed to a control device that meets the requirements specified in paragraph (c) of this section. The enclosures and closed-vent system shall meet the requirements specified in § 63.450. Emissions from equipment listed in paragraph (a) of this section that is not necessary to be reduced to meet paragraph (c) of this section is not required to be routed to a control device.

(c) The total HAP emissions from both the equipment systems listed in paragraph (a) of this section and the vents, wastewater, and condensate streams from the control device used to reduce HAP emissions, shall be controlled as follows.

(1) Each calcium-based or sodium-based sulfite pulping process shall:

(i) Emit no more than 0.44 kilograms of total HAP or methanol per megagram (0.89 pounds per ton) of ODP; or

(ii) Remove 92 percent or more by weight of the total HAP or methanol.

(2) Each magnesium-based or ammonium-based sulfite pulping process shall:

(i) Emit no more than 1.1 kilograms of total HAP or methanol per megagram (2.2 pounds per ton) of ODP; or

(ii) Remove 87 percent or more by weight of the total HAP or methanol.

§ 63.445 Standards for the bleaching system.

(a) Each bleaching system that does not use any chlorine or chlorinated compounds for bleaching is exempt from the requirements of this section. Owners or operators of the following bleaching systems shall meet all the provisions of this section:

(1) Bleaching systems that use chlorine;

(2) Bleaching systems bleaching pulp from kraft, sulfite, or soda pulping processes that uses any chlorinated compounds; or

(3) Bleaching systems bleaching pulp from mechanical pulping processes using wood or from any process using secondary or non-wood fibers, that use chlorine dioxide.

(b) The equipment at each bleaching stage, of the bleaching systems listed in paragraph (a) of this section, where chlorinated compounds are introduced shall be enclosed and vented into a closed-vent system and routed to a control device that meets the requirements specified in paragraph (c) of this section. The enclosures and closed-vent system shall meet the requirements specified in § 63.450.

(c) The control device used to reduce chlorinated HAP emissions (not including chloroform) from the equipment specified in paragraph (b) of this section shall:

(1) Reduce the total chlorinated HAP mass in the vent stream entering the control device by 99 percent or more by weight;

(2) Achieve a treatment device outlet concentration of 10 parts per million or less by volume of total chlorinated HAP; or

(3) Achieve a treatment device outlet mass emission rate of 0.001 kg of total chlorinated HAP mass per megagram (0.002 pounds per ton) of ODP.

(d) The owner or operator of each bleaching system subject to paragraph (a)(2) of this section shall comply with paragraph (d)(1) or (d)(2) of this section to reduce chloroform air emissions to the atmosphere, except the owner or operator of each bleaching system complying with extended compliance under § 63.440(d)(3)(ii) shall comply with paragraph (d)(1) of this section.

(1) Comply with the following applicable effluent limitation guidelines and standards specified in 40 CFR part 430:

(i) Dissolving-grade kraft bleaching systems and lines, 40 CFR 430.14 through 430.17;

(ii) Paper-grade kraft and soda bleaching systems and lines, 40 CFR 430.24(a)(1) and (e), and 40 CFR 430.26 (a) and (c);

(iii) Dissolving-grade sulfite bleaching systems and lines, 40 CFR 430.44 through 430.47; or

(iv) Paper-grade sulfite bleaching systems and lines, 40 CFR 430.54(a) and (c), and 430.56(a) and (c).

(2) Use no hypochlorite or chlorine for bleaching in the bleaching system or line.

§ 63.446 Standards for kraft pulping process condensates.

(a) The requirements of this section apply to owners or operators of kraft processes subject to the requirements of this subpart.

(b) The pulping process condensates from the following equipment systems shall be treated to meet the requirements specified in paragraphs (c), (d), and (e) of this section:

(1) Each digester system;

(2) Each turpentine recovery system;

(3) Each evaporator stage where weak liquor is introduced (feed stages) in the evaporator system;

(4) Each HVLC collection system; and

(5) Each LVHC collection system.

(c) One of the following combinations of HAP-containing pulping process condensates generated, produced, or associated with the equipment systems listed in paragraph (b) of this section shall be subject to the requirements of paragraphs (d) and (e) of this section:

(1) All pulping process condensates from the equipment systems specified in paragraphs (b)(1) through (b)(5) of this section.

(2) The combined pulping process condensates from the equipment systems specified in paragraphs (b)(4) and (b)(5) of this section, plus pulping process condensate stream(s) that in total contain at least 65 percent of the total HAP mass from the pulping process condensates from equipment systems listed in paragraphs (b)(1) through (b)(3) of this section.

(3) The pulping process condensates from equipment systems listed in paragraphs (b)(1) through (b)(5) of this section that in total contain a total HAP mass of 3.6 kilograms or more of total HAP per megagram (7.2 pounds per ton) of ODP for mills that do not perform bleaching or 5.5 kilograms or more of total HAP per megagram (11.1 pounds per ton) of ODP for mills that perform bleaching.

(d) The pulping process condensates from the equipment systems listed in paragraph (b) of this section shall be conveyed in a closed collection system that is designed and operated to meet the requirements specified in paragraphs (d)(1) and (d)(2) of this section.

(1) Each closed collection system shall meet the individual drain system

requirements specified in § 63.960, 63.961, and 63.962 of subpart RR of this part, except for closed vent systems and control devices shall be designed and operated in accordance with §§ 63.443(d) and 63.450, instead of in accordance with § 63.693 as specified in § 63.962 (a)(3)(ii), (b)(3)(ii)(A), and (b)(3)(ii)(B)(5)(*iii*); and

(2) If a condensate tank is used in the closed collection system, the tank shall meet the following requirements:

(i) The fixed roof and all openings (e.g., access hatches, sampling ports, gauge wells) shall be designed and operated with no detectable leaks as indicated by an instrument reading of less than 500 parts per million above background, and vented into a closed-vent system that meets the requirements in § 63.450 and routed to a control device that meets the requirements in § 63.443(d); and

(ii) Each opening shall be maintained in a closed, sealed position (e.g., covered by a lid that is gasketed and latched) at all times that the tank contains pulping process condensates or any HAP removed from a pulping process condensate stream except when it is necessary to use the opening for sampling, removal, or for equipment inspection, maintenance, or repair.

(e) Each pulping process condensate from the equipment systems listed in paragraph (b) of this section shall be treated according to one of the following options:

(1) Recycle the pulping process condensate to an equipment system specified in § 63.443(a) meeting the requirements specified in § 63.443(c) and (d); or

(2) Discharge the pulping process condensate below the liquid surface of a biological treatment system meeting the requirement specified in paragraph (e)(3) of this section; or

(3) Treat the pulping process condensates to reduce or destroy the total HAP's by at least 92 percent or more by weight; or

(4) At mills that do not perform bleaching, treat the pulping process condensates to remove 3.3 kilograms or more of total HAP per megagram (6.6 pounds per ton) of ODP, or achieve a total HAP concentration of 210 parts per million or less by weight at the outlet of the control device; or

(5) At mills that perform bleaching, treat the pulping process condensates to remove 5.1 kilograms or more of total HAP per megagram (10.2 pounds per ton) of ODP, or achieve a total HAP concentration of 330 parts per million or less by weight at the outlet of the control device.

(f) Each HAP removed from a pulping process condensate stream during treatment and handling under paragraphs (d) or (e) of this section, except for those treated according to paragraph (e)(2) of this section, shall be controlled as specified in § 63.443(c) and (d).

(g) For each steam stripper system used to comply with the requirements specified in paragraph (e)(3) of this section, periods of excess emissions reported under § 63.455 shall not be a violation of paragraphs (d), (e), and (f) of this section provided that the time of excess emissions (including periods of startup, shutdown, or malfunction) divided by the total process operating time in a semi-annual reporting period does not exceed 10 percent.

(h) Each owner or operator of a new or existing affected source subject to the requirements of this section shall evaluate all new or modified pulping process condensates or changes in the annual bleached or non-bleached ODP used to comply with paragraph (i) of this section, to determine if they meet the applicable requirements of this section.

(i) For the purposes of meeting the requirements in paragraphs (c)(2), (e)(4), or (e)(5) of this section at mills producing both bleached and unbleached pulp products, owners and operators may meet a prorated mass standard that is calculated by prorating the applicable mass standards (kilograms of total HAP per megagram of ODP) for bleached and unbleached specified in paragraphs (c)(2), (e)(4), or (e)(5) of this section by the ratio of annual megagrams of bleached and unbleached ODP.

§ 63.447 Clean condensate alternative.

As an alternative to the requirements specified in § 63.443(a)(1)(ii) through (a)(1)(v) for the control of HAP emissions from pulping systems using the kraft process, an owner or operator must demonstrate to the satisfaction of the Administrator, by meeting all the requirements below, that the total HAP emissions reductions achieved by this clean condensate alternative technology are equal to or greater than the total HAP emission reductions that would have been achieved by compliance with § 63.443(a)(1)(ii) through (a)(1)(v).

(a) For the purposes of this section only the following additional definitions apply.

(1) *Clean condensate alternative affected source* means the total of all HAP emission points in the pulping, bleaching, causticizing, and papermaking systems (exclusive of HAP emissions attributable to additives to paper machines and HAP emission points in the LVHC system).

(2) *Causticizing system* means all equipment associated with converting sodium carbonate into active sodium hydroxide. The equipment includes smelt dissolving tanks, lime mud washers and storage tanks, white and mud liquor clarifiers and storage tanks, slakers, slaker grit washers, lime kilns, green liquor clarifiers and storage tanks, and dreg washers ending with the white liquor storage tanks prior to the digester system, and any other equipment serving the same function as those previously listed.

(3) *Papermaking system* means all equipment used to convert pulp into paper, paperboard, or market pulp, including the stock storage and preparation systems, the paper or paperboard machines, and the paper machine white water system, broke recovery systems, and the systems involved in calendering, drying, on-machine coating, slitting, winding, and cutting.

(b) Each owner or operator shall install and operate a clean condensate alternative technology with a continuous monitoring system to reduce total HAP emissions by treating and reducing HAP concentrations in the pulping process water used within the clean condensate alternative affected source.

(c) Each owner or operator shall calculate HAP emissions on a kilogram per megagram of ODP basis and measure HAP emissions according to the appropriate procedures contained in § 63.457.

(d) Each owner or operator shall determine the baseline HAP emissions for each equipment system and the total of all equipment systems in the clean condensate alternative affected source based on the following:

(1) Process and air pollution control equipment installed and operating on or after December 17, 1993, and

(2) Compliance with the following requirements that affect the level of HAP emissions from the clean condensate alternative affected source:

(i) The pulping process condensates requirements in § 63.446;

(ii) The applicable effluent limitation guidelines and standards in 40 CFR part 430, subparts A, B, D, and E; and

(iii) All other applicable requirements of local, State, or Federal agencies or statutes.

(e) Each owner or operator shall determine the following HAP emission reductions from the baseline HAP emissions determined in paragraph (d) of this section for each equipment system and the total of all equipment

systems in the clean condensate alternative affected source:

(1) The HAP emission reduction occurring by complying with the requirements of § 63.443(a)(1)(ii) through (a)(1)(v); and

(2) The HAP emissions reduction that occurring by complying with the clean condensate alternative technology.

(f) For the purposes of all requirements in this section, each owner or operator may use as an alternative, individual equipment systems (instead of total of all equipment systems) within the clean condensate alternative affected source to determine emissions and reductions to demonstrate equal or greater than the reductions that would have been achieved by compliance with § 63.443(a)(1)(ii) through (a)(1)(v).

(g) The initial and updates to the control strategy report specified in § 63.455(b) shall include to the extent possible the following information:

(1) A detailed description of:

(i) The equipment systems and emission points that comprise the clean condensate alternative affected source;

(ii) The air pollution control technologies that would be used to meet the requirements of § 63.443(a)(1)(ii) through (a)(1)(v);

(iii) The clean condensate alternative technology to be used.

(2) Estimates and basis for the estimates of total HAP emissions and emissions reductions to fulfill the requirements paragraphs (d), (e), and (f) of this section.

(h) Each owner or operator shall report to the Administrator by the applicable compliance date specified in § 63.440(d) or (e) the rationale, calculations, test procedures, and data documentation used to demonstrate compliance with all the requirements of this section.

§§ 63.448–63.449 [Reserved]

§ 63.450 Standards for enclosures and closed-vent systems.

(a) Each enclosure and closed-vent system specified in §§ 63.443(c), 63.444(b), and 63.445(b) for capturing and transporting vent streams that contain HAP shall meet the requirements specified in paragraphs (b) through (d) of this section.

(b) Each enclosure shall maintain negative pressure at each enclosure or hood opening as demonstrated by the procedures specified § 63.457(e). Each enclosure or hood opening closed during the initial performance test specified in § 63.457(a) shall be maintained in the same closed and sealed position as during the performance test at all times except when necessary to use the opening for sampling, inspection, maintenance, or repairs.

(c) Each component of the closed-vent system used to comply with §§ 63.443(c), 63.444(b), and 63.445(b) that is operated at positive pressure and located prior to a control device shall be designed for and operated with no detectable leaks as indicated by an instrument reading of less than 500 parts per million by volume above background, as measured by the procedures specified in § 63.457(d).

(d) Each bypass line in the closed-vent system that could divert vent streams containing HAP to the atmosphere without meeting the emission limitations in §§ 63.443, 63.444, or 63.445 shall comply with either of the following requirements:

(1) On each bypass line, the owner or operator shall install, calibrate, maintain, and operate according to manufacturer's specifications a flow indicator that provides a record of the presence of gas stream flow in the bypass line at least once every 15 minutes. The flow indicator shall be installed in the bypass line in such a way as to indicate flow in the bypass line; or

(2) For bypass line valves that are not computer controlled, the owner or operator shall maintain the bypass line valve in the closed position with a car seal or a seal placed on the valve or closure mechanism in such a way that valve or closure mechanism cannot be opened without breaking the seal.

§§ 63.451–63.452 [Reserved]

§ 63.453 Monitoring requirements.

(a) Each owner or operator subject to the standards specified in §§ 63.443(c) and (d), 63.444(b) and (c), 63.445(b) and (c), 63.446(c), (d), and (e), 63.447(b) or § 63.450(d), shall install, calibrate, certify, operate, and maintain according to the manufacturer's specifications, a continuous monitoring system (CMS, as defined in § 63.2 of this part) as specified in paragraphs (b) through (m) of this section, except as allowed in paragraph (m) of this section. The CMS shall include a continuous recorder.

(b) A CMS shall be operated to measure the temperature in the firebox or in the ductwork immediately downstream of the firebox and before any substantial heat exchange occurs for each thermal oxidizer used to comply with the requirements of § 63.443(d)(1) through (d)(3). Owners and operators complying with the requirements in § 63.443(d)(2) or (d)(3) shall monitor the parameter specified and for the temperature and concentration limits specified.

(c) A CMS shall be operated to measure the following parameters for each gas scrubber used to comply with the bleaching system requirements of § 63.445(c) or the sulfite pulping system requirements of § 63.444(c).

(1) The pH or the oxidation/reduction potential of the gas scrubber effluent;

(2) The gas scrubber vent gas inlet flow rate; and

(3) The gas scrubber liquid influent flow rate.

(d) As an option to the requirements specified in paragraph (c) of this section, a CMS shall be operated to measure the chlorine outlet concentration of each gas scrubber used to comply with the bleaching system outlet concentration requirement specified in § 63.445(c)(2).

(e) The owner or operator of a bleaching system complying with 40 CFR 430.24, shall monitor the chlorine and hypochlorite application rates, in kg of bleaching agent per megagram of ODP, of the bleaching system during the extended compliance period specified in § 63.440(d)(3).

(f) A CMS shall be operated to measure the gas scrubber parameters specified in paragraphs (c)(1) through (c)(3) of this section or those site specific parameters determined according to the procedures specified in paragraph (n) of this section to comply with the sulfite pulping system requirements specified in § 63.444(c).

(g) A CMS shall be operated to measure the following parameters for each steam stripper used to comply with the treatment requirements in § 63.446(e) (3), (4), or (5):

(1) The process wastewater feed rate;

(2) The steam feed rate; and

(3) The process wastewater column feed temperature.

(h) As an option to the requirements specified in paragraph (g) of this section, a CMS shall be operated to measure the methanol outlet concentration to comply with the steam stripper outlet concentration requirement specified in § 63.446 (e)(4) or (e)(5).

(i) A CMS shall be operated to measure the appropriate parameters determined according to the procedures specified in paragraph (n) of this section to comply with the condensate applicability requirements specified in § 63.446(c).

(j) Each owner or operator using a biological treatment system to comply with § 63.446(e)(2) shall perform the following monitoring procedures.

(1) On a daily basis, monitor the following parameters for each biological treatment unit:

(i) Composite daily sample of outlet soluble BOD_5 concentration to monitor for maximum daily and maximum monthly average;

(ii) Mixed liquor volatile suspended solids;

(iii) Horsepower of aerator unit(s);

(iv) Inlet liquid flow; and

(v) Liquid temperature.

(2) Obtain daily inlet and outlet liquid grab samples from each biological treatment unit to have HAP data available to perform quarterly percent reduction tests specified in paragraph (j)(2)(ii) of this section and the compliance percent reduction tests specified in paragraph (p)(1)(i) of this section. Perform the following procedures with the liquid samples:

(i) Store the samples for 5 days as specified in § 63.457(n). The 5 day storage requirement is required since the soluble BOD_5 test requires 5 days to obtain results. If the results of the soluble BOD_5 test are outside of the range established during the initial performance test, then the archive sample shall be used to perform the percent reduction test specified in § 63.457(1).

(ii) Perform the percent reduction test procedures specified in § 63.457(l) within 45 days after the beginning of each quarter as follows.

(A) The percent reduction test performed in the first quarter (annually) shall be performed for total HAP and the percent reduction obtained from the test shall be at least as great as the total HAP reduction specified in § 63.446(e)(2).

(B) The remaining quarterly percent reduction tests shall be performed for methanol and the percent reduction obtained from the test shall be at least as great as the methanol reduction determined in the previous first-quarter test specified in paragraph (j)(2)(ii)(A) of this section.

(C) The parameter values used to calculate the percent reductions required in paragraphs (j)(2)(ii)(A) and (j)(2)(ii)(B) of this section shall be parameter values measured and samples taken in paragraph (j)(1) of this section.

(k) Each enclosure and closed-vent system used to comply with § 63.450(a) shall comply with the requirements specified in paragraphs (k)(1) through (k)(6) of this section.

(1) For each enclosure opening, a visual inspection of the closure mechanism specified in § 63.450(b) shall be performed at least once every 30 days to ensure the opening is maintained in the closed position and sealed.

(2) Each closed-vent system required by § 63.450(a) shall be visually inspected every 30 days and at other times as requested by the Administrator. The visual inspection shall include inspection of ductwork, piping, enclosures, and connections to covers for visible evidence of defects.

(3) For positive pressure closed-vent systems or portions of closed-vent systems, demonstrate no detectable leaks as specified in § 63.450(c) measured initially and annually by the procedures in § 63.457(d).

(4) Demonstrate initially and annually that each enclosure opening is maintained at negative pressure as specified in § 63.457(e).

(5) The valve or closure mechanism specified in § 63.450(d)(2) shall be inspected at least once every 30 days to ensure that the valve is maintained in the closed position and the emission point gas stream is not diverted through the bypass line.

(6) If an inspection required by paragraphs (k)(1) through (k)(5) of this section identifies visible defects in ductwork, piping, enclosures or connections to covers required by § 63.450, or if an instrument reading of 500 parts per million by volume or greater above background is measured, or if enclosure openings are not maintained at negative pressure, then the following corrective actions shall be taken as soon as practicable.

(i) A first effort to repair or correct the closed-vent system shall be made as soon as practicable but no later than 5 calendar days after the problem is identified.

(ii) The repair or corrective action shall be completed no later than 15 calendar days after the problem is identified.

(l) Each pulping process condensate closed collection system used to comply with § 63.446(d) shall be visually inspected every 30 days and shall comply with the inspection and monitoring requirements specified in § 63.964 of subpart RR of this part, except for the closed-vent system and control device inspection and monitoring requirements specified in § 63.964(a)(2) of subpart RR of this part, the closed-vent system and the control device shall meet the requirements specified in paragraphs (a) and (k) of this section.

(m) Each owner or operator using a control device, technique or an alternative parameter other than those specified in paragraphs (b) through (l) of this section shall install a CMS and establish appropriate operating parameters to be monitored that demonstrate, to the Administrator's satisfaction, continuous compliance with the applicable control requirements.

(n) To establish or reestablish, the value for each operating parameter required to be monitored under paragraphs (b) through (j), (l), and (m) of this section or to establish appropriate parameters for paragraphs (f), (i), and (m) of this section, each owner or operator shall use the following procedures:

(1) During the initial performance test required in § 63.457(a) or any subsequent performance test, continuously record the operating parameter;

(2) Determinations shall be based on the control performance and parameter data monitored during the performance test, supplemented if necessary by engineering assessments and the manufacturer's recommendations;

(3) The owner or operator shall provide for the Administrator's approval the rationale for selecting the monitoring parameters necessary to comply with paragraphs (f), (i), and (m) of this section; and

(4) Provide for the Administrator's approval the rationale for the selected operating parameter value, and monitoring frequency, and averaging time. Include all data and calculations used to develop the value and a description of why the value, monitoring frequency, and averaging time demonstrate continuous compliance with the applicable emission standard.

(o) Each owner or operator of a control device subject to the monitoring provisions of this section shall operate the control device in a manner consistent with the minimum or maximum (as appropriate) operating parameter value or procedure required to be monitored under paragraphs (a) through (n) of this section and established under this subpart. Except as provided in paragraph (p) of this section, § 63.443(e), or § 63.446(g), operation of the control device below minimum operating parameter values or above maximum operating parameter values established under this subpart or failure to perform procedures required by this subpart shall constitute a violation of the applicable emission standard of this subpart and be reported as a period of excess emissions.

(p) Each owner or operator of a biological treatment system complying with paragraph (j) of this section shall perform all the following requirements when the monitoring parameters specified in paragraphs (j)(1)(i) through (j)(1)(iii) of this section are below minimum operating parameter values or

above maximum operating parameter values established in paragraph (n) of this section.

(1) The following shall occur and be recorded as soon as practical:

(i) Determine compliance with § 63.446(e)(2) using the percent reduction test procedures specified in § 63.457(l) and the monitoring data specified in paragraph (j)(1) of this section that coincide with the time period of the parameter excursion;

(ii) Steps shall be taken to repair or adjust the operation of the process to end the parameter excursion period; and

(iii) Steps shall be taken to minimize total HAP emissions to the atmosphere during the parameter excursion period.

(2) A parameter excursion is not a violation of the applicable emission standard if the percent reduction test specified in paragraph (p)(1)(i) of this section demonstrates compliance with § 63.446(e)(2), and no maintenance or changes have been made to the process or control device after the beginning of a parameter excursion that would influence the results of the determination.

§ 63.454 Recordkeeping requirements.

(a) The owner or operator of each affected source subject to the requirements of this subpart shall comply with the recordkeeping requirements of § 63.10 of subpart A of this part, as shown in table 1, and the requirements specified in paragraphs (b) through (d) of this section for the monitoring parameters specified in § 63.453.

(b) For each applicable enclosure opening, closed-vent system, and closed collection system, the owner or operator shall prepare and maintain a site-specific inspection plan including a drawing or schematic of the components of applicable affected equipment and shall record the following information for each inspection:

(1) Date of inspection;

(2) The equipment type and identification;

(3) Results of negative pressure tests for enclosures;

(4) Results of leak detection tests;

(5) The nature of the defect or leak and the method of detection (i.e., visual inspection or instrument detection);

(6) The date the defect or leak was detected and the date of each attempt to repair the defect or leak;

(7) Repair methods applied in each attempt to repair the defect or leak;

(8) The reason for the delay if the defect or leak is not repaired within 15 days after discovery;

(9) The expected date of successful repair of the defect or leak if the repair is not completed within 15 days;

(10) The date of successful repair of the defect or leak;

(11) The position and duration of opening of bypass line valves and the condition of any valve seals; and

(12) The duration of the use of bypass valves on computer controlled valves.

(c) The owner or operator of a bleaching system complying with § 63.440(d)(3)(ii)(B) shall record the daily average chlorine and hypochlorite application rates, in kg of bleaching agent per megagram of ODP, of the bleaching system until the requirements specified in § 63.440(d)(3)(ii)(A) are met.

(d) The owner or operator shall record the CMS parameters specified in § 63.453 and meet the requirements specified in paragraph (a) of this section for any new affected process equipment or pulping process condensate stream that becomes subject to the standards in this subpart due to a process change or modification.

§ 63.455 Reporting requirements.

(a) Each owner or operator of a source subject to this subpart shall comply with the reporting requirements of subpart A of this part as specified in table 1 and all the following requirements in this section. The initial notification report specified under § 63.9(b)(2) of subpart A of this part shall be submitted by April 15, 1999.

(b) Each owner or operator of a kraft pulping system specified in § 63.440(d)(1) or a bleaching system specified in § 63.440(d)(3)(ii) shall submit, with the initial notification report specified under § 63.9(b)(2) of subpart A of this part and paragraph (a) of this section and update every two years thereafter, a non-binding control strategy report containing, at a minimum, the information specified in paragraphs (b)(1) through (b)(3) of this section in addition to the information required in § 63.9(b)(2) of subpart A of this part.

(1) A description of the emission controls or process modifications selected for compliance with the control requirements in this standard.

(2) A compliance schedule, including the dates by which each step toward compliance will be reached for each emission point or sets of emission points. At a minimum, the list of dates shall include:

(i) The date by which the major study(s) for determining the compliance strategy will be completed;

(ii) The date by which contracts for emission controls or process modifications will be awarded, or the date by which orders will be issued for the purchase of major components to accomplish emission controls or process changes;

(iii) The date by which on-site construction, installation of emission control equipment, or a process change is to be initiated;

(iv) The date by which on-site construction, installation of emissions control equipment, or a process change is to be completed;

(v) The date by which final compliance is to be achieved;

(vi) For compliance with paragraph § 63.440(d)(3)(ii), the tentative dates by which compliance with effluent limitation guidelines and standards intermediate pollutant load effluent reductions and as available, all the dates for the best available technology's milestones reported in the National Pollutant Discharge Elimination System authorized under section 402 of the Clean Water Act and for the best professional milestones in the Voluntary Advanced Technology Incentives Program under 40 CFR 430.24 (b)(2); and

(vii) The date by which the final compliance tests will be performed.

(3) Until compliance is achieved, revisions or updates shall be made to the control strategy report required by paragraph (b) of this section indicating the progress made towards completing the installation of the emission controls or process modifications during the 2-year period.

(c) The owner or operator of each bleaching system complying with § 63.440(d)(3)(ii)(B) shall certify in the report specified under § 63.10(e)(3) of subpart A of this part that the daily application rates of chlorine and hypochlorite for that bleaching system have not increased as specified in § 63.440(d)(3)(ii)(B) until the requirements of § 63.440(d)(3)(ii)(A) are met.

(d) The owner or operator shall meet the requirements specified in paragraph (a) of this section upon startup of any new affected process equipment or pulping process condensate stream that becomes subject to the standards of this subpart due to a process change or modification.

§ 63.456 [Reserved]

§ 63.457 Test methods and procedures.

(a) *Initial performance test.* An initial performance test is required for all emission sources subject to the limitations in §§ 63.443, 63.444, 63.445, 63.446, and 63.447, except those controlled by a combustion device that is designed and operated as specified in § 63.443(d)(3) or (d)(4).

(b) *Vent sampling port locations and gas stream properties.* For purposes of

selecting vent sampling port locations and determining vent gas stream properties, required in §§ 63.443, 63.444, 63.445, and 63.447, each owner or operator shall comply with the applicable procedures in paragraphs (b)(1) through (b)(6) of this section.

(1) Method 1 or 1A of part 60, appendix A, as appropriate, shall be used for selection of the sampling site as follows:

(i) To sample for vent gas concentrations and volumetric flow rates, the sampling site shall be located prior to dilution of the vent gas stream and prior to release to the atmosphere;

(ii) For determining compliance with percent reduction requirements, sampling sites shall be located prior to the inlet of the control device and at the outlet of the control device; measurements shall be performed simultaneously at the two sampling sites; and

(iii) For determining compliance with concentration limits or mass emission rate limits, the sampling site shall be located at the outlet of the control device.

(2) No traverse site selection method is needed for vents smaller than 0.10 meter (4.0 inches) in diameter.

(3) The vent gas volumetric flow rate shall be determined using Method 2, 2A, 2C, or 2D of part 60, appendix A, as appropriate.

(4) The moisture content of the vent gas shall be measured using Method 4 of part 60, appendix A.

(5) To determine vent gas concentrations, the owner or operator shall collect a minimum of three samples that are representative of normal conditions and average the resulting pollutant concentrations using the following procedures.

(i) Method 308 in Appendix A of this part shall be used to determine the methanol concentration.

(ii) Except for the modifications specified in paragraphs (b)(5)(ii)(A) through (b)(5)(ii)(K) of this section, Method 26A of part 60, appendix A shall be used to determine chlorine concentration in the vent stream.

(A) *Probe/Sampling Line.* A separate probe is not required. The sampling line shall be an appropriate length of 0.64 cm (0.25 in) OD Teflon® tubing. The sample inlet end of the sampling line shall be inserted into the stack in such a way as to not entrain liquid condensation from the vent gases. The other end shall be connected to the impingers. The length of the tubing may vary from one sampling site to another, but shall be as short as possible in each situation. If sampling is conducted in sunlight, opaque tubing shall be used. Alternatively, if transparent tubing is used, it shall be covered with opaque tape.

(B) *Impinger Train.* Three 30 milliliter (ml) capacity midget impingers shall be connected in series to the sampling line. The impingers shall have regular tapered stems. Silica gel shall be placed in the third impinger as a desiccant. All impinger train connectors shall be glass and/or Teflon®.

(C) *Critical Orifice.* The critical orifice shall have a flow rate of 200 to 250 ml/min and shall be followed by a vacuum pump capable of providing a vacuum of 640 millimeters of mercury (mm Hg). A 45 millimeter diameter in-line Teflon® 0.8 micrometer filter shall follow the impingers to project the critical orifice and vacuum pump.

(D) The following are necessary for the analysis apparatus:

(*1*) Wash bottle filled with deionized water;

(*2*) 25 or 50 ml graduated burette and stand;

(*3*) Magnetic stirring apparatus and stir bar;

(*4*) Calibrated pH Meter;

(*5*) 150–250 ml beaker or flask; and

(*6*) A 5 ml pipette.

(E) The procedures listed in paragraphs (b)(5)(ii)(E)(*1*) through (b)(5)(ii)(E)(*7*) of this section shall be used to prepare the reagents.

(*1*) To prepare the 1 molarity (M) potassium dihydrogen phosphate solution, dissolve 13.61 grams (g) of potassium dihydrogen phosphate in water and dilute to 100 ml.

(*2*) To prepare the 1 M sodium hydroxide solution (NaOH), dissolve 4.0 g of sodium hydroxide in water and dilute to 100 ml.

(*3*) To prepare the buffered 2 percent potassium iodide solution, dissolve 20 g of potassium iodide in 900 ml water. Add 50 ml of the 1 M potassium dihydrogen phosphate solution and 30 ml of the 1 M sodium hydroxide solution. While stirring solution, measure the pH of solution electrometrically and add the 1 M sodium hydroxide solution to bring pH to between 6.95 and 7.05.

(*4*) To prepare the 0.1 normality (N) sodium thiosulfate solution, dissolve 25 g of sodium thiosulfate, pentahydrate, in 800 ml of freshly boiled and cooled distilled water in a 1-liter volumetric flask. Dilute to volume. To prepare the 0.01 N sodium thiosulfate solution, add 10.0 ml standardized 0.1 N sodium thiosulfate solution to a 100 ml volumetric flask, and dilute to volume with water.

(*5*) To standardize the 0.1 N sodium thiosulfate solution, dissolve 3.249 g of anhydrous potassium bi-iodate, primary standard quality, or 3.567 g potassium iodate dried at 103 +/−2 degrees Centigrade for 1 hour, in distilled water and dilute to 1000 ml to yield a 0.1000 N solution. Store in a glass-stoppered bottle. To 80 ml distilled water, add, with constant stirring, 1 ml concentrated sulfuric acid, 10.00 ml 0.1000 N anhydrous potassium bi-iodate, and 1 g potassium iodide. Titrate immediately with 0.1 n sodium thiosulfate titrant until the yellow color of the liberated iodine is almost discharged. Add 1 ml starch indicator solution and continue titrating until the blue color disappears. The normality of the sodium thiosulfate solution is inversely proportional to the ml of sodium thiosulfate solution consumed:

$$\text{Normality of Sodium Thiosulfate} = \frac{1}{\text{ml Sodium Thiosulfate Consumed}}$$

(*6*) To prepare the starch indicator solution, add a small amount of cold water to 5 g starch and grind in a mortar to obtain a thin paste. Pour paste into 1 L of boiling distilled water, stir, and let settle overnight. Use clear supernate for starch indicator solution.

(*7*) To prepare the 10 percent sulfuric acid solution, add 10 ml of concentrated sulfuric acid to 80 ml water in an 100 ml volumetric flask. Dilute to volume.

(F) The procedures specified in paragraphs (b)(5)(ii)(F)(*1*) through (b)(5)(ii)(F)(*5*) of this section shall be used to perform the sampling.

(*1*) *Preparation of Collection Train.* Measure 20 ml buffered potassium iodide solution into each of the first two impingers and connect probe, impingers, filter, critical orifice, and pump. The sampling line and the impingers shall be shielded from sunlight.

(*2*) *Leak and Flow Check Procedure.* Plug sampling line inlet tip and turn on pump. If a flow of bubbles is visible in either of the liquid impingers, tighten fittings and adjust connections and

impingers. A leakage rate not in excess of 2 percent of the sampling rate is acceptable. Carefully remove the plug from the end of the probe. Check the flow rate at the probe inlet with a bubble tube flow meter. The flow should be comparable or slightly less than the flow rate of the critical orifice with the impingers off-line. Record the flow and turn off the pump.

(*3*) *Sample Collection.* Insert the sampling line into the stack and secure it with the tip slightly lower than the port height. Start the pump, recording the time. End the sampling after 60 minutes, or after yellow color is observed in the second in-line impinger. Record time and remove the tubing from the vent. Recheck flow rate at sampling line inlet and turn off pump. If the flow rate has changed significantly, redo sampling with fresh capture solution. A slight variation (less than 5 percent) in flow may be averaged. With the inlet end of the line elevated above the impingers, add about 5 ml water into the inlet tip to rinse the line into the first impinger.

(*4*) *Sample Analysis.* Fill the burette with 0.01 N sodium thiosulfate solution to the zero mark. Combine the contents of the impingers in the beaker or flask. Stir the solution and titrate with thiosulfate until the solution is colorless. Record the volume of the first endpoint (TN, ml). Add 5 ml of the 10 percent sulfuric acid solution, and continue the titration until the contents of the flask are again colorless. Record the total volume of titrant required to go through the first and to the second endpoint (TA, ml). If the volume of neutral titer is less than 0.5 ml, repeat the testing for a longer period of time. It is important that sufficient lighting be present to clearly see the endpoints, which are determined when the solution turns from pale yellow to colorless. A lighted stirring plate and a white background are useful for this purpose.

(*5*) *Interferences.* Known interfering agents of this method are sulfur dioxide and hydrogen peroxide. Sulfur dioxide, which is used to reduce oxidant residuals in some bleaching systems, reduces formed iodine to iodide in the capture solution. It is therefore a negative interference for chlorine, and in some cases could result in erroneous negative chlorine concentrations. Any agent capable of reducing iodine to iodide could interfere in this manner. A chromium trioxide impregnated filter will capture sulfur dioxide and pass chlorine and chlorine dioxide. Hydrogen peroxide, which is commonly used as a bleaching agent in modern bleaching systems, reacts with iodide to form iodine and thus can cause a positive interference in the chlorine measurement. Due to the chemistry involved, the precision of the chlorine analysis will decrease as the ratio of chlorine dioxide to chlorine increases. Slightly negative calculated concentrations of chlorine may occur when sampling a vent gas with high concentrations of chlorine dioxide and very low concentrations of chlorine.

(G) The following calculation shall be performed to determine the corrected sampling flow rate:

$$S_C = S_U\left(\frac{BP - PW}{760}\right)\left(\frac{293}{273 + t}\right)$$

Where:

S_C=Corrected (dry standard) sampling flow rate, liters per minute;
S_U=Uncorrected sampling flow rate, L/min;
BP=Barometric pressure at time of sampling;
PW=Saturated partial pressure of water vapor, mm Hg at temperature; and
t=Ambient temperature, °C.

(H) The following calculation shall be performed to determine the moles of chlorine in the sample:

$$Cl_2\text{Moles} = 1/8000\left(5\,T_N - T_A\right) \times N_{Thio}$$

Where:

T_N=Volume neutral titer, ml;
T_A=Volume acid titer (total), ml; and
N_{Thio}=Normality of sodium thiosulfate titrant.

(I) The following calculation shall be performed to determine the concentration of chlorine in the sample:

$$Cl_2\text{ppmv} = \frac{3005\left(5\,T_N - T_A\right) \times N_{Thio}}{S_C \times t_S}$$

Where:

S_C=Corrected (dry standard) sampling flow rate, liters per minute;
t_S=Time sampled, minutes;
T_N=Volume neutral titer, ml;
T_A=Volume acid titer (total), ml; and
N_{Thio}=Normality of sodium thiosulfate titrant.

(J) The following calculation shall be performed to determine the moles of chlorine dioxide in the sample:

$$C1O_2\ \text{Moles} = 1/4000\left(T_A - T_N\right) \times N_{Thio}$$

Where:

T_A=Volume acid titer (total), ml;
T_N=Volume neutral titer, ml; and
N_{Thio}=Normality of sodium thiosulfate titrant.

(K) The following calculation shall be performed to determine the concentration of chlorine dioxide in the sample:

$$C1O_2\ \text{ppmv} = \frac{6010\left(T_A - T_N\right) \times N_{Thio}}{S_C \times t_S}$$

Where:

S_C=Corrected (dry standard) sampling flow rate, liters per minute;
t_S=Time sampled, minutes;
T_A=Volume acid titer (total), ml;
T_N=Volume neutral titer, ml; and
N_{Thio}=Normality of sodium thiosulfate titrant.

(iii) Any other method that measures the total HAP or methanol concentration that has been demonstrated to the Administrator's satisfaction.

(6) The minimum sampling time for each of the three runs per method shall be 1 hour in which either an integrated sample or four grab samples shall be taken. If grab sampling is used, then the samples shall be taken at approximately equal intervals in time, such as 15 minute intervals during the run.

(c) *Liquid sampling locations and properties.* For purposes of selecting liquid sampling locations and for determining properties of liquid streams such as wastewaters, process waters, and condensates required in §§ 63.444, 63.446, and 63.447, the owner or operator shall comply with the following procedures:

(1) Samples shall be collected using the sampling procedures specified in Method 305 of part 60, appendix A;

(i) Where feasible, samples shall be taken from an enclosed pipe prior to the liquid stream being exposed to the atmosphere; and

(ii) When sampling from an enclosed pipe is not feasible, samples shall be collected in a manner to minimize exposure of the sample to the atmosphere and loss of HAP compounds prior to sampling.

(2) The volumetric flow rate of the entering and exiting liquid streams shall be determined using the inlet and outlet flow meters or other methods demonstrated to the Administrator's satisfaction. The volumetric flow rate measurements to determine actual mass removal shall be taken at the same time as the concentration measurements;

(3) To determine liquid stream total HAP or methanol concentrations, the owner or operator shall collect a minimum of three samples that are representative of normal conditions and average the resulting pollutant concentrations using one of the following:

(i) Method 305 in Appendix A of this part, adjusted using the following equation:

$$\overline{C} = \sum_{i=1}^{n} C_i / fm_i$$

Where:

$\overline{C}$=Pollutant concentration for the liquid stream, parts per million by weight.

C_i=Measured concentration of pollutant i in the liquid stream sample determined using Method 305, parts per million by weight.

fm_i=Pollutant-specific constant that adjusts concentration measured by Method 305 to actual liquid concentration; the fm for methanol is 0.85. Additional pollutant fm values can be found in table 34, subpart G of this part.

n=Number of individual pollutants, i, summed to calculate total HAP.

(ii) Any other method that measures total HAP concentration that has been demonstrated to the Administrator's satisfaction.

(4) To determine soluble BOD_5 in the effluent stream from a biological treatment unit used to comply with §§ 63.446(e)(2) and 63.453(j), the owner or operator shall use Method 405.1, of part 136, with the following modifications:

(i) Filter the sample through the filter paper, into Erlenmeyer flask by applying a vacuum to the flask sidearm. Minimize the time for which vacuum is applied to prevent stripping of volatile organics from the sample. Replace filter paper as often as needed in order to maintain filter times of less than approximately 30 seconds per filter paper. No rinsing of sample container or filter bowl into the Erlenmeyer flask is allowed.

(ii) Perform Method 405.1 on the filtrate obtained in paragraph (c)(4) of this section. Dilution water shall be seeded with 1 milliliter of final effluent per liter of dilution water. Dilution ratios may require adjustment to reflect the lower oxygen demand of the filtered sample in comparison to the total BOD_5. Three BOD bottles and different dilutions shall be used for each sample.

(d) *Detectable leak procedures.* To measure detectable leaks for closed-vent systems as specified in § 63.450 or for pulping process wastewater collection systems as specified in § 63.446(d)(2)(i), the owner or operator shall comply with the following:

(1) Method 21, of part 60, appendix A; and

(2) The instrument specified in Method 21 shall be calibrated before use according to the procedures specified in Method 21 on each day that leak checks are performed. The following calibration gases shall be used:

(i) Zero air (less than 10 parts per million by volume of hydrocarbon in air); and

(ii) A mixture of methane or n-hexane and air at a concentration of approximately, but less than, 10,000 parts per million by volume methane or n-hexane.

(e) *Negative pressure procedures.* To demonstrate negative pressure at process equipment enclosure openings as specified in § 63.450(b), the owner or operator shall use one of the following procedures:

(1) An anemometer to demonstrate flow into the enclosure opening;

(2) Measure the static pressure across the opening;

(3) Smoke tubes to demonstrate flow into the enclosure opening; or

(4) Any other industrial ventilation test method demonstrated to the Administrator's satisfaction.

(f) *HAP concentration measurements.* For purposes of complying with the requirements in §§ 63.443, 63.444, and 63.447, the owner or operator shall measure the total HAP concentration as one of the following:

(1) As the sum of all individual HAP's; or

(2) As methanol.

(g) *Condensate HAP concentration measurement.* For purposes of complying with the kraft pulping condensate requirements in § 63.446, the owner or operator shall measure the total HAP concentration as methanol except for the purposes of complying with the initial performance test specified in § 63.457(a) for § 63.446(e)(2) and as specified in § 63.453(j)(2)(ii).

(h) *Bleaching HAP concentration measurement.* For purposes of complying with the bleaching system requirements in § 63.445, the owner or operator shall measure the total HAP concentration as the sum of all individual chlorinated HAP's or as chlorine.

(i) *Vent gas stream calculations.* To demonstrate compliance with the mass emission rate, mass emission rate per megagram of ODP, and percent reduction requirements for vent gas streams specified in §§ 63.443, 63.444, 63.445, and 63.447, the owner or operator shall use the following:

(1) The total HAP mass emission rate shall be calculated using the following equation:

$$E = K_2\left[\sum_{j=1}^{n} C_j M_j\right] Q_s$$

Where:

E=Mass emission rate of total HAP from the sampled vent, kilograms per hour.

K_2=Constant, 2.494×10^{-6} (parts per million by volume)$^{-1}$ (gram-mole per standard cubic meter) (kilogram/gram) (minutes/hour), where standard temperature for (gram-mole per standard cubic meter) is 20 °C.

C_j=Concentration on a dry basis of pollutant j in parts per million by volume as measured by the test methods specified in paragraph (b) of this section.

M_j=Molecular weight of pollutant j, gram/gram-mole.

Q_s=Vent gas stream flow rate (dry standard cubic meter per minute) at a temperature of 20 °C as indicated in paragraph (b) of this section.

n=Number of individual pollutants, i, summed to calculate total HAP.

(2) The total HAP mass emission rate per megagram of ODP shall be calculated using the following equation:

$$F = \frac{E}{P}$$

Where:

F=Mass emission rate of total HAP from the sampled vent, in kilograms per megagram of ODP.

E=Mass emission rate of total HAP from the sampled vent, in kilograms per hour determined as specified in paragraph (i)(1) of this section.

P=The production rate of pulp during the sampling period, in megagrams of ODP per hour.

(3) The total HAP percent reduction shall be calculated using the following equation:

$$R = \frac{E_i - E_O}{E_i}(100)$$

Where:

R=Efficiency of control device, percent.

Ei=Inlet mass emission rate of total HAP from the sampled vent, in kilograms of pollutant per hour, determined as specified in paragraph (i)(1) of this section.

E_o=Outlet mass emission rate of total HAP from the sampled vent, in kilograms of pollutant per hour, determined as specified in paragraph (i)(1) of this section.

(j) *Liquid stream calculations.* To demonstrate compliance with the mass flow rate, mass per megagram of ODP, and percent reduction requirements for liquid streams specified in § 63.446, the owner or operator shall use the following:

(1) The mass flow rates of total HAP or methanol entering and exiting the treatment process shall be calculated using the following equations:

$$E_b = \frac{K}{n\times10^6}\left(\sum_{i=1}^{n} V_{bi}C_{bi}\right)$$

$$E_a = \frac{K}{n\times10^6}\left(\sum_{i=1}^{n} V_{ai}C_{ai}\right)$$

Where:

E_b=Mass flow rate of total HAP or methanol in the liquid stream entering the treatment process, kilograms per hour.

E_a=Mass flow rate of total HAP or methanol in the liquid exiting the treatment process, kilograms per hour.

K=Density of the liquid stream, kilograms per cubic meter.

V_{bi}=Volumetric flow rate of liquid stream entering the treatment process during each run i, cubic meters per hour, determined as specified in paragraph (c) of this section.

V_{ai}=Volumetric flow rate of liquid stream exiting the treatment process during each run i, cubic meters per hour, determined as specified in paragraph (c) of this section.

C_{bi}=Concentration of total HAP or methanol in the stream entering the treatment process during each run i, parts per million by weight, determined as specified in paragraph (c) of this section.

C_{ai}=Concentration of total HAP or methanol in the stream exiting the treatment process during each run i, parts per million by weight, determined as specified in paragraph (c) of this section.

n=Number of runs.

(2) The mass of total HAP or methanol per megagram ODP shall be calculated using the following equation:

$$F = \frac{E_a}{P}$$

Where:

F=Mass loading of total HAP or methanol in the sample, in kilograms per megagram of ODP.

E_a=Mass flow rate of total HAP or methanol in the wastewater stream in kilograms per hour as determined using the procedures in paragraph (j)(1) of this section.

P=The production rate of pulp during the sampling period in megagrams of ODP per hour.

(3) The percent reduction of total HAP across the applicable treatment process shall be calculated using the following equation:

$$R = \frac{E_b - E_a}{E_b} \times 100$$

Where:

R=Control efficiency of the treatment process, percent.

E_b=Mass flow rate of total HAP in the stream entering the treatment process, kilograms per hour, as determined in paragraph (j)(1) of this section.

E_a=Mass flow rate of total HAP in the stream exiting the treatment process, kilograms per hour, as determined in paragraph (j)(1) of this section.

(4) Compounds that meet the requirements specified in paragraphs (j)(4)(i) or (4)(ii) of this section are not required to be included in the mass flow rate, mass per megagram of ODP, or the mass percent reduction determinations.

(i) Compounds with concentrations at the point of determination that are below 1 part per million by weight; or

(ii) Compounds with concentrations at the point of determination that are below the lower detection limit where the lower detection limit is greater than 1 part per million by weight.

(k) *Oxygen concentration correction procedures.* To demonstrate compliance with the total HAP concentration limit of 20 ppmv in § 63.443(d)(2), the concentration measured using the methods specified in paragraph (b)(5) of this section shall be corrected to 10 percent oxygen using the following procedures:

(1) The emission rate correction factor and excess air integrated sampling and analysis procedures of Methods 3A or 3B of part 60, appendix A shall be used to determine the oxygen concentration. The samples shall be taken at the same time that the HAP samples are taken.

(2) The concentration corrected to 10 percent oxygen shall be computed using the following equation:

$$C_c = C_m \left(\frac{10.9}{20.9 - \%O_{2d}} \right)$$

Where:

C_c=Concentration of total HAP corrected to 10 percent oxygen, dry basis, parts per million by volume.

C_m=Concentration of total HAP dry basis, parts per million by volume, as specified in paragraph (b) of this section.

$\%0_{2d}$=Concentration of oxygen, dry basis, percent by volume.

(1) *Biological treatment system percent reduction calculation.* To determine compliance with an open biological treatment system option specified in § 63.446(e)(2) and the monitoring requirements specified in § 63.453(j)(2), the percent reduction due to destruction in the biological treatment system shall be calculated using the following equation:

$R=f_{bio}\times 100$

Where:

R=Destruction of total HAP or methanol in the biological treatment process, percent.

f_{bio}=The fraction of total HAP or methanol removed in the biological treatment system. The site-specific biorate constants shall be determined using the procedures specified and as limited in appendix C of part 63.

(m) *Condensate segregation procedures.* The following procedures shall be used to demonstrate compliance with the condensate segregation requirements specified in § 63.446(c).

(1) To demonstrate compliance with the percent mass requirements specified in § 63.446(c)(1), the procedures specified in paragraphs (m)(1)(i) through (m)(1)(iii) of this section shall be performed.

(i) Determine the total HAP mass of all condensates from each equipment system listed in § 63.446 (b)(1) through (b)(3) using the procedures specified in paragraphs (c) and (j) of this section.

(ii) Multiply the total HAP mass determine in paragraph (m)(1)(i) of this section by 0.65 to determine the target HAP mass for the high-HAP fraction condensate stream or streams.

(iii) Compliance with the segregation requirements specified in § 63.446(c)(1) is demonstrated if the condensate stream or streams from each equipment system listed in § 63.446 (b)(1) through (b)(3) being treated as specified in § 63.446(e) contain at least as much total HAP mass as the target total HAP mass determined in paragraph (m)(1)(ii) of this section.

(2) To demonstrate compliance with the percent mass requirements specified in § 63.446(c)(2), the procedures specified in paragraphs (m)(2)(i) through (m)(2)(ii) of this section shall be performed.

(i) Determine the total HAP mass contained in the high-HAP fraction condensates from each equipment system listed in § 63.446(b)(1) through (b)(3) and the total condensates streams from the equipment systems listed in § 63.446(b)(4) and (b)(5), using the procedures specified in paragraphs (c) and (j) of this section.

(ii) Compliance with the segregation requirements specified in § 63.446(c)(2) is demonstrated if the total HAP mass determined in paragraph (m)(2)(i) of this section is equal to or greater than the appropriate mass requirements specified in § 63.446(c)(2).

(n) *Biological treatment system monitoring sampling storage.* The inlet and outlet grab samples required to be collected in § 63.453(j)(2) shall be stored at 4° C (40° F) to minimize the biodegradation of the organic compounds in the samples.

§ 63.458 Delegation of authority.

(a) In delegating implementation and enforcement authority to a State under section 112(d) of the CAA, the authorities contained in paragraph (b) of this section shall be retained by the Administrator and not transferred to a State.

(b) Authorities which will not be delegated to States:

(1) Section 63.6(g)—Use of an alternative nonopacity emission standard;

(2) Section 63.453(m)—Use of an alternative monitoring parameter;

(3) Section 63.457(b)(5)(iii)—Use of an alternative test method for total HAP or methanol in vents; and

(4) Section 63.457(c)(3)(ii)—Use of an alternative test method for total HAP or methanol in wastewater.

§ 63.459 [Reserved]

TABLE 1 TO SUBPART S—GENERAL PROVISIONS APPLICABILITY TO SUBPART S [a]

Reference	Applies to Subpart S	Comment
63.1(a)(1)–(3)	Yes.	
63.1(a)(4)	Yes	Subpart S (this table) specifies applicability of each paragraph in subpart A to subpart S.
63.1(a)(5)	No	Section reserved.
63.1(a)(6)–(8)	Yes.	
63.1(a)(9)	No	Section reserved.
63.1(a)(10)	No	Subpart S and other cross-referenced subparts specify calendar or operating day.
63.1(a)(11)–(14)	Yes.	
63.1(b)(1)	No	Subpart S specifies its own applicability.
63.1(b)(2)–(3)	Yes.	
63.1(c)(1)–(2)	Yes.	
63.1(c)(3)	No	Section reserved.
63.1(c)(4)–(5)	Yes.	
63.1(d)	No	Section reserved.
63.1(e)	Yes.	
63.2	Yes.	
63.3	Yes.	
63.4(a)(1)	Yes.	
63.4(a)(3).		
63.4(a)(4)	No	Section reserved.
63.4(a)(5)	Yes.	
63.4(b)	Yes.	
63.4(c)	Yes.	
63.5(a)	Yes.	
63.5(b)(1)	Yes.	
63.5(b)(2)	No	Section reserved.
63.5(b)(3)	Yes.	
63.5(b)(4)–(6)	Yes.	
63.5(c)	No	Section reserved.
63.5(d)	Yes.	
63.5(e)	Yes.	
63.5(f)	Yes.	
63.6(a)	Yes.	
63.6(b)	No	Subpart S specifies compliance dates for sources subject to subpart S.
63.6(c)	No	Subpart S specifies compliance dates for sources subject to subpart S.
63.6(d)	No	Section reserved.
63.6(e)	Yes.	
63.6(f)	Yes.	
63.6(g)	Yes.	
63.6(h)	No	Pertains to continuous opacity monitors that are not part of this standard.
63.6(i)	Yes.	
63.6(j)	Yes.	
63.7	Yes.	
63.8(a)(1)	Yes.	
63.8(a)(2)	Yes.	
63.8(a)(3)	No	Section reserved.
63.8(a)(4)	Yes.	
63.8(b)(1)	Yes.	
63.8(b)(2)	No	Subpart S specifies locations to conduct monitoring.
63.8(b)(3)	Yes.	
63.8(c)(1)	Yes.	
63.8(c)(2)	Yes.	
63.8(c)(3)	Yes.	
63.8(c)(4)	No	Subpart S allows site specific determination of monitoring frequency in § 63.453(n)(4).
63.8(c)(5)	No	Pertains to continuous opacity monitors that are not part of this standard.
63.8(c)(6)	Yes.	
63.8(c)(7)	Yes.	
63.8(c)(8)	Yes.	
63.8(d)	Yes.	
63.8(e)	Yes.	
63.8(f)(1)–(5)	Yes.	
63.8(f)(6)	No	Subpart S does not specify relative accuracy test for CEM's.
63.8(g)	Yes.	
63.9(a)	Yes.	
63.9(b)	Yes	Initial notifications must be submitted within one year after the source becomes subject to the relevant standard.
63.9(c)	Yes.	
63.9(d)	No	Special compliance requirements are only applicable to kraft mills.
63.9(e)	Yes.	
63.9(f)	No	Pertains to continuous opacity monitors that are not part of this standard.

TABLE 1 TO SUBPART S—GENERAL PROVISIONS APPLICABILITY TO SUBPART S [a]—Continued

Reference	Applies to Subpart S	Comment
63.9(g)(1)	Yes.	
63.9(g)(2)	No	Pertains to continuous opacity monitors that are not part of this standard.
63.9(g)(3)	No	Subpart S does not specify relative accuracy tests, therefore no notification is required for an alternative.
63.9(h)	Yes.	
63.9(i)	Yes.	
63.9(j)	Yes.	
63.10(a)	Yes.	
63.10(b)	Yes.	
63.10(c)	Yes.	
63.10(d)(1)	Yes.	
63.10(d)(2)	Yes.	
63.10(d)(3)	No	Pertains to continuous opacity monitors that are not part of this standard.
63.10(d)(4)	Yes.	
63.10(d)(5)	Yes.	
63.10(e)(1)	Yes.	
63.10(e)(2)(i)	Yes.	
63.10(e)(2)(ii)	No	Pertains to continuous opacity monitors that are not part of this standard.
63.10(e)(3)	Yes.	
63.10(e)(4)	No	Pertains to continuous opacity monitors that are not part of this standard.
63.10(f)	Yes.	
63.11–63.15	Yes.	

[a] Wherever subpart A specifies ''postmark'' dates, submittals may be sent by methods other than the U.S. Mail (e.g., by fax or courier). Submittals shall be sent by the specified dates, but a postmark is not required.

3. Appendix A of part 63 is amended by adding Method 308 in numerical order to read as follows:

Appendix A to Part 63—Test Methods

* * * * *

Method 308—Procedure for Determination of Methanol Emission From Stationary Sources

1.0 Scope and Application

1.1 Analyte. Methanol. Chemical Abstract Service (CAS) No. 67–56–1.

1.2 Applicability. This method applies to the measurement of methanol emissions from specified stationary sources.

2.0 Summary of Method

A gas sample is extracted from the sampling point in the stack. The methanol is collected in deionized distilled water and adsorbed on silica gel. The sample is returned to the laboratory where the methanol in the water fraction is separated from other organic compounds with a gas chromatograph (GC) and is then measured by a flame ionization detector (FID). The fraction adsorbed on silica gel is extracted with an aqueous solution of n-propanol and is then separated and measured by GC/FID.

3.0 Definitions [Reserved]

4.0 Interferences [Reserved]

5.0 Safety

5.1 Disclaimer. This method may involve hazardous materials, operations, and equipment. This test method does not purport to address all of the safety problems associated with its use. It is the responsibility of the user of this test method to establish appropriate safety and health practices and to determine the applicability of regulatory limitations before performing this test method.

5.2 Methanol Characteristics. Methanol is flammable and a dangerous fire and explosion risk. It is moderately toxic by ingestion and inhalation.

6.0 Equipment and Supplies

6.1 Sample Collection. The following items are required for sample collection:

6.1.1 Sampling Train. The sampling train is shown in Figure 308–1 and component parts are discussed below.

6.1.1.1 Probe. Teflon®, approximately 6-millimeter (mm) (0.24 inch) outside diameter.

6.1.1.2 Impinger. A 30-milliliter (ml) midget impinger. The impinger must be connected with leak-free glass connectors. Silicone grease may not be used to lubricate the connectors.

6.1.1.3 Adsorbent Tube. Glass tubes packed with the required amount of the specified adsorbent.

6.1.1.4 Valve. Needle valve, to regulate sample gas flow rate.

6.1.1.5 Pump. Leak-free diaphragm pump, or equivalent, to pull gas through the sampling train. Install a small surge tank between the pump and rate meter to eliminate the pulsation effect of the diaphragm pump on the rotameter.

6.1.1.6 Rate Meter. Rotameter, or equivalent, capable of measuring flow rate to within 2 percent of the selected flow rate of up to 1000 milliliter per minute (ml/min). Alternatively, the tester may use a critical orifice to set the flow rate.

6.1.1.7 Volume Meter. Dry gas meter (DGM), sufficiently accurate to measure the sample volume to within 2 percent, calibrated at the selected flow rate and conditions actually encountered during sampling, and equipped with a temperature sensor (dial thermometer, or equivalent) capable of measuring temperature accurately to within 3 °C (5.4 °F).

6.1.1.8 Barometer. Mercury (Hg), aneroid, or other barometer capable of measuring atmospheric pressure to within 2.5 mm (0.1 inch) Hg. See the NOTE in Method 5 (40 CFR part 60, appendix A), section 6.1.2.

6.1.1.9 Vacuum Gauge and Rotameter. At least 760-mm (30-inch) Hg gauge and 0- to 40-ml/min rotameter, to be used for leak-check of the sampling train.

6.2 Sample Recovery. The following items are required for sample recovery:

6.2.1 Wash Bottles. Polyethylene or glass, 500-ml, two.

6.2.2 Sample Vials. Glass, 40-ml, with Teflon®-lined septa, to store impinger samples (one per sample).

6.2.3 Graduated Cylinder. 100-ml size.

6.3 Analysis. The following are required for analysis:

6.3.1 Gas Chromatograph. GC with an FID, programmable temperature control, and heated liquid injection port.

6.3.2 Pump. Capable of pumping 100 ml/min. For flushing sample loop.

6.3.3 Flow Meter. To monitor accurately sample loop flow rate of 100 ml/min.

6.3.4 Regulators. Two-stage regulators used on gas cylinders for GC and for cylinder standards.

6.3.5 Recorder. To record, integrate, and store chromatograms.

6.3.6 Syringes. 1.0- and 10-microliter (l) size, calibrated, for injecting samples.

6.3.7 Tubing Fittings. Stainless steel, to plumb GC and gas cylinders.

6.3.8 Vials. Two 5.0-ml glass vials with screw caps fitted with Teflon®-lined septa for each sample.

6.3.9 Pipettes. Volumetric type, assorted sizes for preparing calibration standards.

6.3.10 Volumetric Flasks. Assorted sizes for preparing calibration standards.

6.3.11 Vials. Glass 40-ml with Teflon®-lined septa, to store calibration standards (one per standard).

7.0 Reagents and Standards

Note: Unless otherwise indicated, all reagents must conform to the specifications established by the Committee on Analytical Reagents of the American Chemical Society. Where such specifications are not available, use the best available grade.

7.1 Sampling. The following are required for sampling:

7.1.1 Water. Deionized distilled to conform to the American Society for Testing and Materials (ASTM) Specification D 1193–77, Type 3. At the option of the analyst, the potassium permanganate ($KMnO_4$) test for oxidizable organic matter may be omitted when high concentrations of organic matter are not expected to be present.

7.1.2 Silica Gel. Deactivated chromatographic grade 20/40 mesh silica gel packed in glass adsorbent tubes. The silica gel is packed in two sections. The front section contains 520 milligrams (mg) of silica gel, and the back section contains 260 mg.

7.2 Analysis. The following are required for analysis:

7.2.1 Water. Same as specified in section 7.1.1.

7.2.2 n-Propanol, 3 Percent. Mix 3 ml of n-propanol with 97 ml of water.

7.2.3 Methanol Stock Standard. Prepare a methanol stock standard by weighing 1 gram of methanol into a 100-ml volumetric flask. Dilute to 100 ml with water.

7.2.3.1 Methanol Working Standard. Prepare a methanol working standard by pipetting 1 ml of the methanol stock standard into a 100-ml volumetric flask. Dilute the solution to 100 ml with water.

7.2.3.2 Methanol Standards For Impinger Samples. Prepare a series of methanol standards by pipetting 1, 2, 5, 10, and 25 ml of methanol working standard solution respectively into five 50-ml volumetric flasks. Dilute the solutions to 50 ml with water. These standards will have 2, 4, 10, 20, and 50 µg/ml of methanol, respectively. After preparation, transfer the solutions to 40-ml glass vials capped with Teflon® septa and store the vials under refrigeration. Discard any excess solution.

7.2.3.3 Methanol Standards for Adsorbent Tube Samples. Prepare a series of methanol standards by first pipetting 10 ml of the methanol working standard into a 100-ml volumetric flask and diluting the contents to exactly 100 ml with 3 percent n-propanol solution. This standard will contain 10 µg/ml of methanol. Pipette 5, 15, and 25 ml of this standard, respectively, into four 50-ml volumetric flasks. Dilute each solution to 50 ml with 3 percent n-propanol solution. These standards will have 1, 3, and 5 µg/ml of methanol, respectively. Transfer all four standards into 40-ml glass vials capped with Teflon®-lined septa and store under refrigeration. Discard any excess solution.

7.2.4 GC Column. Capillary column, 30 meters (100 feet) long with an inside diameter (ID) of 0.53 mm (0.02 inch), coated with DB 624 to a film thickness of 3.0 micrometers, (µm) or an equivalent column. Alternatively, a 30-meter capillary column coated with polyethylene glycol to a film thickness of 1 µm such as AT–WAX or its equivalent.

7.2.5 Helium. Ultra high purity.

7.2.6 Hydrogen. Zero grade.

7.2.7 Oxygen. Zero grade.

8.0 Procedure

8.1 Sampling. The following items are required for sampling:

8.1.1 Preparation of Collection Train. Measure 20 ml of water into the midget impinger. The adsorbent tube must contain 520 mg of silica gel in the front section and 260 mg of silica gel in the backup section. Assemble the train as shown in Figure 308–1. An optional, second impinger that is left empty may be placed in front of the water-containing impinger to act as a condensate trap. Place crushed ice and water around the impinger.

BILLING CODE 6560–50–P

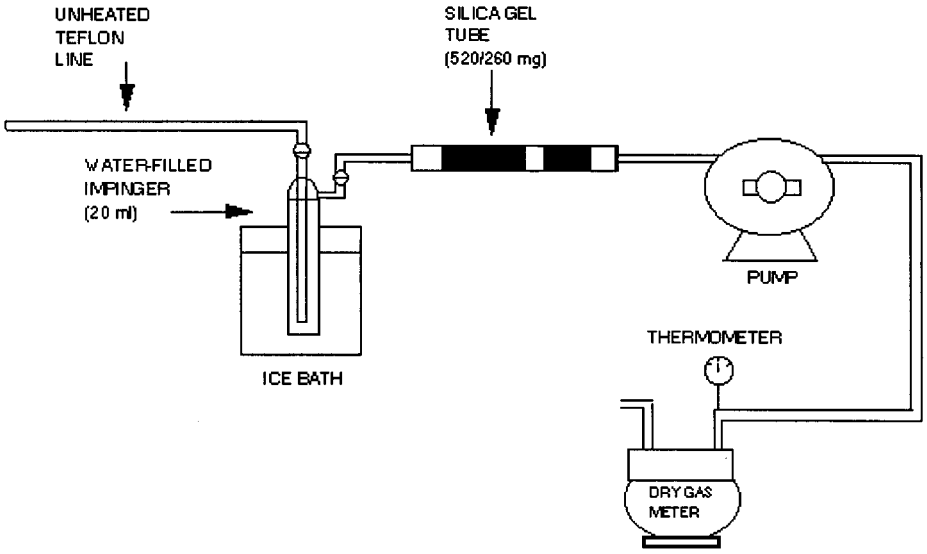

Figure 308.1. Sampling train schematic

BILLING CODE 6560–50–C

8.1.2 Leak Check. A leak check prior to the sampling run is optional; however, a leak check after the sampling run is mandatory. The leak-check procedure is as follows:

Temporarily attach a suitable (e.g., 0- to 40-ml/min) rotameter to the outlet of the DGM, and place a vacuum gauge at or near the probe inlet. Plug the probe inlet, pull a vacuum of at least 250 mm (10 inch) Hg, and note the flow rate as indicated by the rotameter. A leakage rate not in excess of 2 percent of the average sampling rate is acceptable.

Note: Carefully release the probe inlet plug before turning off the pump.

8.1.3 Sample Collection. Record the initial DGM reading and barometric pressure. To begin sampling, position the tip of the Teflon® tubing at the sampling point, connect the tubing to the impinger, and start the pump. Adjust the sample flow to a constant rate between 200 and 1000 ml/min as indicated by the rotameter. Maintain this constant rate (±10 percent) during the entire sampling run. Take readings (DGM, temperatures at DGM and at impinger outlet, and rate meter) at least every 5 minutes. Add more ice during the run to keep the temperature of the gases leaving the last impinger at 20 °C (68 °F) or less. At the conclusion of each run, turn off the pump, remove the Teflon® tubing from the stack, and record the final readings. Conduct a leak check as in section 8.1.2. (This leak check is mandatory.) If a leak is found, void the test run or use procedures acceptable to the Administrator to adjust the sample volume for the leakage.

8.2 Sample Recovery. The following items are required for sample recovery:

8.2.1 Impinger. Disconnect the impinger. Pour the contents of the midget impinger into a graduated cylinder. Rinse the midget impinger and the connecting tubes with water, and add the rinses to the graduated cylinder. Record the sample volume. Transfer the sample to a glass vial and cap with a Teflon® septum. Discard any excess sample. Place the samples in an ice chest for shipment to the laboratory.

8.2.2. Adsorbent Tubes. Seal the silica gel adsorbent tubes and place them in an ice chest for shipment to the laboratory.

9.0 Quality Control

9.1 Miscellaneous Quality Control Measures. The following quality control measures are required:

Section	Quality control measure	Effect
8.1.2, 8.1.3, 10.1.	Sampling equipment leak check and calibration.	Ensures accurate measurement of sample volume.
10.2	GC calibration ..	Ensures precision of GC analysis.

9.2 Applicability. When the method is used to analyze samples to demonstrate compliance with a source emission regulation, an audit sample must be analyzed, subject to availability.

9.3 Audit Procedure. Analyze an audit sample with each set of compliance samples. Concurrently analyze the audit sample and a set of compliance samples in the same manner to evaluate the technique of the analyst and the standards preparation. The same analyst, analytical reagents, and analytical system shall be used both for the compliance samples and the EPA audit sample.

9.4 Audit Sample Availability. Audit samples will be supplied only to enforcement agencies for compliance tests. Audit samples may be obtained by writing: Source Test Audit Coordinator (MD–77B), Air Measurement Research Division, National Exposure Research Laboratory, U.S. Environmental Protection Agency, Research Triangle Park, NC 27711; or by calling the Source Test Audit Coordinator (STAC) at (919) 541–7834. The audit sample request must be made at least 30 days prior to the scheduled compliance sample analysis.

9.5 Audit Results. Calculate the audit sample concentration according to the calculation procedure provided in the audit instructions included with the audit sample. Fill in the audit sample concentration and the analyst's name on the audit response form included with the audit instructions. Send one copy to the EPA Regional Office or the appropriate enforcement agency and a second copy to the STAC. The EPA Regional office or the appropriate enforcement agency will report the results of the audit to the laboratory being audited. Include this response with the results of the compliance samples in relevant reports to the EPA Regional Office or the appropriate enforcement agency.

10.0 Calibration and Standardization

10.1 Metering System. The following items are required for the metering system:

10.1.1 Initial Calibration.

10.1.1.1 Before its initial use in the field, first leak-check the metering system (drying tube, needle valve, pump, rotameter, and DGM) as follows: Place a vacuum gauge at the inlet to the drying tube, and pull a vacuum of 250 mm (10 inch) Hg; plug or pinch off the outlet of the flow meter, and then turn off the pump. The vacuum shall remain stable for at least 30 seconds. Carefully release the vacuum gauge before releasing the flow meter end.

10.1.1.2 Next, remove the drying tube, and calibrate the metering system (at the sampling flow rate specified by the method) as follows: Connect an appropriately sized wet test meter (e.g., 1 liter per revolution (0.035 cubic feet per revolution)) to the inlet of the drying tube. Make three independent calibrations runs, using at least five revolutions of the DGM per run. Calculate the calibration factor, Y (wet test meter calibration volume divided by the DGM volume, both volumes adjusted to the same reference temperature and pressure), for each run, and average the results. If any Y-value deviates by more than 2 percent from the average, the metering system is unacceptable for use. Otherwise, use the average as the calibration factor for subsequent test runs.

10.1.2 Posttest Calibration Check. After each field test series, conduct a calibration check as in section 10.1.1 above, except for the following variations: (a) The leak check is not to be conducted, (b) three, or more revolutions of the DGM may be used, and (c) only two independent runs need be made. If the calibration factor does not deviate by more than 5 percent from the initial calibration factor (determined in section 10.1.1), then the DGM volumes obtained during the test series are acceptable. If the calibration factor deviates by more than 5 percent, recalibrate the metering system as in section 10.1.1, and for the calculations, use the calibration factor (initial or recalibration) that yields the lower gas volume for each test run.

10.1.3 Temperature Sensors. Calibrate against mercury-in-glass thermometers.

10.1.4 Rotameter. The rotameter need not be calibrated, but should be cleaned and maintained according to the manufacturer's instruction.

10.1.5 Barometer. Calibrate against a mercury barometer.

10.2 Gas Chromatograph. The following procedures are required for the gas chromatograph:

10.2.1 Initial Calibration. Inject 1 µl of each of the standards prepared in sections 7.2.3.3 and 7.2.3.4 into the GC and record the response. Repeat the injections for each standard until two successive injections agree within 5 percent. Using the mean response for

each calibration standard, prepare a linear least squares equation relating the response to the mass of methanol in the sample. Perform the calibration before analyzing each set of samples.

10.2.2 Continuing Calibration. At the beginning of each day, analyze the mid level calibration standard as described in section 10.5.1. The response from the daily analysis must agree with the response from the initial calibration within 10 percent. If it does not, the initial calibration must be repeated.

11.0 Analytical Procedure

11.1 Gas Chromatograph Operating Conditions. The following operating conditions are required for the GC:

11.1.1 Injector. Configured for capillary column, splitless, 200 °C (392 °F).

11.1.2 Carrier. Helium at 10 ml/min.

11.1.3 Oven. Initially at 45 °C for 3 minutes; then raise by 10 °C to 70 °C; then raise by 70 °C/min to 200 °C.

11.2 Impinger Sample. Inject 1 µl of the stored sample into the GC. Repeat the injection and average the results. If the sample response is above that of the highest calibration standard, either dilute the sample until it is in the measurement range of the calibration line or prepare additional calibration standards. If the sample response is below that of the lowest calibration standard, prepare additional calibration standards. If additional calibration standards are prepared, there shall be at least two that bracket the response of the sample. These standards should produce approximately 50 percent and 150 percent of the response of the sample.

11.3 Silica Gel Adsorbent Sample. The following items are required for the silica gel adsorbent samples:

11.3.1 Preparation of Samples. Extract the front and backup sections of the adsorbent tube separately. With a file, score the glass adsorbent tube in front of the first section of silica gel. Break the tube open. Remove and discard the glass wool. Transfer the first section of the silica gel to a 5-ml glass vial and stopper the vial. Remove the spacer between the first and second section of the adsorbent tube and discard it. Transfer the second section of silica gel to a separate 5-ml glass vial and stopper the vial.

11.3.2 Desorption of Samples. Add 3 ml of the 10 percent n-propanol solution to each of the stoppered vials and shake or vibrate the vials for 30 minutes.

11.3.3 Inject a 1-µl aliquot of the diluted sample from each vial into the GC. Repeat the injection and average the results. If the sample response is above that of the highest calibration standard, either dilute the sample until it is in the measurement range of the calibration line or prepare additional calibration standards. If the sample response is below that of the lowest calibration standard, prepare additional calibration standards. If additional calibration standards are prepared, there shall be at least two that bracket the response of the sample. These standards should produce approximately 50 percent and 150 percent of the response of the sample.

12.0 Data Analysis and Calculations

12.1 Nomenclature.

C_{af}=Concentration of methanol in the front of the adsorbent tube, µg/ml.

C_{ab}=Concentration of methanol in the back of the adsorbent tube, µg/ml.

C_i=Concentration of methanol in the impinger portion of the sample train, µg/ml.

E=Mass emission rate of methanol, µg/hr (lb/hr).

M_{tot}=Total mass of methanol collected in the sample train, µg.

P_{bar}=Barometric pressure at the exit orifice of the DGM, mm Hg (in. Hg).

P_{std}=Standard absolute pressure, 760 mm Hg (29.92 in. Hg).

Q_{std}=Dry volumetric stack gas flow rate corrected to standard conditions, dscm/hr (dscf/hr).

T_m=Average DGM absolute temperature, degrees K (°R).

T_{std}=Standard absolute temperature, 293 degrees K (528 °R).

V_{af}=Volume of front half adsorbent sample, ml.

V_{ab}=Volume of back half adsorbent sample, ml.

V_i=Volume of impinger sample, ml.

V_m=Dry gas volume as measured by the DGM, dry cubic meters (dcm), dry cubic feet (dcf).

$V_{m(std)}$=Dry gas volume measured by the DGM, corrected to standard conditions, dry standard cubic meters (dscm), dry standard cubic feet (dscf).

12.2 Mass of Methanol. Calculate the total mass of methanol collected in the sampling train using Equation 308–1.

$$M_{tot} = V_i C_i + V_{af} C_{af} + V_{ab} C_{ab} \qquad \text{Equation 308-1}$$

12.3 Dry Sample Gas Volume, Corrected to Standard Conditions. Calculate the volume of gas sampled at standard conditions using Equation 308–2.

$$V_m(std) = \frac{V_m Y T_{std} P_{bar}}{T_m P_{std}} \qquad \text{Equation 308-2}$$

12.4 Mass Emission Rate of Methanol. Calculate the mass emission rate of methanol using Equation 308–3.

$$E = \frac{M_{tot} Q_{sd}}{V_{m(std)}} \qquad \text{Equation 308-3}$$

13.0 Method Performance [Reserved]

14.0 Pollution Prevention [Reserved]

15.0 Waste Management [Reserved]

16.0 Bibliography

1. Rom, J.J. ''Maintenance, Calibration, and Operation of Isokinetic Source Sampling Equipment.'' Office of Air Programs, Environmental Protection Agency. Research Triangle Park, NC. APTD–0576 March 1972.

2. Annual Book of ASTM Standards. Part 31; Water, Atmospheric Analysis. American Society for Testing and Materials. Philadelphia, PA. 1974. pp. 40–42.

3. Westlin, P.R. and R.T. Shigehara. ''Procedure for Calibrating and Using Dry Gas Volume Meters as Calibration Standards.'' Source Evaluation Society Newsletter. *3*(1) :17–30. February 1978.

4. Yu, K.K. ''Evaluation of Moisture Effect on Dry Gas Meter Calibration.'' Source Evaluation Society Newsletter. *5*(1) :24–28. February 1980.

5. NIOSH Manual of Analytical Methods, Volume 2. U.S. Department of Health and Human Services National Institute for Occupational Safety and Health. Center for Disease Control. 4676

Columbia Parkway, Cincinnati, OH 45226. (available from the Superintendent of Documents, Government Printing Office, Washington, DC 20402.)

6. Pinkerton, J.E. ''Method for Measuring Methanol in Pulp Mill Vent Gases.'' National Council of the Pulp and Paper Industry for Air and Stream Improvement, Inc., New York, NY.

17.0 Tables, Diagrams, Flowcharts, and Validation Data

[Reserved].

* * * * *

PART 261—[AMENDED]

1. The authority citation of part 261 continues to read as follows:

Authority: 42 U.S.C. 6905, 6912(a), 6921, 6922, and 6938.

2. Section 261.4 is amended by adding paragraph (a) (15) to read as follows:

§ 261.4 Exclusions.

(a) * * *

(15) Condensates derived from the overhead gases from kraft mill steam strippers that are used to comply with 40 CFR 63.446(e). The exemption applies only to combustion at the mill generating the condensates.

* * * * *

1. Part 430 is revised to read as follows:

PART 430—THE PULP, PAPER, AND PAPERBOARD POINT SOURCE CATEGORY

General Provisions

Sec.
430.00 Applicability.
430.01 General definitions.
430.02 Monitoring requirements.
430.03 Best management practices (BMPs) for spent pulping liquor, soap, and turpentine management, spill prevention, and control.

Subpart A—Dissolving Kraft Subcategory

Sec.
430.10 Applicability; description of the dissolving kraft subcategory.
430.11 Specialized definitions.
430.12 Effluent limitations representing the degree of effluent reduction attainable by the application of best practicable control technology currently available (BPT).
430.13 Effluent limitations guidelines representing the degree of effluent reduction attainable by the best conventional pollutant control technology (BCT).
430.14 Effluent limitations representing the degree of effluent reduction attainable by the application of best available technology economically achievable (BAT).
430.15 New source performance standards (NSPS).
430.16 Pretreatment standards for existing sources (PSES).
430.17 Pretreatment standards for new sources (PSNS).

Subpart B—Bleached Papergrade Kraft and Soda Subcategory

Sec.
430.20 Applicability; description of the bleached papergrade kraft and soda subcategory.
430.21 Specialized definitions.
430.22 Effluent limitations representing the degree of effluent reduction attainable by the application of best practicable control technology currently available (BPT).
430.23 Effluent limitations representing the degree of effluent reduction attainable by the best conventional pollutant control technology (BCT).
430.24 Effluent limitations representing the degree of effluent reduction attainable by the application of best available technology economically achievable (BAT).
430.25 New source performance standards (NSPS).
430.26 Pretreatment standards for existing sources (PSES).
430.27 Pretreatment standards for new sources (PSNS).
430.28 Best management practices (BMPs).

Subpart C—Unbleached Kraft Subcategory

Sec.
430.30 Applicability; description of the unbleached kraft subcategory.
430.31 Specialized definitions.
430.32 Effluent limitations representing the degree of effluent reduction attainable by the application of best practicable control technology currently available (BPT).
430.33 Effluent limitations representing the degree of effluent reduction attainable by the best conventional pollutant control technology (BCT).
430.34 Effluent limitations representing the degree of effluent reduction attainable by the application of best available technology economically achievable (BAT).
430.35 New source performance standards (NSPS).
430.36 Pretreatment standards for existing (PSES).
430.37 Pretreatment standards for new sources (PSNS).

Subpart D—Dissolving Sulfite Subcategory

Sec.
430.40 Applicability; description of the dissolving sulfite subcategory.
430.41 Specialized definitions.
430.42 Effluent limitations representing the degree of effluent reduction attainable by the application of best practicable control technology currently available (BPT).
430.43 Effluent limitations representing the degree of effluent reduction attainable by the best conventional pollutant control technology (BCT).
430.44 Effluent limitations representing the degree of effluent reduction attainable by the application of best available technology economically achievable (BAT).
430.45 New source performance standards (NSPS).
430.46 Pretreatment standards for existing sources (PSES).
430.47 Pretreatment standards for new sources (PSNS).

Subpart E—Papergrade Sulfite Subcategory

Sec.
430.50 Applicability; description of the papergrade sulfite subcategory.
430.51 Specialized definitions.
430.52 Effluent limitations representing the degree of effluent reduction attainable by the application of best practicable control technology currently available (BPT).
430.53 Effluent limitations representing the degree of effluent reduction attainable by the best conventional pollutant control technology (BCT).
430.54 Effluent limitations representing the degree of effluent reduction attainable by the application of best available technology economically achievable (BAT).
430.55 New source performance standards (NSPS).
430.56 Pretreatment standards for existing sources (PSES).
430.57 Pretreatment standards for new sources (PSNS).
430.58 Best management practices (BMPs).

Subpart F—Semi-Chemical Subcategory

Sec.
430.60 Applicability; description of the semi-chemical subcategory.
430.61 Specialized definitions.
430.62 Effluent limitations representing the degree of effluent reduction attainable by the application of best practicable control technology currently available (BPT).
430.63 Effluent limitations representing the degree of effluent reduction attainable by the best conventional pollutant control technology (BCT).
430.64 Effluent limitations representing the degree of effluent reduction attainable by the application of best available technology economically achievable (BAT).
430.65 New source performance standards (NSPS).
430.66 Pretreatment standards for existing sources (PSES).
430.67 Pretreatment standards for new sources (PSNS).

Subpart G—Mechanical Pulp Subcategory

Sec.
430.70 Applicability; description of the mechanical pulp subcategory.
430.71 Specialized definitions.
430.72 Effluent limitations representing the degree of effluent reduction attainable by the application of best practicable control technology currently available (BPT).

430.73 Effluent limitations representing the degree of effluent reduction attainable by the best conventional pollutant control technology (BCT).
430.74 Effluent limitations representing the degree of effluent reduction attainable by the application of best available technology economically achievable (BAT).
430.75 New source performance standards (NSPS).
430.76 Pretreatment standards for existing sources (PSES).
430.77 Pretreatment standards for new sources (PSNS).

Subpart H—Non-Wood Chemical Pulp Subcategory

Sec.
430.80 Applicability; description of the non-wood chemical pulp subcategory.
430.81 Specialized definitions.
430.82 Effluent limitations representing the degree of effluent reduction attainable by the application of best practicable control technology currently available (BPT). [Reserved]
430.83 Effluent limitations representing the degree of effluent reduction attainable by the best conventional pollutant control technology (BCT). [Reserved]
430.84 Effluent limitations representing the degree of effluent reduction attainable by the application of best available technology economically achievable (BAT). [Reserved]
430.85 New source performance standards (NSPS). [Reserved]
430.86 Pretreatment standards for existing sources (PSES). [Reserved]
430.87 Pretreatment standards for new sources (PSNS). [Reserved]

Subpart I—Secondary Fiber Deink Subcategory

Sec.
430.90 Applicability; description of the secondary fiber deink subcategory.
430.91 Specialized definitions.
430.92 Effluent limitations representing the degree of effluent reduction attainable by the application of best practicable control technology currently available (BPT).
430.93 Effluent limitations representing the degree of effluent reduction attainable by the best conventional pollutant control technology (BCT).
430.94 Effluent limitations representing the degree of effluent reduction attainable by the application of best available technology economically achievable (BAT).
430.95 New source performance standards (NSPS).
430.96 Pretreatment standards for existing sources (PSES).
430.97 Pretreatment standards for new sources (PSNS).

Subpart J—Secondary Fiber Non-Deink Subcategory

Sec.
430.100 Applicability; description of the secondary fiber non-deink subcategory.
430.101 Specialized definitions.
430.102 Effluent limitations representing the degree of effluent reduction attainable by the application of best practicable control technology currently available (BPT).
430.103 Effluent limitations representing the degree of effluent reduction attainable by the best conventional pollutant control technology (BCT).
430.104 Effluent limitations representing the degree of effluent reduction attainable by the application of best available technology economically achievable (BAT).
430.105 New source performance standards (NSPS).
430.106 Pretreatment standards for existing sources (PSES).
430.107 Pretreatment standards for new sources (PSNS).

Subpart K—Fine and Lightweight Papers From Purchased Pulp Subcategory

Sec.
430.110 Applicability; description of the fine and lightweight papers from purchased pulp subcategory.
430.111 Specialized definitions.
430.112 Effluent limitations representing the degree of effluent reduction attainable by the application of best practicable control technology currently available (BPT).
430.113 Effluent limitations representing the degree of effluent reduction attainable by the best conventional pollutant control technology (BCT).
430.114 Effluent limitations representing the degree of effluent reduction attainable by the application of best available technology economically achievable (BAT).
430.115 New source performance standards (NSPS).
430.116 Pretreatment standards for existing sources (PSES).
430.117 Pretreatment standards for new sources (PSNS).

Subpart L—Tissue, Filter, Non-Woven, and Paperboard From Purchased Pulp Subcategory

Sec.
430.120 Applicability; description of the tissue, filter, non-woven, and paperboard from purchased pulp subcategory.
430.121 Specialized definitions.
430.122 Effluent limitations representing the degree of effluent reduction attainable by the application of best practicable control technology currently available (BPT).
430.123 Effluent limitations representing the degree of effluent reduction attainable by the best conventional pollutant control technology (BCT).
430.124 Effluent limitations representing the degree of effluent reduction attainable by the application of best available technology economically achievable (BAT).
430.125 New source performance standards (NSPS).
430.126 Pretreatment standards for existing sources (PSES).
430.127 Pretreatment standards for new sources (PSNS).

Appendix A to Part 430—Methods 1650 and 1653

Authority: Sections 301, 304, 306, 307, 308, 402, and 501 of the Clean Water Act, as amended, (33 U.S.C. 1311, 1314, 1316, 1317, 1318, 1342, and 1361), and Section 112 of the Clean Air Act, as amended (42 U.S.C. 7412).

General Provisions

§ 430.00 Applicability.

(a) This part applies to any pulp, paper, or paperboard mill that discharges or may discharge process wastewater pollutants to the waters of the United States, or that introduces or may introduce process wastewater pollutants into a publicly owned treatment works.

(b) The following table presents the subcategorization scheme codified in this part, with references to former subpart designations contained in the 1997 edition of 40 CFR parts 425 through 699:

SUBCATEGORIZATION SCHEME WITH REFERENCES TO FORMER SUBPARTS CONTAINED IN THE JULY 1, 1997 EDITION OF 40 CFR PARTS 425 THROUGH 699

Final codified subpart	Final subcategorization scheme	Types of products covered in the subpart
A	Dissolving Kraft	Dissolving pulp at kraft mills (F[a])
B	Bleached Papergrade Kraft and Soda.	Market pulp at bleached kraft mills (G[a]); paperboard, coarse paper, and tissue paper at bleached kraft mills (H[a]); pulp and fine papers at bleached kraft mills (I[a]); and pulp and paper at soda mills (P[a]).
C	Unbleached Kraft	Pulp and paper at unbleached kraft mills including linerboard or bag paper and other mixed products (A[a]); pulp and paper using the unbleached kraft-neutral sulfite semi-chemical (cross recovery) process (D[a]); and pulp and paper at combined unbleached kraft and semi-chemical mills, wherein the spent semi-chemical cooking liquor is burned within the unbleached kraft chemical recovery system (V[a]).
D	Dissolving Sulfite	Pulp at dissolving sulfite mills for the following grades: nitration, viscose, cellophane, and acetate (K[a]).
E	Papergrade Sulfite —Calcium-, Magnesium-, or Sodium-based pulps. —Ammonium-based pulps. —Specialty grade pulps.	Pulp and paper at papergrade sulfite mills where blow pit pulp washing techniques are used (J[a]) and pulp and paper at papergrade sulfite mills where vacuum or pressure drums are used to wash pulp (U[a]).
F	Semi-Chemical	Pulp and paper at semi-chemical mills using an ammonia base or a sodium base (B[a]).
G	Mechanical Pulp	Pulp and paper at groundwood chemi-mechanical mills (L[a]); pulp and paper at groundwood mills through the application of the thermo-mechanical process (M[a]); pulp and coarse paper, molded pulp products, and newsprint at groundwood mills (N[a]); and pulp and fine paper at groundwood mills (O[a]).
H	Non-Wood Chemical Pulp	Pulp and paper at non-wood chemical pulp mills.
I	Secondary Fiber Deink	Pulp and paper at deink mills including fine papers, tissue papers, or newsprint (Q[a]).
J	Secondary Fiber Non-Deink	Paperboard from wastepaper from noncorrugating medium furnish or from corrugating medium furnish (E[a]); tissue paper from wastepaper without deinking at secondary fiber mills (T[a]); molded products from wastepaper without deinking (W[a]); and builders' paper and roofing felt from wastepaper (40 CFR Part 431, Subpart A[a]).
K	Fine and Lightweight Papers from Purchased Pulp.	Fine Papers at nonintegrated mills using wood fiber furnish or cotton fiber furnish (R[a]); and lightweight papers at nonintegrated mills or lightweight electrical papers at nonintegrated mills (X[a]).
L	Tissue, Filter, Non-woven, and Paperboard from Purchased Pulp.	Tissue papers at nonintegrated mills (S[a]); filter and non-woven papers at nonintegrated mills (Y[a]); and paperboard at nonintegrated mills (Z[a]).

[a] This subpart is contained in the 40 CFR parts 425 through 699, edition revised as of July 1, 1997.

§ 430.01 General definitions.

In addition to the definitions set forth in 40 CFR part 401 and 40 CFR 403.3, the following definitions apply to this part:

(a) *Adsorbable organic halides (AOX).* A bulk parameter that measures the total mass of chlorinated organic matter in water and wastewater.

(b) *Annual average.* The mean concentration, mass loading or production-normalized mass loading of a pollutant over a period of 365 consecutive days (or such other period of time determined by the permitting authority to be sufficiently long to encompass expected variability of the concentration, mass loading, or production-normalized mass loading at the relevant point of measurement).

(c) *Bleach plant.* All process equipment used for bleaching beginning with the first application of bleaching agents (e.g., chlorine, chlorine dioxide, ozone, sodium or calcium hypochlorite, or peroxide), each subsequent extraction stage, and each subsequent stage where bleaching agents are applied to the pulp. For mills in Subpart E of this part producing specialty grades of pulp, the bleach plant includes process equipment used for the hydrolysis or extraction stages prior to the first application of bleaching agents. Process equipment used for oxygen delignification prior to the application of bleaching agents is not part of the bleach plant.

(d) *Bleach plant effluent.* The total discharge of process wastewaters from the bleach plant from each physical bleach line operated at the mill, comprising separate acid and alkaline filtrates or the combination thereof.

(e) *Chemical oxygen demand (COD).* A bulk parameter that measures the oxygen-consuming capacity of organic and inorganic matter present in water or wastewater. It is expressed as the amount of oxygen consumed from a chemical oxidant in a specific test.

(f) *Elemental chlorine-free (ECF).* Any process for bleaching pulps in the absence of elemental chlorine and hypochlorite that uses exclusively chlorine dioxide as the only chlorine-containing bleaching agent.

(g) *End of the pipe.* The point at which final mill effluent is discharged to waters of the United States or introduced to a POTW.

(h) *Fiber line.* A series of operations employed to convert wood or other fibrous raw material into pulp. If the final product is bleached pulp, the fiber line encompasses pulping, de-knotting, brownstock washing, pulp screening, centrifugal cleaning, and multiple bleaching and washing stages.

(i) *Minimum level (ML).* The level at which the analytical system gives recognizable signals and an acceptable calibration point. The following minimum levels apply to pollutants in this part.

Pollutant	Method	Minimum level
2,3,7,8-TCDD	1613	10 pg/L [a]
2,3,7,8-TCDF	1613	10 pg/L [a]
Trichlorosyringol	1653	2.5 ug/L [b]
3,4,5-Trichlorocatechol	1653	5.0 ug/L [b]
3,4,6-Trichlorocatechol	1653	5.0 ug/L [b]
3,4,5-Trichloroguaiacol	1653	2.5 ug/L [b]
3,4,6-Trichloroguaiacol	1653	2.5 ug/L [b]
4,5,6-Trichloroguaiacol	1653	2.5 ug/L [b]
2,4,5-Trichlorophenol	1653	2.5 ug/L [b]
2,4,6-Trichlorophenol	1653	2.5 ug/L [b]
Tetrachlorocatechol	1653	5.0 ug/L [b]
Tetrachloroguaiacol	1653	5.0 ug/L [b]
2,3,4,6-Tetrachlorophenol	1653	2.5 ug/L [b]
Pentachlorophenol	1653	5.0 ug/L [b]
AOX	1650	20 ug/L [b]

[a] Picograms per liter.
[b] Micrograms per liter.

(j) *New source.* (1) Notwithstanding the criteria codified at 40 CFR 122.29(b)(1), a source subject to subpart B or E of this part is a ''new source'' if it meets the definition of ''new source'' at 40 CFR 122.2 and:

(i) It is constructed at a site at which no other source is located; or

(ii) It totally replaces the process or production equipment that causes the discharge of pollutants at an existing source, including the total replacement of a fiber line that causes the discharge of pollutants at an existing source, except as provided in paragraph (j)(2) of this section; or

(iii) Its processes are substantially independent of an existing source at the same site. In determining whether these processes are substantially independent, the Director shall consider such factors as the extent to which the new facility is integrated with the existing plant; and the extent to which the new facility is engaged in the same general type of activity as the existing source.

(2) The following are examples of changes made by mills subject to subparts B or E of this part that alone do not cause an existing mill to become a ''new source'':

(i) Upgrades of existing pulping operations;

(ii) Upgrades or replacement of pulp screening and washing operations;

(iii) Installation of extended cooking and/or oxygen delignification systems or other post-digester, pre-bleaching delignification systems;

(iv) Bleach plant modifications including changes in methods or amounts of chemical applications, new chemical applications, installation of new bleaching towers to facilitate replacement of sodium or calcium hypochlorite, and installation of new pulp washing systems; or

(v) Total replacement of process or production equipment that causes the discharge of pollutants at an existing source (including a replacement fiber line), but only if such replacement is performed for the purpose of achieving limitations that have been included in the discharger's NPDES permit pursuant to § 430.24(b).

(k) *Non-continuous discharger.* (1) Except as provided in paragraph (k)(2) of this section, a non-continuous discharger is a mill which is prohibited by the NPDES authority from discharging pollutants during specific periods of time for reasons other than treatment plant upset control, such periods being at least 24 hours in duration. A mill shall not be deemed a non-continuous discharger unless its permit, in addition to setting forth the prohibition described above, requires compliance with the effluent limitations established for non-continuous dischargers and also requires compliance with maximum day and average of 30 consecutive days effluent limitations. Such maximum day and average of 30 consecutive days effluent limitations for non-continuous dischargers shall be established by the NPDES authority in the form of concentrations which reflect wastewater treatment levels that are representative of the application of the best practicable control technology currently available, the best conventional pollutant control technology, or new source performance standards in lieu of the maximum day and average of 30 consecutive days effluent limitations for conventional pollutants set forth in each subpart.

(2) A mill is a non-continuous discharger for the purposes of determining applicable effluent limitations under subpart B or E of this part (other than conventional limits for existing sources) if, for reasons other than treatment plant upset control (e.g., protecting receiving water quality), the mill is prohibited by the NPDES authority from discharging pollutants during specific periods of time or if it is required to release its discharge on a variable flow or pollutant loading rate basis.

(l) *POTW.* Publicly owned treatment works as defined at 40 CFR 403.3(o).

(m) *Process wastewater.* For subparts B and E only, process wastewater is any water that, during manufacturing or processing, comes into direct contact with or results from the production or use of any raw material, intermediate product, finished product, byproduct, or waste product. For purposes of subparts B and E of this part, process wastewater includes boiler blowdown; wastewaters from water treatment and other utility operations; blowdowns from high rate (e.g., greater than 98 percent) recycled non-contact cooling water systems to the extent they are mixed and co-treated with other process wastewaters; wastewater, including leachates, from landfills owned by pulp and paper mills subject to subpart B or E of this part if the wastewater is commingled with wastewater from the mill's manufacturing or processing facility; and storm waters from the immediate process areas to the extent they are mixed and co-treated with other process wastewaters. For purposes of this part, contaminated groundwaters from on-site or off-site groundwater remediation projects are not process wastewater.

(n) *Production.* (1) For all limitations and standards specified in this part except those pertaining to AOX and chloroform: Production shall be defined as the annual off-the-machine production (including off-the-machine coating where applicable) divided by the number of operating days during that year. Paper and paperboard production shall be measured at the off-the-machine moisture content, except for subpart C of this part (as it pertains to pulp and paperboard production at

unbleached kraft mills including linerboard or bag paper and other mixed products, and to pulp and paperboard production using the unbleached kraft neutral sulfite semi-chemical (cross recovery) process), and subparts F and J of this part (as they pertain to paperboard production from wastepaper from noncorrugating medium furnish or from corrugating medium furnish) where paper and paperboard production shall be measured in air-dry-tons (10% moisture content). Market pulp shall be measured in air-dry tons (10% moisture). Production shall be determined for each mill based upon past production practices, present trends, or committed growth.

(2) For AOX and chloroform limitations and standards specified in subparts B and E of this part: Production shall be defined as the annual unbleached pulp production entering the first stage of the bleach plant divided by the number of operating days during that year. Unbleached pulp production shall be measured in air-dried-metric-tons (10% moisture) of brownstock pulp entering the bleach plant at the stage during which chlorine or chlorine-containing compounds are first applied to the pulp. In the case of bleach plants that use totally chlorine free bleaching processes, unbleached pulp production shall be measured in air-dried-metric tons (10% moisture) of brownstock pulp entering the first stage of the bleach plant from which wastewater is discharged. Production shall be determined for each mill based upon past production practices, present trends, or committed growth.

(o) *TCDD.* 2,3,7,8-tetrachlorodibenzo-p-dioxin.

(p) *TCDF.* 2,3,7,8-tetrachlorodibenzo-p-furan.

(q) *Totally chlorine-free (TCF) bleaching.* Pulp bleaching operations that are performed without the use of chlorine, sodium hypochlorite, calcium hypochlorite, chlorine dioxide, chlorine monoxide, or any other chlorine-containing compound.

(r) *Wet Barking.* Wet barking operations shall be defined to include hydraulic barking operations and wet drum barking operations which are those drum barking operations that use substantial quantities of water in either water sprays in the barking drums or in a partial submersion of the drums in a ''tub'' of water.

§ 430.02 Monitoring requirements.

This section establishes minimum monitoring frequencies for certain pollutants. Where no monitoring frequency is specified in this section or where the duration of the minimum monitoring frequency has expired under paragraphs (b) through (e) of this section, the permit writer or pretreatment control authority shall determine the appropriate monitoring frequency in accordance with 40 CFR 122.44(i) or 40 CFR part 403, as applicable.

(a) *BAT, NSPS, PSES, and PSNS monitoring frequency for chlorinated organic pollutants.* The following monitoring frequencies apply to discharges subject to subpart B or subpart E of this part:

CAS number	Pollutant	Minimum monitoring frequency	
		Non-TCF[a]	TCF[b]
1198556	Tetrachlorocatechol	Monthly	([c])
2539175	Tetrachloroguaiacol	Monthly	([c])
2539266	Trichlorosyringol	Monthly	([c])
2668248	4,5,6-trichloroguaiacol	Monthly	([c])
32139723	3,4,6-trichlorocatechol	Monthly	([c])
56961207	3,4,5-trichlorocatechol	Monthly	([c])
57057837	3,4,5-trichloroguaiacol	Monthly	([c])
58902	2,3,4,6-tetrachlorophenol	Monthly	([c])
60712449	3,4,6-trichloroguaiacol	Monthly	([c])
87865	Pentachlorophenol[d]	Monthly	([c])
88062	2,4,6-trichlorophenol[d]	Monthly	([c])
95954	2,4,5-trichlorophenol[d]	Monthly	([c])
1746016	2,3,7,8-TCDD	Monthly	([c])
51207319	2,3,7,8-TCDF	Monthly	([c])
67663	chloroform[e]	Weekly	([c])
59473040	AOX[f]	Daily	None specified.

[a] Non-TCF: Pertains to any fiber line that does not use exclusively TCF bleaching processes.

[b] TCF: Pertains to any fiber line that uses exclusively TCF bleaching processes, as disclosed by the discharger in its permit application under 40 CFR 122.21(g)(3) and certified under 40 CFR 122.22 or, for indirect dischargers, as reported to the pretreatment control authority under 40 CFR 403.12 (b), (d), or (e).

[c] This regulation does not specify a limit for this pollutant for TCF bleaching processes.

[d] Monitoring frequency does not apply to this compound when used as a biocide. The permitting or pretreatment control authority must determine the appropriate monitoring frequency for this compound, when used as a biocide, under 40 CFR 122.44(i) or 40 CFR Part 403, as applicable.

[e] This regulation does not specify a limit for this pollutant for Subpart E mills.

[f] This regulation does not specify a limit for this pollutant for the ammonium-based or specialty grade sulfite pulp segments of Subpart E.

(b) *Duration of required monitoring for BAT, NSPS, PSES, and PSNS.* The monitoring frequencies specified in paragraph (a) of this section apply for the following time periods:

(1) For direct dischargers, a duration of five years commencing on the date the applicable limitations or standards from subpart B or subpart E of this part are first included in the discharger's NPDES permit;

(2) For existing indirect dischargers, until April 17, 2006;

(3) For new indirect dischargers, a duration of five years commencing on the date the indirect discharger commences operation.

(c) *Reduced monitoring frequencies for bleach plant pollutants under the Voluntary Advanced Technology Incentives Program.* The following monitoring frequencies apply to mills enrolled in the Voluntary Advanced Technology Incentives Program established under subpart B of this part for a duration of five years commencing after achievement of the applicable BAT limitations specified in § 430.24(b)(3) or NSPS specified in § 430.25(c)(1) for the following pollutants, except as noted in footnote f:

CAS number	Pollutant	Minimum monitoring frequency		
		Non-ECF [a]	Advanced ECF [b,f]	TCF [c]
1198556	Tetrachlorocatechol	Monthly	Monthly	([d])
2539175	Tetrachloroguiacol	Monthly	Monthly	([d])
2539266	Trichlorosyringol	Monthly	Monthly	([d])
2668248	4,5,6-trichloroguaiacol	Monthly	Monthly	([d])
32139723	3,4,6-trichlorocatechol	Monthly	Monthly	([d])
56961207	3,4,5-trichlorocatechol	Monthly	Monthly	([d])
57057837	3,4,5-trichloroguaiacol	Monthly	Monthly	([d])
58902	2,3,4,6-tetrachlorophenol	Monthly	Monthly	([d])
60712449	3,4,6-trichloroguaiacol	Monthly	Monthly	([d])
87865	Pentachlorophenol [e]	Monthly	Monthly	([d])
88062	2,4,6-trichlorophenol [e]	Monthly	Monthly	([d])
95954	2,4,5-trichlorophenol [e]	Monthly	Monthly	([d])
1746016	2,3,7,8-TCDD	Monthly	Monthly	([d])
51207319	2,3,7,8-TCDF	Monthly	Monthly	([d])
67663	Chloroform	Weekly	Monthly	([d])

[a] Non-ECF: Pertains to any fiber line that does not use exclusively ECF or TCF bleaching processes.
[b] Advanced ECF: Pertains to any fiber line that uses exclusively Advanced ECF bleaching processes, or exclusively ECF and TCF bleaching processes as disclosed by the discharger in its permit application under 40 CFR 122.21(g)(3) and certified under 40 CFR 122.22. Advanced ECF consists of the use of extended delignification or other technologies that achieve at least the Tier I performance levels specified in § 430.24(b)(4)(i).
[c] TCF: Pertains to any fiber line that uses exclusively TCF bleaching processes, as disclosed by the discharger in its permit application under 40 CFR 122.21(g)(3) and certified under 40 CFR 122.22.
[d] This regulation does not specify a limit for this pollutant for TCF bleaching processes.
[e] Monitoring frequency does not apply to this compound when used as a biocide. The permitting authority must determine the appropriate monitoring frequency for this compound, when used as a biocide, under 40 CFR 122.44(i).
[f] Monitoring requirements for these pollutants by mills certifying as Advanced ECF in their NPDES permit application or other communication to the permitting authority will be suspended after one year of monitoring. The permitting authority must determine the appropriate monitoring frequency for these pollutants beyond that time under 40 CFR 122.44(i).

(d) *Reduced monitoring frequencies for AOX under the Voluntary Advanced Technology Incentives Program (year one).* The following monitoring frequencies apply to direct dischargers enrolled in the Voluntary Advanced Technology Incentives Program established under Subpart B of this part for a duration of one year after achievement of the applicable BAT limitations specified in § 430.24(b)(4)(i) or NSPS specified in § 430.25(c)(2):

CAS number	Pollutant	Non-ECF, any tier [a]	Advanced ECF, any tier [b]	TCF, any tier [c]
59473040	AOX	Daily	Weekly	None specified.

[a] Non-ECF: Pertains to any fiber line that does not use exclusively ECF or TCF bleaching processes.
[b] Advanced ECF: Pertains to any fiber line that uses exclusively Advanced ECF bleaching processes or exclusively ECF and TCF bleaching processes, as disclosed by the discharger in its permit application under 40 CFR 122.21(g)(3) and certified under 40 CFR 122.22. Advanced ECF consists of the use of extended delignification or other technologies that achieve at least the Tier I performance levels specified in § 430.24(b)(4)(i).
[c] TCF: Pertains to any fiber line that uses exclusively TCF bleaching processes, as disclosed by the discharger in its permit application under 40 CFR 122.21(g)(3) and certified under 40 CFR 122.22.

(e) *Reduced monitoring frequencies for AOX under the Voluntary Advanced Technology Incentives Program (years two through five).* The following monitoring frequencies apply to mills enrolled in the Voluntary Advanced Technology Incentives Program established under Subpart B of this part for a duration of four years starting one year after achievement of the applicable BAT limitations specified in § 430.24(b)(4)(i) or NSPS specified in § 430.25(c)(2):

CAS number	Pollutant	Non-ECF any tier [a]	Advanced ECF—tier I [b]	Advanced ECF—tier II [b]	Advanced ECF—tier III [b]	TCF—any tier [c]
59473040	AOX	Daily	Monthly	Quarterly	Annually	None specified.

[a] Non-ECF: Pertains to any fiber line that does not use exclusively ECF or TCF bleaching processes.
[b] Advanced ECF: Pertains to any fiber line that uses exclusively Advanced ECF bleaching processes or exclusively ECF and TCF bleaching processes, as disclosed by the discharger in its permit application under 40 CFR 122.21(g)(3) and certified under 40 CFR 122.22. Advanced ECF consists of the use of extended delignification or other technologies that achieve at least the Tier I performance levels specified in § 430.24(b)(4)(i).
[c] TCF: Pertains to any fiber line that uses exclusively TCF bleaching processes, as disclosed by the discharger in its permit application under 40 CFR 122.21(g)(3) and certified under 40 CFR 122.22.

§ 430.03 Best management practices (BMPs) for spent pulping liquor, soap, and turpentine management, spill prevention, and control.

(a) *Applicability.* This section applies to direct and indirect discharging pulp, paper, and paperboard mills with pulp production in subparts B (Bleached Papergrade Kraft and Soda) and E (Papergrade Sulfite).

(b) *Specialized definitions.* (1) *Action Level:* A daily pollutant loading that when exceeded triggers investigative or corrective action. Mills determine action levels by a statistical analysis of six months of daily measurements collected at the mill. For example, the lower action level may be the 75th percentile of the running seven-day averages (that value exceeded by 25 percent of the running seven-day averages) and the upper action level may be the 90th percentile of the running seven-day averages (that value exceeded by 10 percent of the running seven-day averages).

(2) *Equipment Items in Spent Pulping Liquor, Soap, and Turpentine Service:* Any process vessel, storage tank, pumping system, evaporator, heat exchanger, recovery furnace or boiler, pipeline, valve, fitting, or other device that contains, processes, transports, or comes into contact with spent pulping liquor, soap, or turpentine. Sometimes referred to as ''equipment items.''

(3) *Immediate Process Area:* The location at the mill where pulping, screening, knotting, pulp washing, pulping liquor concentration, pulping liquor processing, and chemical recovery facilities are located, generally the battery limits of the aforementioned processes. ''Immediate process area'' includes spent pulping liquor storage and spill control tanks located at the mill, whether or not they are located in the immediate process area.

(4) *Intentional Diversion:* The planned removal of spent pulping liquor, soap, or turpentine from equipment items in spent pulping liquor, soap, or turpentine service by the mill for any purpose including, but not limited to, maintenance, grade changes, or process shutdowns.

(5) *Mill:* The owner or operator of a direct or indirect discharging pulp, paper, or paperboard manufacturing facility subject to this section.

(6) *Senior Technical Manager:* The person designated by the mill manager to review the BMP Plan. The senior technical manager shall be the chief engineer at the mill, the manager of pulping and chemical recovery operations, or other such responsible person designated by the mill manager who has knowledge of and responsibility for pulping and chemical recovery operations.

(7) *Soap:* The product of reaction between the alkali in kraft pulping liquor and fatty acid portions of the wood, which precipitate out when water is evaporated from the spent pulping liquor.

(8) *Spent Pulping Liquor:* For kraft and soda mills ''spent pulping liquor'' means black liquor that is used, generated, stored, or processed at any point in the pulping and chemical recovery processes. For sulfite mills ''spent pulping liquor'' means any intermediate, final, or used chemical solution that is used, generated, stored, or processed at any point in the sulfite pulping and chemical recovery processes (e.g., ammonium-, calcium-, magnesium-, or sodium-based sulfite liquors).

(9) *Turpentine:* A mixture of terpenes, principally pinene, obtained by the steam distillation of pine gum recovered from the condensation of digester relief gases from the cooking of softwoods by the kraft pulping process. Sometimes referred to as sulfate turpentine.

(c) *Requirement to implement Best Management Practices.* Each mill subject to this section must implement the Best Management Practices (BMPs) specified in paragraphs (c)(1) through (10) of this section. The primary objective of the BMPs is to prevent leaks and spills of spent pulping liquors, soap, and turpentine. The secondary objective is to contain, collect, and recover at the immediate process area, or otherwise control, those leaks, spills, and intentional diversions of spent pulping liquor, soap, and turpentine that do occur. BMPs must be developed according to best engineering practices and must be implemented in a manner that takes into account the specific circumstances at each mill. The BMPs are as follows:

(1) The mill must return spilled or diverted spent pulping liquors, soap, and turpentine to the process to the maximum extent practicable as determined by the mill, recover such materials outside the process, or discharge spilled or diverted material at a rate that does not disrupt the receiving wastewater treatment system.

(2) The mill must establish a program to identify and repair leaking equipment items. This program must include:

(i) Regular visual inspections (e.g., once per day) of process areas with equipment items in spent pulping liquor, soap, and turpentine service;

(ii) Immediate repairs of leaking equipment items, when possible. Leaking equipment items that cannot be repaired during normal operations must be identified, temporary means for mitigating the leaks must be provided, and the leaking equipment items repaired during the next maintenance outage;

(iii) Identification of conditions under which production will be curtailed or halted to repair leaking equipment items or to prevent pulping liquor, soap, and turpentine leaks and spills; and

(iv) A means for tracking repairs over time to identify those equipment items where upgrade or replacement may be warranted based on frequency and severity of leaks, spills, or failures.

(3) The mill must operate continuous, automatic monitoring systems that the mill determines are necessary to detect and control leaks, spills, and intentional diversions of spent pulping liquor, soap, and turpentine. These monitoring systems should be integrated with the mill process control system and may include, e.g., high level monitors and alarms on storage tanks; process area conductivity (or pH) monitors and alarms; and process area sewer, process wastewater, and wastewater treatment plant conductivity (or pH) monitors and alarms.

(4) The mill must establish a program of initial and refresher training of operators, maintenance personnel, and other technical and supervisory personnel who have responsibility for operating, maintaining, or supervising the operation and maintenance of equipment items in spent pulping liquor, soap, and turpentine service. The refresher training must be conducted at least annually and the training program must be documented.

(5) The mill must prepare a brief report that evaluates each spill of spent pulping liquor, soap, or turpentine that is not contained at the immediate process area and any intentional diversion of spent pulping liquor, soap, or turpentine that is not contained at the immediate process area. The report must describe the equipment items involved, the circumstances leading to the incident, the effectiveness of the corrective actions taken to contain and recover the spill or intentional diversion, and plans to develop changes to equipment and operating and maintenance practices as necessary to prevent recurrence. Discussion of the reports must be included as part of the annual refresher training.

(6) The mill must establish a program to review any planned modifications to the pulping and chemical recovery facilities and any construction activities in the pulping and chemical recovery areas before these activities commence. The purpose of such review is to prevent leaks and spills of spent

pulping liquor, soap, and turpentine during the planned modifications, and to ensure that construction and supervisory personnel are aware of possible liquor diversions and of the requirement to prevent leaks and spills of spent pulping liquors, soap, and turpentine during construction.

(7) The mill must install and maintain secondary containment (i.e., containment constructed of materials impervious to pulping liquors) for spent pulping liquor bulk storage tanks equivalent to the volume of the largest tank plus sufficient freeboard for precipitation. An annual tank integrity testing program, if coupled with other containment or diversion structures, may be substituted for secondary containment for spent pulping liquor bulk storage tanks.

(8) The mill must install and maintain secondary containment for turpentine bulk storage tanks.

(9) The mill must install and maintain curbing, diking or other means of isolating soap and turpentine processing and loading areas from the wastewater treatment facilities.

(10) The mill must conduct wastewater monitoring to detect leaks and spills, to track the effectiveness of the BMPs, and to detect trends in spent pulping liquor losses. Such monitoring must be performed in accordance with paragraph (i) of this section.

(d) *Requirement to develop a BMP Plan.* (1) Each mill subject to this section must prepare and implement a BMP Plan. The BMP Plan must be based on a detailed engineering review as described in paragraphs (d)(2) and (3) of this section. The BMP Plan must specify the procedures and the practices required for each mill to meet the requirements of paragraph (c) of this section, the construction the mill determines is necessary to meet those requirements including a schedule for such construction, and the monitoring program (including the statistically derived action levels) that will be used to meet the requirements of paragraph (i) of this section. The BMP Plan also must specify the period of time that the mill determines the action levels established under paragraph (h) of this section may be exceeded without triggering the responses specified in paragraph (i) of this section.

(2) Each mill subject to this section must conduct a detailed engineering review of the pulping and chemical recovery operations—including but not limited to process equipment, storage tanks, pipelines and pumping systems, loading and unloading facilities, and other appurtenant pulping and chemical recovery equipment items in spent pulping liquor, soap, and turpentine service—for the purpose of determining the magnitude and routing of potential leaks, spills, and intentional diversions of spent pulping liquors, soap, and turpentine during the following periods of operation:

(i) Process start-ups and shut downs;

(ii) Maintenance;

(iii) Production grade changes;

(iv) Storm or other weather events;

(v) Power failures; and

(vi) Normal operations.

(3) As part of the engineering review, the mill must determine whether existing spent pulping liquor containment facilities are of adequate capacity for collection and storage of anticipated intentional liquor diversions with sufficient contingency for collection and containment of spills. The engineering review must also consider:

(i) The need for continuous, automatic monitoring systems to detect and control leaks and spills of spent pulping liquor, soap, and turpentine;

(ii) The need for process wastewater diversion facilities to protect end-of-pipe wastewater treatment facilities from adverse effects of spills and diversions of spent pulping liquors, soap, and turpentine;

(iii) The potential for contamination of storm water from the immediate process areas; and

(iv) The extent to which segregation and/or collection and treatment of contaminated storm water from the immediate process areas is appropriate.

(e) *Amendment of BMP Plan.* (1) Each mill subject to this section must amend its BMP Plan whenever there is a change in mill design, construction, operation, or maintenance that materially affects the potential for leaks or spills of spent pulping liquor, turpentine, or soap from the immediate process areas.

(2) Each mill subject to this section must complete a review and evaluation of the BMP Plan five years after the first BMP Plan is prepared and, except as provided in paragraph (e)(1) of this section, once every five years thereafter. As a result of this review and evaluation, the mill must amend the BMP Plan within three months of the review if the mill determines that any new or modified management practices and engineered controls are necessary to reduce significantly the likelihood of spent pulping liquor, soap, and turpentine leaks, spills, or intentional diversions from the immediate process areas, including a schedule for implementation of such practices and controls.

(f) *Review and certification of BMP Plan.* The BMP Plan, and any amendments thereto, must be reviewed by the senior technical manager at the mill and approved and signed by the mill manager. Any person signing the BMP Plan or its amendments must certify to the permitting or pretreatment control authority under penalty of law that the BMP Plan (or its amendments) has been prepared in accordance with good engineering practices and in accordance with this regulation. The mill is not required to obtain approval from the permitting or pretreatment control authority of the BMP Plan or any amendments thereto.

(g) *Record keeping requirements.* (1) Each mill subject to this section must maintain on its premises a complete copy of the current BMP Plan and the records specified in paragraph (g)(2) of this section and must make such BMP Plan and records available to the permitting or pretreatment control authority and the Regional Administrator or his or her designee for review upon request.

(2) The mill must maintain the following records for three years from the date they are created:

(i) Records tracking the repairs performed in accordance with the repair program described in paragraph (c)(2) of this section;

(ii) Records of initial and refresher training conducted in accordance with paragraph (c)(4) of this section;

(iii) Reports prepared in accordance with paragraph (c)(5) of this section; and

(iv) Records of monitoring required by paragraphs (c)(10) and (i) of this section.

(h) *Establishment of wastewater treatment system influent action levels.* (1) Each mill subject to this section must conduct a monitoring program, described in paragraph (h)(2) of this section, for the purpose of defining wastewater treatment system influent characteristics (or action levels), described in paragraph (h)(3) of this section, that will trigger requirements to initiate investigations on BMP effectiveness and to take corrective action.

(2) Each mill subject to this section must employ the following procedures in order to develop the action levels required by paragraph (h) of this section:

(i) *Monitoring parameters.* The mill must collect 24-hour composite samples and analyze the samples for a measure of organic content (e.g., Chemical Oxygen Demand (COD) or Total Organic Carbon (TOC)). Alternatively, the mill may use a measure related to spent pulping liquor losses measured continuously and averaged over 24 hours (e.g., specific conductivity or color).

(ii) *Monitoring locations.* For direct dischargers, monitoring must be conducted at the point influent enters the wastewater treatment system. For indirect dischargers monitoring must be conducted at the point of discharge to the POTW. For the purposes of this requirement, the mill may select alternate monitoring point(s) in order to isolate possible sources of spent pulping liquor, soap, or turpentine from other possible sources of organic wastewaters that are tributary to the wastewater treatment facilities (e.g., bleach plants, paper machines and secondary fiber operations).

(3) By the date prescribed in paragraph (j)(1)(iii) of this section, each existing discharger subject to this section must complete an initial six-month monitoring program using the procedures specified in paragraph (h)(2) of this section and must establish initial action levels based on the results of that program. A wastewater treatment influent action level is a statistically determined pollutant loading determined by a statistical analysis of six months of daily measurements. The action levels must consist of a lower action level, which if exceeded will trigger the investigation requirements described in paragraph (i) of this section, and an upper action level, which if exceeded will trigger the corrective action requirements described in paragraph (i) of this section.

(4) By the date prescribed in paragraph (j)(1)(vi) of this section, each existing discharger must complete a second six-month monitoring program using the procedures specified in paragraph (h)(2) of this section and must establish revised action levels based on the results of that program. The initial action levels shall remain in effect until replaced by revised action levels.

(5) By the date prescribed in paragraph (j)(2) of this section, each new source subject to this section must complete a six-month monitoring program using the procedures specified in paragraph (h)(2) of this section and must develop a lower action level and an upper action level based on the results of that program.

(6) Action levels developed under this paragraph must be revised using six months of monitoring data after any change in mill design, construction, operation, or maintenance that materially affects the potential for leaks or spills of spent pulping liquor, soap, or turpentine from the immediate process areas.

(i) *Monitoring, corrective action, and reporting requirements.* (1) Each mill subject to this section must conduct daily monitoring of the influent to the wastewater treatment system in accordance with the procedures described in paragraph (h)(2) of this section for the purpose of detecting leaks and spills, tracking the effectiveness of the BMPs, and detecting trends in spent pulping liquor losses.

(2) Whenever monitoring results exceed the lower action level for the period of time specified in the BMP Plan, the mill must conduct an investigation to determine the cause of such exceedance. Whenever monitoring results exceed the upper action level for the period of time specified in the BMP Plan, the mill must complete corrective action to bring the wastewater treatment system influent mass loading below the lower action level as soon as practicable.

(3) Although exceedances of the action levels will not constitute violations of an NPDES permit or pretreatment standard, failure to take the actions required by paragraph (i)(2) of this section as soon as practicable will be a permit or pretreatment standard violation.

(4) Each mill subject to this section must report to the NPDES permitting or pretreatment control authority the results of the daily monitoring conducted pursuant to paragraph (i)(1) of this section. Such reports must include a summary of the monitoring results, the number and dates of exceedances of the applicable action levels, and brief descriptions of any corrective actions taken to respond to such exceedances. Submission of such reports shall be at the frequency established by the NPDES permitting or pretreatment control authority, but in no case less than once per year.

(j) *Compliance deadlines.* (1) *Existing direct and indirect dischargers.* Except as provided in paragraph (j)(2) of this section for new sources, indirect discharging mills subject to this section must meet the deadlines set forth below. Except as provided in paragraph (j)(2) of this section for new sources, NPDES permits must require direct discharging mills subject to this section to meet the deadlines set forth below. If a deadline set forth below has passed at the time the NPDES permit containing the BMP requirement is issued, the NPDES permit must require immediate compliance with such BMP requirement(s).

(i) Prepare BMP Plans and certify to the permitting or pretreatment authority that the BMP Plan has been prepared in accordance with this regulation not later than April 15, 1999;

(ii) Implement all BMPs specified in paragraph (c) of this section that do not require the construction of containment or diversion structures or the installation of monitoring and alarm systems not later than April 15, 1999.

(iii) Establish initial action levels required by paragraph (h)(3) of this section not later than April 15, 1999.

(iv) Commence operation of any new or upgraded continuous, automatic monitoring systems that the mill determines to be necessary under paragraph (c)(3) of this section (other than those associated with construction of containment or diversion structures) not later than April 17, 2000.

(v) Complete construction and commence operation of any spent pulping liquor, collection, containment, diversion, or other facilities, including any associated continuous monitoring systems, necessary to fully implement BMPs specified in paragraph (c) of this section not later than April 16, 2001.

(vi) Establish revised action levels required by paragraph (h)(4) of this section as soon as possible after fully implementing the BMPs specified in paragraph (c) of this section, but not later than January 15, 2002.

(2) *New Sources.* Upon commencing discharge, new sources subject to this section must implement all of the BMPs specified in paragraph (c) of this section, prepare the BMP Plan required by paragraph (d) of this section, and certify to the permitting or pretreatment authority that the BMP Plan has been prepared in accordance with this regulation as required by paragraph (f) of this section, except that the action levels required by paragraph (h)(5) of this section must be established not later than 12 months after commencement of discharge, based on six months of monitoring data obtained prior to that date in accordance with the procedures specified in paragraph (h)(2) of this section.

Subpart A—Dissolving Kraft Subcategory

§ 430.10 Applicability; description of the dissolving kraft subcategory.

The provisions of this subpart apply to discharges resulting from the production of dissolving pulp at kraft mills.

§ 430.11 Specialized definitions.

For the purpose of this subpart, the general definitions, abbreviations, and methods of analysis set forth in 40 CFR part 401 and § 430.01 of this part shall apply to this subpart.

§ 430.12 Effluent limitations representing the degree of effluent reduction attainable by the application of the best practicable control technology currently available (BPT).

(a) Except as provided in 40 CFR 125.30 through 125.32, any existing point source subject to this subpart must achieve the following effluent limitations representing the degree of effluent reduction attainable by the application of the best practicable control technology currently available (BPT), except that non-continuous dischargers shall not be subject to the maximum day and average of 30 consecutive days limitations but shall be subject to annual average effluent limitations:

SUBPART A

[BPT effluent limitations]

Pollutant or pollutant property	Kg/kkg (or pounds per 1,000 lb) of product		
	Continuous dischargers		Non-continuous dischargers
	Maximum for any 1 day	Average of daily values for 30 consecutive days	
BOD5	23.6	12.25	6.88
TSS	37.3	20.05	11.02
pH	(1)	(1)	(1)

1 Within the range of 5.0 to 9.0 at all times.

(b) The following limitations establish the quantity or quality of pollutants or pollutant properties, controlled by this section, resulting from the use of wet barking operations, which may be discharged by a point source subject to the provisions of this subpart. These limitations are in addition to the limitations set forth in paragraph (a) of this section and shall be calculated using the proportion of the mill's total production due to use of logs which are subject to such operations. Non-continuous dischargers shall not be subject to the maximum day and average of 30 consecutive days limitations, but shall be subject to annual average effluent limitations:

SUBPART A

[BPT effluent limitations]

Pollutant or pollutant property	Kg/kkg (or pounds per 1,000 lb) of product		
	Continuous dischargers		Non-continuous dischargers (annual average)
	Maximum for any 1 day	Average of daily values for 30 consecutive days	
BOD5	3.2	1.7	0.95
TSS	6.9	3.75	2.0
pH	(1)	(1)	(1)

1 Within the range of 5.0 to 9.0 at all times.

(c) The following limitations establish the quantity or quality of pollutants or pollutant parameters, controlled by this section, resulting from the use of log washing or chip washing operations, which may be discharged by a point source subject to the provisions of this subpart. These limitations are in addition to the limitations set forth in paragraph (a) of this section and shall be calculated using the proportion of the mill's total production due to use of logs and/or chips which are subject to such operations. Non-continuous dischargers shall not be subject to the maximum day and average of 30 consecutive days limitations, but shall be subject to the annual average effluent limitations:

SUBPART A

[BPT effluent limitations]

Pollutant or pollutant property	Kg/kkg (or pounds per 1,000 lb) of product		
	Continuous dischargers		Non-continuous dischargers (annual average)
	Maximum for any 1 day	Average of daily values for 30 consecutive days	
BOD5	0.35	0.2	0.1
TSS	0.70	0.4	0.2
pH	(1)	(1)	(1)

[1] Within the range of 5.0 to 9.0 at all times.

(d) The following limitations establish the quantity or quality of pollutants or pollutant properties, controlled by this section, resulting from the use of log flumes or log ponds, which may be discharged by a point source subject to the provisions of this subpart. These limitations are in addition to the limitations set forth in paragraph (a) of this section and shall be calculated using the proportion of the mill's total production due to use of logs which are subject to such operations. Non-continuous dischargers shall not be subject to the maximum day and average of 30 consecutive days limitations but shall be subject to the annual average effluent limitations:

SUBPART A

[BPT effluent limitations]

Pollutant or pollutant property	Kg/kkg (or pounds per 1,000 lb) of product		
	Continuous dischargers		Non-continuous dischargers (annual average)
	Maximum for any 1 day	Average of daily values for 30 consecutive days	
BOD5	0.6	0.35	0.2
TSS	1.45	0.8	0.4
pH	(1)	(1)	(1)

[1] Within the range of 5.0 to 9.0 at all times.

§ 430.13 Effluent limitations guidelines representing the degree of effluent reduction attainable by the application of the best conventional pollutant control technology (BCT).

Except as provided in 40 CFR 125.30 through 125.32, any existing point source subject to this subpart shall achieve the following effluent limitations representing the degree of effluent reduction attainable by the application of the best conventional pollutant control technology (BCT): The limitations shall be the same as those specified for conventional pollutants (which are defined in 40 CFR 401.16) in § 430.12 of this subpart for the best practicable control technology currently available (BPT).

§ 430.14 Effluent limitations representing the degree of effluent reduction attainable by the application of the best available technology economically achievable (BAT).

Except as provided in 40 CFR 125.30 through 125.32, any existing point source subject to this subpart where chlorophenolic-containing biocides are used must achieve the following effluent limitations representing the degree of effluent reduction attainable by the application of the best available technology economically achievable (BAT). Non-continuous dischargers shall not be subject to the maximum day mass limitations in kg/kkg (lb/1000 lb) but shall be subject to concentration limitations. Concentration limitations are only applicable to non-continuous dischargers. Permittees not using chlorophenolic-containing biocides must certify to the permit-issuing authority that they are not using these biocides:

SUBPART A

[BAT effluent limitations]

Pollutant or pollutant property	Maximum for any 1 day	
	Kg/kkg (or pounds per 1,000 lb) of product	Milligrams/liter
Pentachlorophenol	0.0025	(0.011)(55.1)/y
Trichlorophenol	0.016	(0.068)(55.1)/y
y = wastewater discharged in kgal per ton of product.		

§ 430.15 New source performance standards (NSPS).

Any new source subject to this subpart must achieve the following new source performance standards (NSPS), except that non-continuous dischargers shall not be subject to the maximum day and average of 30 consecutive days effluent limitations for BOD5 and TSS, but shall be subject to annual average effluent limitations. Also, for non-continuous dischargers, concentration limitations (mg/l) shall apply, where provided. Concentration limitations will only apply to non-continuous dischargers. Only facilities where chlorophenolic-containing biocides are used shall be subject to pentachlorophenol and trichlorophenol limitations. Permittees not using chlorophenolic-containing biocides must certify to the permit-issuing authority that they are not using these biocides:

SUBPART A

[NSPS]

Pollutant or pollutant property	Kg/kkg (or pounds per 1,000 lb) of product		
	Continuous dischargers		Non-continuous dischargers (annual average)
	Maximum for any 1 day	Average of daily values for 30 consecutive days	
BOD5	15.6	8.4	4.4
TSS	27.3	14.3	7.5
pH	(1)	(1)	(1)

	Maximum for any 1 day	
	Kg/kkg (or pounds per 1,000 lb) of product	Milligrams/liter
Pentachlorophenol	0.0025	(0.012)(50.7)/y
Trichlorophenol	0.016	(0.074)(50.7)/y
y = wastewater discharged in kgal per ton at all times.		

1 Within the range of 5.0 to 9.0 at all times.

§ 430.16 Pretreatment standards for existing sources (PSES).

Except as provided in 40 CFR 403.7 and 403.13, any existing source subject to this subpart that introduces pollutants into a publicly owned treatment works must: comply with 40 CFR part 403; and achieve the following pretreatment standards for existing sources (PSES) if it uses chlorophenolic-containing biocides. Permittees not using chlorophenolic-containing biocides must certify to the permit-issuing authority that they are not using these biocides. PSES must be attained on or before July 1, 1984:

SUBPART A

[PSES]

Pollutant or pollutant property	Maximum for any 1 day	
	Milligrams/liter (mg/l)	Kg/kkg (or pounds per 1,000 lb) of product [a]
Pentachlorophenol	(0.011)(55.1)/y	0.0025
Trichlorophenol	(0.082)(55.1)/y	0.019
y = wastewater discharged in kgal per ton of product.		

[a] The following equivalent mass limitations are provided as guidance in cases when POTWs find it necessary to impose mass effluent limitations.

§ 430.17 Pretreatment standards for new sources (PSNS).

Except as provided in 40 CFR 403.7, any new source subject to this subpart that introduces pollutants into a publicly owned treatment works must: comply with 40 CFR part 403; and achieve the following pretreatment standards for new sources (PSNS) if it uses chlorophenolic-containing biocides. Permittees not using chlorophenolic-containing biocides must certify to the permit-issuing authority that they are not using these biocides:

SUBPART A

[PSNS]

Pollutant or pollutant property	Maximum for any 1 day	
	Milligrams/liter (mg/l)	Kg/kkg (or pounds per 1,000 lb) of product [a]
Pentachlorophenol	(0.012)(50.7)/y	0.0025
Trichlorophenol	(0.089)(50.7)/y	0.019
y = wastewater discharged in kgal per ton of product.		

[a] The following equivalent mass limitations are provided as guidance in cases when POTWs find it necessary to impose mass effluent limitations.

Subpart B—Bleached Papergrade Kraft and Soda Subcategory

§ 430.20 Applicability; description of the bleached papergrade kraft and soda subcategory.

The provisions of this subpart apply to discharges resulting from: the production of market pulp at bleached kraft mills; the integrated production of paperboard, coarse paper, and tissue paper at bleached kraft mills; the integrated production of pulp and fine papers at bleached kraft mills; and the integrated production of pulp and paper at soda mills.

§ 430.21 Specialized definitions.

(a) The general definitions, abbreviations, and methods of analysis set forth in 40 CFR part 401 and § 430.01 of this part apply to this subpart.

(b) *Baseline BAT limitations or NSPS* means the BAT limitations specified in § 430.24(a) (1) or (2), as applicable, and the NSPS specified in § 430.25(b) (1) or (2), as applicable, that apply to any direct discharger that is not ''enrolled'' in the ''Voluntary Advanced Technology Incentives Program.''

(c) *Enroll* means to notify the permitting authority that a mill intends to participate in the ''Voluntary Advanced Technology Incentives Program.'' A mill can enroll by indicating its intention to participate in the program either as part of its application for a National Pollutant Discharge Elimination System (NPDES) permit, or through separate correspondence to the permitting authority as long as the mill signs the correspondence in accordance with 40 CFR 122.22.

(d) *Existing effluent quality* means the level at which the pollutants identified in § 430.24(a)(1) are present in the effluent of a mill ''enrolled'' in the ''Voluntary Advanced Technology Incentives Program.''

(e) *Kappa number* is a measure of the lignin content in unbleached pulp, determined after pulping and prior to bleaching.

(f) *Voluntary Advanced Technology Incentives Program* is the program established under § 430.24(b) (for existing direct dischargers) and § 430.25(c) (for new direct dischargers) whereby participating mills agree to accept enforceable effluent limitations and conditions in their NPDES permits that are more stringent than the ''baseline BAT limitations or NSPS'' that would otherwise apply, in exchange for regulatory- and enforcement-related rewards and incentives.

§ 430.22 Effluent limitations representing the degree of effluent reduction attainable by the application of the best practicable control technology currently available (BPT).

(a) Except as provided in 40 CFR 125.30 through 125.32, any existing point source subject to this subpart must achieve the following effluent limitations representing the degree of effluent reduction attainable by the application of the best practicable control technology currently available (BPT):

SUBPART B

[BPT effluent limitations for bleached kraft facilities where market pulp is produced]

Pollutant or pollutant parameter	Kg/kkg (or pounds per 1,000 lb) of product		
	Continuous dischargers		Non-continuous dischargers (annual average)
	Maximum for any 1 day	Average of daily values for 30 consecutive days	
BOD5	15.45	8.05	4.52
TSS	30.4	16.4	9.01
pH	(1)	(1)	(1)

1 Within the range of 5.0 to 9.0 at all times.

SUBPART B

[BPT effluent limitations for bleached kraft facilities where paperboard, coarse paper, and tissue paper are produced]

Pollutant or pollutant parameter	Kg/kkg (or pounds per 1,000 lb) of product		
	Continuous dischargers		Non-continuous dischargers (annual average)
	Maximum for any 1 day	Average of daily values for 30 consecutive days	
BOD5	13.65	7.1	3.99
TSS	24.0	12.9	7.09
pH	(1)	(1)	(1)

1 Within the range of 5.0 to 9.0 at all times.

SUBPART B

[BPT effluent limitations for bleached kraft facilities where pulp and fine papers are produced]

Pollutant or pollutant parameter	Kg/kkg (or pounds per 1,000 lb) of product		
	Continuous dischargers		Non-continuous dischargers (annual average)
	Maximum for any 1 day	Average of daily values for 30 consecutive days	
BOD5	10.6	5.5	3.09
TSS	22.15	11.9	6.54
pH	(1)	(1)	(1)

1 Within the range of 5.0 to 9.0 at all times.

SUBPART B

[BPT effluent limitations for soda facilities where pulp and paper are produced]

Pollutant or pollutant parameter	Kg/kkg (or pounds per 1,000 lb) of product		
	Continuous dischargers		Non-continuous dischargers (annual average)
	Maximum for any 1 day	Average of daily values for 30 consecutive days	
BOD5	13.7	7.1	3.99
TSS	24.5	13.2	7.25
pH	(1)	(1)	(1)

1 Within the range of 5.0 to 9.0 at all times.

(b) The following limitations establish the quantity or quality of pollutants or pollutant properties, controlled by this section, resulting from the use of wet barking operations, which may be discharged by a point source subject to the provisions of this subpart. These limitations are in addition to the limitations set forth in paragraph (a) of this section and shall be calculated using the proportion of the mill's total production due to use of logs which are subject to such operations:

SUBPART B

[BPT effluent limitations for bleached kraft facilities where market pulp is produced]

Pollutant or pollutant parameter	Kg/kkg (or pounds per 1,000 lb) of product		
	Continuous dischargers		Non-continuous discharges (annual average)
	Maximum for any 1 day	Average of daily values for 30 consecutive days	
BOD5	2.3	1.2	0.70
TSS	5.3	2.85	1.55
pH	(1)	(1)	(1)

1 Within the range of 5.0 to 9.0 at all times.

SUBPART B

[BPT effluent limitations for bleached kraft facilities where paperboard, coarse paper, and tissue paper are produced]

Pollutant or pollutant parameter	Kg/kkg (or pounds per 1,000 lb) of product		
	Continuous dischargers		Non-continuous discharges (annual average)
	Maximum for any 1 day	Average of daily values for 30 consecutive days	
BOD5	2.25	1.2	0.65
TSS	5.75	3.1	1.70
pH	(1)	(1)	(1)

11 Within the range of 5.0 to 9.0 at all times.

SUBPART B

[BPT effluent limitations for bleached kraft facilities where pulp and fine papers are produced]

Pollutant or pollutant parameter	Kg/kkg (or pounds per 1,000 lb) of product		
	Continuous dischargers		Non-continuous discharges (annual average)
	Maximum for any 1 day	Average of daily values for 30 consecutive days	
BOD5	1.95	1.0	0.55
TSS	5.3	2.85	1.55
pH	(1)	(1)	(1)

1 Within the range of 5.0 to 9.0 at all times.

SUBPART B

[BPT effluent limitations for soda facilities where pulp and papers are produced]

Pollutant or pollutant parameter	Kg/kkg (or pounds per 1,000 lb) of product		
	Continuous dischargers		Non-continuous discharges (annual average)
	Maximum for any 1 day	Average of daily values for 30 consecutive days	
BOD5	2.05	1.1	0.60

SUBPART B—Continued

[BPT effluent limitations for soda facilities where pulp and papers are produced]

Pollutant or pollutant parameter	Kg/kkg (or pounds per 1,000 lb) of product		
	Continuous dischargers		Non-continuous dischargers (annual average)
	Maximum for any 1 day	Average of daily values for 30 consecutive days	
TSS	5.25	2.8	1.55
pH	(1)	(1)	(1)

1 Within the range of 5.0 to 9.0 at all times.

(c) The following limitations establish the quantity or quality of pollutants or pollutant parameters, controlled by this section, resulting from the use of log washing or chip washing operations, which may be discharged by a point source subject to the provisions of this subpart. These limitations are in addition to the limitations set forth in paragraph (a) of this section and shall be calculated using the proportion of the mill's total production due to use of logs and/or chips which are subject to such operations:

SUBPART B

[BPT effluent limitations for bleached kraft facilities where market pulp is produced]

Pollutant or pollutant parameter	Kg/kkg (or pounds per 1,000 lb) of product		
	Continuous dischargers		Non-continuous dischargers (annual average)
	Maximum for any 1 day	Average of daily values for 30 consecutive days	
BOD5	0.2	0.1	0.1
TSS	0.6	0.3	0.15
pH	(1)	(1)	(1)

1 Within the range of 5.0 to 9.0 at all times..

SUBPART B

[BPT effluent limitations for bleached kraft facilities where paperboard, coarse paper, and tissue paper are produced]

Pollutant or pollutant parameter	Kg/kkg (or pounds per 1,000 lb) of product		
	Continuous dischargers		Non-continuous dischargers (annual average)
	Maximum for any 1 day	Average of daily values for 30 consecutive days	
BOD5	0.25	0.15	0.05
TSS	0.65	0.35	0.20
pH	(1)	(1)	(1)

1 Within the range of 5.0 to 9.0 at all times.

Subpart B

[BPT effluent limitations for bleached kraft facilities where pulp and fine papers are produced]

Pollutant or pollutant parameter	Kg/kkg (or pounds per 1,000 lb) of product		
	Continuous dischargers		Non-continuous dischargers (annual average)
	Maximum for any 1 day	Average of daily values for 30 consecutive days	
BOD5	0.2	0.1	0.05
TSS	0.55	0.3	0.15

Subpart B—Continued

[BPT effluent limitations for bleached kraft facilities where pulp and fine papers are produced]

Pollutant or pollutant parameter	Kg/kkg (or pounds per 1,000 lb) of product		
	Continuous dischargers		Non-continuous dischargers (annual average)
	Maximum for any 1 day	Average of daily values for 30 consecutive days	
pH	(1)	(1)	(1)

1 Within the range of 5.0 to 9.0 at all times.

SUBPART B

[BPT effluent limitations for soda facilities where pulp and papers are produced]

Pollutant or pollutant parameter	Kg/kkg (or pounds per 1,000 lb) of product		
	Continuous dischargers		Non-continuous dischargers (annual average)
	Maximum for any 1 day	Average of daily values for 30 consecutive days	
BOD5	0.15	0.1	0.05
TSS	0.5	0.25	0.15
pH	(1)	(1)	(1)

1 Within the range of 5.0 to 9.0 at all times.

(d) The following limitations establish the quantity or quality of pollutants or pollutant properties, controlled by this section, resulting from the use of log flumes or log ponds, which may be discharged by a point source subject to the provisions of this subpart. These limitations are in addition to the limitations set forth in paragraph (a) of this section and shall be calculated using the proportion of the mill's total production due to use of logs which are subject to such operations:

SUBPART B

[BPT effluent limitations for bleached kraft facilities where market pulp is produced]

Pollutant or pollutant parameter	Kg/kkg (or pounds per 1,000 lb) of product		
	Continuous dischargers		Non-continuous dischargers (annual average)
	Maximum for any 1 day	Average of daily values for 30 consecutive days	
BOD5	0.4	0.2	0.15
TSS	1.15	0.6	0.35
pH	(1)	(1)	(1)

1 Within the range of 5.0 to 9.0 at all times.

SUBPART B

[BPT effluent limitations for bleached kraft facilities where paperboard, coarse paper, and tissue paper are produced]

Pollutant or pollutant parameter	Kg/kkg (or pounds per 1,000 lb) of product		
	Continuous dischargers		Non-continuous dischargers (annual average)
	Maximum for any 1 day	Average of daily values for 30 consecutive days	
BOD5	0.45	0.25	0.10
TSS	1.25	0.7	0.35

SUBPART B—Continued

[BPT effluent limitations for bleached kraft facilities where paperboard, coarse paper, and tissue paper are produced]

Pollutant or pollutant parameter	Kg/kkg (or pounds per 1,000 lb) of product		
	Continuous dischargers		Non-continuous dischargers (annual average)
	Maximum for any 1 day	Average of daily values for 30 consecutive days	
pH	(1)	(1)	(1)

1 Within the range of 5.0 to 9.0 at all times.

SUBPART B

[BPT effluent limitations for bleached kraft facilities where pulp and fine papers are produced]

Pollutant or pollutant parameter	Kg/kkg (or pounds per 1,000 lb) of product		
	Continuous dischargers		Non-continuous dischargers (annual average)
	Maximum for any 1 day	Average of daily values for 30 consecutive days	
BOD5	0.35	0.2	0.10
TSS	1.15	0.6	0.30
pH	(1)	(1)	(1)

1 Within the range of 5.0 to 9.0 at all times.

SUBPART B

[BPT effluent limitations for soda facilities where pulp and papers are produced]

Pollutant or pollutant parameter	Kg/kkg (or pounds per 1,000 lb) of product		
	Continuous dischargers		Non-continuous dischargers (annual average)
	Maximum for any 1 day	Average of daily values for 30 consecutive days	
BOD5	0.3	0.2	0.10
TSS	1.1	0.55	0.35
pH	(1)	(1)	(1)

1 Within the range of 5.0 to 9.0 at all times.

§ 430.23 Effluent limitations representing the degree of effluent reduction attainable by the application of the best conventional pollutant control technology (BCT).

Except as provided in 40 CFR 125.30 through 125.32, any existing point source subject to this subpart must achieve the following effluent limitations representing the degree of effluent reduction attainable by the application of the best conventional pollutant control technology (BCT). The limitations shall be the same as those specified in § 430.22 of this subpart for the best practicable control technology currently available (BPT).

§ 430.24 Effluent limitations representing the degree of effluent reduction attainable by the application of best available technology economically achievable (BAT).

Except as provided in 40 CFR 125.30 through 125.32, any existing point source subject to this subpart must achieve the following effluent limitations representing the degree of effluent reduction attainable by the application of the best available technology economically achievable (BAT).

(a) Except as provided in paragraph (b) of this section—

(1) The following effluent limitations apply with respect to each fiber line that does not use an exclusively TCF bleaching process, as disclosed by the discharger in its NPDES permit application under 40 CFR 122.21(g)(3) and certified under 40 CFR 122.22:

SUBPART B

Pollutant or pollutant property	BAT effluent limitations	
	Maximum for any 1 day	Monthly average
TCDD	<ML [a]	([b])
TCDF	31.9 [c]	([b])
Chloroform	6.92 [d]	4.14 ([d])
Trichlorosyringol	<ML [a]	([b])
3,4,5-trichlorocatechol	<ML [a]	([b])
3,4,6-trichlorocatechol	<ML [a]	([b])
3,4,5-trichloroguaiacol	<ML [a]	([b])
3,4,6-trichloroguaiacol	<ML [a]	([b])
4,5,6-trichloroguaiacol	<ML [a]	([b])
2,4,5-trichlorophenol	<ML [a]	([b])
2,4,6-trichlorophenol	<ML [a]	([b])
Tetrachlorocatechol	<ML [a]	([b])
Tetrachloroguaiacol	<ML [a]	([b])
2,3,4,6-tetrachlorophenol	<ML [a]	([b])
Pentachlorophenol	<ML [a]	([b])

	Continuous dischargers		Non-continuous dischargers
	Maximum for any 1 day (kg/kkg)	Monthly average (kg/kkg)	Annual average (kg/kkg)
AOX	0.951	0.623	0.512
COD	([e])	([e])	([e])

[a] "<ML" means less than the minimum level specified in § 430.01(i) for the particular pollutant.
[b] This regulation does not specify this type of limitation for this pollutant; however, permitting authorities may do so as appropriate.
[c] Picograms per liter.
[d] Grams per 1,000 kilograms (g/kkg).
[e] [Reserved].

(2) The following effluent limitations apply with respect to each fiber line that uses exclusively TCF bleaching processes, as disclosed by the discharger in its NPDES permit application under 40 CFR 122.21(g)(3) and certified under 40 CFR 122.22:

SUBPART B

Pollutant or pollutant property	BAT effluent limitations (TCF)			
	Continuous dischargers		Non-continuous dischargers	
	Maximum for any 1 day	Monthly average	Maximum for any 1 day	Annual average
	kg/kkg(or pounds per 1,000 lb) of product			
AOX	<ML [a]	([b])	<ML [a]	([b])
COD	([c])	([c])	([c])	([c])

[a] "<ML" means less than the minimum level specified in § 430.01(i) for the particular pollutant.
[b] This regulation does not specify this type of limitation for this pollutant; however, permitting authorities may do so as appropriate.
[c] [Reserved].

(b) The following limitations apply with respect to each fiber line enrolled in the Voluntary Advanced Technology Incentives Program:

(1) Stage 1 Limitations: Numeric limitations that are equivalent to the discharger's existing effluent quality or the discharger's current effluent limitations established under CWA section 301(b)(2), whichever are more stringent, for the pollutants identified in paragraph (a)(1) of this section (with the exception of COD). For AOX, the permitting authority must determine existing effluent quality for each fiber line enrolled in the Voluntary Advanced Technology Incentives Program at the end of the pipe based on loadings attributable to that fiber line. For the remaining pollutants, with the exception of COD, the permitting authority must determine existing effluent quality for each fiber line enrolled in the Voluntary Advanced Technology Incentives Program at the point where the wastewater containing those pollutants leaves the bleach plant. These limitations must be recalculated each time the NPDES permit of a discharger enrolled in the Voluntary Advanced Technology Incentives Program is reissued, up to:

(i) April 15, 2004 for all pollutants in paragraph (a)(1) of this section except AOX; and

(ii) The date specified in paragraph (b)(4)(ii) of this section for achieving the applicable AOX limitation specified in paragraph (b)(4)(i).

(2) Best Professional Judgment Milestones: Narrative or numeric limitations and/or special permit conditions, as appropriate, established by the permitting authority on the basis of his or her best professional judgment that reflect reasonable interim milestones toward achievement of the effluent limitations specified in paragraphs (b)(3) and (b)(4) of this section, as applicable.

(3) Six-year Milestones: By April 15, 2004 all dischargers enrolled in the Voluntary Advanced Technology Incentives Program must achieve the following:

(i) The effluent limitations specified in paragraph (a)(1) of this section, except that, with respect to AOX, dischargers subject to Tier I effluent limitations specified in paragraph (b)(4)(i) of this section must achieve the AOX limitation specified in that paragraph; or

(ii) For dischargers that use exclusively TCF bleaching processes as of April 15, 2004, the effluent limitations specified in paragraph (a)(2) of this section.

(4)(i) Stage 2 Limitations:

ULTIMATE VOLUNTARY ADVANCED TECHNOLOGY INCENTIVES PROGRAM BAT LIMITATIONS

Tier	Kappa number (annual average)	Filtrate recycling	Total pulping area condensate, evaporator condensate, and bleach plant wastewater flow (annual average)	AOX (kg/kkg)			
				Non-TCF [a]		TCF	
				Maximum for any 1 day	Annual average	Maximum for any 1 day	Annual average
Tier I	20 (softwood furnish) 13 (Hardwood furnish)	([b])	N/A	0.58	0.26	<ML [c]	([d])
Tier II	NA	([b])	10 cubic meters/kkg	0.23	0.10	<ML [c]	([d])
Tier III	N/A	([b])	5 cubic meters/kkg	0.11	0.5	<ML [c]	([d])

[a] Non-TCF: Pertains to any fiber line that does not use exclusively TCF bleaching processes.
[b] Complete recycling to the chemical recovery system of all filtrates generated prior to bleaching. Under Tier I, this includes all filtrates up to the point where kappa number is measures.
[c] "<ML" means less than the minimum level specified in § 430.01(i) for the particular pollutant.
[d] This regulation does not specify this type of limitation for this pollutant; however, permitting authorities may do so as appropriate.
AN/A means "not applicable."

(ii) Deadlines. (A) A discharger enrolled in Tier I of the Voluntary Advanced Technology Incentives Program must achieve for Tier I limitations in paragraph (b)(4)(i) of this section by April 15, 2004.

(B) A discharger enrolled in Tier II of the Voluntary Advanced Technology Incentives Program must achieve the Tier II limitations in paragraph (b)(4)(i) of this section by April 15, 2009.

(C) A discharger enrolled in Tier III of the Voluntary Advanced Technology Incentives Program must achieve the Tier III limitations in paragraph (b)(4)(i) of this section by April 15, 2014.

(c) [RESERVED].

(d) The following additional effluent limitations apply to all dischargers subject to this section in accordance with the previous subcategorization scheme unless the discharger certifies to the permitting authority that it is not using these compounds as biocides. Also, for non-continuous dischargers, concentration limitation (mg/l) shall apply. Concentration limitations will only apply to non-continuous dischargers:

SUBPART B

[Supplemental BAT effluent limitations for bleached kraft facilities where market pulp is produced]

Pullutant or pollutant property	Maximum for any 1 day	
	kg/kkg (or pounds per 1,000 lb) of product	Milligrams/liter
Pentachlorophenol	0.0019	(0.011)(41.6)/y
Trichlorophenol	0.012	(0.068)(41.6)/y
y = wastewater discharged in kgal per ton product.		

SUBPART B

[Supplemental BAT effluent limitations for bleached kraft facilities where paperboard, coarse paper, and tissue paper are produced]

Pollutant or pollutant property	Maximun for any 1 day	
	kg/kkg (or pounds per 1,000 lb) of product	Milligrams/liter
Pentachlorophenol	0.0016	(0.11)(35.4)/y
Trichlorophenol	0.010	(0.068)(35.4)/y
y = wastewater discharged in kgal per ton of product.		

SUBPART B

[Supplemental BAT effluent limitations for bleached kraft facilities where pulp and fine papers are produced and soda facilities where pulp and paper are produced]

Pollutant or pollutant property	Maximum for any 1 day	
	kg/kkg (or pounds per 1,000 lb) of product	Milligrams/liter
Pentachlorophenol	0.0014	(0.011) (30.9)/y
Trichlorophenol	0.0088	(0.068) (30.9)/y
y = wastewater discharged in kgal per ton of product.		

(e) Pursuant to 40 CFR 122.44(i) and 122.45(h), a discharger must demonstrate compliance with the effluent limitations in paragraph (a)(1) or (b)(3) of this section, as applicable, by monitoring for all pollutants (except for AOX and COD) at the point where the wastewater containing those pollutants leaves the bleach plant. The permitting authority may impose effluent limitations and/or monitoring requirements on internal wastestreams for any other pollutants covered in this section as appropriate under 40 CFR 122.44(i) and 122.45(h). In addition, a discharger subject to a limitation on total pulping area condensate, evaporator condensate, and bleach plant wastewater flow under paragraph (b)(4)(i) of this section, for Tier II and Tier III, must demonstrate compliance with that limitation by establishing and maintaining flow measurement equipment to monitor these flows at the point or points where they leave the pulping area, evaporator area, and bleach plant.

§ 430.25 New source performance standards (NSPS).

New sources subject to this subpart must achieve the following new source performance standards (NSPS), as applicable.

(a) The following standards apply to each new source that commenced discharge after June 15, 1988 and before June 15, 1998, provided that the new source was constructed to meet these standards:

SUBPART B

[1982 New Source Performance Standards for bleached kraft facilities where market pulp is produced]

Pollutant or pollutant property	Continuous dischargers		Non-continuous dischargers
	Maximum for any 1 day	Average of daily values for 30 consecutive days	Annual average
	kg/kkg (or pounds per 1,000 lb) of product		
BOD5	10.3	5.5	2.88
TSS	18.2	9.5	5.00
pH	(1)	(1)	(1)

1 Within the range of 5.0 to 9.0 at all times.

SUBPART B

[1982 New Source Performance Standards for bleached kraft facilities where paperboard, coarse paper, and tissue paper are produced]

Pollutant or pollutant property	Continuous dischargers		Non-continuous dischargers
	Maximum for any 1 day	Average of daily values for 30 consecutive days	Annual average
	kg/kkg (or pounds per 1,000 lb) of product		
BOD5	8.5	4.6	2.41
TSS	14.6	7.6	4.00
pH	(1)	(1)	(1)

1 Within the range of 5.0 to 9.0 at all times.

SUBPART B

[1982 New Source Performance Standards for bleached kraft facilities where pulp and fine papers are produced and soda facilities where pulp and paper are produced]

Pollutant or pollutant property	Continuous dischargers		Non-continuous dischargers
	Maximum for any 1 day	Average of daily values for 30 consecutive days	Annual average
	kg/kkg (or pounds per 1,000 lb) of product		
BOD5	5.7	3.1	1.62
TSS	9.1	4.8	2.53
pH	(1)	(1)	(1)

1 Within the range of 5.0 to 9.0 at all times.

(b) Except as provided in paragraph (c) of this section—

(1) The following standards apply with respect to each new source fiber line that does not use an exclusively TCF bleaching process, as disclosed by the discharger in its NPDES permit application under 40 CFR 122.21(g)(3) and certified under 40 CFR 122.22, and that commences discharge after June 15, 1998:

SUBPART B

Pollutant or pollutant property	NSPS	
	Maximum for any 1 day	Monthly average
TCDD	<ML [a]	([b])
TCDF	31.9 [c]	([b])
Chloroform	6.92 [d]	4.14 [d]
Trichlorosyringol	<ML [a]	([b])
3,4,5-trichlorocatechol	<ML [a]	([b])
3,4,6-trichlorocatechol	<ML [a]	([b])
3,4,5-trichloroguaiacol	<ML [a]	([b])
3,4,6-trichloroguaiacol	<ML [a]	([b])
4,5,6-trichloroguaiacol	<ML [a]	([b])
2,4,5-trichlorophenol	<ML [a]	([b])
2,4,6-trichlorophenol	<ML [a]	([b])
Tetrachlorocatechol	<ML [a]	([b])
Tetrachloroguaiacol	<ML [a]	([b])
2,3,4,6-tetrachlorophenol	<ML [a]	([b])
Pentachlorophenol	<ML [a]	([b])

	Continuous dischargers		Non-continuous dischargers
	Maximum for any 1 day (kg/kkg)	Monthly average (kg/kkg)	Annual average (kg/kkg)
AOX	0.476	0.272	0.208
BOD5	4.52	2.41	1.73
TSS	8.47	3.86	2.72
pH	(1)	(1)	(1)
COD	([e])	([e])	([e])

[a] "<ML" means less than the minimum level specified in § 430.01(i) for the particular pollutant.
[b] This regulation does not specify this type of limitation for this pollutant; however, permitting authorities may do so as appropriate.
[c] Picograms per liter.
[d] Grams per 1,000 kilograms(g/kkg).
[e] [Reserved].
1 Within the range of 5.0 to 9.0 at all times.

(2) The following standards apply with respect to each new source fiber line that uses exclusively TCF bleaching processes, as disclosed by the discharger in its NPDES permit application under 40 CFR 122.21(g)(3) and certified under 40 CFR 122.22, and that commences discharge after June 15, 1998:

SUBPART B

Pollutant or pollutant property	NSPS (TCF)			
	Continuous dischargers		Non-continuous dischargers	
	Maximum for any 1 day	Monthly average	Maximum for any 1 day	Annual average
AOX [d]	<ML [a]	([b])	<ML [a]	([b])
BOD5 [d]	4.52	2.41	N/A	1.73
TSS [d]	8.47	3.86	N/A	2.72
pH	([1])	([1])	([1])	([1])
COD	([c])	([c])	([c])	([c])

[a] "<ML" means less than the minimum level specified in § 430.01(i) for the particular pollutant.
[b] This regulation does not specify this type of limitation for this pollutant; however, permitting authorities may do so as appropriate.
[c] [Reserved].
[d] Kilograms per 1,000 kilograms (kg/kkg).
[1] Within the range of 5.0 to 9.0 at all times.

(c) With respect to each new source fiber line that is enrolled in the Voluntary Advanced Technology Incentives Program, dischargers subject to this section must achieve:

(1) The standards specified in paragraph (b)(1) of this section (except for AOX) or paragraph (b)(2) of this section, as applicable; and

(2) Standards for filtrates, flow, and AOX:

ULTIMATE VOLUNTARY ADVANCED TECHNOLOGY INCENTIVES PROGRAM NSPS

Tier	Filtrate recycling	Total pulping area condensate, evaporator condensate, and bleach plant wastewater flow (annual average)	AOX (kg/kkg)			
			Non-TCF [a]		TCF	
			Maximum for any 1 day	Annual average	Maximum for any 1 day	Annual average
Tier II	([b])	10 cubic meters/kkg	0.23	0.10	<ML [c]	([d])
Tier III	([b])	5 cubic meters/kkg	0.11	0.05	<ML [c]	([d])

[a] Non-TCF: Pertains to any fiber line that does not use exclusively TCF bleaching processes.
[b] Complete recycling to the chemical recovery system of all filtrates generated prior to bleaching.
[c] "<ML" means less than the minimum level specified in § 430.01(i) for the particular pollutant.
[d] This regulation does not specify this type of limitation for this pollutant; however, permitting authorities may do so as appropriate.

(d) These additional standards apply to all new sources, regardless of when they commenced discharge, in accordance with the previous subcategorization scheme unless the discharger certifies to the permitting authority that it is not using these compounds as biocides. Also, for non-continuous dischargers, concentration limitations (mg/l) shall apply. Concentration limitations will only apply to non-continuous dischargers:

SUBPART B

[Supplemental NSPS for bleached kraft facilities where market pulp is produced]

Pollutant or pollutant property	Maximum for any 1 day	
	kg/kkg (or pounds per 1,000 lb) of product	Milligrams/liter
Pentachlorophenol	0.0019	(0.013)(36.6)/y
Trichlorophenol	0.012	(0.077)(36.6)/y
y = wastewater discharged in kgal per ton of product.		

SUBPART B

[Supplemental NSPS for bleached kraft facilities where paperboard, coarse paper, and tissue paper are produced]

Pollutant or pollutant property	Maximum for any 1 day	
	kg/kkg (or pounds per 1,000 lb) of product	Milligrams/liter
Pentachlorophenol	0.0016	(0.012)(31.7)/y

SUBPART B—Continued

[Supplemental NSPS for bleached kraft facilities where paperboard, coarse paper, and tissue paper are produced]

Pollutant or pollutant property	Maximum for any 1 day	
	kg/kkg (or pounds per 1,000 lb) of product	Milligrams/liter
Trichlorophenol	0.010	(0.076)(31.7)/y
y = wastewater discharged in kgal per ton of product.		

SUBPART B

[Supplemental NSPS for bleached kraft facilities where pulp and fine papers are produced and soda facilities where pulp and paper are produced]

Pollutant or pollutant property	Maximum for any 1 day	
	kg/kkg (or pounds per 1,000 lb) of product	Milligrams/liter
Pentachlorophenol	0.0014	(0.014)(25.1)/y
Trichlorophenol	0.0088	(0.084)(25.1)/y
y = wastewater discharged in kgal per ton of product.		

(e) Pursuant to 40 CFR 122.44(i) and 122.45(h), a discharger must demonstrate compliance with the limitations in paragraph (b)(1) or (c)(1) of this section, as applicable, by monitoring for all pollutants (except for AOX, COD, BOD5, TSS, and pH) at the point where the wastewater containing those pollutants leaves the bleach plant. The permitting authority may impose effluent limitations and/or monitoring requirements on internal wastestreams for any other pollutants covered in this section as appropriate under 40 CFR 122.44(i) and 122.45(h). In addition, a discharger subject to a limitation on total pulping area condensate, evaporator condensate, and bleach plant wastewater flow under paragraph (c)(2) of this section must demonstrate compliance with that limitation by establishing and maintaining flow measurement equipment monitoring these flows at the point or points where they leave the pulping area, evaporator area, and the bleach plant.

§ 430.26 Pretreatment standards for existing sources (PSES).

Except as provided in 40 CFR 403.7 and 403.13, any existing source subject to this subpart that introduces pollutants into a publicly owned treatment works must: comply with 40 CFR part 403; and achieve the following pretreatment standards for existing sources (PSES).

(a)(1) The following pretreatment standards apply with respect to each fiber line operated by an indirect discharger subject to this section, unless the indirect discharger discloses to the pretreatment control authority in a report submitted under 40 CFR 403.12(b) that it uses exclusively TCF bleaching processes at that fiber line. These pretreatment standards must be attained on or before April 16, 2001:

SUBPART B

Pollutant or pollutant property	PSES	
	Maximum for any 1 day	Monthly average
TCDD	<ML [a]	([b])
TCDF	31.9 [c]	([b])
Chloroform	6.92 [d]	[d] 4.14
Trichlorosyringol	<ML [a]	([b])
3,4,5-trichlorocatechol	<ML [a]	([b])
3,4,6-trichlorocatechol	<ML [a]	([b])
3,4,5-trichloroguaiacol	<ML [a]	([b])
3,4,6-trichloroguaiacol	<ML [a]	([b])
4,5,6-trichloroguaiacol	<ML [a]	([b])
2,4,5-trichlorophenol	<ML [a]	([b])
2,4,6-trichlorophenol	<ML [a]	([b])
Tetrachlorocatechol	<ML [a]	([b])
Tetrachloroguaiacol	<ML [a]	([b])
2,3,4,6-tetrachlorophenol	<ML [a]	([b])
Pentachlorophenol	<ML [a]	([b])
AOX	2.64 [e]	[e] 1.41

[a] "<ML" means less than the minimum level specified in § 430.01(i) for the particular pollutant.
[b] This regulation does not specify this type of limitation for this pollutant; however, pretreatment control authorities may do so as appropriate.
[c] Picograms per liter.
[d] Grams per 1,000 kilograms (g/kkg).

[e] Kilograms per 1,000 kilograms (kg/kkg).

(2) The following pretreatment standards apply with respect to each fiber line operated by an indirect discharger subject to this section if the indirect discharger discloses to the pretreatment control authority in a report submitted under 40 CFR 403.12(b) that it uses exclusively TCF bleaching processes at that fiber line. These pretreatment standards must be attained on or before April 16, 2001:

SUBPART B

Pollutant or pollutant parameter	PSES (TCF)	
	Maximum for any 1 day	Monthly average
AOX	<ML [a]	([b])

[a] "<ML" means less than the minimum level specified in § 430.01(i) for the particular pollutant.
[b] This regulation does not specify this type of limitation for this pollutant; however, pretreatment control authorities may do so as appropriate.

(b) The following pretreatment standards apply to all indirect dischargers, in accordance with the previous subcategorization scheme. An indirect discharger is not required to meet these pretreatment standards if it certifies to the pretreatment control authority that it is not using these compounds as biocides. In cases when POTWs find it necessary to impose mass effluent limitations, equivalent mass limitations are provided as guidance:

SUBPART B

[Supplemental PSES for bleached kraft facilities where market pulp is produced]

Pollutant or pollutant property	Maximum for any 1 day	
	kg/kkg (or pounds per 1,000 lb) of product	Milligrams/liter
Pentachlorophenol	0.0019	(0.011)(41.6)/y
Trichlorophenol	0.014	(0.082)(41.6)/y
y = wastewater discharged in kgal per ton of product.		

SUBPART B

[Supplemental PSES for bleached kraft facilities where paperboard, coarse paper, and tissue paper are produced]

Pollutant or pollutant property	Maximum for any 1 day	
	kg/kkg (or pounds per 1,000 lb) of product	Milligrams/liter
Pentachlorophenol	0.0016	(0.011)(35.4)/y
Trichlorophenol	0.012	(0.082)(35.4)/y
y = wastewater discharged in kgal per ton of product.		

SUBPART B

[Supplemental PSES for bleached kraft facilities where pulp and fine papers are produced and soda facilities where pulp and paper are produced]

Pollutant or pollutant property	Maximum for any 1 day	
	kg/kkg (or pounds per 1,000 lb) of product	Milligrams/liter
Pentachlorophenol	0.0014	(0.011)(30.9)/y
Trichlorophenol	0.011	(0.082)(30.9)/y
y = wastewater discharged in kgal per ton of product		

(c) An indirect discharger must demonstrate compliance with the pretreatment standards in paragraph (a)(1) of this section by monitoring at the point where the wastewater containing those pollutants leaves the bleach plant.

§ 430.27 Pretreatment standards for new sources (PSNS).

Except as provided in 40 CFR 403.7, any new source subject to this subpart that introduces pollutants into a publicly owned treatment works must:

comply with 40 CFR part 403; and achieve the following pretreatment standards for new sources (PSNS).

(a)(1) The following pretreatment standards apply with respect to each fiber line that is a new source, unless the indirect discharger discloses to the pretreatment control authority in a report submitted under 40 CFR 403.12 that it uses exclusively TCF bleaching processes at that fiber line:

SUBPART B

Pollutant or pollutant property	PSNS	
	Maximum for any 1 day	Monthly average
TCDD	<ML [a]	([b])
TCDF	31.9 [c]	([b])
Chloroform	6.92 [d]	4.14 [d]
Trichlorosyringol	<ML [a]	([b])
3,4,5-trichlorocatechol	<ML [a]	([b])
3,4,6-trichlorocatechol	<ML [a]	([b])
3,4,5-trichloroguaiacol	<ML [a]	([b])
3,4,6-trichloroguaiacol	<ML [a]	([b])
4,5,6-trichloroguaiacol	<ML [a]	([b])
2,4,5-trichlorophenol	<ML [a]	([b])
2,4,6-trichlorophenol	<ML [a]	([b])
Tetrachlorocatechol	<ML [a]	([b])
Tetrachloroguaiacol	<ML [a]	([b])
2,3,4,6-tetrachlorophenol	<ML [a]	([b])
Pentachlorophenol	<ML [a]	([b])
AOX	1.16 [e]	0.814 [e]

[a] "<ML" means less than the minimum level specified in § 430.01(i) for the particular pollutant.
[b] This regulation does not specify this type of limitation for this pollutant; however, pretreatment control authorities may do so as appropriate.
[c] Picograms per liter.
[d] Grams per 1,000 kilograms (g/kkg).
[e] Kilograms per 1,000 kilograms (kg/kkg).

(2) The following pretreatment standards apply with respect to each new source fiber line operated by an indirect discharger subject to this section if the indirect discharger discloses to the pretreatment control authority in a report submitted under 40 CFR 403.12(b) that it uses exclusively TCF bleaching processes at that fiber line:

SUBPART B

Pollutant or pollutant parameter	PSNS (TCF)	
	Maximum for any 1 day	Monthly average
AOX	<ML [a]	([b])

[a] "<ML" means less than the minimum level specified in § 430.01(i) for the particular pollutant.
[b] This regulation does not specify this type of limitation for this pollutant; however, pretreatment control authorities may do so as appropriate.

(b) The following pretreatment standards apply to all new source indirect dischargers, regardless of when they commenced discharge, in accordance with the previous subcategorization scheme. An indirect discharger is not required to meet these pretreatment standards if it certifies to the pretreatment control authority that it is not using these compounds as biocides. In cases when POTWs find it necessary to impose mass-based effluent limitations, equivalent mass limitations are provided as guidance:

SUBPART B

[Supplemental PSNS for bleached kraft facilities where market pulp is produced]

Pollutant or pollutant property	Maximum for any 1 day	
	kg/kkg (or pounds per 1,000 lb) of product	Milligrams/liter
Pentachlorophenol	0.0019	(0.013)(36.6)/y
Trichlorophenol	0.014	(0.093)(36.6)/y
y = wastewater discharged in kgal per ton of product.		

SUBPART B

[Supplemental PSNS for bleached kraft facilities where paperboard, coarse paper, and tissue paper are produced]

Pollutant or pollutant property	Maximum for any 1 day	
	kg/kkg (or pounds per 1,000 lb) of product	Milligrams/liter
Pentachlorophenol	0.0016	(0.012)(31.7)/y
Trichlorophenol	0.012	(0.092)(31.7)/y
y = wastewater discharged in kgal per ton of product.		

SUBPART B

[Supplemental PSNS for bleached kraft facilities where pulp and fine papers are produced and soda facilities where pulp and paper are produced]

Pollutant or pollutant parameter	Maximum for any 1 day	
	kg/kkg (or pounds per 1,000 lb) of product	Milligrams/liter
Pentachlorophenol	0.0014	(0.014)(25.1)/y
Trichlorophenol	0.011	(0.101)(25.1)/y
y = wastewater discharged in kgal per ton of product.		

(c) An indirect discharger must demonstrate compliance with the pretreatment standards in paragraph (a)(1) of this section by monitoring at the point where the wastewater containing those pollutants leaves the bleach plant.

§ 430.28 Best management practices (BMPs).

The definitions and requirements set forth in 40 CFR 430.03 apply to facilities in this subpart.

Subpart C—Unbleached Kraft Subcategory

§ 430.30 Applicability; description of the unbleached kraft subcategory.

The provisions of this subpart are applicable to discharges resulting from: the production of pulp and paper at unbleached kraft mills; the production of pulp and paper at unbleached kraft-neutral sulfite semi-chemical (cross recovery) mills; and the production of pulp and paper at combined unbleached kraft and semi-chemical mills, wherein the spent semi-chemical cooking liquor is burned within the unbleached kraft chemical recovery system.

§ 430.31 Specialized definitions.

For the purpose of this subpart, the general definitions, abbreviations, and methods of analysis set forth in 40 CFR part 401 and § 430.01 of this part shall apply to this subpart.

§ 430.32 Effluent limitations representing the degree of effluent reduction attainable by the application of the best practicable control technology currently available (BPT).

Except as provided in 40 CFR 125.30 through 125.32, any existing point source subject to this subpart must achieve the following effluent limitations representing the degree of effluent reduction attainable by the application of the best practicable control technology currently available (BPT):

SUBPART C

[BPT effluent limitations for unbleached kraft facilities]

Pollutant or pollutant property	Kg/kkg (or pounds per 1,000 lb) of product	
	Maximum for any 1 day	Average of daily values for 30 consecutive days
BOD5	5.6	2.8
TSS	12.0	6.0
pH	(1)	(1)

[1] Within the range of 6.0 to 9.0 at all times.

SUBPART C

[BPT effluent limitations for unbleached kraft facilities producing pulp and paper using the unbleached kraft-neutral sulfite semi-chemical (cross recovery) process]

Pollutant or pollutant property	Kg/kkg (or pounds per 1,000 lb) of product	
	Maximum for any 1 day	Average of daily values for 30 consecutive days
BOD5	8.0	4.0
TSS	12.5	6.25
pH	(1)	(1)

1 Within the range of 6.0 to 9.0 at all times.

SUBPART C

[BPT effluent limitations for unbleached kraft facilities where pulp and paper are produced using a combined unbleached kraft and semi-chemical process, wherein the spent semi-chemical cooking liquor is burned within the unbleached kraft chemical recovery system]

Pollutant or pollutant property	Kg/kkg (or pounds per 1,000 lb) of product	
	Maximum for any 1 day	Average of daily values for 30 consecutive days
BOD5	(a)	(a)
TSS	(a)	(a)
pH	(a)	(a)

a [Reserved].

§ 430.33 Effluent limitations guidelines representing the degree of effluent reduction attainable by the application of the best conventional pollutant control technology (BCT).

Except as provided in 40 CFR 125.30 through 125.32, any existing point source subject to this subpart shall achieve the following effluent limitations representing the degree of effluent reduction attainable by the application of the best conventional pollutant control technology (BCT), except that non-continuous dischargers shall not be subject to the maximum day and average-of-30-consecutive-days limitations, but shall be subject to annual average effluent limitations:

SUBPART C

[BCT effluent limitations for unbleached kraft facilities]

Pollutant or pollutant property	Kg/kkg (or pounds per 1,000 lb) of product		
	Continuous dischargers	Non-continuous dischargers (annual average)	
		Maximum for any 1 day	Average of daily values for 30 consecutive days
BOD5	5.6	2.8	1.9
TSS	12.0	6.0	3.6
pH	(1)	(1)	(1)

1 Within the range of 6.0 to 9.0 at all times.

SUBPART C

[BCT effluent limitations for unbleached kraft-neutral sulfite semi-chemical (cross recovery) process and/or a combined unbleached kraft and semi-chemical process, wherein the spent semi-chemical cooking liquor is burned within the unbleached kraft chemical recovery system]

Pollutant or pollutant property	Kg/kkg (or pounds per 1,000 lb) of product		
	Continuous dischargers		Non-continuous dischargers (annual average)
	Maximum for any 1 day	Average of daily values for 30 consecutive days	
BOD5	8.0	4.0	2.9
TSS	12.5	6.25	3.57
pH	(1)	(1)	(1)

1 Within the range of 6.0 to 9.0 at all times.

§ 430.34 Effluent limitations representing the degree of effluent reduction attainable by the application of the best available technology economically achievable (BAT).

Except as provided in 40 CFR 125.30 through 125.32, any existing point source subject to this subpart where chlorophenolic-containing biocides are used must achieve the following effluent limitations representing the degree of effluent reduction attainable by the application of the best available technology economically achievable (BAT). Non-continuous dischargers shall not be subject to the maximum day mass limitations in kg/kkg (lb/1000 lb), but shall be subject to concentration limitations. Concentration limitations are only applicable to non-continuous dischargers. Permittees not using chlorophenolic-containing biocides must certify to the permit-issuing authority that they are not using these biocides:

SUBPART C

[BAT effluent limitations for unbleached kraft facilities]

Pollutant or pollutant property	Maximum for any 1 day	
	Kg/kkg (or pounds per 1,000 lb) of product	Milligrams/liter
Pentachlorophenol	0.00058	(0.011)(12.6)/y
Trichlorophenol	0.00053	(0.010)(12.6)/y
y=wastewater discharged in kgal per ton of product.		

SUBPART C

[BAT effluent limitations for unbleached kraft facilities where pulp and paper are produced using the unbleached kraft-neutral sulfite semi-chemical (cross recovery) process and/or a combined unbleached kraft and semi-chemical process, wherein the spent semi-chemical cooking liquor is burned within the unbleached kraft chemical recovery system]

Pollutant or pollutant property	Maximum for any 1 day	
	Kg/kkg (or pounds per 1,000 lb) of product	Milligrams/liter
Pentachlorophenol	0.00064	(0.011)(14.0)/y
Trichlorophenol	0.00059	(0.010)(14.0)/y
y=wastewater discharged in kgal per ton of product.		

§ 430.35 New source performance standards (NSPS).

Any new source subject to this subpart must achieve the following new source performance standards (NSPS), except that non-continuous dischargers shall not be subject to the maximum day and average of 30 consecutive days effluent limitations for BOD5 and TSS, but shall be subject to annual average effluent limitations. Also, for non-continuous dischargers, concentration limitations (mg/l) shall apply, where provided. Concentration limitations will only apply to non-continuous dischargers. Only facilities where chlorophenolic-containing biocides are used shall be subject to pentachlorophenol and trichlorophenol limitations. Permittees not using chlorophenolic-containing biocides must certify to the permit-issuing authority that they are not using these biocides:

SUBPART C

[NSPS for unbleached kraft facilities where linerboard is produced]

Pollutant or pollutant property	Kg/kkg (or pounds per 1,000 lb) of product		
	Continuous dischargers		Non-continuous dischargers (annual average)
	Maximum for any 1 day	Average of daily values for 30 consecutive days	
BOD5	3.4	1.8	0.94
TSS	5.8	3.0	1.6
pH	(1)	(1)	(1)

	Maximum for any 1 day	
	Kg/kkg (or pounds per 1,000 lb) of product	Milligrams/liter
Pentachlorophenol	0.00058	(0.015)(9.4)/y
Trichlorophenol	0.00053	(0.013)(9.4)/y
y = wastewater discharged in kgal per ton at all times.		

[1] Within the range of 5.0 to 9.0 at all times.

SUBPART C

[NSPS for unbleached kraft facilities where bag paper and other mixed products are produced]

Pollutant or pollutant property	Kg/kkg (or pounds per 1,000 lb) of product		
	Continuous dischargers		Non-continuous dischargers (annual average)
	Maximum for any 1 day	Average of daily values for 30 consecutive days	
BOD5	5.0	2.71	1.4
TSS	9.1	4.8	2.5
pH	(1)	(1)	(1)

	Maximum for any 1 day	
	Kg/kkg (or pounds per 1,000 lb) of product	Milligrams/liter
Pentachlorophenol	0.00058	(0.012)(11.4)/y
Trichlorophenol	0.00053	(0.011)(11.4)/y
y = wastewater discharged in kgal per ton at all times.		

[1] Within the range of 5.0 to 9.0 at all times.

SUBPART C

[NSPS for unbleached kraft facilities where pulp and paper are produced using the unbleached kraft-neutral sulfite semi-chemical (cross recovery) process and/or a combined unbleached kraft and semi-chemical process, wherein the spent semi-chemical cooking liquor is burned within the unbleached kraft chemical recovery system]

Pollutant or pollutant property	Kg/kkg (or pounds per 1,000 lb) of product		
	Continuous dischargers		Non-continuous dischargers (annual average)
	Maximum for any 1 day	Average of daily values for 30 consecutive days	
BOD5	3.9	2.1	1.1

SUBPART C—Continued

[NSPS for unbleached kraft facilities where pulp and paper are produced using the unbleached kraft-neutral sulfite semi-chemical (cross recovery) process and/or a combined unbleached kraft and semi-chemical process, wherein the spent semi-chemical cooking liquor is burned within the unbleached kraft chemical recovery system]

Pollutant or pollutant property	Kg/kkg (or pounds per 1,000 lb) of product		
	Continuous dischargers		Non-continuous dischargers (annual average)
	Maximum for any 1 day	Average of daily values for 30 consecutive days	
TSS	7.3	3.8	1.9
pH	(1)	(1)	(1)

	Maximum for any 1 day	
	Kg/kkg (or pounds per 1,000 lb) of product	Milligrams/liter
Pentachlorophenol	0.00064	(0.013)(11.5)/y
Trichlorophenol	0.00059	(0.012)(11.5)/y
y = wastewater discharged in kgal per ton at all times.		

[1] Within the range of 5.0 to 9.0 at all times.

§ 430.36 Pretreatment standards for existing sources (PSES).

Except as provided in 40 CFR 403.7 and 403.13, any existing source subject to this subpart that introduces pollutants into a publicly owned treatment works must: comply with 40 CFR part 403; and achieve the following pretreatment standards for existing sources (PSES) if it uses chlorophenolic-containing biocides. Permittees not using chlorophenolic-containing biocides must certify to the permit-issuing authority that they are not using those biocides. PSES must be attained on or before July 1, 1984:

SUBPART C

[PSES for unbleached kraft facilities]

Pollutant or pollutant property	Maximum for any 1 day	
	Milligrams/liter	Kg/kkg (or pounds per 1,000 lb) of product [a]
Pentachlorophenol	(0.011)(12.6)/y	0.00058
Trichlorophenol	(0.010)(12.6)/y	0.00053
y = wastewater discharged in kgal per ton of product.		

[a] The following equivalent mass limitations are provided as guidance in cases where POTWs find it necessary to impose mass effluent limitations.

SUBPART C

[PSES for unbleached kraft facilities where pulp and paper are produced using the unbleached kraft-neutral sulfite semi-chemical (cross recovery) process and/or a combined unbleached kraft and semi-chemical process, wherein the spent semi-chemical cooking liquor is burned within the unbleached kraft chemical recovery system]

Pollutant or pollutant property	Maximum for any 1 day	
	Milligrams/liter	Kg/kkg (or pounds per 1,000 lb) of product [a]
Pentachlorophenol	(0.011)(14.0)/y	0.00064
Trichlorophenol	(0.010)(14.0)/y	0.00059
y = wastewater discharged in kgal per ton of product.		

[a] The following equivalent mass limitations are provided as guidance in cases where POTWs find it necessary to impose mass effluent limitations.

§ 430.37 Pretreatment standards for new sources (PSNS).

(a) Except as provided in 40 CFR 403.7, any new source subject to this subpart that introduces pollutants into a publicly owned treatment works must: comply with 40 CFR part 403; and achieve the following pretreatment standards for new sources (PSNS) if it uses chlorophenolic-containing biocides. Permittees not using chlorophenolic-containing biocides must certify to the permit-issuing authority that they are not using these biocides:

SUBPART C

[PSNS for unbleached kraft facilities where linerboard is produced]

Pollutant or pollutant property	Maximum for any 1 day	
	Milligrams/liter	Kg/kkg (or pounds per 1,000 lb) of product [a]
Pentachlorophenol	(0.015)(9.4)/y	0.00058
Trichlorophenol	(0.013)(9.4)/y	0.00053
y = wastewater discharged in kgal per ton of product.		

[a] The following equivalent mass limitations are provided as guidance in cases where POTWs find it necessary to impose mass effluent limitations.

SUBPART C

[PSNS for unbleached kraft facilities where bag paper and other mixed products are produced]

Pollutant or pollutant property	Maximum for any 1 day	
	Milligrams/liter	Kg/kkg (or pounds per 1,000 lb) of product [a]
Pentachlorophenol	(0.012)(11.4)/y	0.00058
Trichlorophenol	(0.011)(11.4)/y	0.00053
y = wastewater discharged in kgal per ton of product.		

[a] The following equivalent mass limitations are provided as guidance in cases where POTWs find it necessary to impose mass effluent limitations.

SUBPART C

[PSNS for unbleached kraft facilities where pulp and paper are produced using the unbleached kraft-neutral sulfite semi-chemical (cross recovery) process and/or a combined unbleached kraft and semi-chemical process, wherein the spent semi-chemical cooking liquor is burned within the unbleached kraft chemical recovery system]

Pollutant or pollutant property	Maximum for any 1 day	
	Milligrams/liter	Kg/kkg (or pounds per 1,000 lb) of product [a]
Pentachlorophenol	(0.013)(11.5)/y	0.00064
Trichlorophenol	(0.012)(11.5)/y	0.00059
y = wastewater discharged in kgal per ton of product.		

[a] The following equivalent mass limitations are provided as guidance in cases where POTWs find it necessary to impose mass effluent limitations.

Subpart D—Dissolving Sulfite Subcategory

§ 430.40 Applicability; description of the dissolving sulfite subcategory.

The provisions of this subpart are applicable to discharges resulting from the production of pulp at dissolving sulfite mills.

§ 430.41 Specialized definitions.

For the purpose of this subpart, the general definitions, abbreviations, and methods of analysis set forth in 40 CFR part 401 and § 430.01 of this part shall apply to this subpart.

§ 430.42 Effluent limitations representing the degree of effluent reduction attainable by the application of the best practicable control technology currently available (BPT).

(a) Except as provided in 40 CFR 125.30 through 125.32, any existing point source subject to this subpart must achieve the following effluent limitations representing the degree of effluent reduction attainable by the application of the best practicable control technology currently available (BPT), except that non-continuous dischargers shall not be subject to the maximum day and average of 30 consecutive days limitations but shall be subject to annual average effluent limitations:

SUBPART D

[BPT effluent limitations for dissolving sulfite pulp facilities where nitration grade pulp is produced]

Pollutant or pollutant property	Kg/kkg (or pounds per 1,000 lb) of product		
	Continuous dischargers		Non-continuous dischargers (annual average)
	Maximum for any 1 day	Average of daily values for 30 consecutive days	
BOD5	41.4	21.5	12.1
TSS	70.65	38.05	20.9
pH	(1)	(1)	(1)

1 Within the range of 5.0 to 9.0 at all times.

SUBPART D

[BPT effluent limitations for dissolving sulfite pulp facilities where viscose grade pulp is produced]

Pollutant or pollutant property	Kg/kkg (or pounds per 1,000 lb) of product		
	Continuous dischargers		Non-continuous dischargers (annual average)
	Maximum for any 1 day	Average of daily values for 30 consecutive days	
BOD5	44.3	23.0	12.9
TSS	70.65	38.05	20.9
pH	(1)	(1)	(1)

1 Within the range of 5.0 to 9.0 at all times.

SUBPART D

[BPT effluent limitations for dissolving sulfite pulp facilities where cellophane grade pulp is produced]

Pollutant or pollutant property	Kg/kkg (or pounds per 1,000 lb) of product		
	Continuous dischargers		Non-continuous dischargers (annual average)
	Maximum for any 1 day	Average of daily values for 30 consecutive days	
BOD5	48.05	24.95	14.0
TSS	70.65	38.05	20.9
pH	(1)	(1)	(1)

1 Within the range of 5.0 to 9.0 at all times.

SUBPART D

[BPT effluent limitations for dissolving sulfite pulp facilities where acetate grade pulp is produced]

Pollutant or pollutant property	Kg/kkg (or pounds per 1,000 lb) of product		
	Continuous dischargers		Non-continuous dischargers (annual average)
	Maximum for any 1 day	Average of daily values for 30 consecutive days	
BOD5	[1]50.80	[1]26.40	[1]14.83
TSS	70.65	38.05	20.9
pH	(2)	(2)	(2)

1 BOD5 effluent limitations were remanded (Weyerhaeuser Company, et al v. Costle, 590 F. 2nd 1011; D.C. Circuit 1978).
2 Within the range of 5.0 to 9.0 at all times.

(b) The following limitations establish the quantity or quality of pollutants or pollutant properties, controlled by this section, resulting from the use of wet barking operations, which may be discharged by a point source subject to the provisions of this subpart. These limitations are in addition to the limitations set forth in paragraph (a) of this section and shall be calculated using the proportion of the mill's total production due to use of logs which are subject to such operations. Non-continuous dischargers shall not be subject to the maximum day and average of 30 consecutive days limitations, but shall be subject to annual average effluent limitations:

SUBPART D

[BPT effluent limitations]

Pollutant or pollutant property	Kg/kkg (or pounds per 1,000 lb) of product		
	Continuous dischargers		Non-continuous dischargers (annual average)
	Maximum for any 1 day	Average of daily values for 30 consecutive days	
BOD5	0.7	0.35	0.2
TSS	0.15	0.1	0.05
pH	(1)	(1)	(1)

1 Within the range of 5.0 to 9.0 at all times.

(c) The following limitations establish the quantity or quality of pollutants or pollutant parameters, controlled by this section, resulting from the use of log washing or chip washing operations, which may be discharged by a point source subject to the provisions of this subpart. These limitations are in addition to the limitations set forth in paragraph (a) of this section and shall be calculated using the proportion of the mill's total production due to use of logs and/or chips which are subject to such operations. Non-continuous dischargers shall not be subject to the maximum day and average of 30 consecutive days limitations, but shall be subject to the annual average effluent limitations:

SUBPART D

[BPT effluent limitations]

Pollutant or pollutant property	Kg/kkg (or pounds per 1,000 lb) of product		
	Continuous dischargers		Non-continuous dischargers (annual average)
	Maximum for any 1 day	Average of daily values for 30 consecutive days	
BOD5	0.15	0.1	0.05
TSS	0.15	0.1	0.05
pH	(1)	(1)	(1)

1 Within the range of 5.0 to 9.0 at all times.

(d) The following limitations establish the quantity or quality of pollutants or pollutant properties, controlled by this section, resulting from the use of log flumes or log ponds, which may be discharged by a point source subject to the provisions of this subpart. These limitations are in addition to the limitations set forth in paragraph (a) of this section and shall be calculated using the proportion of the mill's total production due to use of logs which are subject to such operations. Non-continuous dischargers shall not be subject to the maximum day and average of 30 consecutive days limitations but shall be subject to the annual average effluent limitations:

SUBPART D

[BPT effluent limitations]

Pollutant or pollutant property	Kg/kkg (or pounds per 1,000 lb) of product		
	Continuous dischargers		Non-continuous dischargers (annual average)
	Maximum for any 1 day	Average of daily values for 30 consecutive days	
BOD5	0.15	0.1	0.05
TSS	0.15	0.1	0.05
pH	(1)	(1)	(1)

[1] Within the range of 5.0 to 9.0 at all times.

§ 430.43 Effluent limitations guidelines representing the degree of effluent reduction attainable by the application of the best conventional pollutant control technology (BCT).

Except as provided in 40 CFR 125.30 through 125.32, any existing point source subject to this subpart shall achieve the following effluent limitations representing the degree of effluent reduction attainable by the application of the best conventional pollutant control technology (BCT): The limitations shall be the same as those specified for conventional pollutants (which are defined in 40 CFR 401.16) in § 430.42 of this subpart for the best practicable control technology currently available (BPT).

§ 430.44 Effluent limitations representing the degree of effluent reduction attainable by the application of the best available technology economically achievable (BAT).

Except as provided in 40 CFR 125.30 through 125.32, any existing point source subject to this subpart where chlorophenolic-containing biocides are used must achieve the following effluent limitations representing the degree of effluent reduction attainable by the application of the best available technology economically achievable (BAT). Non-continuous dischargers shall not be subject to the maximum day mass limitations in kg/kkg (lb/1000 lb) but shall be subject to concentration limitations. Concentration limitations are only applicable to non-continuous dischargers. Permittees not using chlorophenolic-containing biocides must certify to the permit-issuing authority that they are not using these biocides:

SUBPART D

[BAT effluent limitations for dissolving sulfite pulp facilities where nitration, viscose, or cellophane pulps are produced]

Pollutant or pollutant property	Maximum for any 1 day	
	Kg/kkg (or pounds per 1,000 lb) of product	Milligrams/liter
Pentachlorophenol	0.0030	(0.011)(66.0)/y
Trichlorophenol	0.019	(0.068)(66.0)/y
y = wastewater discharged in kgal per ton of product.		

SUBPART D

[BAT effluent limitations for dissolving sulfite pulp facilities where acetate grade pulp is produced]

Pollutant or pollutant property	Maximum for any 1 day	
	Kg/kkg (or pounds per 1,000 lb) of product	Milligrams/liter
Pentachlorophenol	0.0033	(0.011)(72.7)/y
Trichlorophenol	0.021	(0.068)(72.7)/y
y = wastewater discharged in kgal per ton of product.		

§ 430.45 New source performance standards (NSPS).

Any new source subject to this subpart must achieve the following new source performance standards (NSPS), except that non-continuous dischargers shall not be subject to the maximum day and average of 30 consecutive days effluent limitations for BOD5 and TSS, but shall be subject to annual average effluent limitations. Also, for non-continuous dischargers, concentration limitations (mg/l) shall apply, where provided. Concentration limitations will only apply to non-continuous dischargers. Only facilities where chlorophenolic-containing biocides are used shall be subject to pentachlorophenol and trichlorophenol limitations. Permittees not using chlorophenolic-containing biocides

must certify to the permit-issuing authority that they are not using these biocides:

SUBPART D

[NSPS for dissolving sulfite pulp facilities where nitration grade pulp is produced]

Pollutant or pollutant property	Kg/kkg (or pounds per 1,000 lb) of product		
	Continuous dischargers		Non-continuous dischargers (annual average)
	Maximum for any 1 day	Average of daily values for 30 consecutive days	
BOD5	26.9	14.5	7.59
TSS	40.8	21.3	11.2
pH	(1)	(1)	(1)

	Maximum for any 1 day	
	Kg/kkg (or pounds per 1,000 lb) of product	Milligrams/liter
Pentachlorophenol	0.0030	(0.012)(59.0)/y
Trichlorophenol	0.019	(0.012)(59.0)/y
y = wastewater discharged in kgal per ton at all times.		

[1] Within the range of 5.0 to 9.0 at all times.

SUBPART D

[NSPS for dissolving sulfite pulp facilities where viscose grade pulp is produced]

Pollutant or pollutant property	Kg/kkg (or pounds per 1,000 lb) of product		
	Continuous dischargers		Non-continuous dischargers (annual average)
	Maximum for any 1 day	Average of daily values for 30 consecutive days	
BOD5	28.7	15.5	8.12
TSS	40.8	21.3	11.2
pH	(1)	(1)	(1)

	Maximum for any 1 day	
	Kg/kkg (or pounds per 1,000 lb) of product	Milligrams/liter
Pentachlorophenol	0.0030	(0.012)(59.0)/y
Trichlorophenol	0.019	(0.012)(59.0)/y
y = wastewater discharged in kgal per ton at all times.		

[1] Within the range of 5.0 to 9.0 at all times.

SUBPART D

[NSPS for dissolving sulfite pulp facilities where cellophane grade pulp is produced]

Pollutant or pollutant property	Kg/kkg (or pounds per 1,000 lb) of product		
	Continuous dischargers		Non-continuous dischargers (annual average)
	Maximum for any 1 day	Average of daily values for 30 consecutive days	
BOD5	31.2	16.8	8.80
TSS	40.8	21.3	11.2
pH	(1)	(1)	(1)

	Maximum for any 1 day	
	Kg/kkg (or pounds per 1,000 lb) of product	Milligrams/liter
Pentachlorophenol	0.0030	(0.012)(59.0)/y
Trichlorophenol	0.019	(0.076)(59.0)/y
y = wastewater discharged in kgal per ton at all times.		

[1] Within the range of 5.0 to 9.0 at all times.

SUBPART D

[NSPS for dissolving sulfite pulp facilities where acetate grade pulp is produced]

Pollutant or pollutant property	Kg/kkg (or pounds per 1,000 lb) of product		
	Continuous dischargers		Non-continuous dischargers (annual average)
	Maximum for any 1 day	Average of daily values for 30 consecutive days	
BOD5	39.6	21.4	11.2
TSS	41.1	21.5	11.3
pH	(1)	(1)	(1)

	Maximum for any 1 day	
	Kg/kkg (or pounds per 1,000 lb) of product	Milligrams/liter
Pentachlorophenol	0.0033	(0.012)(65.7)/y
Trichlorophenol	0.021	(0.075)(65.7)/y
y = wastewater discharged in kgal per ton at all times.		

[1] Within the range of 5.0 to 9.0 at all times.

§ 430.46 Pretreatment standards for existing sources (PSES).

Except as provided in 40 CFR 403.7 and 403.13, any existing source subject to this subpart that introduces pollutants into a publicly owned treatment works must: comply with 40 CFR part 403; and achieve the following pretreatment standards for existing sources (PSES) if it uses chlorophenolic-containing biocides. Permittees not using chlorophenolic-containing biocides must certify to the permit-issuing authority that they are not using these biocides. PSES must be attained on or before July 1, 1984:

SUBPART D

[PSES for dissolving sulfite pulp facilities where nitration, viscose, or cellophane grade pulps are produced]

Pollutant or pollutant property	Maximum for any 1 day	
	Milligrams/liter (mg/l)	Kg/kkg (or pounds per 1,000 lb) of product [a]
Pentachlorophenol	(0.011)(66.0)/y	0.0030
Trichlorophenol	(0.082)(66.0)/y	0.023
y = wastewater discharged in kgal per ton of product.		

[a] The following equivalent mass limitations are provided as guidance in cases when POTWs find it necessary to impose mass effluent limitations.

SUBPART D

[PSES for dissolving sulfite pulp facilities where acetate grade pulp is produced]

Pollutant or pollutant property	Maximum for any 1 day	
	Milligrams/liter (mg/l)	Kg/kkg (or pounds per 1,000 lb) of product [a]
Pentachlorophenol	(0.011)(72.7)/y	0.0033
Trichlorophenol	(0.082)(72.7)/y	0.025
y = wastewater discharged in kgal per ton of product.		

[a] The following equivalent mass limitations are provided as guidance in cases when POTWs find it necessary to impose mass effluent limitations.

§ 430.47 Pretreatment standards for new sources (PSNS).

Except as provided in 40 CFR 403.7, any new source subject to this subpart that introduces pollutants into a publicly owned treatment works must: comply with 40 CFR part 403; and achieve the following pretreatment standards for new sources (PSNS) if it uses chlorophenolic-containing biocides. Permittees not using chlorophenolic-containing biocides must certify to the permit-issuing authority that they are not using these biocides:

SUBPART D

[PSNS for dissolving sulfite pulp facilities where nitration, viscose, or cellophane grade pulps are produced]

Pollutant or pollutant property	Maximum for any 1 day	
	Milligrams/liter (mg/l)	Kg/kkg (or pounds per 1,000 lb) of product [a]
Pentachlorophenol	(0.012)(59.0)/y	0.0030
Trichlorophenol	(0.092)(59.0)/y	0.023
y = wastewater discharged in kgal per ton of product.		

[a] The following equivalent mass limitations are provided as guidance in cases when POTWs find it necessary to impose mass effluent limitations.

SUBPART D

[PSNS for dissolving sulfite pulp facilities where acetate grade pulp is produced]

Pollutant or pollutant property	Maximum for any 1 day	
	Milligrams/liter (mg/l)	Kg/kkg (or pounds per 1,000 lb) of product [a]
Pentachlorophenol	(0.012)(65.7)/y	0.0033
Trichlorophenol	(0.091)(65.7)/y	0.025
y=wastewater discharged in kgal per ton of product.		

[a] The following equivalent mass limitations are provided as guidance in cases when POTWs find it necessary to impose mass effluent limitations.

Subpart E—Papergrade Sulfite Subcategory

§ 430.50 Applicability; description of the papergrade sulfite subcategory.

The provisions of this subpart apply to discharges resulting from the: integrated production of pulp and paper at papergrade sulfite mills, where blow pit pulp washing techniques are used; and the integrated production of pulp and paper at papergrade sulfite mills where vacuum or pressure drums are used to wash pulp.

§ 430.51 Specialized definitions.

(a) Except as provided in paragraphs (b) and (c) of this section, the general definitions, abbreviations, and methods of analysis set forth in 40 CFR part 401 and § 430.01 of this part apply to this subpart.

(b) *Sulfite cooking liquor* is defined as bisulfite cooking liquor when the pH of the liquor is between 3.0 and 6.0 and as acid sulfite cooking liquor when the pH is less than 3.0.

(c) For this subpart, the segments for the papergrade sulfite subcategory are defined as follows:

(1) The calcium-, magnesium-, or sodium-based sulfite pulp segment consists of papergrade sulfite mills where pulp and paper are produced using an acidic cooking liquor of calcium, magnesium, or sodium sulfite, unless those mills are specialty grade sulfite mills;

(2) The ammonium-based sulfite pulp segment consists of papergrade sulfite mills where pulp and paper are produced using an acidic cooking liquor of ammonium sulfite, unless those mills are specialty grade sulfite mills;

(3) The specialty grade sulfite pulp segment consists of those papergrade sulfite mills where a significant portion of production is characterized by pulp with a high percentage of alpha cellulose and high brightness sufficent to produce end products such as plastic molding compounds, saturating and laminating products, and photographic papers. The specialty grade segment also includes those mills where a major portion of production is 91 ISO brightness and above.

§ 430.52 Effluent limitations representing the degree of effluent reduction attainable by the application of the best practicable control technology currently available (BPT).

(a) Except as provided in 40 CFR 125.30 through 125.32, any existing point source subject to this subpart must achieve the following effluent limitations representing the degree of effluent reduction attainable by the application of the best practicable control technology currently available (BPT):

SUBPART E

[Bisulfite liquor/surface condensers; BPT effluent limitations for papergrade sulfite facilities where blow pit washing techniques are used]

Pollutant or pollutant property	Kg/kkg (or pounds per 1,000 lb) of product		
	Continuous dischargers		Non-continuous dischargers (annual average)
	Maximum for any 1 day	Average of daily values for 30 consecutive days	
BOD5	31.8	16.55	9.30
TSS	43.95	23.65	12.99
pH	(1)	(1)	(1)

1 Within the range of 5.0 to 9.0 at all times.

SUBPART E

[Bisulfite liquor/barometric condensers; BPT effluent limitations for papergrade sulfite facilities where blow pit washing techniques are used]

Pollutant or pollutant property	Kg/kkg (or pounds per 1,000 lb) of product		
	Continuous dischargers		Non-continuous dischargers (annual average)
	Maximum for any 1 day	Average of daily values for 30 consecutive days	
BOD5	34.7	18.05	10.14
TSS	52.2	28.1	15.44
pH	(1)	(1)	(1)

1 Within the range of 5.0 to 9.0 at all times.

SUBPART E

[Acid sulfite liquor/surface condensers; BPT effluent limitations for papergrade sulfite facilities where blow pit washing techniques are used]

Pollutant or pollutant property	Kg/kkg (or pounds per 1,000 lb) of product		
	Continuous dischargers		Non-continuous dischargers (annual average)
	Maximum for any 1 day	Average of daily values for 30 consecutive days	
BOD5	32.3	16.8	9.44
TSS	43.95	23.65	12.99
pH	(1)	(1)	(1)

1 Within the range of 5.0 to 9.0 at all times.

SUBPART E

[Acid sulfite liquor/barometric condensers; BPT effluent limitations for papergrade sulfite facilities where blow pit washing techniques are used]

Pollutant or pollutant property	Kg/kkg (or pounds per 1,000 lb) of product		
	Continuous dischargers		Non-continuous dischargers (annual average)
	Maximum for any 1 day	Average of daily values for 30 consecutive days	
BOD5	35.55	18.5	10.39
TSS	52.2	28.1	15.44
pH	(1)	(1)	(1)

1 Within the range of 5.0 to 9.0 at all times.

SUBPART E

[Bisulfite liquor/surface condensers; BPT effluent limitations for papergrade sulfite facilities where vacuum or pressure drums are used to wash pulp]

Pollutant or pollutant property	Kg/kkg (or pounds per 1,000 lb) of product		
	Continuous dischargers		Non-continuous dischargers (annual average)
	Maximum for any 1 day	Average of daily values for 30 consecutive days	
BOD5	26.7	13.9	7.81
TSS	43.95	23.65	12.99
pH	(1)	(1)	(1)

1 Within the range of 5.0 to 9.0 at all times.
NOTE: Limitations above do not apply to mills using continuous digesters.

SUBPART E

[Bisulfite liquor/barometric condensers; BPT effluent limitations for papergrade sulfite facilities where vacuum or pressure drums are used to wash pulp]

Pollutant or pollutant property	Kg/kkg (or pounds per 1,000 lb) of product		
	Continuous dischargers		Non-continuous dischargers (annual average)
	Maximum for any 1 day	Average of daily values for 30 consecutive days	
BOD5	29.4	15.3	8.60
TSS	52.2	28.1	15.44

SUBPART E—Continued

[Bisulfite liquor/barometric condensers; BPT effluent limitations for papergrade sulfite facilities where vacuum or pressure drums are used to wash pulp]

Pollutant or pollutant property	Kg/kkg (or pounds per 1,000 lb) of product		
	Continuous dischargers		Non-continuous dischargers (annual average)
	Maximum for any 1 day	Average of daily values for 30 consecutive days	
pH	(1)	(1)	(1)

1 Within the range of 5.0 to 9.0 at all times.
NOTE: Limitations above do not apply to mills using continuous digesters.

SUBPART E

[Acid sulfite liquor/surface condensers; BPT effluent limitations for papergrade sulfite facilities where vacuum or pressure drums are used to wash pulp]

Pollutant or pollutant property	Kg/kkg (or pounds per 1,000 lb) of product		
	Continuous dischargers		Non-continuous dischargers (annual average)
	Maximum for any 1 day	Average of daily values for 30 consecutive days	
BOD5	29.75	15.5	8.71
TSS	43.95	23.65	12.99
pH	(1)	(1)	(1)

1 Within the range of 5.0 to 9.0 at all times.
NOTE: Limitations above do not apply to mills using continuous digesters.

SUBPART E

[Acid sulfite liquor/barometric condensers; BPT effluent limitations for papergrade sulfite facilities where vacuum or pressure drums are used to wash pulp]

Pollutant or pollutant property	Kg/kkg (or pounds per 1,000 lb) of product		
	Continuous dischargers		Non-continuous dischargers (annual average)
	Maximum for any 1 day	Average of daily values for 30 consecutive days	
BOD5	32.5	16.9	9.49
TSS	52.2	28.1	15.44
pH	(1)	(1)	(1)

1 Within the range of 5.0 to 9.0 at all times.
NOTE: Limitations above do not apply to mills using continuous digesters.

SUBPART E

[Continuous digesters; BPT effluent limitations for papergrade sulfite facilities where vacuum or pressure drums are used to wash pulp]

Pollutant or pollutant property	Kg/kkg (or pounds per 1,000 lb) of product		
	Continuous dischargers		Non-continuous dischargers (annual average)
	Maximum for any 1 day	Average of daily values for 30 consecutive days	
BOD5	38.15	19.85	11.15
TSS	53.75	28.95	15.91

SUBPART E—Continued

[Continuous digesters; BPT effluent limitations for papergrade sulfite facilities where vacuum or pressure drums are used to wash pulp]

Pollutant or pollutant property	Kg/kkg (or pounds per 1,000 lb) of product		
	Continuous dischargers		Non-continuous dischargers (annual average)
	Maximum for any 1 day	Average of daily values for 30 consecutive days	
pH	(1)	(1)	(1)

1 Within the range of 5.0 to 9.0 at all times.

(b) The following limitations establish the quantity or quality of pollutants or pollutant properties, controlled by this section, resulting from the use of wet barking operations, which may be discharged by a point source subject to the provisions of this subpart. These limitations are in addition to the limitations set forth in paragraph (a) of this section and shall be calculated using the proportion of the mill's total production due to use of logs which are subject to such operations:

SUBPART E

[BPT effluent limitations for papergrade sulfite facilities where blow pit washing techniques are used]

Pollutant or pollutant property	Kg/kkg (or pounds per 1,000 lb) of product		
	Continuous dischargers		Non-continuous dischargers (annual average)
	Maximum for any 1 day	Average of daily values for 30 consecutive days	
BOD5	2.7	1.45	0.80
TSS	7.5	3.95	2.19
pH	(1)	(1)	(1)

1 Within the range of 5.0 to 9.0 at all times.

SUBPART E

[BPT effluent limitations for papergrade sulfite facilities where vacuum or pressure drums are used to wash pulp]

Pollutant or pollutant property	Kg/kkg (or pounds per 1,000 lb) of product		
	Continuous dischargers		Non-continuous dischargers (annual average)
	Maximum for any 1 day	Average of daily values for 30 consecutive days	
BOD5	3.05	1.6	0.90
TSS	7.5	3.95	2.19
pH	(1)	(1)	(1)

1 Within the range of 5.0 to 9.0 at all times.

(c) The following limitations establish the quantity or quality of pollutants or pollutant parameters, controlled by this section, resulting from the use of log washing or chip washing operations, which may be discharged by a point source subject to the provisions of this subpart. These limitations are in addition to the limitations set forth in paragraph (a) of this section and shall be calculated using the proportion of the mill's total production due to use of logs and/or chips which are subject to such operations:

SUBPART E

[BPT effluent limitations for papergrade sulfite facilities where blow pit washing techniques are used]

Pollutant or pollutant property	Kg/kkg (or pounds per 1,000 lb) of product		
	Continuous dischargers		Non-continuous dischargers (annual average)
	Maximum for any 1 day	Average of daily values for 30 consecutive days	
BOD5	0.15	0.1	0.05
TSS	2.55	1.35	0.75
pH	(1)	(1)	(1)

1 Within the range of 5.0 to 9.0 at all times.

SUBPART E

[BPT effluent limitations for papergrade sulfite facilities where vacuum or pressure drums are used to wash pulp]

Pollutant or pollutant property	Kg/kkg (or pounds per 1,000 lb) of product		
	Continuous dischargers		Non-continuous dischargers (annual average)
	Maximum for any 1 day	Average of daily values for 30 consecutive days	
BOD5	0.35	0.2	0.1
TSS	2.55	1.35	0.75
pH	(1)	(1)	(1)

1 Within the range of 5.0 to 9.0 at all times.

(d) The following limitations establish the quantity or quality of pollutants or pollutant properties, controlled by this section, resulting from the use of log flumes or log ponds, which may be discharged by a point source subject to the provisions of this subpart. These limitations are in addition to the limitations set forth in paragraph (a) of this section and shall be calculated using the proportion of the mill's total production due to use of logs which are subject to such operations:

SUBPART E

[BPT effluent limitations for papergrade sulfite facilities where blow pit washing techniques are used]

Pollutant or pollutant property	Kg/kkg (or pounds per 1,000 lb) of product		
	Continuous dischargers		Non-continuous dischargers (annual average)
	Maximum for any 1 day	Average of daily values for 30 consecutive days	
BOD5	0.35	0.2	0.1
TSS	1.7	0.9	0.5
pH	(1)	(1)	(1)

1 Within the range of 5.0 to 9.0 at all times.

SUBPART E

[BPT effluent limitations for papergrade sulfite facilities where vacuum or pressure drums are used to wash pulp]

Pollutant or pollutant property	Kg/kkg (or pounds per 1,000 lb) of product		
	Continuous dischargers		Non-continuous dischargers (annual average)
	Maximum for any 1 day	Average of daily values for 30 consecutive days	
BOD5	0.7	0.35	0.2
TSS	1.70	0.9	0.5
pH	(1)	(1)	(1)

1 Within the range of 5.0 to 9.0 at all times.

§ 430.53 Effluent limitations representing the degree of effluent reduction attainable by the application of the best conventional pollutant control technology (BCT).

Except as provided in 40 CFR 125.30 through 125.32, any existing point source subject to this subpart must achieve the following effluent limitations representing the degree of effluent reduction attainable by the application of the best conventional pollutant control technology (BCT). The limitations shall be the same as those specified for conventional pollutants in § 430.52 of this subpart for the best practicable control technology currently available (BCT).

§ 430.54 Effluent limitations representing the degree of effluent reduction attainable by the application of best available technology economically achievable (BAT).

Except as provided in 40 CFR 125.30 through 125.32, any existing point source subject to this subpart must achieve the following effluent limitations representing the degree of effluent reduction attainable by the application of the best available technology economically achievable (BAT).

(a) (1) The following effluent limitations apply to all dischargers in the calcium-, magnesium-, or sodium-based sulfite pulp segment:

SUBPART E

[Production of Calcium-, Magnesium-, or Sodium-based Sulfite Pulps]

Pollutant or pollutant property	BAT effluent limitations			
	Continuous dischargers		Non-continuous dischargers	
	Maximum for any 1 day	Monthly average	Maximum for any 1 day	Annual average
	kg/kkg (or pounds per 1,000 lb) of product			
AOX	<ML[a]	([b])	<ML[a]	([b])
COD	([c])	([c])	([c])	([c])

[a] "<ML" means less than the minimum level specified in § 430.01(i) for the particular pollutant.
[b] This regulation does not specify this type of limitation for this pollutant; however, permitting authorities may do so as appropriate.
[c] [Reserved].

(2)(i) The following effluent limitations apply to all dischargers in the ammonium-based sulfite pulp segment:

SUBPART E—PRODUCTION OF AMMONIUM-BASED SULFITE PULPS

Pollutant or pollutant property	BAT effluent limitations	
	Maximum for any 1 day	Monthly average
TCDD[a]	<ML[b]	([c])
TCDF[a]	<ML[b]	([c])
Chloroform[a]	([d])	([c])
Trichlorosyringol[a]	<ML[b]	([c])
3,4,5-trichlorocatechol[a]	<ML[b]	([c])
3,4,6-trichlorocatechol[a]	<ML[b]	([c])
3,4,5-trichloroguaiacol[a]	<ML[b]	([c])
3,4,6-trichloroguaiacol[a]	<ML[b]	([c])
4,5,6-trichloroguaiacol[a]	<ML[b]	([c])
2,4,5-trichlorophenol[a]	<ML[b]	([c])
2,4,6-trichlorophenol[a]	<ML[b]	([c])
Tetrachlorocatechol[a]	<ML[b]	([c])
Tetrachloroguaiacol[a]	<ML[b]	([c])
2,3,4,6-tetrachlorophenol[a]	<ML[b]	([c])
Pentachlorophenol[a]	<ML[b]	([c])

	Continuous dischargers		Non-continuous dischargers	
	Maximum for any 1 day	Monthly average	Maximum for any 1 day	Annual average
	kg/kkg (or pounds per 1,000 lb) of product			
AOX	(d)	(d)	(d)	(d)
COD	(d)	(d)	(d)	(d)

[a] These limitations do not apply with respect to fiber lines that use a TCF bleaching process as disclosed by the discharger in its permit application under 40 CFR 122.21(g)(3) and certified under 40 CFR 122.22.
[b] "<ML" means less than the minimum level specified in § 430.01(i) for the particular pollutant.
[c] This regulation does not specify this type of limitation for this pollutant; however, permitting authorities may do so as appropriate.
[d] [Reserved].

(ii) The following effluent limitations apply to all dischargers in the ammonium-based sulfite pulp segment with respect to each fiber line that uses exclusively TCF bleaching processes, as disclosed by the discharger in its NPDES permit application under 40 CFR 122.21(g)(3) and certified under 40 CFR 122.22:

SUBPART E—PRODUCTION OF AMMONIUM-BASED SULFITE PULPS

Pollutant or pollutant property	BAT effluent limitations (TCF)			
	Continuous dischargers		Non-continuous dischargers	
	Maximum for any 1 day	Monthly average	Maximum for any 1 day	Annual average
	kg/kkg (or pounds per 1000 lb) of product			
AOX	<ML [a]	(b)	<ML [a]	(b)
COD	(c)	(c)	(c)	(c)

[a] "<ML" means less than the minimum level specified in § 430.01(i) for the particular pollutant.
[b] This regulation does not specify this type of limitation for this pollutant; however, permitting authorities may do so as appropriate.
[c] [Reserved].

(3)(i) The following effluent limitations apply to all dischargers in the specialty grade pulp segment:

SUBPART E—PRODUCTION OF SPECIALTY GRADE SULFITE PULPS

Pollutant or pollutant property	BAT effluent limitations	
	Maximum for any 1 day	Monthly Average
TCDD [a]	<ML [b]	(c)
TCDF [a]	<ML [b]	(c)
Chloroform [a]	(d)	(c)
Trichlorosyringol [a]	<ML [b]	(c)
3,4,5-trichlorocatechol [a]	<ML [b]	(c)
3,4,6-trichlorocatechol [a]	<ML [b]	(c)
3,4,5-trichloroguaiacol [a]	<ML [b]	(c)
3,4,6-trichloroguaiacol [a]	<ML [b]	(c)
4,5,6-trichloroguaiacol [a]	<ML [b]	(c)
2,4,5-trichlorophenol [a]	<ML [b]	(c)
2,4,6-trichlorophenol [a]	<ML [b]	(c)
Tetrachlorocatechol [a]	<ML [b]	(c)
Tetrachloroguaiacol [a]	<ML [b]	(c)
2,3,4,6-tetrachlorophenol [a]	<ML [b]	(c)
Pentachlorophenol [a]	<ML [b]	(c)

	Continuous dischargers		Non-continuous dischargers	
	Maximum for any 1 day	Monthly average	Maximum for any 1 day	Annual average
	kg/kkg (or pounds per 1,000 lb) of product			
AOX	(d)	(d)	(d)	(d)
COD	(d)	(d)	(d)	(d)

[a] These limitations do not apply with respect to fiber lines that use a TCF bleaching process as disclosed by the discharger in its permit application under 40 CFR 122.21(g)(3) and certified under 40 CFR 122.22.
[b] "<ML" means less than the minimum level specified in § 430.01(i) for the particular pollutant.
[c] This regulation does not specify this type of limitation for this pollutant; however, permitting authorities may do so as appropriate.

[d] [Reserved].

(ii) The following effluent limitations apply to dischargers in the specialty grade pulp segment with respect to each fiber line that uses exclusively TCF bleaching processes, as disclosed by the discharger in its NPDES permit application under 40 CFR 122.21(g)(3) and certified under 40 CFR 122.22:

SUBPART E—PRODUCTION OF SPECIALTY GRADE PULPS

Pollutant or pollutant property	BAT effluent limitations (TCF)			
	Continuous dischargers		Non-continuous dischargers	
	Maximum for any 1 day	Monthly average	Maximum for any 1 day	Annual average
	kg/kkg (or pounds per 1000 lb) of product			
AOX	<ML [a]	([b])	<ML [a]	([b])
COD	([c])	([c])	([c])	([c])

[a] "<ML" means less than the minimum level specified in § 430.01(i) for the particular pollutant.
[b] This regulation does not specify this type of limitation for this pollutant; however, permitting authorities may do so as appropriate.
[c] [Reserved].

(b) The following additional effluent limitations apply to each discharger subject to this section in accordance with the previous subcatgorization scheme unless it certifies to the permitting authority that it is not using these compounds as biocides. Also, for non-continuous dischargers, concentration limitations (mg/l) shall apply. Concentration limitations will only apply to non-continuous dischargers:

SUBPART E

[Supplemental BAT effluent limitations]

Pollutant or pollutant property	Maximum for any 1 day	
	kg/kkg (or pounds per 1,000 lb) of product	Milligrams/liter
Pentachlorophenol	0.00058exp(0.017x)	((0.011)(12.67)exp(0.017x))/y
Trichlorophenol	0.0036exp(0.017x)	((0.068)(12.67)exp(0.017x))/y
x = percent sulfite pulp in final product.		
y = wastewater discharged in kgal per ton of product.		

(c) Pursuant to 40 CFR 122.44(i) and 122.45(h), a discharger must demonstrate compliance with the limitations in paragraphs (a)(2) or (a)(3) of this section, as applicable, by monitoring for all pollutants (except for AOX and COD) at the point where the wastewater containing those pollutants leaves the bleach plant. The permitting authority may impose effluent limitations and/or monitoring requirements on internal wastestreams for any other pollutants covered in this section as appropriate under 40 CFR 122.44(i) and 122.45(h).

§ 430.55 New source performance standards (NSPS).

New sources subject to this subpart must achieve the following new source performance standards (NSPS), as applicable.

(a) The following standards apply to each new source regardless of when it commenced discharge:

SUBPART E

[1982 NSPS]

Pollutant or pollutant property	Kg/kkg (or pounds per 1,000 lb) of product		
	Continuous dischargers		Non-continuous dischargers (annual average)
	Maximum for any 1 day	Average of daily values for 30 consecutive days	
BOD5	4.38exp(0.017x)	2.36exp(0.017x)	Average of daily values for 30 consecutive days divided by 1.91.
TSS	5.81exp(0.017x)	3.03exp(0.017x)	Average of daily values for 30 consecutive days divided by 1.90.
pH	([1])	([1])	([1])
x = percent sulfite pulp in final product.			

[1] Within the range of 5.0 to 9.0 at all times.

(b) The following standards apply with respect to each new source fiber line that commences discharge after June 15, 1998.

(1) The following standards apply to all new sources in the calcium-, magnesium-, or sodium-based sulfite pulp segment:

SUBPART E

[Production of Calcium-, Magnesium-, or Sodium-based Sulfite Pulps]

Pollutant or pollutant property	NSPS			
	Continuous dischargers		Non-continuous dischargers	
	Maximum for any 1 day	Monthly average	Maximum for any 1 day	Annual average
	kg/kkg (or pounds per 1,000 lb) of product			
AOX	<ML [a]	([b])	<ML [a]	([b])
COD	([c])	([c])	([c])	([c])

[a] "<ML" means less than the minimum level specified in § 430.01(i) for the particular pollutant.
[b] This regulation does not specify this type of limitation for this pollutant; however, permitting authorities may do so as appropriate.
[c] [Reserved].

(2)(i) The following standards apply to all new sources in the ammonium-based sulfite pulp segment:

SUBPART E—PRODUCTION OF AMMONIUM-BASED SULFITE PULPS

Pollutant or pollutant property	NSPS	
	Maximum for any 1 day	Monthly average
TCDD [a]	<ML [b]	([c])
TCDF [a]	<ML [b]	([c])
Chloroform [a]	([d])	([d])
Trichlorosyringol [a]	<ML [b]	([c])
3,4,5-trichlorocatechol [a]	<ML [b]	([c])
3,4,6-trichlorocatechol [a]	<ML [b]	([c])
3,4,5-trichloroguaiacol [a]	<ML [b]	([c])
3,4,6-trichloroguaiacol [a]	<ML [b]	([c])
4,5,6-trichloroguaiacol [a]	<ML [b]	([c])
2,4,5-trichlorophenol [a]	<ML [b]	([c])
2,4,6-trichlorophenol [a]	<ML [b]	([c])
Tetrachlorocatechol [a]	<ML [b]	([c])
Tetrachloroguaiacol [a]	<ML [b]	([c])
2,3,4,6-tetrachlorophenol [a]	<ML [b]	([c])
Pentachlorophenol [a]	<ML [b]	([c])

	Continuous dischargers		Non-continuous dischargers	
	Maximum for any 1 day	Monthly average	Maximum for any 1 day	Annual average
	kg/kkg (or pounds per 1,000 lb) of product			
AOX	([d])	([d])	([d])	([d])
COD	([d])	([d])	([d])	([d])

[a] These limitations do not apply with respect to fiber lines that use a TCF bleaching process as disclosed by the discharger in its permit application under 40 CFR 122.21(g)(3) and certified under 40 CFR 122.22.
[b] "<ML" means less than the minimum level specified in § 430.01(i) for the particular pollutant.
[c] This regulation does not specify this type of limitation for this pollutant; however, permitting authorities may do so as appropriate.
[d] [Reserved].

(ii) The following standards apply to all new sources in the ammonium-based sulfite pulp segment with respect to each fiber line that uses exclusively TCF bleaching processes, as disclosed by the discharger in its NPDES permit application under 40 CFR 122.21(g)(3) and certified under 40 CFR 122.22:

SUBPART E—PRODUCTION OF AMMONIUM-BASED SULFITE PULPS

Pollutant or pollutant property	NSPS (TCF)			
	Continuous dischargers		Non-continuous dischargers	
	Maximum for any 1 day	Monthly average	Maximum for any 1 day	Annual average
	kg/kkg (or pounds per 1000 lb) of product			
AOX	<ML [a]	([b])	<ML [a]	([b])

SUBPART E—PRODUCTION OF AMMONIUM-BASED SULFITE PULPS—Continued

Pollutant or pollutant property	NSPS (TCF)			
	Continuous dischargers		Non-continuous dischargers	
	Maximum for any 1 day	Monthly average	Maximum for any 1 day	Annual average
COD	(c)	(c)	(c)	(c)

[a] "<ML" means less than the minimum level specified in § 430.01(i) for the particular pollutant.
[b] This regulation does not specify this type of limitation for this pollutant; however, permitting authorities may do so as appropriate.
[c] [Reserved].

(3)(i) The following standards apply to all new sources in the specialty grade sulfite pulp segment:

SUBPART E—PRODUCTION OF SPECIALTY GRADE SULFITE PULPS

Pollutant or pollutant property	NSPS	
	Maximum for any 1 day	Monthly average
TCDD [a]	<ML [b]	(c)
TCDF [a]	<ML [b]	(c)
Chloroform [a]	(d)	(d)
Trichlorosyringol [a]	<ML [b]	(c)
3,4,5-trichlorocatechol [a]	<ML [b]	(c)
3,4,6-trichlorocatechol [a]	<ML [b]	(c)
3,4,5-trichloroguaiacol [a]	<ML [b]	(c)
3,4,6-trichloroguaiacol [a]	<ML [b]	(c)
4,5,6-trichloroguaiacol [a]	<ML [b]	(c)
2,4,5-trichlorophenol [a]	<ML [b]	(c)
2,4,6-trichlorophenol [a]	<ML [b]	(c)
Tetrachlorocatechol [a]	<ML [b]	(c)
Tetrachloroguaiacol	<ML [b]	(c)
2,3,4,6-tetrachlorophenol [a]	<ML [b]	(c)
Pentachlorophenol [a]	<ML [b]	(c)

	Continuous dischargers		Non-continuous dischargers	
	Maximum for any 1 day	Monthly average	Maximum for any 1 day	Annual average
	kg/kkg (or pounds per 1,000 lb) of product			
AOX	(d)	(d)	(d)	(d)
COD	(d)	(d)	(d)	(d)

[a] These limitations do not apply with respect to fiber lines that use a TCF bleaching process as disclosed by the discharger in its permit application under 40 CFR 122.21(g)(3) and certified under 40 CFR 122.22.
[b] "<ML" means less than the minimum level specified in § 430.01(i) for the particular pollutant.
[c] This regulation does not specify this type of limitation for this pollutant; however, permitting authorities may do so as appropriate.
[d] [Reserved].

(ii) The following standards apply to all new sources within the specialty grade sulfite pulp segment with respect to each fiber line that uses exclusively TCF bleaching processes, as disclosed by the discharger in its NPDES permit application under 40 CFR 122.21(g)(3) and certified under 40 CFR 122.22:

SUBPART E—PRODUCTION OF SPECIALTY GRADE SULFITE PULPS

Pollutant or pollutant property	NSPS (TCF)			
	Continuous dischargers		Non-continuous dischargers	
	Maximum for any 1 day	Monthly average	Maximum for any 1 day	Annual average
	kg/kkg (or pounds per 1000 lb) of product			
AOX	<ML [a]	(b)	<ML [a]	(b)
COD	(c)	(c)	(c)	(c)

[a] "<ML" means less than the minimum level specified in § 430.01(i) for the particular pollutant.
[b] This regulation does not specify this type of limitation for this pollutant; however, permitting authorities may do so as appropriate.
[c] [Reserved].

(c) The following standards apply to each new source regardless of when it commenced discharge, unless it certifies to the permitting authority that it is not using these compounds as biocides. Also, for non-continuous dischargers, concentration limitations (mg/l) shall apply. Concentration limitations will only apply to non-continuous dischargers:

SUBPART E

[Supplemental NSPS]

Pollutant or pollutant property	Maximum for any 1 day	
	kg/kkg (or pounds per 1,000 lb) of product	Milligrams/liter
Pentachlorophenol	0.00058exp(0.017x)	((0.015)(9.12)exp(0.017x))/y
Trichlorophenol	0.0036exp(0.017x)	((0.094)(9.12)exp(0.017x))/y
x = percent sulfite pulp in final product.		
y = wastewater discharged in kgal per ton of product.		

(d) Pursuant to 40 CFR 122.44(i) and 122.45(h), a discharger must demonstrate compliance with the standards in paragraphs (b)(2) or (b)(3) of this section, as applicable, by monitoring for all pollutants (except for AOX, COD, BOD5, TSS, and pH) at the point where the wastewater containing those pollutants leaves the bleach plant. The permitting authority may impose effluent limitations and/or monitoring requirements on internal wastestreams for any other pollutants covered in this section as appropriate under 40 CFR 122.44(i) and 122.45(h).

§ 430.56 Pretreatment standards for existing sources (PSES).

Except as provided in 40 CFR 403.7 and 403.13, any existing source subject to this subpart that introduces pollutants into a publicly owned treatment works must: comply with 40 CFR part 403; and achieve the following pretreatment standards for existing sources (PSES).

(a) The following pretreatment standards must be attained on or before April 16, 2001.

(1) The following pretreatment standards apply to all indirect dischargers in the calcium-, magnesium-, or sodium-based sulfite pulp segment:

SUBPART E

[Production of Calcium-, Magnesium-, or Sodium-based Sulfite Pulps]

Pollutant or pollutant property	PSES	
	Maximum for any 1 day	Monthly average
	kg/kkg (or pounds per 1,000 lb) of product	
AOX	>ML [a]	([b])

[a] "<ML" means less than the minimum level specified in § 430.01(i) for the particular pollutant.
[b] This regulation does not specify this type of limitation for this pollutant; however, pretreatment control authorities may do so as appropriate.

(2)(i) The following pretreatment standards apply to all indirect dischargers in the ammonium-based sulfite pulp segment:

SUBPART E—PRODUCTION OF AMMONIUM-BASED SULFITE PULPS

Pollutant or pollutant property	PSES	
	Maximum for any 1 day	Monthly average
TCDD [a]	<ML [b]	([c])
TCDF [a]	<ML [b]	([c])
Trichlorosyringol [a]	<ML [b]	([c])
3,4,5-trichlorocatechol [a]	<ML [b]	([c])
3,4,6-trichlorocatechol [a]	<ML [b]	([c])
3,4,5-trichloroguaiacol [a]	<ML [b]	([c])
3,4,6-trichloroguaiacol [a]	<ML [b]	([c])
4,5,6-trichloroguaiacol [a]	<ML [b]	([c])
2,4,5-trichlorophenol [a]	<ML [b]	([c])
2,4,6-trichlorophenol [a]	<ML [b]	([c])
Tetrachlorocatechol [a]	<ML [b]	([c])
Tetrachloroguaiacol [a]	<ML [b]	([c])
2,3,4,6-tetrachlorophenol [a]	<ML [b]	([c])
Pentachlorophenol [a]	<ML [b]	([c])

[a] These limitations do not apply with respect to fiber lines operated by any indirect discharger that discloses to the pretreatment control authority, at the time it submits the report required under 40 CFR 403.12(b), (d), or (e), that it uses a TCF bleaching process at that fiber line.
[b] "<ML" means less than the minimum level specified in § 430.01(i) for the particular pollutant.
[c] This regulation does not specify this type of limitation for this pollutant; however, pretreatment control authorities may do so as appropriate.

(ii) The following pretreatment standards apply with respect to each new source fiber line operated by an indirect discharger producing ammonium-based sulfite pulps if the indirect discharger discloses to the pretreatment control authority in a report submitted under 40 CFR 403.12(b) that it uses exclusively TCF bleaching processes at that fiber line:

SUBPART E—PRODUCTION OF AMMONIUM-BASED SULFITE PULPS

Pollutant or pollutant parameter	PSNS (TCF)	
	Maximum for any 1 day	Monthly average
AOX	<ML [a]	([b])

[a] "<ML" means less than the minimum level specified in § 430.01(i) for the particular pollutant.
[b] This regulation does not specify this type of limitation for this pollutant; however, pretreatment control authorities may do so as appropriate.

(3)(i) The following pretreatment standards apply to all indirect dischargers in the specialty grade sulfite pulp segment:

SUBPART E—PRODUCTION OF SPECIALTY GRADE SULFITE PULPS

Pollutant or pollutant property	PSES	
	Maximum for any 1 day	Monthly average
TCDD [a]	<ML [b]	([c])
TCDF [a]	<ML [b]	([c])
Trichlorosyringol [a]	<ML [b]	([c])
3,4,5-trichlorocatechol [a]	<ML [b]	([c])
3,4,6-trichlorocatechol [a]	<ML [b]	([c])
3,4,5-trichloroguaiacol [a]	<ML [b]	([c])
3,4,6-trichloroguaiacol [a]	<ML [b]	([c])
4,5,6-trichloroguaiacol [a]	<ML [b]	([c])
2,4,5-trichlorophenol [a]	<ML [b]	([c])
2,4,6-Trichlorophenol [a]	<ML [b]	([c])
Tetrachlorocatechol [a]	<ML [b]	([c])
Tetrachloroguaiacol [a]	<ML [b]	([c])
2,3,4,6-tetrachlorophenol [a]	<ML [b]	([c])
Pentachlorophenol [a]	<ML [b]	([c])

[a] These limitations do not apply with respect to fiber lines operated by any indirect discharger that discloses to the pretreatment control authority, at the time it submits the report required under 40 CFR 403.12(b), (d), or (e), that it uses a TCF bleaching process at that fiber line.
[b] "<ML" means less than the minimum level specified in § 430.01(i) for the particular pollutant.
[c] This regulation does not specify this type of limitation for this pollutant; however, pretreatment control authorities may do so as appropriate.

(ii) The following pretreatment standards apply with respect to each fiber line operated by an indirect discharger producing specialty grade sulfite pulps if the indirect discharger discloses to the pretreatment control authority in a report submitted under 40 CFR 403.12(b) that it uses exclusively TCF bleaching processes at that fiber line. These pretreatment standards must be attained on or before April 16, 2001:

SUBPART E

Pollutant or pollutant parameter	PSES (TCF)	
	Maximum for any 1 day	Monthly average
AOX	<ML [a]	([b])

[a] "<ML" means less than the minimum level specified in § 430.01(i) for the particular pollutant.
[b] This regulation does not specify this type of limitation for this pollutant; however, pretreatment control authorities may do so as appropriate.

(b) The following pretreatment standards apply to each indirect discharger, in accordance with the previous subcategorization scheme, unless it certifies to the pretreatment control authority that it is not using these compounds as biocides. In cases when POTWs find it necessary to impose mass effluent limitations, equivalent mass limitations are provided as guidance:

SUBPART E

Pollutant or pollutant property	Supplemental PSES	
	Maximum for any 1 day	
	kg/kkg (or pounds per 1,000 lb) of product	Milligrams/liter
Pentachlorophenol	0.00058exp(0.017x)	((0.011)(12.67)exp(0.017x))/y

SUBPART E—Continued

Pollutant or pollutant property	Supplemental PSES	
	Maximum for any 1 day	
	kg/kkg (or pounds per 1,000 lb) of product	Milligrams/liter
Trichlorophenol x = percent sulfite pulp in final product. y = wastewater discharged in kgal per ton of product.	0.0043exp(0.017x)	((0.082)(12.67)exp(0.017x))/y

(c) An indirect discharger must demonstrate compliance with the pretreatment standards in paragraphs (a)(2) or (a)(3) of this section, as applicable, by monitoring for all pollutants at the point where the wastewater containing those pollutants leaves the bleach plant.

§ 430.57 Pretreatment standards for new sources (PSNS).

Except as provided in 40 CFR 403.7, any new source subject to this subpart that introduces pollutants into a publicly owned treatment works must: comply with 40 CFR part 403; and achieve the following pretreatment standards for new sources (PSNS).

(a) (1) The following pretreatment standards apply to each indirect discharger in the calcium-, magnesium-, or sodium-based sulfite pulp segment that is a new source:

SUBPART E

[Production of Calcium-, Magnesium-, or Sodium-Based Sulfite Pulps]

Pollutant or pollutant property	PSNS	
	Maximum for any 1 day	Monthly average
	kg/kkg (or pounds per 1,000 lb) of product	
AOX	<ML [a]	([b])

[a] "<ML" means less than the minimum level specified in § 430.01(i) for the particular pollutant.
[b] This regulation does not specify this type of limitation for this pollutant; however, pretreatment control authorities may do so as appropriate.

(2)(i) The following standards apply to each indirect discharger in the ammonium-based sulfite pulp segment that is a new source:

SUBPART E.—PRODUCTION OF AMMONIUM-BASED SULFITE PULPS

Pollutant or pollutant property	PSNS	
	Maximum for any 1 day	Monthly average
TCDD [a]	<ML [b]	([c])
TCDF [a]	<ML [b]	([c])
Trichlorosyringol [a]	<ML [b]	([c])
3,4,5-trichlorocatechol [a]	<ML [b]	([c])
3,4,6-trichlorocatechol [a]	<ML [b]	([c])
3,4,5-trichloroguaiacol [a]	<ML [b]	([c])
3,4,6-trichloroguaiacol [a]	<ML [b]	([c])
4,5,6-trichloroguaiacol [a]	<ML [b]	([c])
2,4,5-trichlorophenol [a]	<ML [b]	([c])
2,4,6-trichlorophenol [a]	<ML [b]	([c])
Tetrachlorocatechol [a]	<ML [b]	([c])
Tetrachloroguaiacol [a]	<ML [b]	([c])
2,3,4,6-tetrachlorophenol [a]	<ML [b]	([c])
Pentachlorophenol [a]	<ML [b]	([c])

[a] These limitations do not apply with respect to fiber lines operated by any indirect discharger that discloses to the pretreatment control authority, at the time it submits the report required under 40 CFR 403.12 (b), (d), or (e), that it uses a TCF bleaching process at that fiber line.
[b] "<ML" means less than the minimum level specified in § 430.01(i) for the particular pollutant.
[c] This regulation does not specify this type of limitation for this pollutant; however, pretreatment control authorities may do so as appropriate.

(ii) The following pretreatment standards apply with respect to each new source fiber line operated by an indirect discharger producing ammonium-based sulfite pulps if the indirect discharger discloses to the pretreatment control authority in a report submitted under 40 CFR 403.12(b) that it uses exclusively TCF bleaching processes at that fiber line:

SUBPART E.—PRODUCTION OF AMMONIUM-BASED SULFITE PULPS

Pollutant or pollutant parameter	PSNS (TCF)	
	Maximum for any 1 day	Monthly average
AOX	<ML [a]	([b])

[a] "<ML" means less than the minimum level specified in § 430.01(i) for the particular pollutant.
[b] This regulation does not specify this type of limitation for this pollutant; however, pretreatment control authorities may do so as appropriate.

(3)(i) The following pretreatment standards apply to each indirect discharger in the specialty grade sulfite pulp segment that is a new source:

SUBPART E.—PRODUCTION OF SPECIALTY GRADE SULFITE PULPS

Pollutant or pollutant property	PSNS	
	Maximum for any 1 day	Monthly average
TCDD [a]	<ML [b]	([c])
TCDF [a]	<ML [b]	([c])
Trichlorosyringol [a]	<ML [b]	([c])
3,4,5-trichlorocatechol [a]	<ML [b]	([c])
3,4,6-trichlorocatechol [a]	<ML [b]	([c])
3,4,5-trichloroguaiacol [a]	<ML [b]	([c])
3,4,6-trichloroguaiacol [a]	<ML [b]	([c])
4,5,6-trichloroguaiacol [a]	<ML [b]	([c])
2,4,5-trichlorophenol [a]	<ML [b]	([c])
2,4,6-trichlorophenol [a]	<ML [b]	([c])
Tetrachlorocatechol [a]	<ML [b]	([c])
Tetrachloroguaiacol [a]	<ML [b]	([c])
2,3,4,6-tetrachlorophenol [a]	<ML [b]	([c])
Pentachlorophenol [a]	<ML [b]	([c])

[a] These limitations do not apply with respect to fiber lines operated by any indirect discharger that discloses to the pretreatment control authority, at the time it submits the report required under 40 CFR 403.12 (b), (d), or (e), that it uses a TCF bleaching process at that fiber line.
[b] "<ML" means less than the minimum level specified in § 430.01(i) for the particular pollutant.
[c] This regulation does not specify this type of limitation for this pollutant; however, pretreatment control authorities may do so as appropriate.

(ii) The following pretreatment standards apply with respect to each new source fiber line operated by an indirect discharger producing specialty grade sulfite pulps if the indirect discharger discloses to the pretreatment control authority in a report submitted under 40 CFR 403.12(b) that it uses exclusively TCF bleaching processes at that fiber line:

SUBPART E.—PRODUCTION OF SPECIALTY GRADE SULFITE PULPS

Pollutant or pollutant parameter	PSNS (TCF)	
	Maximum for any 1 day	Monthly average
AOX	<ML [a]	([b])

[a] "<ML" means less than the minimum level specified in § 430.01(i) for the particular pollutant.
[b] This regulation does not specify this type of limitation for this pollutant; however, pretreatment control authorities may do so as appropriate.

(b) The following pretreatment standards shall apply to each new source indirect dischargers unless the indirect discharger certifies to the pretreatment control authority that it is not using these compounds as biocides. In cases when POTWs find it necessary to impose mass effluent standards, equivalent mass standards are provided as guidance:

SUBPART E

Pollutant or pollutant property	Supplemental PSNS	
	Maximum for any 1 day	
	kg/kkg (or pounds per 1,000 lb) of product	Milligrams/liter
Pentachlorophenol	0.00058exp (0.017x).	((0.015)(9.12)exp(0.017x))/y
Trichlorophenol	0.0043exp (0.017x).	((0.114)(9.12)exp(0.017x))/y
x = percent sulfite pulp in final product. y = wastewater discharged in kgal per ton of product.		

(c) An indirect discharger must demonstrate compliance with the pretreatment standards in paragraphs (a)(2) or (a)(3) of this section, as applicable, by monitoring for all pollutants at the point where the wastewater containing those pollutants leaves the bleach plant.

§ 430.58 Best management practices (BMPs).

The definitions and requirements set forth in 40 CFR 430.03 apply to facilities in this subpart.

Subpart F—Semi-Chemical Subcategory

§ 430.60 Applicability; description of the semi-chemical subcategory.

The provisions of this subpart are applicable to discharges resulting from the integrated production of pulp and paper at semi-chemical mills.

§ 430.61 Specialized definitions.

For the purpose of this subpart, the general definitions, abbreviations, and methods of analysis set forth in 40 CFR part 401 and § 430.01 of this part shall apply to this subpart.

§ 430.62 Effluent limitations representing the degree of effluent reduction attainable by the application of the best practicable control technology currently available (BPT).

Except as provided in 40 CFR 125.30 through 125.32, any existing point source subject to this subpart must achieve the following effluent limitations representing the degree of effluent reduction attainable by the application of the best practicable control technology currently available (BPT):

SUBPART F

[BPT effluent limitations for ammonia base mills]

Pollutant or pollutant property	Kg/kkg (or pounds per 1,000 lb) of product	
	Maximum for any 1 day	Average of daily values for 30 consecutive days
BOD5	8.0	4.0
TSS	10.0	5.0
pH	(1)	(1)

1 Within the range of 6.0 to 9.0 at all times.

SUBPART F

[BPT effluent limitations for sodium base mills]

Pollutant or pollutant property	Kg/kkg (or pounds per 1,000 lb) of product	
	Maximum for any 1 day	Average of daily values for 30 consecutive days
BOD5	8.7	4.35
TSS	11.0	5.5
pH	(1)	(1)

1 Within the range of 6.0 to 9.0 at all times.

§ 430.63 Effluent limitations guidelines representing the degree of effluent reduction attainable by the application of the best conventional pollutant control technology (BCT).

Except as provided in 40 CFR 125.30 through 125.32, any existing point source subject to this subpart shall achieve the following effluent limitations representing the degree of effluent reduction attainable by the application of the best conventional pollutant control technology (BCT): The limitations shall be the same as those specified for conventional pollutants (which are defined in 40 CFR 401.16) in § 430.62 of this subpart for the best practicable control technology currently available (BPT), except that non-continuous dischargers shall not be subject to the maximum day and average-of-30-consecutive-days limitations, but shall be subject to annual average effluent limitations determined by dividing the average-of-30-consecutive-days limitations for BOD5 by 1.36 and TSS by 1.36.

§ 430.64 Effluent limitations representing the degree of effluent reduction attainable by the application of the best available technology economically achievable (BAT).

Except as provided in 40 CFR 125.30 through 125.32, any existing point source subject to this subpart where chlorophenolic-containing biocides are used must achieve the following effluent limitations representing the degree of effluent reduction attainable by the application of the best available technology economically achievable (BAT). Non-continuous dischargers shall not be subject to the maximum day mass limitations in kg/kkg (lb/1,000 lb), but shall be subject to concentration limitations. Concentration limitations are only applicable to non-continuous dischargers. Permittees not using chlorophenolic-containing biocides must certify to the permit-issuing authority that they are not using these biocides:

SUBPART F

Pollutant or pollutant property	BAT effluent limitations	
	Maximum for any 1 day	
	Kg/kkg (or pounds per 1,000 lb) of product	Milligrams/liter
Pentachlorophenol	0.0012	(0.029)(10.3)/y
Trichlorophenol	0.00043	(0.010)(10.3)/y
y = wastewater discharged in kgal per ton of product.		

§ 430.65 New source performance standards (NSPS).

Any new source subject to this subpart must achieve the following new source performance standards (NSPS), except that non-continuous dischargers shall not be subject to the maximum day and average of 30 consecutive days effluent limitations for BOD5 and TSS, but shall be subject to annual average effluent limitations. Also, for non-continuous dischargers, concentration limitations (mg/l) shall apply, where provided. Concentration limitations will only apply to non-continuous dischargers. Only facilities where chlorophenolic-containing biocides are used shall be subject to pentachlorophenol and trichlorophenol limitations. Permittees not using chlorophenolic-containing biocides must certify to the permit-issuing authority that they are not using these biocides:

SUBPART F

[NSPS]

Pollutant or pollutant property	Kg/kkg (or pounds per 1,000 lb) of product		
	Continuous dischargers		Non-continuous dischargers (annual average)
	Maximum for any 1 day	Average of daily values for 30 consecutive days	
BOD5	3.0	1.6	0.84
TSS	5.8	3.0	1.6
pH	(1)	(1)	(1)

	Maximum for any 1 day	
	Kg/kkg (or pounds per 1,000 lb) of product	Milligrams/liter
Pentachlorophenol	0.0012	(0.041)(7.3)/y
Trichlorophenol	0.00043	(0.014)(7.3)/y
y = wastewater discharged in kgal per ton at all times.		

[1] Within the range of 5.0 to 9.0 at all times.

§ 430.66 Pretreatment standards for existing sources (PSES).

Except as provided in 40 CFR 403.7 and 403.13, any existing source subject to this subpart that introduces pollutants into a publicly owned treatment works must: comply with 40 CFR part 403; and achieve the following pretreatment standards for existing sources (PSES) if it uses chlorophenolic-containing biocides. Permittees not using chlorophenolic-containing biocides must certify to the permit-issuing authority that they are not using these biocides. PSES must be attained on or before July 1, 1984:

SUBPART F

Pollutant or pollutant property	PSES	
	Maximum for any 1 day	
	Milligrams/liter	Kg/kkg (or pounds per 1,000 lb) of product [a]
Pentachlorophenol	(0.032)(10.3)/y	0.0014

SUBPART F—Continued

Pollutant or pollutant property	PSES	
	Maximum for any 1 day	
	Milligrams/liter	Kg/kkg (or pounds per 1,000 lb) of product [a]
Trichlorophenol	(0.010)(10.3)/y	0.00043
y = wastewater discharged in kgal per ton of product.		

[a] The following equivalent mass limitations are provided as guidance in cases when POTWs find it necessary to impose mass equivalent limitations.

§ 430.67 Pretreatment standards for new sources (PSNS).

Except as provided in 40 CFR 403.7, any new source subject to this subpart that introduces pollutants into a publicly owned treatment works must: comply with 40 CFR part 403; and achieve the following pretreatment standards for new sources (PSNS) if it uses chlorophenolic-containing biocides. Permittees not using chlorophenolic-containing biocides must certify to the permit-issuing authority that they are not using these biocides:

SUBPART F

Pollutant or pollutant property	PSNS	
	Maximum for any 1 day	
	Milligrams/liter	Kg/kkg (or pounds per 1,000 lb) of product [a]
Pentachlorophenol	(0.045)(7.3)/y	0.0014
Trichlorophenol	(0.014)(7.3)/y	0.00043
y = wastewater discharged in kgal per ton of product.		

[a] The following equivalent mass limitations are provided as guidance in cases when POTWs find it necessary to impose mass equivalent limitations.

Subpart G—Mechanical Pulp Subcategory

§ 430.70 Applicability; description of the mechanical pulp subcategory.

The provisions of this subpart are applicable to discharges resulting from: the production of pulp and paper at groundwood chemi-mechanical mills; the production of pulp and paper at groundwood mills through the application of the thermo-mechanical process; the integrated production of pulp and coarse paper, molded pulp products, and newsprint at groundwood mills; and the integrated production of pulp and fine paper at groundwood mills.

§ 430.71 Specialized definitions.

For the purpose of this subpart, the general definitions, abbreviations, and methods of analysis set forth in 40 CFR part 401 and § 430.01 of this part shall apply to this subpart.

§ 430.72 Effluent limitations representing the degree of effluent reduction attainable by the application of the best practicable control technology currently available (BPT).

(a) Except as provided in 40 CFR 125.30 through 125.32, any existing point source subject to this subpart must achieve the following effluent limitations representing the degree of effluent reduction attainable by the application of the best practicable control technology currently available (BPT), except that non-continuous dischargers shall not be subject to the maximum day and average of 30 consecutive days limitations but shall be subject to annual average effluent limitations:

SUBPART G

[BPT effluent limitations for mechanical pulp facilities where pulp and paper at groundwood chemi-mechanical mills are produced]

Pollutant or pollutant property	Kg/kkg (or pounds per 1,000 lb) of product		
	Continuous dischargers		Non-continuous dischargers (annual average)
	Maximum for any 1 day	Average of daily values for 30 consecutive days	
BOD5	13.5	7.05	3.96
TSS	19.75	10.65	5.85

SUBPART G—Continued

[BPT effluent limitations for mechanical pulp facilities where pulp and paper at groundwood chemi-mechanical mills are produced]

Pollutant or pollutant property	Kg/kkg (or pounds per 1,000 lb) of product		
	Continuous dischargers		Non-continuous dischargers (annual average)
	Maximum for any 1 day	Average of daily values for 30 consecutive days	
pH	(1)	(1)	(1)

1 Within the range of 5.0 to 9.0 at all times.

SUBPART G

[BPT effluent limitations for mechanical pulp facilities where pulp and paper at groundwood mills are produced through the application of the thermo-mechanical process]

Pollutant or pollutant property	Kg/kkg (or pounds per 1,000 lb) of product		
	Continuous dischargers		Non-continuous dischargers (annual average)
	Maximum for any 1 day	Average of daily values for 30 consecutive days	
BOD5	10.6	5.55	3.12
TSS	15.55	8.35	4.59
pH	(1)	(1)	(1)

1 Within the range of 5.0 to 9.0 at all times.

SUBPART G

[BPT effluent limitations for mechanical pulp facilities where the integrated production of pulp and coarse paper, molded pulp products, and newsprint at groundwood mills occurs]

Pollutant or pollutant property	Kg/kkg (or pounds per 1,000 lb) of product		
	Continuous dischargers		Non-continuous dischargers (annual average)
	Maximum for any 1 day	Average of daily values for 30 consecutive days	
BOD5	7.45	3.9	2.19
TSS	12.75	6.85	3.76
pH	(1)	(1)	(1)

1 Within the range of 5.0 to 9.0 at all times.

SUBPART G

[BPT effluent limitations for mechanical pulp facilities where the integrated production of pulp and fine paper at groundwood mills occurs]

Pollutant or pollutant property	Kg/kkg (or pounds per 1,000 lb) of product		
	Continuous dischargers		Non-continuous dischargers (annual average)
	Maximum for any 1 day	Average of daily values for 30 consecutive days	
BOD5	6.85	3.6	2.0
TSS	11.75	6.3	3.5
pH	(1)	(1)	(1)

1 Within the range of 5.0 to 9.0 at all times.

(b) The following limitations establish the quantity or quality of pollutants or pollutant properties, controlled by this section, resulting from the use of wet barking operations, which may be discharged by a point source subject to the provisions of this subpart. These limitations are in addition to the limitations set forth in paragraph (a) of this section and shall be calculated using the proportion of the mill's total production due to use of logs which are subject to such operations. Non-continuous dischargers shall not be subject to the maximum day and average of 30 consecutive days limitations, but shall be subject to annual average effluent limitations:

SUBPART G

[BPT effluent limitations for mechanical pulp facilities where pulp and paper at groundwood chemi-mechanical mills are produced]

Pollutant or pollutant property	Kg/kkg (or pounds per 1,000 lb) of product		
	Continuous dischargers		Non-continuous dischargers (annual average)
	Maximum for any 1 day	Average of daily values for 30 consecutive days	
BOD5	0.9	0.45	0.25
TSS	2.6	1.45	0.80
pH	(1)	(1)	(1)

1 Within the range of 5.0 to 9.0 at all times.

SUBPART G

[BPT effluent limitations for mechanical pulp facilities where pulp and paper at groundwood mills are produced through the application of the thermo-mechanical process]

Pollutant or pollutant property	Kg/kkg (or pounds per 1,000 lb) of product		
	Continuous dischargers		Non-continuous dischargers (annual average)
	Maximum for any 1 day	Average of daily values for 30 consecutive days	
BOD5	0.9	0.45	0.3
TSS	2.7	1.45	0.75
pH	(1)	(1)	(1)

1 Within the range of 5.0 to 9.0 at all times.

SUBPART G

[BPT effluent limitations for mechanical pulp facilities where the integrated production of pulp and coarse paper, molded pulp products, and newsprint at groundwood mills occurs]

Pollutant or pollutant property	Kg/kkg (or pounds per 1,000 lb) of product		
	Continuous dischargers		Non-continuous dischargers (annual average)
	Maximum for any 1 day	Average of daily values for 30 consecutive days	
BOD5	1.15	0.55	0.30
TSS	2.0	1.1	0.60
pH	(1)	(1)	(1)

1 Within the range of 5.0 to 9.0 at all times.

SUBPART G

[BPT effluent limitations for mechanical pulp facilities where the integrated production of pulp and fine paper at groundwood mills occurs]

Pollutant or pollutant property	Kg/kkg (or pounds per 1,000 lb) of product		
	Continuous dischargers		Non-continuous dischargers (annual average)
	Maximum for any 1 day	Average of daily values for 30 consecutive days	
BOD5	1.1	0.55	0.35
TSS	1.95	1.1	0.60
pH	(1)	(1)	(1)

1 Within the range of 5.0 to 9.0 at all times.

(c) The following limitations establish the quantity or quality of pollutants or pollutant parameters, controlled by this section, resulting from the use of log washing or chip washing operations, which may be discharged by a point source subject to the provisions of this subpart. These limitations are in addition to the limitations set forth in paragraph (a) of this section and shall be calculated using the proportion of the mill's total production due to use of logs and/or chips which are subject to such operations. Non-continuous dischargers shall not be subject to the maximum day and average of 30 consecutive days limitations, but shall be subject to the annual average effluent limitations:

SUBPART G

[BPT effluent limitations for mechanical pulp facilities where pulp and paper at groundwood chemi-mechanical mills are produced]

Pollutant or pollutant property	Kg/kkg (or pounds per 1,000 lb) of product		
	Continuous dischargers		Non-continuous dischargers (annual average)
	Maximum for any 1 day	Average of daily values for 30 consecutive days	
BOD5	0.05	0.05	0.05
TSS	0.25	0.15	0.10
pH	(1)	(1)	(1)

1 Within the range of 5.0 to 9.0 at all times.

SUBPART G

[BPT effluent limitations for mechanical pulp facilities where pulp and paper at groundwood mills are produced through the application of the thermo-mechanical process]

Pollutant or pollutant property	Kg/kkg (or pounds per 1,000 lb) of product		
	Continuous dischargers		Non-continuous dischargers (annual average)
	Maximum for any 1 day	Average of daily values for 30 consecutive days	
BOD5	0.05	0.05	0.05
TSS	0.30	0.15	0.05
pH	(1)	(1)	(1)

1 Within the range of 5.0 to 9.0 at all times.

SUBPART G

[BPT effluent limitations for mechanical pulp facilities where the integrated production of pulp and coarse paper, molded pulp products, and newsprint at groundwood mills occurs]

Pollutant or pollutant property	Kg/kkg (or pounds per 1,000 lb) of product		
	Continuous dischargers		Non-continuous dischargers (annual average)
	Maximum for any 1 day	Average of daily values for 30 consecutive days	
BOD5	0.15	0.05	0.05
TSS	0.20	0.15	0.10
pH	(1)	(1)	(1)

1 Within the range of 5.0 to 9.0 at all times.

SUBPART G

[BPT effluent limitations for mechanical pulp facilities where the integrated production of pulp and fine paper at groundwood mills occurs]

Pollutant or pollutant property	Kg/kkg (or pounds per 1,000 lb) of product		
	Continuous dischargers		Non-continuous dischargers (annual average)
	Maximum for any 1 day	Average of daily values for 30 consecutive days	
BOD5	0.15	0.05	0.05
TSS	0.2	0.15	0.10
pH	(1)	(1)	(1)

1 Within the range of 5.0 to 9.0 at all times.

(d) The following limitations establish the quantity or quality of pollutants or pollutant properties, controlled by this section, resulting from the use of log flumes or log ponds, which may be discharged by a point source subject to the provisions of this subpart. These limitations are in addition to the limitations set forth in paragraph (a) of this section and shall be calculated using the proportion of the mill's total production due to use of logs which are subject to such operations. Non-continuous dischargers shall not be subject to the maximum day and average of 30 consecutive days limitations but shall be subject to the annual average effluent limitations:

SUBPART G

[BPT effluent limitations for mechanical pulp facilities where pulp and paper at groundwood chemi-mechanical mills are produced]

Pollutant or pollutant property	Kg/kkg (or pounds per 1,000 lb) of product		
	Continuous dischargers		Non-continuous dischargers (annual average)
	Maximum for any 1 day	Average of daily values for 30 consecutive days	
BOD5	0.15	0.05	0.05
TSS	0.55	0.3	0.15
pH	(1)	(1)	(1)

1 Within the range of 5.0 to 9.0 at all times.

SUBPART G

[BPT effluent limitations for mechanical pulp facilities where pulp and paper at groundwood mills are produced through the application of the thermo-mechanical process]

Pollutant or pollutant property	Kg/kkg (or pounds per 1,000 lb) of product		
	Continuous dischargers		Non-continuous dischargers (annual average)
	Maximum for any 1 day	Average of daily values for 30 consecutive days	
BOD5	0.15	0.15	0.05
TSS	0.60	0.35	0.15
pH	(1)	(1)	(1)

1 Within the range of 5.0 to 9.0 at all times.

SUBPART G

[BPT effluent limitations for mechanical pulp facilities where the integrated production of pulp and coarse paper, molded pulp products, and newsprint at groundwood mills occurs]

Pollutant or pollutant property	Kg/kkg (or pounds per 1,000 lb) of product		
	Continuous dischargers		Non-continuous dischargers (annual average)
	Maximum for any 1 day	Average of daily values for 30 consecutive days	
BOD5	0.25	0.1	0.05
TSS	0.45	0.25	0.15
pH	(1)	(1)	(1)

1 Within the range of 5.0 to 9.0 at all times.

SUBPART G

[BPT effluent limitations for mechanical pulp facilities where the integrated production of pulp and fine paper at groundwood mills occurs]

Pollutant or pollutant property	Kg/kkg (or pounds per 1,000 lb) of product		
	Continuous dischargers		Non-continuous dischargers (annual average)
	Maximum for any 1 day	Average of daily values for 30 consecutive days	
BOD5	0.2	0.05	0.05
TSS	0.4	0.25	0.15
pH	(1)	(1)	(1)

1 Within the range of 5.0 to 9.0 at all times.

(e) For those mills using zinc hydrosulfite as a bleaching agent in the manufacturing process, the following effluent limitations are to be added to the base limitations set forth in paragraph (a) of this section. Permittees not using zinc hydrosulfite as a bleaching agent must certify to the permit issuing authority that they are not using this bleaching compound. Non-continuous dischargers shall not be subject to the maximum day and average of 30 consecutive days effluent limitations, but shall be subject to annual average effluent limitations:

SUBPART G

[BPT effluent limitations for mechanical pulp facilities where pulp and paper at groundwood chemi-mechanical mills are produced]

Pollutant or pollutant property	Kg/kkg (or pounds per 1,000 lb) of product		
	Continuous dischargers		Non-continuous dischargers (annual average)
	Maximum for any 1 day	Average of daily values for 30 consecutive days	
Zinc	0.34	0.17	0.11

SUBPART G

[BPT effluent limitations for mechanical pulp facilities where pulp and paper at groundwood mills are produced through the application of the thermo-mechanical process]

Pollutant or pollutant property	Kg/kkg (or pounds per 1,000 lb) of product		
	Continuous dischargers		Non-continuous dischargers (annual average)
	Maximum for any 1 day	Average of daily values for 30 consecutive days	
Zinc	0.26	0.13	0.09

SUBPART G

[BPT effluent limitations for mechanical pulp facilities where the integrated production of pulp and coarse paper, molded pulp products, and newsprint at groundwood mills occurs]

Pollutant or pollutant property	Kg/kkg (or pounds per 1,000 lb) of product		
	Continuous dischargers		Non-continuous dischargers (annual average)
	Maximum for any 1 day	Average of daily values for 30 consecutive days	
Zinc	0.30	0.15	0.10

SUBPART G

[BPT effluent limitations for mechanical pulp facilities where the integrated production of pulp and fine paper at groundwood mills occurs]

Pollutant or pollutant property	Kg/kkg (or pounds per 1,000 lb) of product		
	Continuous dischargers		Non-continuous dischargers (annual average)
	Maximum for any 1 day	Average of daily values for 30 consecutive days	
Zinc	0.275	0.135	0.090

§ 430.73 Effluent limitations guidelines representing the degree of effluent reduction attainable by the application of the best conventional pollutant control technology (BCT).

(a)(1) The following applies to: mechanical pulp facilities where the integrated production of pulp and coarse paper, molded pulp products, and newsprint at groundwood mills occurs; and mechanical pulp facilities where the integrated production of pulp and fine paper at groundwood mills occurs:

(2) Except as provided in 40 CFR 125.30 through 125.32, any existing point source subject to this subpart shall achieve the following effluent limitations representing the degree of effluent reduction attainable by the application of the best conventional

pollutant control technology (BCT): The limitations shall be the same as those specified for conventional pollutants (which are defined in 40 CFR 401.16) in § 430.72 of this subpart for the best practicable control technology currently available (BPT).

(b) [Reserved]

§ 430.74 Effluent limitations representing the degree of effluent reduction attainable by the application of the best available technology economically achievable (BAT).

(a) The following applies to mechanical pulp facilities where pulp and paper at groundwood mills are produced through the application of the thermo-mechanical process; mechanical pulp facilities where the integrated production of pulp and coarse paper, molded pulp products, and newsprint at groundwood mills occurs; and mechanical pulp facilities where the integrated production of pulp and fine paper at groundwood mills occurs: except as provided in 40 CFR 125.30 through 125.32, any existing point source subject to this subpart must achieve the following effluent limitations representing the degree of effluent reduction attainable by the application of the best available technology economically achievable (BAT), except that non-continuous dischargers shall not be subject to the maximum day mass limitations in kg/kkg (lb/1000 lb), but shall be subject to concentration limitations. Concentration limitations are only applicable to non-continuous dischargers. Pentachlorophenol and trichlorophenol limitations are only applicable at facilities where chlorophenolic-containing biocides are used. Permittees not using chlorophenolic-containing biocides must certify to the permit-issuing authority that they are not using these biocides. Zinc limitations are only applicable at facilities where zinc hydrosulfite is used as a bleaching agent. Permittees not using zinc hydrosulfite as a bleaching agent must certify to the permit issuing authority that they are not using this bleaching compound:

SUBPART G

[BAT effluent limitations for mechanical pulp facilities where pulp and paper at groundwood mills are produced through the application of the thermo-mechanical process]

Pollutant or pollutant property	Maximum for any 1 day	
	Kg/kkg (or pounds per 1,000 lb) of product	Milligrams/liter
Pentachlorophenol	0.00097	(0.011)(21.1)/y
Trichlorophenol	0.00088	(0.010)(21.1)/y
Zinc	0.26	(3.0)(21.1)/y
y = wastewater discharged in kgal per ton of product.		

SUBPART G

[BAT effluent limitations for mechanical pulp facilities where the integrated production of pulp and coarse paper, molded pulp products, and newsprint at groundwood mills occurs]

Pollutant or pollutant property	Maximum for any 1 day	
	Kg/kkg (or pounds per 1,000 lb) of product	Milligrams/liter
Pentachlorophenol	0.0011	(0.011)(23.8)/y
Trichlorophenol	0.00099	(0.010)(23.8)/y
Zinc	0.30	(3.0)(23.8)/y
y = wastewater discharged in kgal per ton of product.		

SUBPART G

[BAT effluent limitations for mechanical pulp facilities where the integrated production of pulp and fine paper at groundwood mills occurs

Pollutant or pollutant property	Maximum for any 1 day	
	Kg/kkg (or pounds per 1,000 lb) of product	Milligrams/liter
Pentachlorophenol	0.0010	(0.011)(21.9)/y
Trichlorophenol	0.00092	(0.010)(21.9)/y
Zinc	0.27	(3.0)(21.9)/y
y = wastewater discharged in kgal per ton of product.		

(b) [Reserved]

§ 430.75 New source performance standards (NSPS).

(a) The following applies to mechanical pulp facilities where pulp and paper at groundwood mills are produced through the application of the thermo-mechanical process; mechanical pulp facilities where the integrated

production of pulp and coarse paper, molded pulp products, and newsprint at groundwood mills occurs; and mechanical pulp facilities where the integrated production of pulp and fine paper at groundwood mills occurs: any new source subject to this subpart must achieve the following new source performance standards (NSPS), except that non-continuous dischargers shall not be subject to the maximum day and average of 30 consecutive days effluent limitations for BOD5 and TSS, but shall be subject to annual average effluent limitations. Also, for non-continuous dischargers, concentration limitations (mg/l) shall apply, where provided. Concentration limitations will only apply to non-continuous dischargers. Pentachlorophenol and trichlorophenol limitations are only applicable at facilities where chlorophenolic-containing biocides are used. Permittees not using chlorophenolic-containing biocides must certify to the permit-issuing authority that they are not using these biocides. Zinc limitations are only applicable at facilities where zinc hydrosulfite is used as a bleaching agent. Permittees not using zinc hydrosulfite as a bleaching agent must certify to the permit issuing authority that they are not using this bleaching compound:

SUBPART G

[NSPS for mechanical pulp facilities where pulp and paper at groundwood mills are produced through the application of the thermo-mechanical process]

Pollutant or pollutant property	Kg/kkg (or pounds per 1,000 lb) of product		
	Continuous dischargers		Non-continuous dischargers (annual average)
	Maximum for any 1 day	Average of daily values for 30 consecutive days	
BOD5	4.6	2.5	1.3
TSS	8.7	4.6	2.4
pH	(1)	(1)	(1)

	Maximum for any 1 day	
	Kg/kkg (or pounds per 1,000 lb) of product	Milligrams/liter
Pentachlorophenol	0.00097	(0.017)(13.8)/y
Trichlorophenol	0.00088	(0.015)(13.8)/y
Zinc	0.17	(3.0)(13.8)/y
y = wastewater discharged in kgal per ton at all times.		

[1] Within the range of 5.0 to 9.0 at all times.

SUBPART G

[NSPS for mechanical pulp facilities where the integrated production of pulp and coarse paper, molded pulp products, and newsprint at groundwood mills occurs]

Pollutant or pollutant property	Kg/kkg (or pounds per 1,000 lb) of product		
	Continuous dischargers		Non-continuous dischargers (annual average)
	Maximum for any 1 day	Average of daily values for 30 consecutive days	
BOD5	4.6	2.5	1.3
TSS	7.3	3.8	2.0
pH	(1)	(1)	(1)

	Maximum for any 1 day	
	Kg/kkg (or pounds per 1,000 lb) of product	Milligrams/liter
Pentachlorophenol	0.0011	(0.016)(16.8)/y
Trichlorophenol	0.00099	(0.014)(16.8)/y
Zinc	0.21	(3.0)(16.8)/y
y = wastewater discharged in kgal per ton at all times.		

[1] Within the range of 5.0 to 9.0 at all times.

SUBPART G

[NSPS mechanical pulp facilities where the integrated production of pulp and fine paper at groundwood mills occurs]

Pollutant or pollutant property	Kg/kkg (or pounds per 1,000 lb) of product		
	Continuous dischargers		Non-continuous dischargers (annual average)
	Maximum for any 1 day	Average of daily values for 30 consecutive days	
BOD5	3.5	1.9	0.99
TSS	5.8	3.0	1.58
pH	(1)	(1)	(1)

	Maximum for any 1 day	
	Kg/kkg (or pounds per 1,000 lb) of product	Milligrams/liter
Pentachlorophenol	0.0010	(0.016) (15.4)/y
Trichlorophenol	0.00092	(0.014) (15.4)/y
Zinc	0.19	(3.0) (15.4)/y
y = wastewater discharged in kgal per ton at all times.		

[1] Within the range of 5.0 to 9.0 at all times.

(b) [Reserved]

§ 430.76 Pretreatment standards for existing sources (PSES).

(a) The following applies to mechanical pulp facilities where pulp and paper at groundwood mills are produced through the application of the thermo-mechanical process; mechanical pulp facilities where the integrated production of pulp and coarse paper, molded pulp products, and newsprint at groundwood mills occurs; and mechanical pulp facilities where the integrated production of pulp and fine paper at groundwood mills occurs: except as provided in 40 CFR 403.7 and 403.13, any existing source subject to this subpart that introduces pollutants into a publicly owned treatment works must comply with 40 CFR part 403 and achieve the following pretreatment standards for existing sources (PSES). Pentachlorophenol and trichlorophenol limitations are only applicable at facilities where chlorophenolic-containing biocides are used. Permittees not using chlorophenolic-containing biocides must certify to the permit-issuing authority that they are not using these biocides. Zinc limitations are only applicable at facilities where zinc hydrosulfite is used as a bleaching agent. Permittees not using zinc hydrosulfite as a bleaching agent must certify to the permit-issuing authority that they are not using this bleaching compound. PSES must be attained on or before July 1, 1984:

SUBPART G

[PSES for mechanical pulp facilities where pulp and paper at groundwood mills are produced through the application of the thermo-mechanical process]

Pollutant or pollutant property	Maximum for any 1 day	
	Milligrams/liter (mg/1)	Kg/kkg (or pounds per 1,000 1b) of product [a]
Pentachlorophenol	(0.011) (21.1)/y	0.00097
Trichlorophenol	(0.010) (21.1)/y	0.00088
Zinc	(3.0) (21.1)/y	0.26
y = wastewater discharged in kgal per ton of product.		

[a] The following equivalent mass limitations are provided as guidance in cases when POTWs find it necessary to impose mass effluent limitations.

SUBPART G

[PSES for mechanical pulp facilities where the integrated production of pulp and coarse paper, molded pulp products, and newsprint at groundwood mills occurs]

Pollutant or pollutant property	Maximum for any 1 day	
	Milligrams/liter (mg/1)	Kg/kkg (or pounds per 1,000 1b) of product [a]
Pentachlorophenol	(0.011) (23.8)/y	0.0011
Trichlorophenol	(0.010) (23.8)/y	0.00099
Zinc	(3.0) (23.8)/y	0.30
y = wasterwater discharged in kgal per ton of product.		

[a] The following equivalent mass limitations are provided as guidance in cases when POTWs find it necessary to impose mass effluent limitations.

SUBPART G

[PSNS for mechanical pulp facilities where the integrated production of pulp and fine paper at groundwood mills occurs]

Pollutant or pollutant property	Maximum for any 1 day	
	Milligrams/liter (mg/l)	Kg/kkg (or pounds per 1,000 lb) of product [a]
Pentachlorophenol	(0.011)(21.9)/y	0.0010
Trichlorophenol	(0.010)(21.9)/y	0.00092
Zinc	(3.0)(21.9)/y	0.27
y = wastewater discharged in kgal per ton of product.		

[a] The following equivalent mass limitations are provided as guidance in cases when POTWs find it necessary to impose mass effluent limitations.

(b) [Reserved]

§ 430.77 Pretreatment standards for new sources (PSNS).

(a) The following applies to mechanical pulp facilities where pulp and paper at groundwood mills are produced through the application of the thermo-mechanical process; mechanical pulp facilities where the integrated production of pulp and coarse paper, molded pulp products, and newsprint at groundwood mills occurs; and mechanical pulp facilities where the integrated production of pulp and fine paper at groundwood mills occurs: except as provided in 40 CFR 403.7, any new source subject to this subpart that introduces pollutants into a publicly owned treatment works must comply with 40 CFR part 403 and achieve the following pretreatment standards for new sources (PSNS). Pentachlorophenol and trichlorophenol limitations are only applicable at facilities where chlorophenolic-containing biocides are used. Permittees not using chlorophenolic-containing biocides must certify to the permit-issuing authority that they are not using these biocides. Zinc limitations are only applicable at facilities where zinc hydrosulfite is used as a bleaching agent. Permittees not using zinc hydrosulfite as a bleaching agent must certify to the permit issuing authority that they are not using this bleaching compound:

SUBPART G

[PSNS for mechanical pulp facilities where pulp and paper at groundwood mills are produced through the application of the thermo-mechanical process]

Pollutant or pollutant property	Maximum for any 1 day	
	Milligrams/liter (mg/l)	Kg/kkg (or pounds per 1,000 lb) of product [a]
Pentachlorophenol	(0.017)(13.8)/y	0.00097
Trichlorophenol	(0.015)(13.8)/y	0.00088
Zinc	(3.0)(13.8)/y	0.17
y = wastewater discharged in kgal per ton of product.		

[a] The following equivalent mass limitations are provided as guidance in cases when POTWs find it necessary to impose mass effluent limitations.

SUBPART G

[PSNS for mechanical pulp facilities where the integrated production of pulp and coarse paper, molded pulp products, and newsprint at groundwood mills occurs]

Pollutant or pollutant property	Maximum for any 1 day	
	Milligrams/liter (mg/l)	Kg/kkg (or pounds per 1,000 lb) of product[a]
Pentachlorophenol	(0.016)(16.8)/y	0.0011
Trichlorophenol	(0.014)(16.8)/y	0.00099
Zinc	(3.0)(16.8)/y	0.21
y = wastewater discharged in kgal per ton of product.		

[a] The following equivalent mass limitations are provided as guidance in cases when POTWs find it necessary to impose mass effluent limitations.

SUBPART G

[PSNS for mechanical pulp facilities where the integrated production of pulp and fine paper at groundwood mills occurs]

Pollutant or pollutant property	Maximum for any 1 day	
	Milligrams/liter (mg/l)	Kg/kkg (or pounds per 1,000 lb) of product[a]
Pentachlorophenol	(0.016)(15.4)/y	0.0010
Trichlorophenol	(0.014)(15.4)/y	0.00092
Zinc	(3.0)(15.4)/y	0.19
y = wastewater discharged in kgal per ton of product.		

[a] The following equivalent mass limitations are provided as guidance in cases when POTWs find it necessary to impose mass effluent limitations.

(b) [Reserved]

Subpart H—Non-Wood Chemical Pulp Subcategory

§ 430.80 Applicability; description of the non-wood chemical pulp subcategory.

The provisions of this subpart are applicable to discharges resulting from the production of pulp and paper at non-wood chemical pulp mills. This subcategory includes, but is not limited to, mills producing non-wood pulps from chemical pulping processes such as kraft, sulfite, or soda.

§ 430.81 Specialized definitions.

The general definitions, abbreviations, and methods of analysis set forth in 40 CFR 401 and § 430.01 of this part shall apply to this subpart.

§ 430.82 Effluent limitations representing the degree of effluent reduction attainable by the application of best practicable control technology currently available (BPT). [Reserved]

§ 430.83 Effluent limitations representing the degree of effluent reduction attainable by the application of best conventional pollutant control technology (BCT). [Reserved]

§ 430.84 Effluent limitations representing the degree of effluent reduction attainable by the application of best available technology economically achievable (BAT). [Reserved]

§ 430.85 New source performance standards (NSPS). [Reserved]

§ 430.86 Pretreatment standards for existing sources (PSES). [Reserved]

§ 430.87 Pretreatment standards for new sources (PSNS). [Reserved]

Subpart I—Secondary Fiber Deink Subcategory

§ 430.90 Applicability; description of the secondary fiber deink subcategory.

The provisions of this subpart are applicable to discharges resulting from the integrated production of pulp and paper at deink mills.

§ 430.91 Specialized definitions.

For the purpose of this subpart, the general definitions, abbreviations, and methods of analysis set forth in 40 CFR part 401 and § 430.01 of this part shall apply to this subpart.

§ 430.92 Effluent limitations representing the degree of effluent reduction attainable by the application of the best practicable control technology currently available (BPT).

Except as provided in 40 CFR 125.30 through 125.32, any existing point source subject to this subpart must achieve the following effluent limitations representing the degree of effluent reduction attainable by the application of the best practicable control technology currently available (BPT), except that non-continuous dischargers shall not be subject to the maximum day and average of 30 consecutive days limitations but shall be subject to annual average effluent limitations:

SUBPART I

[BPT effluent limitations]

Pollutant or pollutant property	Kg/kkg (or pounds per 1,000 lb) of product		
	Continuous dischargers		Non-continuous dischargers (annual average)
	Maximum for any 1 day	Average of daily values for 30 consecutive days	
BOD5	18.1	9.4	5.3
TSS	24.05	12.95	7.12
pH	(1)	(1)	(1)

1 Within the range of 5.0 to 9.0 at all times.

§ 430.93 Effluent limitations guidelines representing the degree of effluent reduction attainable by the application of the best conventional pollutant control technology (BCT).

Except as provided in 40 CFR 125.30 through 125.32, any existing point source subject to this subpart shall achieve the following effluent limitations representing the degree of effluent reduction attainable by the application of the best conventional pollutant control technology (BCT): The limitations shall be the same as those specified for conventional pollutants (which are defined in 40 CFR 401.16) in § 430.92 of this subpart for the best practicable control technology currently available (BPT).

§ 430.94 Effluent limitations representing the degree of effluent reduction attainable by the application of the best available technology economically achievable (BAT).

Except as provided in 40 CFR 125.30 through 125.32, any existing point source subject to this subpart where chlorophenolic-containing biocides are used must achieve the following effluent limitations representing the degree of effluent reduction attainable by the application of the best available technology economically achievable (BAT). Non-continuous dischargers shall not be subject to the maximum day mass limitations in kg/kkg (lb/1000 lb) but shall be subject to concentration limitations. Concentration limitations are only applicable to non-continuous dischargers. Permittees not using chlorophenolic-containing biocides must certify to the permit-issuing authority that they are not using these biocides:

SUBPART I

[Facilities where fine or tissue paper is produced]

Pollutant or pollutant property	BAT effluent limitations	
	Maximum for any 1 day	
	Kg/kkg (or pounds per 1,000 lb) of product	Milligrams/liter
Pentachlorophenol	0.0030	(0.029)(24.4)/y
Trichlorophenol	0.0069	(0.068)(24.4)/y
y = wastewater discharged in kgal per ton of product.		

SUBPART I

[Facilities where newsprint is produced]

Pollutant or pollutant property	BAT effluent limitations	
	Maximum for any 1 day	
	Kg/kkg (or pounds per 1,000 lb) of product	Milligrams/liter
Pentachlorophenol	0.0030	(0.029)(24.4)/y
Trichlorophenol	0.0010	(0.010)(24.4)/y
y = wastewater discharged in kgal per ton of product.		

§ 430.95 New source performance standards (NSPS).

Any new source subject to this subpart must achieve the following new source performance standards (NSPS), except that non-continuous dischargers shall not be subject to the maximum day and average of 30 consecutive days effluent limitations for BOD5 and TSS, but shall be subject to annual average effluent limitations. Also, for non-continuous dischargers, concentration

limitations (mg/l) shall apply, where provided. Concentration limitations will only apply to non-continuous dischargers. Only facilities where chlorophenolic-containing biocides are used shall be subject to pentachlorophenol and trichlorophenol limitations. Permittees not using chlorophenolic-containing biocides must certify to the permit-issuing authority that they are not using these biocides:

SUBPART I

[Facilities where fine paper is produced]

[NSPS]

Pollutant or pollutant property	Kg/kkg (or pounds per 1,000 lb) of product		
	Continuous dischargers		Non-continuous dischargers (annual average)
	Maximum for any 1 day	Average of daily values for 30 consecutive days	
BOD5	5.7	3.1	1.6
TSS	8.7	4.6	2.4
pH	(1)	(1)	(1)

	Maximum for any 1 day	
	Kg/kkg (or pounds per 1,000 lb) of product	Milligrams/liter
Pentachlorophenol	0.0030	(0.045)(15.9)/y
Trichlorophenol	0.0069	(0.104)(15.9)/y
y = wastewater discharged in kgal per ton at all times.		

[1] Within the range of 5.0 to 9.0 at all times.

SUBPART I

[Facilities where tissue paper is produced]

[NSPS]

Pollutant or pollutant property	Kg/kkg (or pounds per 1,000 lb) of product		
	Continuous dischargers		Non-continuous dischargers (annual average)
	Maximum for any 1 day	Average of daily values for 30 consecutive days	
BOD5	9.6	5.2	2.72
TSS	13.1	6.8	3.58
pH	(1)	(1)	(1)

	Maximum for any 1 day	
	Kg/kkg (or pounds per 1,000 lb) of product	Milligrams/liter
Pentachlorophenol	0.0030	(0.036)(19.5)/y
Trichlorophenol	0.0069	(0.085)(19.5)/y
y = wastewater discharged in kgal per ton at all times.		

[1] Within the range of 5.0 to 9.0 at all times.

SUBPART I

[Facilities where newsprint is produced]

[NSPS]

Pollutant or pollutant property	Kg/kkg (or pounds per 1,000 lb) of product		
	Continuous dischargers		Non-continuous dischargers (annual average)
	Maximum for any 1 day	Average of daily values for 30 consecutive days	
BOD5	6.0	3.2	1.7
TSS	12.0	6.3	3.3
pH	(1)	(1)	(1)

	Maximum for any 1 day	
	Kg/kkg (or pounds per 1,000 lb) of product	Milligrams/liter
Pentachlorophenol	0.0030	(0.044)(16.2)/y
Trichlorophenol	0.0010	(0.015)(16.2)/y
y = wastewater discharged in kgal per ton at all times.		

[1] Within the range of 5.0 to 9.0 at all times.

§ 430.96 Pretreatment standards for existing sources (PSES).

(a) Except as provided in 40 CFR 403.7 and 403.13, any existing source subject to this subpart that introduces pollutants into a publicly owned treatment works must comply with 40 CFR part 403 and achieve the following pretreatment standards for existing sources (PSES) if it uses chlorophenolic-containing biocides. Permittees not using chlorophenolic-containing biocides must certify to the permit-issuing authority that they are not using these biocides. PSES must be attained on or before July 1, 1984:

SUBPART I

[Facilities where fine or tissue paper is produced]

Pollutant or pollutant property	PSES	
	Maximum for any 1 day	
	Milligrams/liter (mg/l)	Kg/kkg (or pounds per 1,000 lb) of product [a]
Pentachlorophenol	(0.032)(24.4)/y	0.0033
Trichlorophenol	(0.082)(24.4)/y	0.0084
y = wastewater discharged in kgal per ton of product.		

[a] The following equivalent mass limitations are provided as guidance in cases when POTWs find it necessary to impose mass equivalent limitations.

SUBPART I

[Facilities where newsprint is produced]

Pollutant or pollutant property	PSES	
	Maximum for any 1 day	
	Milligrams/liter (mg/l)	Kg/kkg (or pounds per 1,000 lb) of product [a]
Pentachlorophenol	(0.032)(24.4)/y	0.0033
Trichlorophenol	(0.010)(24.4)/y	0.0010
y = wastewater discharged in kgal per ton of product.		

[a] The following equivalent mass limitations are provided as guidance in cases when POTWs find it necessary to impose mass equivalent limitations.

§ 430.97 Pretreatment standards for new sources (PSNS).

(a) Except as provided in 40 CFR 403.7, any new source subject to this subpart that introduces pollutants into a publicly owned treatment works must comply with 40 CFR part 403 and achieve the following pretreatment standards for new sources (PSNS) if it uses chlorophenolic-containing biocides. Permittees not using chlorophenolic-containing biocides must certify to the permit-issuing authority that they are not using these biocides:

SUBPART I

[Facilities where fine paper is produced]

Pollutant or pollutant property	PSNS	
	Maximum for any 1 day	
	Milligrams/liter (mg/l)	Kg/kkg (or pounds per 1,000 lb) of product [a]
Pentachlorophenol	(0.049)(15.9)/y	0.0033
Trichlorophenol	(0.126)(15.9)/y	0.0084
y = wastewater discharged in kgal per ton of product.		

[a] The following equivalent mass limitations are provided as guidance in cases when POTWs find it necessary to impose mass equivalent limitations.

SUBPART I

[Facilities where tissue paper is produced]

Pollutant or pollutant property	PSNS	
	Maximum for any 1 day	
	Milligrams/liter (mg/l)	Kg/kkg (or pounds per 1,000 lb) of product [a]
Pentachlorophenol	(0.040)(19.5)/y	0.0033
Trichlorophenol	(0.103)(19.5)/y	0.0084
y = wastewater discharged in kgal per ton of product.		

[a] The following equivalent mass limitations are provided as guidance in cases when POTWs find it necessary to impose mass equivalent limitations.

SUBPART I

[Facilities where newsprint is produced]

Pollutant or pollutant property	PSNS	
	Maximum for any 1 day	
	Milligrams/liter (mg/l)	Kg/kkg (or pounds per 1,000 lb) of product [a]
Pentachlorophenol	(0.048)(16.2)/y	0.0033
Trichlorophenol	(0.015)(16.2)/y	0.0010
y = wastewater discharged in kgal per ton of product.		

[a] The following equivalent mass limitations are provided as guidance in cases when POTWs find it necessary to impose mass equivalent limitations.

Subpart J—Secondary Fiber Non-Deink Subcategory

§ 430.100 Applicability; description of the secondary fiber non-deink subcategory.

The provisions of this subpart are applicable to discharges resulting from the production of: paperboard from wastepaper; tissue paper from wastepaper without deinking at secondary fiber mills; molded products from wastepaper without deinking at secondary fiber mills; and builders' paper and roofing felt from wastepaper.

§ 430.101 Specialized definitions.

For the purpose of this subpart:

(a) Except as provided below, the general definitions, abbreviations, and methods of analysis set forth in 40 CFR part 401 and § 430.01 of this part shall apply to this subpart.

(b) Noncorrugating medium furnish subdivision mills are mills where recycled corrugating medium is not used in the production of paperboard.

(c) Corrugating medium furnish subdivision mills are mills where only recycled corrugating medium is used in the production of paperboard.

§ 430.102 Effluent limitations representing the degree of effluent reduction attainable by the application of the best practicable control technology currently available (BPT).

(a) Except as provided in 40 CFR 125.30 through 125.32, any existing point source subject to this subpart must achieve the following effluent limitations representing the degree of effluent reduction attainable by the application of the best practicable control technology currently available (BPT):

SUBPART J

[BPT effluent limitations for secondary fiber non-deink facilities where paperboard from wastepaper is produced—noncorrugating medium finish subdivision]

Pollutant or pollutant property	Kg/kkg (or pounds per 1,000 lb) of product	
	Maximum for any 1 day	Average of daily values for 30 consecutive days
BOD5	3.0	1.5
TSS	5.0	2.5
pH	(1)	(1)

1 1Within the range of 6.0 to 9.0 at all times.

SUBPART J

[BPT effluent limitations for secondary fiber non-deink facilities where paperboard from wastepaper is produced—corrugating medium finish subdivision]

Pollutant or pollutant property	Kg/kkg (or pounds per 1,000 lb) of product	
	Maximum for any 1 day	Average of daily values for 30 consecutive days
BOD5	5.7	2.8
TSS	9.2	4.6
pH	(1)	(1)

1 Within the range of 6.0 to 9.0 at all times.

SUBPART J

[BPT effluent limitations for secondary fiber non-deink facilities where builders' paper and roofing felt from wastepaper are produced]

Pollutant or pollutant property	Kg/kkg (or pounds per 1,000 lb) of product	
	Maximum for any 1 day	Average of daily values for 30 consecutive days
BOD5	5.0	3.0
TSS	5.0	3.0
pH	(1)	(1)
Setteable Solids	(2)	(2)

1 Within the range of 6.0 to 9.0 at all times.
2 Not to exceed 0.2 ml/l.

(b) Except as provided in 40 CFR 125.30 through 125.32, any existing point source subject to this subpart must achieve the following effluent limitations representing the degree of effluent reduction attainable by the application of the best practicable control technology currently available (BPT), except that non-continuous dischargers shall not be subject to the maximum day and average of 30 consecutive days limitations but shall be subject to annual average effluent limitations:

SUBPART J

[BPT effluent limitations for secondary fiber non-deink facilities where tissue from wastepaper is produced without deinking]

Pollutant or pollutant property	Kg/kkg (or pounds per 1,000 lb) of product		
	Continuous dischargers		Non-continuous dischargers (annual average days)
	Maximum for any 1 day	Average of daily values for 30 consecutive days	
BOD5	13.7	7.1	4.0
TSS	17.05	9.2	5.1
pH	(1)	(1)	(1)

1 Within the range of 5.0 to 9.0 at all times.

SUBPART J

[BPT effluent limitations for secondary fiber non-deink facilities where molded products from wastepaper are produced without deinking]

Pollutant or pollutant property	Kg/kkg (or pounds per 1,000 lb) of product		
	Continuous dischargers		Non-continuous dischargers (annual average days)
	Maximum for any 1 day	Average of daily values for 30 consecutive days	
BOD5	4.4	2.3	1.3
TSS	10.8	5.8	3.2
pH	(1)	(1)	(1)

1 Within the range of 5.0 to 9.0 at all times.

§ 430.103 Effluent limitations guidelines representing the degree of effluent reduction attainable by the application of the best conventional pollutant control technology (BCT).

(a) Except as provided in 40 CFR 125.30 through 125.32, any existing point source subject to this subpart shall achieve the following effluent limitations representing the degree of effluent reduction attainable by the application of the best conventional pollutant control technology (BCT): The limitations shall be the same as those specified for conventional pollutants (which are defined in 40 CFR 401.16) in § 430.102 of this subpart for the best practicable control technology currently available (BPT).

(b) For secondary fiber non-deink facilities where paperboard from wastepaper is produced, non-continuous dischargers shall not be subject to the maximum day and average-of-30-consecutive-days limitations, but shall be subject to annual average effluent limitations determined by dividing the average-of-30-consecutive-days limitations for BOD5 and TSS by 1.77 and 2.18.

(c) For secondary fiber non-deink facilities where builders' paper and roofing felt from wastepaper are produced, non-continuous dischargers shall not be subject to the maximum day and average-of-30-consecutive-days limitations, but shall be subject to annual average effluent limitations determined by dividing the average-of-30-consecutive-days limitations for BOD5 and TSS by 1.90 and 1.90.

§ 430.104 Effluent limitations representing the degree of effluent reduction attainable by the application of the best available technology economically achievable (BAT).

Except as provided in 40 CFR 125.30 through 125.32, any existing point source subject to this subpart where chlorophenolic-containing biocides are used must achieve the following effluent limitations representing the degree of effluent reduction attainable by the application of the best available technology economically achievable (BAT). Non-continuous dischargers shall not be subject to the maximum day mass limitations in kg/kkg (lb/1000 lb) but shall be subject to concentration limitations. Concentration limitations are only applicable to non-continuous dischargers. Permittees not using chlorophenolic-containing biocides must certify to the permit-issuing authority that they are not using these biocides:

SUBPART J

[BAT effluent limitations for secondary fiber non-deink facilities where paperboard from wastepaper is produced]

Pollutant or pollutant property	Maximum for any 1 day	
	Kg/kkg (or pounds per 1,000 lb) of product	Milligrams/liter
Pentachlorophenol	0.00087	(0.029)(7.2)/y
Trichlorophenol	0.00030	(0.010)(7.2)/y
y = wastewater discharged in kgal per ton of product.		

SUBPART J

[BAT effluent limitations for secondary fiber non-deink facilities where builders' paper and roofing felt from wastepaper are produced]

Pollutant or pollutant property	Maximum for any 1 day	
	Kg/kkg (or pounds per 1,000 lb) of product	Milligrams/liter
Pentachlorophenol	0.0017	(0.029)(14.4)/y
Trichlorophenol	0.00060	(0.010)(14.4)/y
y = wastewater discharged in kgal per ton of product.		

SUBPART J

[BAT effluent limitations for secondary fiber non-deink facilities where tissue from wastepaper is produced without deinking]

Pollutant or pollutant property	Maximum for any 1 day	
	Kg/kkg (or pounds per 1,000 lb) of product	Milligrams/liter
Pentachlorophenol	0.0030	(0.029)(25.2)/y
Trichlorophenol	0.0011	(0.010)(25.2)/y
y = wastewater discharged in kgal per ton of product.		

SUBPART J

[BAT effluent limitations for secondary fiber non-deink facilities where molded products from wastepaper are produced without deinking]

Pollutant or pollutant property	Maximum for any 1 day	
	Kg/kkg (or pounds per 1,000 lb) of product	Milligrams/liter
Pentachlorophenol	0.0026	(0.029)(21.1)/y
Trichlorophenol	0.00088	(0.010)(21.1)/y
y = wastewater discharged in kgal per ton of product.		

§ 430.105 New source performance standards (NSPS).

Any new source subject to this subpart must achieve the following new source performance standards (NSPS), except that non-continuous dischargers shall not be subject to the maximum day and average of 30 consecutive days effluent limitations for BOD5 and TSS, but shall be subject to annual average effluent limitations. Also, for non-continuous dischargers, concentration limitations (mg/l) shall apply, where provided. Concentration limitations will only apply to non-continuous dischargers. Only facilities where chlorophenolic-containing biocides are used shall be subject to pentachlorophenol and trichlorophenol limitations. Permittees not using chlorophenolic-containing biocides must certify to the permit-issuing authority that they are not using these biocides:

SUBPART J

[NSPS for secondary fiber non-deink facilities where paperboard from wastepaper is produced—noncorrugating medium furnish subdivision]

Pollutant or pollutant property	Kg/kkg (or pounds per 1,000 lb) of product		
	Continuous dischargers		Non-continuous dischargers (annual average)
	Maximum for any 1 day	Average of daily values for 30 consecutive days	
BOD5	2.6	1.4	0.73
TSS	3.5	1.8	0.95
pH	(1)	(1)	(1)

	Maximum for any 1 day	
	Kg/kkg (or pounds per 1,000 lb) of product	Milligrams/liter
Pentachlorophenol	0.00087	(0.065)(3.2)/y
Trichlorophenol	0.00030	(0.023)(3.2)/y
y = wastewater discharged in kgal per ton at all times.		

[1] Within the range of 5.0 to 9.0 at all times.

SUBPART J

[NSPS for secondary fiber non-deink facilities where paperboard from wastepaper is produced—corrugating medium finish subdivision]

Pollutant or pollutant property	Kg/kkg (or pounds per 1,000 lb) of product		
	Continuous dischargers		Non-continuous dischargers (annual average)
	Maximum for any 1 day	Average of daily values for 30 consecutive days	
BOD5	3.9	2.1	1.1
TSS	4.4	2.3	1.2
pH	(1)	(1)	(1)

	Maximum for any 1 day	
	Kg/kkg (or pounds per 1,000 lb) of product	Milligrams/liter
Pentachlorophenol	0.00087	(0.065)(3.2)/y
Trichlorophenol	0.00030	(0.023)(3.2)/y
y = wastewater discharged in kgal per ton at all times.		

[1] Within the range of 5.0 to 9.0 at all times.

SUBPART J

[NSPS for secondary fiber non-deink facilities where builders' paper and roofing felt from wastepaper are produced]

Pollutant or pollutant property	Kg/kkg (or pounds per 1,000 lb) of product		
	Continuous dischargers		Non-continuous dischargers (annual average)
	Maximum for any 1 day	Average of daily values for 30 consecutive days	
BOD5	1.7	0.94	0.49
TSS	2.7	1.40	0.74

SUBPART J—Continued

[NSPS for secondary fiber non-deink facilities where builders' paper and roofing felt from wastepaper are produced]

Pollutant or pollutant property	Kg/kkg (or pounds per 1,000 lb) of product		
	Continuous dischargers		Non-continuous dischargers (annual average)
	Maximum for any 1 day	Average of daily values for 30 consecutive days	
pH	(1)	(1)	(1)

	Maximum for any 1 day	
	Kg/kkg (or pounds per 1,000 lb) of product	Milligrams/liter
Pentachlorophenol	0.0017	(0.155)(2.7)/y
Trichlorophenol	0.00060	(0.053)(2.7)/y
y = wastewater discharged in kgal per ton at all times.		

[1] Within the range of 5.0 to 9.0 at all times.

SUBPART J

[NSPS for secondary fiber non-deink facilities where tissue from wastepaper is produced without deinking]

Pollutant or pollutant property	Kg/kkg (or pounds per 1,000 lb) of product		
	Continuous dischargers		Non-continuous dischargers (annual average)
	Maximum for any 1 day	Average of daily values for 30 consecutive days	
BOD5	4.6	2.5	1.3
TSS	10.2	5.3	2.8
pH	(1)	(1)	(1)

	Maximum for any 1 day	
	Kg/kkg (or pounds per 1,000 lb) of product	Milligrams/liter
Pentachlorophenol	0.0030	(0.045)(16.3)/y
Trichlorophenol	0.0011	(0.015)(16.3)/y
y = wastewater discharged in kgal per ton at all times.		

[1] Within the range of 5.0 to 9.0 at all times.

SUBPART J

[NSPS for secondary fiber non-deink facilities where molded products from wastepaper are produced without deinking]

Pollutant or pollutant property	Kg/kkg (or pounds per 1,000 lb) of product		
	Continuous dischargers		Non-continuous dischargers (annual average)
	Maximum for any 1 day	Average of daily values for 30 consecutive days	
BOD5	2.1	1.1	0.58
TSS	4.4	2.3	1.21
pH	(1)	(1)	(1)

	Maximum for any 1 day	
	Kg/kkg (or pounds per 1,000 lb) of product	Milligrams/liter
Pentachlorophenol	0.0026	(0.107)(5.7)/y
Trichlorophenol	0.00088	(0.037)(5.7)/y
y = wastewater discharged in kgal per ton at all times.		

[1] Within the range of 5.0 to 9.0 at all times.

§ 430.106 Pretreatment standards for existing sources (PSES).

Except as provided in 40 CFR 403.7 and 403.13, any existing source subject to this subpart that introduces pollutants into a publicly owned treatment works must: comply with 40 CFR part 403; and achieve the following pretreatment standards for existing sources (PSES) if it uses chlorophenolic-containing biocides. Permittees not using chlorophenolic-containing biocides must certify to the permit-issuing authority that they are not using these biocides. PSES must be attained on or before July 1, 1984:

SUBPART J

[PSES for secondary fiber non-deink facilities where paperboard from wastepaper is produced]

Pollutant or pollutant property	Maximum for any 1 day	
	Milligrams/liter (mg/l)	Kg/kkg (or pounds per 1,000 lb) of product[a]
Pentachlorophenol	(0.032)(7.2)/y	0.00096
Trichlorophenol	(0.010)(7.2)/y	0.00030
y = wastewater discharged in kgal per ton of product.		

[a] The following equivalent mass limitations are provided as guidance in cases when POTWs find it necessary to impose mass effluent limitations.

SUBPART J

[PSES for secondary fiber non-deink facilities where builders' paper and roofing felt from wastepaper are produced]

Pollutant or pollutant property	Maximum for any 1 day	
	Milligrams/liter (mg/l)	Kg/kkg (or pounds per 1,000 lb) of product[a]
Pentachlorophenol	(0.032)(14.4)y	0.0019
Trichlorophenol	(0.010)(14.4)y	0.00060
y = wastewater discharged in kgal per ton of product.		

[a] The following equivalent mass limitations are provided as guidance in cases when POTWs find it necessary to impose mass effluent limitations.

SUBPART J

[PSES for secondary fiber non-deink facilities where tissue from wastepaper is produced without deinking]

Pollutant or pollutant property	Maximum for any 1 day	
	Milligrams/liter (mg/l)	Kg/kkg (or pounds per 1,000 lb) of product[a]
Pentachlorophenol	(0.032)(25.2)y	0.0034
Trichlorophenol	(0.010)(25.2)/y	0.0011
y = wastewater discharged in kgal per ton of product.		

[a] The following equivalent mass limitations are provided as guidance in cases when POTWs find it necessary to impose mass effluent limitations.

SUBPART J

[PSES for secondary fiber non-deink facilities where molded products from wastepaper are produced without deinking]

Pollutant or pollutant property	Maximum for any 1 day	
	Milligrams/liter (mg/l)	Kg/kkg (or pounds per 1,000 lb) of product [a]
Pentachlorophenol	(0.032)(21.1)y	0.0028
Trichlorophenol	(0.010)(21.1)y	0.00088
y = wastewater discharged in kgal per ton of product.		

[a] The following equivalent mass limitations are provided as guidance in cases when POTWs find it necessary to impose mass effluent limitations.

§ 430.107 Pretreatment standards for new sources (PSNS).

Except as provided in 40 CFR 403.7, any new source subject to this subpart that introduces pollutants into a publicly owned treatment works must: comply with 40 CFR part 403; and achieve the following pretreatment standards for new sources (PSNS) if it uses chlorophenolic-containing biocides. Permittees not using chlorophenolic-containing biocides must certify to the permit-issuing authority that they are not using these biocides:

SUBPART J

[PSNS for secondary fiber non-deink facilities where paperboard from wastepaper is produced]

Pollutant or pollutant property	Maximum for any 1 day	
	Milligrams/liter (mg/l)	Kg/kkg (or pounds per 1,000 lb) of product [a]
Pentachlorophenol	(0.072)(3.2)/y	0.00096
Trichlorophenol	(0.023)(3.2)/y	0.00030
y = wastewater discharged in kgal per ton of product.		

[a] The following equivalent mass limitations are provided as guidance in cases when POTWs find it necessary to impose mass effluent limitations.

SUBPART J

[PSNS for secondary fiber non-deink facilities where builders' paper and roofing felt from wastepaper are produced]

Pollutant or pollutant property	Maximum for any 1 day	
	Milligrams/liter (mg/l)	Kg/kkg (or pounds per 1,000 lb) of product [a]
Pentachlorophenol	(0.171)(2.7)/y	0.0019
Trichlorophenol	(0.053)(2.7)/y	0.00060
y = wastewater discharged in kgal per ton of product.		

[a] The following equivalent mass limitations are provided as guidance in cases when POTWs find it necessary to impose mass effluent limitations.

SUBPART J

[PSNS for secondary fiber non-deink facilities where tissue from wastepaper is produced without deinking]

Pollutant or pollutant property	Maximum for any 1 day	
	Milligrams/liter (mg/l)	Kg/kkg (or pounds per 1,000 lb) of product [a]
Pentachlorophenol	(0.049)(16.3)/y	0.0034
Trichlorophenol	(0.015)(16.3)/y	0.0011
y = wastewater discharged in kgal per ton of product.		

[a] The following equivalent mass limitations are provided as guidance in cases when POTWs find it necessary to impose mass effluent limitations.

SUBPART J

[PSNS for secondary fiber non-deink facilities where molded products from wastepaper are produced without deinking]

Pollutant or pollutant property	Maximum for any 1 day	
	Milligrams/liter (mg/l)	Kg/kkg (or pounds per 1,000 lb) of product [a]
Pentachlorophenol	(0.118)(5.7)/y	0.0028
Trichlorophenol	(0.037)(5.7)/y	0.00088
y = wastewater discharged in kgal per ton of product.		

[a] The following equivalent mass limitations are provided as guidance in cases when POTWs find it necessary to impose mass effluent limitations.

Subpart K—Fine and Lightweight Papers from Purchased Pulp Subcategory

§ 430.110 Applicability; description of the fine and lightweight papers from purchased pulp subcategory.

The provisions of this subpart are applicable to discharges resulting from the production of: fine paper at nonintegrated mills; and lightweight paper at nonintegrated mills.

§ 430.111 Specialized definitions.

For the purpose of this subpart:

(a) Except as provided in paragraphs (b) and (c) of this section, the general definitions, abbreviations, and methods of analysis set forth in 40 CFR part 401 and § 430.01 of this part shall apply to this subpart.

(b) Cotton fiber furnish subdivision mills are those mills where significant quantities of cotton fibers (equal to or greater than 4 percent of the total product) are used in the production of fine papers.

(c) Wood fiber furnish subdivision mills are those mills where cotton fibers are not used in the production of fine papers.

§ 430.112 Effluent limitations representing the degree of effluent reduction attainable by the application of the best practicable control technology currently available (BPT).

Except as provided in 40 CFR 125.30 through 125.32, any existing point source subject to this subpart must achieve the following effluent limitations representing the degree of effluent reduction attainable by the application of the best practicable control technology currently available (BPT), except that non-continuous dischargers shall not be subject to the maximum day and average of 30 consecutive days limitations but shall be subject to annual average effluent limitations:

SUBPART K

[BPT effluent limitations for non-integrated mills where fine paper is produced from purchased pulp—wood fiber furnish subdivision]

Pollutant or pollutant property	Kg/kkg (or pounds per 1,000 lb) of product		
	Continuous dischargers		Non-continuous dischargers (annual average)
	Maximum for any 1 day	Average of daily values for 30 consecutive days	
BOD5	8.2	4.25	2.4
TSS	11.0	5.9	3.2
pH	(1)	(1)	(1)

[1] Within the range of 5.0 to 9.0 at all times.

SUBPART K

[BPT effluent limitations for non-integrated mills where fine paper is produced from purchased pulp—cotton fiber furnish subdivision]

Pollutant or pollutant property	Kg/kkg (or pounds per 1,000 lb) of product		
	Continuous dischargers		Non-continuous dischargers (annual average)
	Maximum for any 1 day	Average of daily values for 30 consecutive days	
BOD5	17.4	9.1	5.1
TSS	24.3	13.1	7.2

SUBPART K—Continued

[BPT effluent limitations for non-integrated mills where fine paper is produced from purchased pulp—cotton fiber furnish subdivision]

Pollutant or pollutant property	Kg/kkg (or pounds per 1,000 lb) of product		
	Continuous dischargers		Non-continuous dischargers (annual average)
	Maximum for any 1 day	Average of daily values for 30 consecutive days	
pH	(1)	(1)	(1)

1 Within the range of 5.0 to 9.0 at all times.

SUBPART K

[BPT effluent limitations for non-integrated mills where lightweight papers are produced from purchased pulp]

Pollutant or pollutant property	Kg/kkg (or pounds per 1,000 lb) of product		
	Continuous dischargers		Non-continuous dischargers (annual average)
	Maximum for any 1 day	Average of daily values for 30 consecutive days	
BOD5	24.1	13.2	7.37
TSS	21.6	10.6	6.0
pH	(1)	(1)	(1)

1 Within the range of 5.0 to 9.0 at all times.

SUBPART K

[BPT effluent limitations for non-integrated mills where lightweight papers are produced from purchased pulp— electrical grade papers subdivision

Pollutant or pollutant property	Kg/kkg (or pounds per 1,000 lb) of product		
	Continuous dischargers		Non-continuous dischargers (annual average)
	Maximum for any 1 day	Average of daily values for 30 consecutive days	
BOD5	38.0	20.9	11.7
TSS	34.2	16.7	9.5
pH	(1)	(1)	(1)

1 Within the range of 5.0 to 9.0 at all times.

§ 430.113 Effluent limitations guidelines representing the degree of effluent reduction attainable by the application of the best conventional pollutant control technology (BCT).

Except as provided in 40 CFR 125.30 through 125.32, any existing point source subject to this subpart shall achieve the following effluent limitations representing the degree of effluent reduction attainable by the application of the best conventional pollutant control technology (BCT): The limitations shall be the same as those specified for conventional pollutants (which are defined in 40 CFR 401.16) in § 430.102 of this subpart for the best practicable control technology currently available (BPT).

§ 430.114 Effluent limitations representing the degree of effluent reduction attainable by the application of the best available technology economically achievable (BAT).

Except as provided in 40 CFR 125.30 through 125.32, any existing point source subject to this subpart where chlorophenolic-containing biocides are used must achieve the following effluent limitations representing the degree of effluent reduction attainable by the application of the best available technology economically achievable (BAT). Non-continuous dischargers shall not be subject to the maximum day mass limitations in kg/kkg (lb/1000 lb) but shall be subject to concentration limitations. Concentration limitations are only applicable to non-continuous dischargers. Permittees not using chlorophenolic-containing biocides must certify to the permit-issuing authority that they are not using these biocides:

SUBPART K

[BAT effluent limitations for non-integrated mills where fine paper is produced from purchased pulp—wood fiber furnish subdivision]

Pollutant or pollutant property	Maximum for any 1 day	
	Kg/kkg (or pounds per 1,000 lb) of product	Milligrams/liter
Pentachlorophenol	0.0018	(0.029)(15.2)/y
Trichlorophenol	0.00064	(0.010)(15.2)/y
y = wastewater discharged in kgal per ton of product.		

SUBPART K

[BAT effluent limitations for non-integrated mills where fine paper is produced from purchased pulp—cotton fiber furnish subdivision]

Pollutant or pollutant property	Maximum for any 1 day	
	Kg/kkg (or pounds per 1,000 lb) of product	Milligrams/liter
Pentachlorophenol	0.0051	(0.029)(42.3)/y
Trichlorophenol	0.0018	(0.010)(42.3)/y
y = wastewater discharged in kgal per ton of product.		

SUBPART K

[BAT effluent limitations for non-integrated mills where lightweight papers are produced from purchased pulp]

Pollutant or pollutant property	Maximum for any 1 day	
	Kg/kkg (or pounds per 1,000 lb) of product	Milligrams/liter
Pentachlorophenol	0.0059	(0.029)(48.7)/y
Trichlorophenol	0.0020	(0.010)(48.7)/y
y = wastewater discharged in kgal per ton of product.		

SUBPART K

[BAT effluent limitations for non-integrated mills where lightweight papers are produced from purchased pulp—electrical grade papers subdivision]

Pollutant or pollutant property	Maximum for any 1 day	
	Kg/kkg (or pounds per 1,000 lb) of product	Milligrams/liter
Pentachlorophenol	0.0093	(0.029)(76.9)/y
Trichlorophenol	0.0032	(0.010)(76.9)/y
y = wastewater discharged in kgal per ton of product.		

§ 430.115 New source performance standards (NSPS).

Any new source subject to this subpart must achieve the following new source performance standards (NSPS), except that non-continuous dischargers shall not be subject to the maximum day and average of 30 consecutive days effluent limitations for BOD5 and TSS, but shall be subject to annual average effluent limitations. Also, for non-continuous dischargers, concentration limitations (mg/l) shall apply, where provided. Concentration limitations will only apply to non-continuous dischargers. Only facilities where chlorophenolic-containing biocides are used shall be subject to pentachlorophenol and trichlorophenol limitations. Permittees not using chlorophenolic-containing biocides must certify to the permit-issuing authority that they are not using these biocides:

SUBPART K

[NSPS for non-integrated mills where fine paper is produced from purchased pulp—wood fiber furnish subdivision]

Pollutant or pollutant property	Kg/kkg (or pounds per 1,000 lb) of product		
	Continuous dischargers		Non-continuous dischargers (Annual average)
	Maximum for any 1 day	Average of daily values for 30 consecutive days	
BOD5	3.5	1.9	1.0
TSS	4.4	2.3	1.2
pH	(1)	(1)	(1)

	Maximum for any 1 day	
	Kg/kkg (or pounds per 1,000 lb) of product	Milligrams/liter
Pentachlorophenol	0.0018	(0.047)(9.4)/y
Trichlorophenol	0.00064	(0.016)(9.4)/y
y=wastewater discharged in kgal per ton at all times.		

[1] Within the range of 5.0 to 9.0 at all times.

SUBPART K

[NSPS for non-integrated mills where fine paper is produced from purchased pulp—cotton fiber furnish subdivision]

Pollutant or pollutant property	Kg/kkg (or pounds per 1,000 lb) of product		
	Continuous dischargers		Non-continuous dischargers (annual average)
	Maximum for any 1 day	Average of daily values for 30 consecutive days	
BOD5	7.8	4.2	2.2
TSS	9.5	4.9	2.6
pH	(1)	(1)	(1)

	Maximum for any 1 day	
	Kg/kkg (or pounds per 1,000 lb) of product	Milligrams/liter
Pentachlorophenol	0.0051	(0.039)(31.1)/y
Trichlorophenol	0.0018	(0.014)(31.1)/y
y = wastewater discharged in kgal per ton at all times.		

[1] Within the range of 5.0 to 9.0 at all times.

SUBPART K

[NSPS for non-integrated mills where lightweight papers are produced from purchased pulp]

Pollutant or pollutant property	Kg/kkg (or pounds per 1,000 lb) of product		
	Continuous dischargers		Non-continuous dischargers (annual average)
	Maximum for any 1 day	Average of daily values for 30 consecutive days	
BOD5	13.7	6.7	4.5
TSS	12.0	5.2	3.2
pH	(1)	(1)	(1)

	Maximum for any 1 day	
	Kg/kkg (or pounds per 1,000 lb) of product	Milligrams/liter
Pentachlorophenol	0.0059	(0.037)(38.2)/y
Trichlorophenol	0.0020	(0.013)(38.2)/y
y = wastewater discharged in kgal per ton at all times.		

[1] Within the range of 5.0 to 9.0 at all times.

SUBPART K

[NSPS for non-integrated mills where lightweight papers are produced from purchased pulp—electrical grade papers subdivision]

Pollutant or pollutant property	Kg/kkg (or pounds per 1,000 lb) of product		
	Continuous dischargers		Non-continuous dischargers (annual average)
	Maximum for any 1 day	Average of daily values for 30 consecutive days	
BOD5	24.1	11.7	7.9
TSS	21.1	9.2	5.6
pH	(1)	(1)	(1)

	Maximum for any 1 day	
	Kg/kkg (or pounds per 1,000 lb) of product	Milligrams/liter
Pentachlorophenol	0.0093	(0.033)(66.8)/y
Trichlorophenol	0.0032	(0.012)(66.8)/y
y = wastewater discharged in kgal per ton at all times.		

[1] Within the range of 5.0 to 9.0 at all times.

§ 430.116 Pretreatment standards for existing sources (PSES).

Except as provided in 40 CFR 403.7 and 403.13, any existing source subject to this subpart that introduces pollutants into a publicly owned treatment works must: comply with 40 CFR part 403; and achieve the following pretreatment standards for existing sources (PSES) if it uses chlorophenolic-containing biocides. Permittees not using chlorophenolic-containing biocides must certify to the permit-issuing authority that they are not using these biocides. PSES must be attained on or before July 1, 1984:

SUBPART K

[PSES for non-integrated mills where fine paper is produced from purchased pulp—wood fiber furnish subdivision]

Pollutant or pollutant property	Maximum for any 1 day	
	Milligrams/liter (mg/l)	Kg/kkg (or pounds per 1,000 lb) of product[a]
Pentachlorophenol	(0.032)(15.2)/y	0.0020
Trichlorophenol	(0.010)(15.2)/y	0.00064
y = wastewater discharged in kgal per ton of product.		

[a] The following equivalent mass limitations are provided as guidance in cases when POTWs find it necessary to impose mass effluent limitations.

SUBPART K

[PSES for non-integrated mills where fine paper is produced from purchased pulp—cotton fiber furnish subdivision]

Pollutant or pollutant property	Maximum for any 1 day	
	Milligrams/liter (mg/l)	Kg/kkg (or pounds per 1,000 lb) of product[a]
Pentachlorophenol	(0.032)(42.3)/y	0.0056

SUBPART K—Continued

[PSES for non-integrated mills where fine paper is produced from purchased pulp—cotton fiber furnish subdivision]

Pollutant or pollutant property	Maximum for any 1 day	
	Milligrams/liter (mg/l)	Kg/kkg (or pounds per 1,000 lb) of product [a]
Trichlorophenol	(0.010)(42.3)/y	0.0018
y = wastewater discharged in kgal per ton of product.		

[a] The following equivalent mass limitations are provided as guidance in cases when POTWs find it necessary to impose mass effluent limitations.

SUBPART K

[PSES for non-integrated mills where lightweight papers are produced from purchased pulp]

Pollutant or pollutant property	Maximum for any 1 day	
	Milligrams/liter (mg/l)	Kg/kkg (or pounds per 1,000 lb) of product [a]
Pentachlorophenol	(0.032)(48.7)/y	0.0065
Trichlorophenol	(0.010)(48.7)/y	0.0032
y = wastewater discharged in kgal per ton of product.		

[a] The following equivalent mass limitations are provided as guidance in cases when POTWs find it necessary to impose mass effluent limitations.

SUBPART K

[PSES for non-integrated mills where lightweight papers are produced from purchased pulp—electrical grade papers subdivision]

Pollutant or pollutant property	Maximum for any 1 day	
	Milligrams/liter (mg/l)	Kg/kkg (or pounds per 1,000 lb) of product [a]
Pentachlorophenol	(0.032)(76.9)/y	0.010
Trichlorophenol	(0.010)(76.9)/y	0.0032
y = wastewater discharged in kgal per ton of product.		

[a] The following equivalent mass limitations are provided as guidance in cases when POTWs find it necessary to impose mass effluent limitations.

§ 430.117 Pretreatment standards for new sources (PSNS).

Except as provided in 40 CFR 403.7, any new source subject to this subpart that introduces pollutants into a publicly owned treatment works must: comply with 40 CFR part 403; and achieve the following pretreatment standards for new sources (PSNS) if it uses chlorophenolic-containing biocides. Permittees not using chlorophenolic-containing biocides must certify to the permit-issuing authority that they are not using these biocides:

SUBPART K

[PSNS for non-integrated mills where fine paper is produced from purchased pulp—wood fiber furnish subdivision]

Pollutant or pollutant property	Maximum for any 1 day	
	Milligrams/liter (mg/l)	Kg/kkg (or pounds per 1,000 lb) of product [a]
Pentachlorophenol	(0.052)(9.4)/y	0.0020
Trichlorophenol	(0.016)(9.4)/y	0.0064
y = wastewater discharged in kgal per ton of product.		

[a] The following equivalent mass limitations are provided as guidance in cases when POTWs find it necessary to impose mass effluent limitations.

SUBPART K

[PSNS for non-integrated mills where fine paper is produced from purchased pulp—cotton fiber furnish subdivision]

Pollutant or pollutant property	Maximum for any 1 day	
	Milligrams/liter (mg/l)	Kg/kkg (or pounds per 1,000 lb) of product [a]
Pentachlorophenol	(0.044)(31.1)/y	0.0056
Trichlorophenol	(0.014)(31.1)/y	0.0018
y = wastewater discharged in kgal per ton of product.		

[a] The following equivalent mass limitations are provided as guidance in cases when POTWs find it necessary to impose mass effluent limitations.

SUBPART K

[PSNS for non-integrated mills where lightweight papers are produced from purchased pulp]

Pollutant or pollutant property	Maximum for any 1 day	
	Milligrams/liter (mg/l)	Kg/kkg (or pounds per 1,000 lb) of product [a]
Pentachlorophenol	(0.041)(38.2)/y	0.0065
Trichlorophenol	(0.013)(38.2)/y	0.0020
y = wastewater discharged in kgal per ton of product.		

[a] The following equivalent mass limitations are provided as guidance in cases when POTWs find it necessary to impose mass effluent limitations.

SUBPART K

[PSNS for non-integrated mills where lightweight papers are produced from purchased pulp—electrical grade papers subdivision]

Pollutant or pollutant property	Maximum for any 1 day	
	Milligrams/liter (mg/l)	Kg/kkg (or pounds per 1,000 lb) of product [a]
Pentachlorophenol	(0.037)(66.8)/y	0.010
Trichlorophenol	(0.012)(66.8)/y	0.0032
y = wastewater discharged in kgal per ton of product.		

[a] The following equivalent mass limitations are provided as guidance in cases when POTWs find it necessary to impose mass effluent limitations.

Subpart L—Tissue, Filter, Non-Woven, and Paperboard From Purchased Pulp Subcategory

§ 430.120 Applicability; description of the tissue, filter, non-woven, and paperboard from purchased pulp subcategory.

The provisions of this subpart are applicable to discharges resulting from the production of tissue papers at non-integrated mills, filter and non-woven papers at non-integrated mills, and paperboard at non-integrated mills. The production of electrical grades of board and matrix board is not included in this subpart.

§ 430.121 Specialized definitions.

For the purpose of this subpart, the general definitions, abbreviations, and methods of analysis set forth in 40 CFR part 401 and § 430.01 of this part shall apply to this subpart.

§ 430.122 Effluent limitations representing the degree of effluent reduction attainable by the application of the best practicable control technology currently available (BPT).

Except as provided in 40 CFR 125.30 through 125.32, any existing point source subject to this subpart must achieve the following effluent limitations representing the degree of effluent reduction attainable by the application of the best practicable control technology currently available (BPT), except that non-continuous dischargers shall not be subject to the maximum day and average of 30 consecutive days limitations but shall be subject to annual average effluent limitations:

SUBPART L

[BPT effluent limitations for non-integrated mills where tissue papers are produced from purchased pulp]

Pollutant or pollutant property	Kg/kkg (or pounds per 1,000 lb) of product		
	Continuous dischargers		Non-continuous dischargers (annual average)
	Maximum for any 1 day	Average of daily values for 30 consecutive days	
BOD5	11.4	6.25	3.49
TSS	10.25	5.0	2.84
pH	(1)	(1)	(1)

1 Within the range of 5.0 to 9.0 at all times.

SUBPART L

[BPT effluent limitations for non-integrated mills where filter and non-woven papers are produced from purchased pulp]

Pollutant or pollutant property	Kg/kkg (or pounds per 1,000 lb) of product		
	Continuous dischargers		Non-continuous dischargers (annual average)
	Maximum for any 1 day	Average of daily values for 30 consecutive days	
BOD5	29.6	16.3	9.1
TSS	26.6	13.0	7.4
pH	(1)	(1)	(1)

1 Within the range of 5.0 to 9.0 at all times.

SUBPART L

[BPT effluent limitations for non-integrated mills where paperboard is produced from purchased pulp]

Pollutant or pollutant property	Kg/kkg (or pounds per 1,000 lb) of product		
	Continuous dischargers	Non-continuous dischargers (Annual average)	
		Maximum for any 1 day	Average of daily values for 30 consecutive days
BOD5	6.5	3.6	2.0
TSS	5.8	2.8	1.6
pH	(1)	(1)	(1)

1 Within the range of 5.0 to 9.0 at all times.

§ 430.123 Effluent limitations guidelines representing the degree of effluent reduction attainable by the application of the best conventional pollutant control technology (BCT).

Except as provided in 40 CFR 125.30 through 125.32, any existing point source subject to this subpart shall achieve the following effluent limitations representing the degree of effluent reduction attainable by the application of the best conventional pollutant control technology (BCT): The limitations shall be the same as those specified for conventional pollutants (which are defined in 40 CFR 401.16) in § 430.122 of this subpart for the best practicable control technology currently available (BPT).

§ 430.124 Effluent limitations representing the degree of effluent reduction attainable by the application of the best available technology economically achievable (BAT).

Except as provided in 40 CFR 125.30 through 125.32, any existing point source subject to this subpart where chlorophenolic-containing biocides are used must achieve the following effluent limitations representing the degree of effluent reduction attainable by the application of the best available technology economically achievable (BAT). Non-continuous dischargers shall not be subject to the maximum day mass limitations in kg/kkg (lb/1000 lb) but shall be subject to concentration limitations. Concentration limitations are only applicable to non-continuous dischargers. Permittees not using chlorophenolic-containing biocides must certify to the permit-issuing authority that they are not using these biocides:

SUBPART L

[BAT effluent limitations for non-integrated mills where tissue papers are produced from purchased pulp]

Pollutant or pollutant property	Maximum for any 1 day	
	Kg/kkg (or pounds per 1,000 lb) of product	Milligrams/liter
Pentachlorophenol	0.0028	(0.029)(22.9)/y
Trichlorophenol	0.00096	(0.010)(22.9)/y
y = wastewater discharged in kgal per ton of product.		

SUBPART L

[BAT effluent limitations for non-integrated mills where filter and non-woven papers are produced from purchased pulp]

Pollutant or pollutant property	Maximum for any 1 day	
	Kg/kkg (or pounds per 1,000 lb) of product	Milligrams/liter
Pentachlorophenol	0.0072	(0.029)(59.9)/y
Trichlorophenol	0.0025	(0.010)(59.9)/y
y = wastewater discharged in kgal per ton of product.		

SUBPART L

[BAT effluent limitations for non-integrated mills where paperboard is produced from purchased pulp]

Pollutant or pollutant property	Maximum for any 1 day	
	Kg/kkg (or pounds per 1,000 lb) of product	Milligrams/liter
Pentachlorophenol	0.0016	(0.029)(12.9)/y
Trichlorophenol	0.00054	(0.010)(12.9)/y
y = wastewater discharged in kgal per ton of product.		

§ 430.125 New source performance standards (NSPS).

Any new source subject to this subpart must achieve the following new source performance standards (NSPS), except that non-continuous dischargers shall not be subject to the maximum day and average of 30 consecutive days effluent limitations for BOD5 and TSS, but shall be subject to annual average effluent limitations. Also, for non-continuous dischargers, concentration limitations (mg/l) shall apply, where provided. Concentration limitations will only apply to non-continuous dischargers. Only facilities where chlorophenolic-containing biocides are used shall be subject to pentachlorophenol and trichlorophenol limitations. Permittees not using chlorophenolic-containing biocides must certify to the permit-issuing authority that they are not using these biocides:

SUBPART L

[NSPS for non-integrated mills where tissue papers are produced from purchased pulp]

Pollutant or pollutant property	Kg/kkg (or pounds per 1,000 lb) of product		
	Continuous dischargers		Non-continuous dischargers (annual average)
	Maximum for any 1 day	Average of daily values for 30 consecutive days	
BOD5	7.0	3.4	2.3
TSS	6.0	2.6	1.6
pH	(1)	(1)	(1)

	Maximum for any 1 day	
	Kg/kkg (or pounds per 1,000 lb) of product	Milligrams/liter
Pentachlorophenol	0.0028	(0.035)(19.1)/y
Trichlorophenol	0.00096	(0.012)(19.1)/y
y = wastewater discharged in kgal per ton at all times.		

[1] Within the range of 5.0 to 9.0 at all times.

SUBPART L

[NSPS for non-integrated mills where filter and non-woven papers are produced from purchased pulp]

Pollutant or pollutant property	Kg/kkg (or pounds per 1,000 lb) of product		
	Continuous dischargers		Non-continuous dischargers (annual average)
	Maximum for any 1 day	Average of daily values for 30 consecutive days	
BOD5	17.1	8.3	5.6
TSS	15.0	6.6	4.0
pH	(1)	(1)	(1)

	Maximum for any 1 day	
	Kg/kkg (or pounds per 1,000 lb) of product	Milligrams/liter
Pentachlorophenol	0.0072	(0.037)(47.5)/y
Trichlorophenol	0.0025	(0.013)(47.5)/y
y = wastewater discharged in kgal per ton at all times.		

[1] Within the range of 5.0 to 9.0 at all times.

SUBPART L

[NSPS for non-integrated mills where paperboard is produced from purchased pulp]

Pollutant or pollutant property	Kg/kkg (or pounds per 1,000 lb) of product		
	Continuous dischargers		Non-continuous dischargers (annual average)
	Maximum for any 1 day	Average of daily values for 30 consecutive days	
BOD5	4.0	1.9	1.3
TSS	3.5	1.5	0.9
pH	(1)	(1)	(1)

	Maximum for any 1 day	
	Kg/kkg (or pounds per 1,000 lb) of product	Milligrams/liter
Pentachlorophenol	0.0016	(0.033)(11.2)/y
Trichlorophenol	0.00054	(0.012)(11.2)/y
y = wastewater discharged in kgal per ton at all times.		

(1) Within the range of 5.0 to 9.0 at all times.

§ 430.126 Pretreatment standards for existing sources (PSES).

Except as provided in 40 CFR 403.7 and 403.13, any existing source subject to this subpart that introduces pollutants into a publicly owned treatment works must: comply with 40 CFR part 403; and achieve the following pretreatment standards for existing sources (PSES) if it uses chlorophenolic-containing biocides. Permittees not using chlorophenolic-

containing biocides must certify to the permit-issuing authority that they are not using these biocides. PSES must be attained on or before July 1, 1984:

SUBPART L

[PSES for non-integrated mills where tissue papers are produced from purchased pulp]

Pollutant or pollutant property	Maximum for any 1 day	
	Milligrams/liter (mg/l)	Kg/kkg (or pounds per 1,000 lb) of product [a]
Pentachlorophenol	(0.032)(22.9)/y	0.0031
Trichlorophenol	(0.010)(22.9)/y	0.00096
y = wastewater discharged in kgal per ton of product.		

[a] The following equivalent mass limitations are provided as guidance in cases when POTWs find it necessary to impose mass effluent limitations.

SUBPART L

[PSES for non-integrated mills where filter and non-woven papers are produced from purchased pulp]

Pollutant or pollutant property	Maximum for any 1 day	
	Milligrams/liter (mg/l)	Kg/kkg (or pounds per 1,000 lb) of product [a]
Pentachlorophenol	(0.032)(59.9)/y	0.0080
Trichlorophenol	(0.010)(59.9)/y	0.0025
y = wastewater discharged in kgal per ton of product.		

[a] The following equivalent mass limitations are provided as guidance in cases when POTWs find it necessary to impose mass effluent limitations.

SUBPART L

[PSES for non-integrated mills where paperboard is produced from purchased pulp]

Pollutant or pollutant property	Maximum for any 1 day	
	Milligrams/liter (mg/l)	Kg/kkg (or pounds per 1,000 lb) of product [a]
Pentachlorophenol	(0.032)(12.9)/y	0.0017
Trichlorophenol	(0.010)(12.9)/y	0.00054
y = wastewater discharged in kgal per ton of product.		

[a] The following equivalent mass limitations are provided as guidance in cases when POTWs find it necessary to impose mass effluent limitations.

§ 430.127 Pretreatment standards for new sources (PSNS).

Except as provided in 40 CFR 403.7, any new source subject to this subpart that introduces pollutants into a publicly owned treatment works must: comply with 40 CFR part 403; and achieve the following pretreatment standards for new sources (PSNS) if it uses chlorophenolic-containing biocides. Permittees not using chlorophenolic-containing biocides must certify to the permit-issuing authority that they are not using these biocides:

SUBPART L

[PSNS for non-integrated mills where tissue papers are produced from purchased pulp]

Pollutant or pollutant property	Maximum for any 1 day	
	Milligrams/liter (mg/l)	Kg/kkg (or pounds per 1,000 lb) of product [a]
Pentachlorophenol	(0.038)(19.1)/y	0.0031
Trichlorophenol	(0.012)(19.1)/y	0.00096
y = wastewater discharged in kgal per ton of product.		

[a] The following equivalent mass limitations are provided as guidance in cases when POTWs find it necessary to impose mass effluent limitations.

SUBPART L

[PSNS for non-integrated mills where filter and non-woven papers are produced from purchased pulp]

Pollutant or pollutant property	Maximum for any 1 day	
	Milligrams/liter (mg/l)	Kg/kkg (or pounds per 1,000 lb) of product [a]
Pentachlorophenol	(0.040)(47.5)/y	0.0080
Trichlorophenol	(0.013)(47.5)/y	0.0025
y = wastewater discharged in kgal per ton of product.		

[a] The following equivalent mass limitations are provided as guidance in cases when POTWs find it necessary to impose mass effluent limitations.

SUBPART L

[PSNS for non-integrated mills where paperboard is produced from purchased pulp]

Pollutant or pollutant property	Maximum for any 1 day	
	Milligrams/liter (mg/l)	Kg/kkg (or pounds per 1,000 lb) of product [a]
Pentachlorophenol	(0.037)(11.2)/y	0.0017
Trichlorophenol	(0.012)(11.2)/y	0.00054
y = wastewater discharged in kgal per ton of product.		

[a] The following equivalent mass limitations are provided as guidance in cases when POTWs find it necessary to impose mass effluent limitations.

Appendix A to Part 430—Methods 1650 and 1653

Method 1650—Adsorbable Organic Halides by Adsorption and Coulometric Titration

1.0 Scope and Application

1.1 This method is for determination of adsorbable organic halides (AOX) associated with the Clean Water Act; the Resource Conservation and Recovery Act; the Comprehensive Environmental Response, Compensation, and Liability Act; and other organic halides amenable to combustion and coulometric titration. The method is designed to meet the survey and monitoring requirements of the Environmental Protection Agency (EPA).

1.2 The method is applicable to the determination of AOX in water and wastewater. This method is a combination of several existing methods for organic halide measurements (References 1 through 7).

1.3 The method can be used to measure organically-bound halides (chlorine, bromine, iodine) present in dissolved or suspended form. Results are reported as organic chloride (Cl^-). The detection limit of the method is usually dependent on interferences rather than instrumental limitations. A method detection limit (MDL; Reference 8) of 6.6 µg/L, and a minimum level (ML; Section 18) of 20 µg/L, can be achieved with no interferences present.

1.4 This method is for use by or under the supervision of analysts experienced in the use of a combustion/micro-coulometer. Each laboratory that uses this method must demonstrate the ability to generate acceptable results using the procedures described in Section 9.2.

1.5 Any modification of the method beyond those expressly permitted (Section 9.1.2) is subject to application and approval of an alternate test procedure under 40 CFR 136.4 and 136.5.

2.0 Summary of Method

2.1 Sample preservation: Residual chlorine that may be present is removed by the addition of sodium thiosulfate. Samples are adjusted to a pH < 2 and maintained at 0 to 4°C until analysis.

2.2 Sample analysis: Organic halide in water is determined by adsorption onto granular activated carbon (GAC), washing the adsorbed sample and GAC to remove inorganic halide, combustion of the sample and GAC to form the hydrogen halide, and titration of the hydrogen halide with a micro-coulometer, as shown in Figure 1.

2.3 Micro-coulometer.

2.3.1 This detector operates by maintaining a constant silver-ion concentration in a titration cell. An electric potential is applied to a solid silver electrode to produce silver ions in the cell. As hydrogen halide produced from the combustion of organic halide enters the cell, it is partitioned into an acetic acid electrolyte where it precipitates as silver halide. The current produced is integrated over the combustion period. The electric charge is proportional to the number of moles of halogen captured in the cell (Reference 6).

2.3.2 The mass concentration of organic halides is reported as an equivalent concentration of organically bound chloride (Cl^-).

3.0 Definitions

3.1 Adsorbable organic halides is defined as the analyte measured by this method. The nature of the organo-halides and the presence of semi-extractable material will influence the amount measured and interpretation of results.

3.2 Definitions for terms used in this method are given in the glossary at the end of the method (Section 18).

4.0 Interferences

4.1 Solvents, reagents, glassware, and other sample processing hardware may yield elevated readings from the micro-coulometer. All materials used in the analysis shall be demonstrated to be free from interferences under the conditions of analysis by running method blanks initially and with each sample batch (samples started through the adsorption process in a given eight-hour shift, to a maximum of 20 samples). Specific selection of reagents and purification of solvents may be required.

4.2 Glassware is cleaned by detergent washing in hot water, rinsing with tap water and distilled water, capping with aluminum foil, and baking at 450°C for at least one hour. For some glassware, immersion in a chromate cleaning solution prior to detergent washing may be required. If blanks from glassware without cleaning or with fewer cleaning steps show no detectable organic halide, the cleaning steps that do not eliminate organic halide may be omitted.

4.3 Most often, contamination results from methylene chloride vapors in laboratories that perform organic extractions. Heating, ventilating, and air conditioning systems that are shared between the extraction laboratory and the laboratory in which organic halide measurements are performed transfer the methylene chloride vapors to the air in the organic halide laboratory. Exposure of the activated carbon

used in the analysis results in contamination. Separate air handling systems, charcoal filters, and glove boxes can be used to minimize this exposure.

4.4 Activated carbon.

4.4.1 The purity of each lot of activated carbon must be verified before each use by measuring the adsorption capacity and the background level of halogen (Section 9.5). The stock of activated carbon should be stored in its granular form in a glass container that is capped tightly. Protect carbon at all times from sources of halogen vapors.

4.4.2 Inorganic substances such as chloride, chlorite, bromide, and iodide will adsorb on activated carbon to an extent dependent on their original concentration in the aqueous solution and the volume of sample adsorbed. Treating the activated carbon with a solution of nitrate causes competitive desorption of inorganic halide species. However, if the inorganic halide concentration is greater than 2,000 times the organic halide concentration, artificially high results may be obtained.

4.4.3 Halogenated organic compounds that are weakly adsorbed on activated carbon are only partially recovered from the sample. These include certain alcohols and acids such as chloroethanol and chloroacetic acid that can be removed from activated carbon by the nitrate wash.

4.5 Polyethylene gloves should be worn when handling equipment surfaces in contact with the sample to prevent transfer of contaminants that may be present on the hands.

5.0 Safety

5.1 The toxicity or carcinogenicity of each reagent used in this method has not been precisely determined; however, each chemical substance should be treated as a potential health hazard. Exposure to these substances should be reduced to the lowest possible level. The laboratory is responsible for maintaining a current awareness file of OSHA regulations regarding the safe handling of the chemicals specified in this method. A reference file of material safety data sheets (MSDSs) should be made available to all personnel involved in the chemical analysis. Additional information on laboratory safety can be found in References 9 through 11.

5.2 This method employs strong acids. Appropriate clothing, gloves, and eye protection should be worn when handling these substances.

5.3 Field samples may contain high concentrations of toxic volatile compounds. Sample containers should be opened in a hood and handled with gloves that will prevent exposure.

6.0 Equipment and Supplies

Note: Brand names, suppliers, and part numbers are for illustrative purposes only. No endorsement is implied. Equivalent performance may be achieved using apparatus and materials other than those specified here, but demonstration of equivalent performance that meets the requirements of this method is the responsibility of the laboratory.

6.1 Sampling equipment.

6.1.1 Bottles: 100- to 4000-mL, amber glass, sufficient for all testing (Section 8.2). Detergent water wash, chromic acid rinse, rinse with tap and distilled water, cover with aluminum foil, and heat to 450°C for at least one hour before use.

6.1.2 PTFE liner: Cleaned as above and baked at 100 to 200°C for at least one hour.

6.1.3 Bottles and liners must be lot certified to be free of organic halide by running blanks according to this method.

6.2 Scoop for granular activated carbon (GAC): Capable of precisely measuring 40 mg (±5 mg) GAC (Dohrmann Measuring Cup 521–021, or equivalent).

6.3 Batch adsorption and filtration system.

6.3.1 Adsorption system: Rotary shaker, wrist action shaker, ultrasonic system, or other system for assuring thorough contact of sample with activated carbon. Systems different from the one described below must be demonstrated to meet the performance requirements in Section 9 of this method.

6.3.1.1 Erlenmeyer flasks: 250- to 1500-mL with ground-glass stopper, for use with rotary shaker.

6.3.1.2 Shake table: Sybron Thermolyne Model LE ''Big Bill'' rotator/shaker, or equivalent.

6.3.1.3 Rack attached to shake table to permit agitation of 16 to 25 samples simultaneously.

6.3.2 Filtration system (Figure 2).

6.3.2.1 Vacuum filter holder: Glass, with fritted-glass support (Fisher Model 09–753E, or equivalent).

6.3.2.2 Polycarbonate filter: 0.40 to 0.45 micron, 25-mm diameter (Micro Separations Inc, Model K04CP02500, or equivalent).

6.3.2.3 Filter forceps: Fisher Model 09–753–50, or equivalent, for handling filters. Two forceps may better aid in handling filters. Clean by washing with detergent and water, rinsing with tap and deionized water, and air drying on aluminum foil.

6.3.2.4 Vacuum flask: 500- to 1500-mL (Fisher 10–1800, or equivalent).

6.3.2.5 Vacuum Source: A pressure/vacuum pump, rotary vacuum pump, or other vacuum source capable of providing at least 610 mm (24 in.) Hg vacuum at 30 L/min free air displacement.

6.3.2.6 Stopper and tubing to mate the filter holder to the flask and the flask to the pump.

6.3.2.7 Polyethylene gloves: (Fisher 11–394–110–B, or equivalent).

6.4 Column adsorption system.

6.4.1 Adsorption module: Dohrmann AD–2, Mitsubishi TXA–2, or equivalent with pressurized sample and nitrate-wash reservoirs, adsorption columns, column housings, gas and gas pressure regulators, and receiving vessels. For each sample reservoir, there are two adsorption columns connected in series. A small steel funnel for filling the columns and a rod for pushing out the carbon are also required. A schematic of the column adsorption system is shown in Figure 3.

6.4.2 Adsorption columns: Pyrex, 5 ± 0.2 cm long × 2 mm ID, to hold 40 mg of granular activated carbon (GAC).

6.4.3 Cerafelt: Johns-Manville, or equivalent, formed into plugs using stainless steel borer (2 mm ID) with ejection rod (available from Dohrmann or Mitsubishi) to hold 40 mg of granular activated carbon (GAC). Caution: Handle Cerafelt with gloves.

6.4.4 Column holders: To support adsorption columns.

6.5 Combustion/micro-coulometer system: Commercially available as a single unit or assembled from parts. At the time of the writing of this method, organic halide units were commercially available from the Dohrmann Division of Rosemount Analytical, Santa Clara, California; Euroglas BV, Delft, the Netherlands; and Mitsubishi Chemical Industries, Ltd., Tokyo, Japan.

6.5.1 Combustion system: Older systems may not have all of the features shown in Figure 4. These older systems may be used provided the performance requirements (Section 9) of this method are met.

6.5.1.1 Combustion tube: Quartz, capable of being heated to 800 to 1000 °C and accommodating a boat sampler. The tube must contain an air lock for introduction of a combustion boat, connections for purge and combustion gas, and connection to the micro-coulometer cell.

6.5.1.2 Tube furnace capable of controlling combustion tube in the range of 800 to 1000 °C.

6.5.1.3 Boat sampler: Capable of holding 35 to 45 mg of activated carbon and a polycarbonate filter, and fitting into the combustion tube (Section 6.5.1.1). Some manufacturers offer an enlarged boat and combustion tube for this purpose. Under a time-controlled sequence, the boat is first moved into an evaporation zone where water and other volatiles are evaporated, and then into the combustion zone where the carbon and all other organic material in the boat are burned in a flowing oxygen stream. The evolved gases are transported by a non-reactive carrier gas to the micro-coulometer cell.

6.5.1.4 Motor driven boat sampler: Capable of advancing the combustion boat into the furnace in a reproducible time sequence. A suggested time sequence is as follows:

A. Establish initial gas flow rates: 160 mL/min CO_2; 40 mL/min O_2.

B. Sequence start.

C. Hold boat in hatch for five seconds to allow integration for baseline subtraction.

D. Advance boat into vaporization zone.

E. Hold boat in vaporization zone for 110 seconds.

F. Establish gas flow rates for combustion: 200 mL/min O_2; 0 mL/min CO_2; advance boat into pyrolysis zone (800°C).

G. Hold boat in pyrolysis zone for six minutes.

H. Return gas flow rates to initial values; retract boat into hatch to cool and to allow remaining HX to be swept into detector (approximately two minutes).

I. Stop integration at 10 minutes after sequence start.

Note: If the signal from the detector does not return to baseline, it may be necessary to extend the pyrolysis time.The sequence above may need to be optimized for each instrument.

6.5.1.5 Absorber: Containing sulfuric acid to dry the gas stream after combustion to

prevent backflush of electrolyte is highly recommended.

6.5.2 Micro-coulometer system: Capable of detecting the equivalent of 0.2 µg of Cl^- at a signal-to-noise ratio of 2; capable of detecting the equivalent of 1 µg of Cl^- with a relative standard deviation less than 10%, and capable of accumulating a minimum of the equivalent of 500 µg of Cl^- before a change of electrolyte is required.

6.5.2.1 Micro-coulometer cell: The three cell designs presently in use are shown in Figure 1. Cell operation is described in Section 2.

6.5.2.2 Cell controller: Electronics capable of measuring the small currents generated in the cell and accumulating and displaying the charge produced by hydrogen halides entering the cell. A strip-chart recorder is desirable for display of accumulated charge.

6.6 Miscellaneous glassware: nominal sizes are specified below; other sizes may be used, as necessary.

6.6.1 Volumetric flasks: 5-, 10-, 25-, 50-, 100-, and 1000-mL.

6.6.2 Beakers: 100-, 500-, and 1000-mL.

6.6.3 Volumetric pipets: 1- and 10-mL with pipet bulbs.

6.6.4 Volumetric micro-pipets: 10-, 20-, 50-, 100-, 200-, and 500-µL with pipet control (Hamilton 0010, or equivalent).

6.6.5 Graduated cylinders: 10-, 100-, and 1000-mL.

6.7 Micro-syringes: 10-, 50-, and 100-µL.

6.8 Balances.

6.8.1 Top-loading, capable of weighing 0.1 g.

6.8.2 Analytical, capable of weighing 0.1 mg.

6.9 pH meter.

6.10 Wash bottles: 500- to 1000-mL, PTFE or polyethylene.

6.11 Strip-chart recorder: suggested but not required—useful for determining end of integration (Section 11.4.2).

7.0 Reagents and Standards

7.1 Granular activated carbon (GAC): 75 to 150 µm (100 to 200 mesh); (Dohrmann, Mitsubishi, Carbon Plus, or equivalent), with chlorine content less than 1 µg Cl^- per scoop (< 25 µg Cl^- per gram), adsorption capacity greater than 1000 µg Cl^- (as 2,4,6-trichlorophenol) per scoop (>25,000 µg/g), inorganic halide retention of less than 1 µg Cl^- per scoop in the presence of 10 mg of inorganic halide (< 20 µg Cl^- per gram in the presence of 2500 mg of inorganic halide), and that meets the other test criteria in this method.

7.2 Reagent water: Water in which organic halide is not detected by this method.

7.2.1 Preparation: Reagent water may be generated by:

7.2.1.1 Activated carbon: Pass tap water through a carbon bed (Calgon Filtrasorb-300, or equivalent).

7.2.1.2 Water purifier: Pass tap water through a purifier (Millipore Super Q, or equivalent).

7.2.2 pH adjustment: Adjust the pH of the reagent water to < 2 with nitric acid for all reagent water used in this method, except for the acetic acid solution (Section 7.13).

7.3 Nitric acid (HNO_3): Concentrated, analytical grade.

7.4 Sodium chloride (NaCl) solution (100 µg/mL of Cl^-): Dissolve 0.165g NaCl in 1000 mL reagent water. This solution is used for cell testing and for the inorganic halide rejection test.

7.5 Ammonium chloride (NH_4Cl) solution (100 µg/mL of Cl^-): Dissolve 0.1509 g NH_4Cl in 1000 mL reagent water.

7.6 Sulfuric acid: Reagent grade (specific gravity 1.84).

7.7 Oxygen: 99.9% purity.

7.8 Carbon Dioxide: 99.9% purity.

7.9 Nitrate stock solution: In a 1000-mL volumetric flask, dissolve 17g of $NaNO_3$ in approximately 100 mL of reagent water, add 1.4 mL nitric acid (Section 7.3) and dilute to the mark with reagent water.

7.10 Nitrate wash solution: Dilute 50 mL of nitrate stock solution (Section 7.9) to 1000 mL with reagent water.

7.11 Sodium thiosulfate ($Na_2S_2O_3$) solution (1 N): Weigh 79 grams of $Na_2S_2O_3$ in a 1-L volumetric flask and dilute to the mark with reagent water.

7.12 Trichlorophenol solutions.

Note: The calibration solutions in this section employ 100-mL volumes. For determinations requiring a larger or smaller volume, increase or decrease the size of the volumetric flasks commensurately. For example, if a 1-L sample is to be analyzed, use 1000-mL flasks (Sections 7.12.3.1 and 7.12.4) and 10 times the volume of reagent water (Sections 7.12.3.1 and 7.12.4). The volume of stock solution added to the calibration solutions and precision and recovery (PAR) test solution remain as specified (Sections 7.12.3.2 and 7.12.4) so that the same amount of chloride is delivered to the coulometric cell regardless of the volume of the calibration and PAR solutions.

7.12.1 Methanol: HPLC grade.

7.12.2 Trichlorophenol stock solution (1.0 mg/mL of Cl^-): Dissolve 0.186 g of 2,4,6-trichlorophenol in 100 mL of halide-free methanol.

7.12.3 Trichlorophenol calibration solutions.

7.12.3.1 Place approximately 90 mL of reagent water in each of five 100-mL volumetric flasks.

7.12.3.2 Using a calibrated micro-syringe or micro-pipets, add 2, 5, 10, 30, and 80 µL of the trichlorophenol stock solution (Section 7.12.2) to the volumetric flasks and dilute each to the mark with reagent water to produce calibration solutions of 2, 5, 10, 30, and 80 µg Cl^- per 100 mL of solution (20, 50, 100, 300, and 800 µg/L).

7.12.3.3 Some instruments may have a calibration range that does not extend to 800 µg/L (80 µg of Cl^-). For those instruments, a narrower dynamic range may be used. However, if the concentration of halide in a sample exceeds that range, the sample must be diluted to bring the concentration within the range calibrated.

7.12.4 Trichlorophenol precision and recovery (PAR) test solution (10 µg/L of Cl^-): Partially fill a 100-mL volumetric flask, add 10 µL of the stock solution (Section 7.12.2), and dilute to the mark with reagent water.

7.13 Acetic acid solution: Containing 30 to 70% acetic acid in deionized water, per the instrument manufacturer's instructions.

8.0 Sample Collection, Preservation, and Storage

8.1 Sample preservation.

8.1.1 Residual chlorine: If the sample is known or suspected to contain free chlorine, the chlorine must be reduced to eliminate positive interference that may result from continued chlorination reactions. A knowledge of the process from which the sample is collected may be of value in determining whether dechlorination is necessary. Immediately after sampling, test for residual chlorine using the following method or an alternative EPA method (Reference 12):

8.1.1.1 Dissolve a few crystals of potassium iodide in the sample and add three to five drops of a 1% starch solution. A blue color indicates the presence of residual chlorine.

8.1.1.2 If residual chlorine is found, add 1 mL of sodium thiosulfate solution (Section 7.11) for each 2.5 ppm of free chlorine or until the blue color disappears. Do not add an excess of sodium thiosulfate. Excess sodium thiosulfate may cause decomposition of a small fraction of the OX.

8.1.2 Acidification: Adjust the pH of aqueous samples to < 2 with nitric acid. Acidification inhibits biological activity and stabilizes chemical degradation, including possible dehalogenation reactions that may occur at high pH. Acidification is necessary to facilitate thorough adsorption.

8.1.3 Refrigeration: Maintain samples at a temperature of 0 to 4° C from time of collection until analysis.

8.2 Collect the amount of sample necessary for analysis (Section 11) and all QC tests (Section 9) in an amber glass bottle of the appropriate size (Section 6.1.1).

8.3 Analyze samples no less than three days nor more than six months after collection.

9.0 Quality Control

9.1 Each laboratory that uses this method is required to operate a formal quality assurance program. The minimum requirements of this program consist of an initial demonstration of laboratory capability, an ongoing analysis of standards and blanks as tests of continued performance, and analysis of matrix spike and matrix spike duplicate (MS/MSD) samples to assess accuracy and precision. Laboratory performance is compared to established performance criteria to determine if the results of analyses meet the performance characteristics of the method.

9.1.1 The laboratory shall make an initial demonstration of the ability to produce acceptable results with this method. This ability is demonstrated as described in Section 9.2.

9.1.2 The laboratory is permitted to modify this method to improve separations or lower the costs of measurements, provided that all performance specifications are met. Each time a modification is made to the method, the laboratory is required to repeat the procedures in Sections 9.2.2 and 10 to demonstrate continued method performance. If the detection limit of the method will be affected by the modification, the laboratory should demonstrate that the MDL (40 CFR

136, Appendix B) is less than or equal to the MDL in this method or one-third the regulatory compliance level, whichever is higher.

9.1.3 The laboratory shall spike 10% of the samples with known concentrations of 2,4,6-trichlorophenol to monitor method performance and matrix interferences (interferences caused by the sample matrix). This test is described in Section 9.3. When results of these spikes indicate atypical method performance for samples, the samples are diluted to bring method performance within acceptable limits.

9.1.4 Analyses of blanks are required to demonstrate freedom from contamination. The procedures and criteria for analysis of blanks are described in Section 9.4.

9.1.5 The laboratory shall, on an ongoing basis, demonstrate through the analysis of the precision and recovery (PAR) standard that the analysis system is in control. These procedures are described in Section 9.10.

9.1.6 The laboratory shall perform quality control tests on the granular activated carbon. These procedures are described in Section 9.5.

9.1.7 Samples are analyzed in duplicate to demonstrate precision. These procedures are described in Section 9.6.

9.2 Initial demonstration of laboratory capability.

9.2.1 Method Detection Limit (MDL): To establish the ability to detect AOX, the laboratory should determine the MDL per the procedure in 40 CFR 136, Appendix B using the apparatus, reagents, and standards that will be used in the practice of this method. An MDL less than or equal to the MDL in Section 1.3 should be achieved prior to the practice of this method.

9.2.2 Initial precision and recovery (IPR): To establish the ability to generate acceptable precision and recovery, the laboratory shall perform the following operations:

9.2.2.1 Analyze four aliquots of the PAR standard (Section 7.12.4) and a method blank according to the procedures in Sections 9.4 and 11.

9.2.2.2 Using the blank-subtracted results of the set of four analyses, compute the average percent recovery (X) and the standard deviation of the percent recovery (s) for the results.

9.2.2.3 The average percent recovery shall be in the range of 81 to 114 µg/L and the standard deviation shall be less than 8 µg/L. If X and s meet these acceptance criteria, system performance is acceptable and analysis of blanks and samples may begin. If, however, s exceeds the precision limit or X falls outside the range for recovery, system performance is unacceptable. In this case, correct the problem and repeat the test.

9.3 Matrix spikes: The laboratory shall spike a minimum of 10% of samples from a given matrix type (e.g., C-stage filtrate, produced water, treated effluent) in duplicate (MS/MSD). If only one sample from a given matrix type is analyzed, an additional two aliquots of that sample shall be spiked.

9.3.1 The concentration of the analytes spiked into the MS/MSD shall be determined as follows:

9.3.1.1 If, as in compliance monitoring, the concentration of OX is being checked against a regulatory concentration limit, the spiking level shall be at that limit or at one to five times higher than the background concentration determined in Section 9.3.2, whichever concentration is higher.

9.3.1.2 If the concentration of OX is not being checked against a regulatory limit, the spike shall be at the concentration of the precision and recovery standard (PAR; Section 7.12.4) or at one to five times higher than the background concentration determined in Section 9.3.2, whichever concentration is higher.

9.3.2 Analyze one sample out of each batch of 10 samples from each site to determine the background concentration of AOX. If necessary, prepare a solution of 2,4,6-trichlorophenol appropriate to produce a level in the sample one to five times the background concentration. Spike two additional sample aliquots with spiking solution and analyze them to determine the concentration after spiking.

9.3.2.1 Compute the percent recovery of each analyte in each aliquot:

$$\%\ \text{Recovery} = \frac{100\ (\text{Found} - \text{Background})}{T}$$

where:

T is the true value of the spike

9.3.2.2 Compute the relative percent difference (RPD) between the two results (not between the two recoveries) as described in Section 12.4.

9.3.2.3 If the RPD is less than 20%, and the recoveries for the MS and MSD are within the range of 78 to 116%, the results are acceptable.

9.3.2.4 If the RPD is greater than 20%, analyze two aliquots of the precision and recovery standard (PAR).

9.3.2.4.1 If the RPD for the two aliquots of the PAR is greater than 20%, the analytical system is out of control. In this case, repair the problem and repeat the analysis of the sample batch, including the MS/MSD.

9.3.2.4.2 If, however, the RPD for the two aliquots of the PAR is less than 20%, dilute the sample chosen for the MS/MSD by a factor of 2–10 (to remain within the working range of the analytical system) and repeat the MS/MSD test. If the RPD is still greater than 20%, the result may not be reported for regulatory compliance purposes. In this case, choose another sample for the MS/MSD and repeat analysis of the sample batch.

9.3.2.5 If the percent recovery for both the MS and MSD are less than 78% or greater than 116%, analyze the precision and recovery (PAR) standard.

9.3.2.5.1 If the recovery of the PAR is outside the 78 to 116% range, the analytical system is out of control. In this case, repair the problem and repeat the analysis of the sample batch, including the MS/MSD.

9.3.2.5.2 If the recovery of the PAR is within the range of 78 to 116%, dilute the sample, MS, and MSD by a factor of 2–10 (to remain within the working range of the analytical system) and re-analyze. If the results of the dilute analyses remain outside of the acceptable range, these results may not be reported for regulatory compliance purposes. In this case, choose another sample for the MS/MSD and repeat the analysis of the sample batch.

9.4 Blanks.

9.4.1 Reagent water blanks: Analyzed to demonstrate freedom from contamination.

9.4.1.1 Analyze a reagent water blank with each batch of samples. The blank must be analyzed immediately preceding calibration verification to allow for blank subtraction and to demonstrate freedom from contamination and memory effects, and must include all details of the procedure to be followed when analyzing samples.

9.4.1.2 Prepare the reagent water blank using a volume of reagent water equivalent to the volume used for sample preparation (Section 11.1). If using the micro-column procedure, adsorb the method blank using two columns, as described in Section 11. Combust the GAC from each column separately, as described in Section 11.

9.4.1.3 If the result from the blank from the batch method or the sum of the results from two columns is more than 20 µg/L, analysis of samples is halted until the source of contamination is eliminated and a blank shows no evidence of contamination at this level.

9.4.2 Nitrate-washed GAC blanks: Analyzed daily to demonstrate that the GAC is free from contamination.

9.4.2.1 Nitrate-washed GAC blank for the batch procedure: Analyze a batch nitrate-washed GAC blank by adding a scoop of dry GAC to the assembled filter apparatus containing the polycarbonate membrane and washing the GAC with the nitrate wash solution (Section 7.10) using the procedure in Section 11.2.6.

9.4.2.2 Nitrate-washed GAC blank for the column procedure: Analyze a column nitrate-washed GAC blank by assembling two carbon columns in series and washing the columns with the nitrate wash solution (Section 7.10) using the procedure in Section 11.3.4.2. Analyze the GAC in each column separately. The results of the second analysis must be within ±0.2 µg Cl^- of the first. A difference greater than 0.2 µg Cl^- indicates a lack of homogeneity in the GAC that could introduce unacceptable variability. If the difference exceeds this amount, the GAC should be replaced.

9.4.3 The result for the reagent water blank (Section 9.4.1) shall not exceed the result for the nitrate wash blank (Section 9.4.2.1 or 9.4.2.2) by more than 0.5 µg Cl^-.

9.5 Granular activated carbon (GAC) batch testing: Each lot number or batch of activated carbon received from a supplier is tested once before use to ensure adequate quality. Use only GAC that meets the test criteria below.

9.5.1 Contamination test: Analyze a scoop of GAC. Reject carbon if the amount of OX exceeds 1 µg (25 µg Cl^-/g).

9.5.2 Inorganic chloride adsorption test: Attempt to adsorb NaCl from 100 mL of a solution containing 100 mg/L in reagent water. Wash with nitrate solution and analyze. The amount of halide should be less than 1 µg Cl^- larger than the blank. A larger amount indicates significant uptake of inorganic chloride by the carbon. Reject carbon if the 1 µg level is exceeded.

9.6 Samples that are being used for regulatory compliance purposes shall be analyzed in duplicate.

9.6.1 The procedure for preparing duplicate sample aliquots is described in Section 11.5.

9.6.2 Calculate the RPD by following the same procedure described in Section 12.4.

9.6.3 If the RPD is greater than 20%, the analyses must be repeated.

9.6.4 If the RPD remains greater than 20%, the result may not be reported for regulatory compliance purposes.

9.7 The specifications in this method can be met if the apparatus used is calibrated properly and maintained in a calibrated state. The standards used for calibration (Section 10), calibration verification (Section 9.9), and for initial (Section 9.2.2) and ongoing (Section 9.10) precision and recovery should be identical, so that the most precise results will be obtained.

9.8 Depending on specific program requirements, field duplicates may be collected to determine the precision of the sampling technique.

9.9 At the beginning and end of each eight-hour shift during which analyses are performed, system performance and calibration are verified. Verification of system performance and calibration may be performed more frequently, if desired.

9.9.1 If performance and calibration are verified at the beginning and end of each shift (or more frequently), samples analyzed during that period are considered valid.

9.9.2 If performance and calibration are not verified at both the beginning and end of a shift (or more frequently), samples analyzed during that period must be reanalyzed.

9.9.3 If calibration is verified at the beginning of a shift, recalibration using the five standards described in Section 10.6 is not necessary; otherwise, the instrument must be recalibrated prior to analyzing samples (Section 10).

9.9.4 Cell maintenance and other changes to the analytical system that can affect system performance may not be performed during the eight-hour (or shorter) shift.

9.10 Calibration verification and ongoing precision and recovery: Calibration and system performance are verified by the analysis of the 100 µg/L PAR standard.

9.10.1 Analyze a blank (Section 9.4) and analyze the PAR standard (Section 7.12.4) immediately thereafter at the beginning and end of each shift. Compute the concentration of organic halide in the blank and in the PAR standard using the procedures in Section 12. The blank shall be less than 2 µg Cl^- (20 µg/L equivalent).

9.10.2 Subtract the result for the blank from the result of the PAR standard using the procedures in Section 12, and compute the percent recovery of the blank-subtracted PAR standard. The percent recovery shall be in the range of 78 to 116%.

9.10.3 If the recovery is within this range, the analytical process is in control and analysis of blanks and samples may proceed. If, however, the recovery is not within the acceptable range, the analytical process is not in control. In this event, correct the problem and repeat the ongoing precision and recovery test (Section 9.10), or recalibrate (Sections 10.5 through 10.6).

9.10.4 If the recovery is not within the acceptable range for the PAR standard analyzed at the end of the eight-hour shift, correct the problem, repeat the ongoing precision and recovery test (Section 9.10), or recalibrate (Sections 10.5 through 10.6), and reanalyze the sample batch that was analyzed during the eight-hour shift.

9.10.5 If the recovery is within the acceptable range at the end of the shift, and samples are to be analyzed during the next eight-hour shift, the end of shift verification may be used as the beginning of shift verification for the subsequent shift, provided the next eight-hour shift begins as the first shift ends.

9.11 It is suggested but not required that the laboratory develop a statement of data quality for AOX and develop QC charts to form a graphic demonstration of method performance. Add results that pass the specification in Section 9.10.2 to initial and previous ongoing data. Develop a statement of data quality by calculating the average percent recovery (R) and the standard deviation of percent recovery (s_r). Express the accuracy as a recovery interval from $R - 2s_r$ to $R + 2s_r$. For example, if R=95% and s_r=5%, the accuracy is 85 to 105%.

10.0 Calibration and Standardization

10.1 Assemble the OX system and establish the operating conditions necessary for analysis. Differences between various makes and models of instruments will require different operating procedures. Laboratories should follow the operating instructions provided by the manufacturer of their particular instrument. Sensitivity, instrument detection limit, precision, linear range, and interference effects must be investigated and established for each particular instrument. Calibration is performed when the instrument is first set up and when calibration cannot be verified (Section 9.9).

10.2 Cell performance test: Inject 100 µL of the sodium chloride solution (10 µg Cl^-; Section 7.4) directly into the titration cell electrolyte. Adjust the instrument to produce a reading of 10 µg Cl^-.

10.3 Combustion system test: This test can be used to assure that the combustion/micro-coulometer systems are performing properly without introduction of carbon. This test should be used during initial instrument setup and when instrument performance indicates a problem with the combustion system.

10.3.1 Designate a quartz boat for use with the ammonium chloride (NH_4Cl) solution only.

10.3.2 Inject 100 µL of the NH_4Cl solution (Section 7.5) into this boat and proceed with the analysis.

10.3.3 The result shall be between 9.5 and 10.5 µg Cl^-. If the recovery is not between these limits, the combustion or micro-coulometer systems are not performing properly. Check the temperature of the combustion system, verify that there are no leaks in the combustion system, confirm that the cell is performing properly (Section 10.2), and then repeat the test.

10.4 Trichlorophenol combustion test: This test can be used to assure that the combustion/micro-coulometer systems are performing properly when carbon is introduced. It should be used during instrument setup and when it is necessary to isolate the adsorption and combustion steps.

10.4.1 Inject 10 µL of the 1 mg/mL trichlorophenol stock solution (Section 7.12.2) onto one level scoop of GAC in a quartz boat.

10.4.2 Immediately proceed with the analysis to prevent loss of trichlorophenol and to prevent contamination of the carbon.

10.4.3 The result shall be between 9.0 and 11.0 µg Cl^-. If the recovery is not between these limits, the combustion/micro-coulometer system shall be adjusted and the test repeated until the result falls within these limits.

10.5 Background level of Cl^-: Determine the average background level of Cl^- for the entire analytical system as follows:

10.5.1 Using the procedure in Section 11 (batch or column) that will be used for the analysis of samples, determine the background level of Cl^- in each of three portions of reagent water. The volume of reagent water used shall be the same as the volume used for analysis of samples.

10.5.2 Calculate the average (mean) concentration of Cl^- and the standard deviation of the concentration.

10.5.3 The sum of the average concentration plus two times the standard deviation of the concentration shall be less than 20 µg/L. If not, the water or carbon shall be replaced, or the adsorption system moved to an area free of organic halide vapors, and the test (Section 10.5) shall be repeated. Only after this test is passed may calibration proceed.

10.6 Calibration by external standard: A calibration line encompassing the calibration range is developed using solutions of 2,4,6-trichlorophenol.

10.6.1 Analyze each of the five calibration solutions (Section 7.12.3) using the procedure in Section 11 (batch or column) that will be used for the analysis of samples, and the same procedure that was used for determination of the system background (Section 10.5). Analyze these solutions beginning with the lowest concentration and proceeding to the highest. Record the response of the micro-coulometer to each calibration solution.

10.6.2 Prepare a method blank as described in Section 9.4. Subtract the value of the blank from each of the five calibration results, as described in Section 12.

10.6.3 Calibration factor (ratio of response to concentration) Using the blank subtracted results, compute the calibration factor at each calibration point, and compute the average calibration factor and the relative standard deviation (coefficient of variation; Cv) of the calibration factor over the calibration range.

10.6.4 Linearity: The Cv of the calibration factor shall be less than 20%; otherwise, the calibration shall be repeated after adjustment of the combustion/micro-coulometer system and/or preparation of fresh calibration standards.

10.6.5 Using the average calibration factor, compute the percent recovery at each calibration point. The recovery at each calibration point shall be within the range of 80 to 111%. If any point is not within this range, a fresh calibration standard shall be

prepared for that point, this standard shall be analyzed, and the calibration factor (Section 10.6.3) and calibration linearity (Section 10.6.4) shall be computed using the new calibration point. All points used in the calibration must meet the 80 to 111% recovery specification.

11.0 Procedure

11.1 Sample dilution: Many samples will contain high concentrations of halide. If analyzed without dilution, the micro-coulometer can be overloaded, resulting in frequent cell cleaning and downtime. The following guidance is provided to assist in estimating dilution levels.

11.1.1 Paper and pulp mills that employ chlorine bleaching: Samples from pulp mills that use a chlorine bleaching process may overload the micro-coulometer. To prevent system overload, the maximum volume suggested for paper industry samples that employ halide in the bleaching process is 100 mL. An adsorption volume as small as 25 mL may be used, provided the concentration of AOX in the sample can be measured reliably, as defined by the requirements in Section 9.11. To minimize volumetric error, an adsorption volume less than 25 mL may not be used. If AOX cannot be measured reliably in a 100-mL sample volume, a sample volume to a maximum of 1000 mL must be used. The sample and adsorption volumes are suggested for paper industry samples employing chlorine compounds in the bleaching process:

Paper or pulp mill stream	Sample volume (mL)*	Adsorption volume (mL)
Evaporator condensate	100.0	100
Process water	100.0	100
Pulp mill effluent	30.0	50
Paper mill effluent	10.0	25
Combined mill effluent	5.0	25
Combined bleach effluent	1.0	25
C-stage filtrate	0.5	25
E-stage filtrate	0.5	25

*Assumes dilution to final volume of 100 mL. All sample aliquots (replicates, diluted samples) must be analyzed using the same fixed final volume (sample volume plus reagent water, as needed).

11.1.2 Sample dilution procedure.

11.1.2.1 Partially fill a precleaned volumetric flask with pH < 2 reagent water, allowing for the volume of sample to be added.

11.1.2.2 Mix sample thoroughly by tumbling or shaking vigorously.

11.1.2.3 Immediately withdraw the required sample aliquot using a pipet or micro-syringe.

Note: Because it will be necessary to rinse the pipet or micro-syringe (Section 11.1.2.5), it may be necessary to pre-calibrate the pipet or micro-syringe to assure that the exact volume desired will be delivered.

11.1.2.4 Dispense or inject the aliquot into the volumetric flask.

11.1.2.5 Rinse the pipet or syringe with small portions of reagent water and add to the flask.

11.1.2.6 Dilute to the mark with pH < 2 reagent water.

11.1.3 All samples to be reported for regulatory compliance monitoring purposes must be analyzed in duplicate, as described in Section 11.5.

11.1.4 Pulp and Paper in-process samples: The concentration of organic halide in in-process samples has been shown to be 20 to 30% greater using the micro-column adsorption technique than using the batch adsorption technique. For this reason, the micro-column technique shall be used for monitoring in-process samples. Examples of in-process samples include: combined bleach plant effluent, C-stage filtrate, and E-stage filtrate.

11.2 Batch adsorption and filtration.

11.2.1 Place the appropriate volume of sample (diluted if necessary), preserved as described in Section 8, into an Erlenmeyer flask.

11.2.2 Add 5 mL of nitrate stock solution to the sample aliquot.

11.2.3 Add one level scoop of activated carbon that has passed the quality control tests in Section 9.

11.2.4 Shake the suspension for at least one hour in a mechanical shaker.

11.2.5 Filter the suspension through a polycarbonate membrane filter. Filter by suction until the liquid level reaches the top of the carbon.

11.2.6 Wash the inside surface of the filter funnel with 25 mL (±5 mL) of nitrate wash solution in several portions. After the level of the final wash reaches the top of the GAC, filter by suction until the cake is barely dry. The time required for drying should be minimized to prevent exposure of the GAC to halogen vapors in the air, but should be sufficient to permit drying of the cake so that excess water is not introduced into the combustion apparatus. A drying time of approximately 10 seconds under vacuum has been shown to be effective for this operation.

11.2.7 Carefully remove the top of the filter holder, making sure that no carbon is lost. This operation is most successfully performed by removing the clamp, tilting the top of the filter holder (the funnel portion) to one side, and lifting upward.

11.2.8 Using a squeeze bottle or micro-syringe, rapidly rinse the carbon from the inside of the filter holder onto the filter cake using small portions of wash solution. Allow the cake to dry under vacuum for no more than 10 seconds after the final rinse. Immediately turn the vacuum off.

11.2.9 Using tweezers, carefully fold the polycarbonate filter in half, then in fourths, making sure that no carbon is lost.

11.3 Column adsorption.

11.3.1 Column preparation: Prepare a sufficient number of columns for one day's operation as follows:

11.3.1.1 In a glove box or area free from halide vapors, place a plug of Cerafelt into the end of a clean glass column.

11.3.1.2 Fill the glass column with one level scoop (approximately 40 mg) of granular activated carbon that has passed the quality control tests in Section 9.

11.3.1.3 Insert a Cerafelt plug into the open end of the column to hold the carbon in place.

11.3.1.4 Store the columns in a glass jar with PTFE lined screw-cap to prevent infiltration of halide vapors from the air.

11.3.2 Column setup.

11.3.2.1 Install two columns in series in the adsorption module.

11.3.2.2 If the sample is known or expected to contain particulates that could prevent free flow of sample through the micro-columns, a Cerafelt plug is placed in the tubing ahead of the columns. If a measurement of the OX content of the particulates is desired, the Cerafelt plug can be washed with nitrate solution, placed in a combustion boat, and processed as a separate sample.

11.3.3 Adjusting sample flow rate: Because the flow rate used to load the sample onto the columns can affect the ability of the GAC to adsorb organic halides, the flow rate of the method blank is measured, and the gas pressure used to process samples is adjusted accordingly. The flow rate of the blank, which is composed of acidified reagent water and contains no particulate matter, should be greater than the flow rate of any sample containing even small amounts of particulate matter.

11.3.3.1 Fill the sample reservoir with the volume of reagent water chosen for the analysis (Section 9.4.1.2) that has been preserved and acidified as described in Section 8. Cap the reservoir.

11.3.3.2 Adjust the gas pressure per the manufacturer's instructions. Record the time required for the entire volume of reagent water to pass through both columns. The flow rate must not exceed 3 mL/min over the duration of the time required to adsorb the volume. If this flow rate is exceeded, adjust gas pressure, prepare another blank, and repeat the adsorption.

11.3.3.3 Once the flow rate for the blank has been established, the same adsorption conditions must be applied to all subsequent samples during that eight-hour shift, or until another method blank is processed, whichever comes first. To aid in overcoming breakthrough problems, a lower gas pressure (and, therefore, flow rate) may be used for processing of samples, if desired. If the sample adsorption unit is disassembled or cleaned, the flow rate must be checked before processing additional samples.

11.3.3.4 Elute the pair of columns with 2 mL of nitrate wash solution. The flow rate of nitrate wash solution must not exceed 3 mL/min.

11.3.3.5 Separate the columns and mark for subsequent analysis.

11.3.4 The adsorption of sample volumes is performed in a similar fashion. Fill the sample reservoir with the sample volume chosen for the analysis (Section 11.1), that has been preserved as described in Section 8. All analyses must be performed with this volume (sample volume plus reagent water, as needed) in order to maintain a flow rate no greater than that determined for the blank (see Section 11.3.3).

11.3.4.1 Use the same gas pressure for sample adsorption as is used for the blank.

11.3.4.2 Elute the columns with 2 mL of the nitrate wash solution.

11.3.4.3 Separate the columns and mark for subsequent analysis.

11.3.5 If it is desirable to make measurements at levels lower than can be achieved with the sample volume chosen, or if the instrument response of an undiluted sample is less than three times the instrument response of the blank (Section 12.6.3), a larger sample volume must be used.

11.4 Combustion and titration.

11.4.1 Polycarbonate filter and GAC from batch adsorption.

11.4.1.1 Place the folded polycarbonate filter containing the GAC in a quartz combustion boat, close the airlock, and proceed with the automated sequence.

11.4.1.2 Record the signal from the micro-coulometer for a minimum integration time of 10 minutes and determine the concentration of Cl^- from calibration data, per Section 12.

11.4.2 Columns from column adsorption.

11.4.2.1 Using the push rod, push the carbon and the Cerafelt plug(s) from the first column into a combustion boat. Proceed with the automated sequence.

11.4.2.2 Record the signal from the micro-coulometer for a minimum integration time of 10 minutes and determine the concentration of Cl^- for the first column from calibration data, per Section 12.

11.4.2.3 Repeat the automated sequence with the second column.

11.4.2.4 Determine the extent of breakthrough of organic halides from the first column to the second column, as described in Section 12.

11.4.3 The two columns that are used for the method blank must be combusted separately, as is done for samples. 11.5 Duplicate sample analysis: All samples to be reported for regulatory compliance purposes must be analyzed in duplicate. This requirement applies to both the batch and column adsorption procedures. In addition, if it is necessary to dilute the sample for the purposes of reducing breakthrough or maintaining the concentration within the calibration range, a more or less dilute sample must be analyzed. The adsorption volumes used for analysis of undiluted samples, diluted samples, and all replicates must be the same as the volume used for QC tests and calibration (Sections 9 and 10).

11.5.1 Using results from analysis of one sample volume (Section 11.4) and the procedure in Section 11.1.2, determine if the dilution used was within the calibration range of the instrument and/or if breakthrough exceeded the specification in Section 12.3.1. If the breakthrough criterion was exceeded or the sample was not within the calibration range, adjust the dilution volume as needed. If the breakthrough criterion was not exceeded and the sample dilution was within the calibration range, a second volume at the same dilution level may be used.

11.5.2 Adsorb the sample using the same technique (batch or column) used for the first sample volume. Combust the GAC from the second volume as described in Section 11.4, and calculate the results as described in Section 12. Compare the results of the two analyses as described in Section 12.4.

11.5.3 Duplicate analyses are not required for method blanks, as different dilution levels are not possible.

11.5.4 Duplicate analyses of the PAR standard used for calibration verification (Section 9.10) are not required.

12.0 Data Analysis and Calculations

12.1 Batch Adsorption Method: Calculate the blank-subtracted concentration of adsorbable organic halide detected in each sample (in micrograms of chloride per liter) using the following equation:

$$\mathrm{AOX}(\mu\mathrm{g/L}) = \frac{(C - B)}{V}$$

Where:

C=µg Cl^- from micro-coulometer for the sample

B=µg Cl^- from micro-coulometer for the reagent water blank (Section 9.4.1)

V = volume of sample in liters

This calculation is performed for each of the two dilution levels analyzed for each sample.

12.2 Column Adsorption Method: Calculate the blank-subtracted concentration of adsorbable organic halide detected in each sample (in micrograms of chloride per liter) using the following equation:

$$\mathrm{AOX}(\mu\mathrm{g/L}) = \frac{\left[(C_1 + C_2) - (B_1 + B_2)\right]}{V}$$

Where:

C_1=µg $C1^-$ from micro-coulometer for first column from the sample

C_2=µg $C1^-$ from micro-coulometer for second column from the sample

B_1=µg from micro-coulometer for first column from the reagent water blank (Section 9.4.1)

B_2=µg $C1^-$ from micro-coulometer for second column from the reagent water blank (Section 9.4.1)

V=volume of sample in liters

12.3 Percent breakthrough: For each sample analyzed by the column method, calculate the percent breakthrough of halide from the first column to the second column, using the following equation:

$$\%\,\mathrm{Breakthrough} = \frac{(C_2 - B_2)(100)}{\left[(C_1 - B_1) + (C_2 - B_2)\right]}$$

12.3.1 For samples to be reported for regulatory compliance purposes, the percent breakthrough must be less than or equal to 25% for both of the two analyses performed on each sample (see Section 11.5).

12.3.2 If the breakthrough exceeds 25%, dilute the affected sample further, maintaining the amount of halide at least three times higher than the level of blank, and reanalyze the sample. Ensure that the sample is also analyzed at a second level of dilution that is at least a factor of 2 different (and still higher than three times the blank).

12.4 Relative percent difference (RPD): Calculate the relative percent difference between the results of the two analyses of each sample, using the following equation:

$$\mathrm{RPD} = \frac{200\left|(\mathrm{AOX}_1 - \mathrm{AOX}_2)\right|}{\left[(\mathrm{AOX}_1 + \mathrm{AOX}_2)\right]}$$

12.5 High concentrations of AOX: If the amount of halide from either analysis exceeds the calibration range, dilute the sample and reanalyze, maintaining at least a factor of 2 difference in the dilution levels of the two portions of the sample used.

12.6 Low concentrations of AOX: The blank-subtracted final result from the batch procedure or the sum of the blank-subtracted results from the two carbon columns should be significantly above the level of the blank.

12.6.1 If the instrument response for a sample exceeds the instrument response for the blank by a factor of at least 3, the result is acceptable.

12.6.2 If the instrument response for a sample is less than three times the instrument response for the blank, and the sample has been diluted, analyze a less dilute aliquot of sample.

12.6.3 If the instrument response of an undiluted sample containing AOX above the minimum level is less than three times the instrument response for the blank, the result is suspect and may not be used for regulatory compliance purposes. In this case, find the cause of contamination, correct the problem, and reanalyze the sample under the corrected conditions.

12.7 Report results that meet all of the specifications in this method as the mean of the blank-subtracted values from Section 12.1 or 12.2 for the two analyses at different dilution levels, in µg/L of Cl^- (not as 2,4,6-trichlorophenol), to three significant figures. Report the RPD of the two analyses. For samples analyzed by the column procedure, also report the percent breakthrough.

13.0 Method Performance

The specifications contained in this method are based on data from a single laboratory and from a large-scale study of the pulp and paper industry.

14.0 Pollution Prevention

14.1 The solvents used in this method pose little threat to the environment when recycled and managed properly.

14.2 Standards should be prepared in volumes consistent with laboratory use to minimize the volume of expired standards to be disposed.

15.0 Waste Management

15.1 It is the laboratory's responsibility to comply with all federal, state, and local regulations governing waste management, particularly the hazardous waste identification rules and land disposal restrictions, and to protect the air, water, and land by minimizing and controlling all releases from fume hoods and bench operations. Compliance with all sewage discharge permits and regulations is also required.

15.2 Samples preserved with HCl or H_2SO_4 to pH <2 are hazardous and must be neutralized before being disposed, or must be handled as hazardous waste. Acetic acid and silver acetate solutions resulting from cell flushing must be disposed of in accordance with all applicable federal, state, and local regulations.

15.3 For further information on waste management, consult ''The Waste Management Manual for Laboratory Personnel,'' and ''Less is Better: Laboratory Chemical Management for Waste Reduction,'' both available from the American Chemical Society's Department of Government Relations and Science Policy, 1155 16th Street N.W., Washington, D.C. 20036.

16.0 References

16.1 ''Total Organic Halide, Methods 450.1—Interim,'' Prepared by Stephen Billets and James J. Lichtenberg, USEPA, Office of Research and Development, Physical and Chemical Methods Branch, EMSL-Cincinnati, Cincinnati, OH 45268, EPA 600/4–81–056 (1981).

16.2 Method 9020, USEPA Office of Solid Waste, ''Test Methods for Evaluating Solid Waste, SW–846,'' Third Edition, 1987.

16.3 ''Determination of Adsorbable Organic Halogens (AOX),'' ''German Standard Methods for the Analysis of Water, Waste Water and Sludge—General Parameters of Effects and Substances,'' Deutsche Industrie Norm (DIN) Method 38 409, Part 14, DIN German Standards Institute, Beuth Verlag, Berlin, Germany (1987).

16.4 ''Water Quality: Determination of Adsorbable Organic Halogens (AOX),'' International Organization for Standard/Draft International Standardization (ISO/DIS) Method 9562 (1988).

16.5 ''Organically Bound Chlorine by the AOX Method,'' SCAN–W 9:89, Secretariat, Scandinavian Pulp, Paper and Board Testing Committee, Box 5604, S–11486, Stockholm, Sweden (1989).

16.6 Method 5320, ''Dissolved Organic Halogen,'' from ''Standard Methods for the Examination of Water and Wastewater,'' 5320, American Public Health Association, 1015 15th St. NW, Washington, DC 20005 (1989).

16.7 ''Canadian Standard Method for the Determination of Adsorbable Organic Halides (AOX) in Waters and Wastewaters,'' Environment Canada and The Canadian Pulp and Paper Association (1990).

16.8 40 CFR Part 136, Appendix B.

16.9 ''Working with Carcinogens,'' DHEW, PHS, CDC, NIOSH, Publication 77–206, (Aug 1977).

16.10 ''OSHA Safety and Health Standards, General Industry'' OSHA 2206, 29 CFR 1910 (Jan 1976).

16.11 ''Safety in Academic Chemistry Laboratories,'' ACS Committee on Chemical Safety (1979).

16.12 ''Methods 330.4 and 330.5 for Total Residual Chlorine,'' USEPA, EMSL-Cincinnati, Cincinnati, OH 45268, EPA–4–79–020 (March 1979).

16.13 ''Validation of Method 1650: Determination of Organic Halide,'' Analytical Technologies Inc., ERCE Contract 87–3410, November 15, 1990. Available from the EPA Sample Control Center, DynCorp, 300 N. Lee St., Alexandria, VA 22314 (703–519–1140).

17.0 Figures

BILLING CODE 6560–50–P

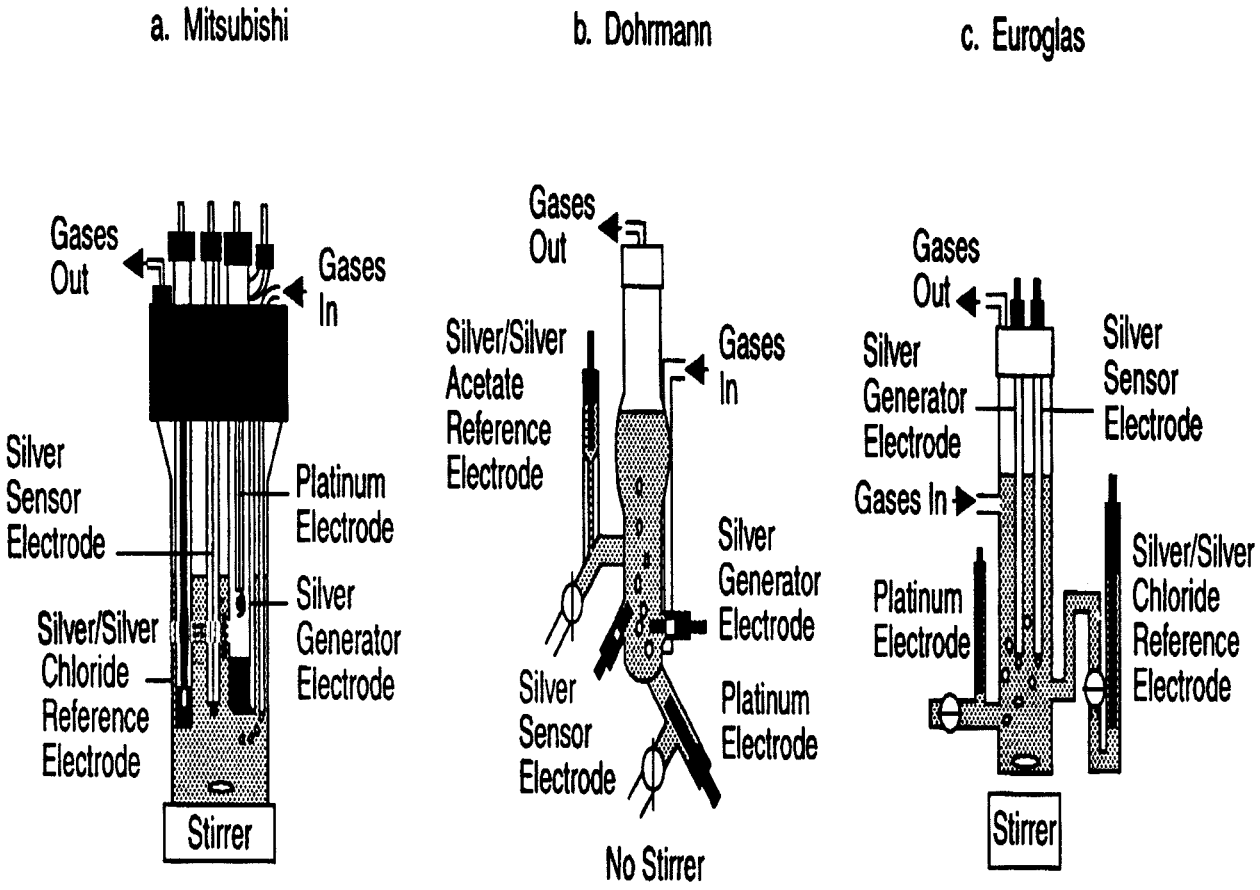

Figure 1. Microcoulometric Titration Cells (from Reference 7)

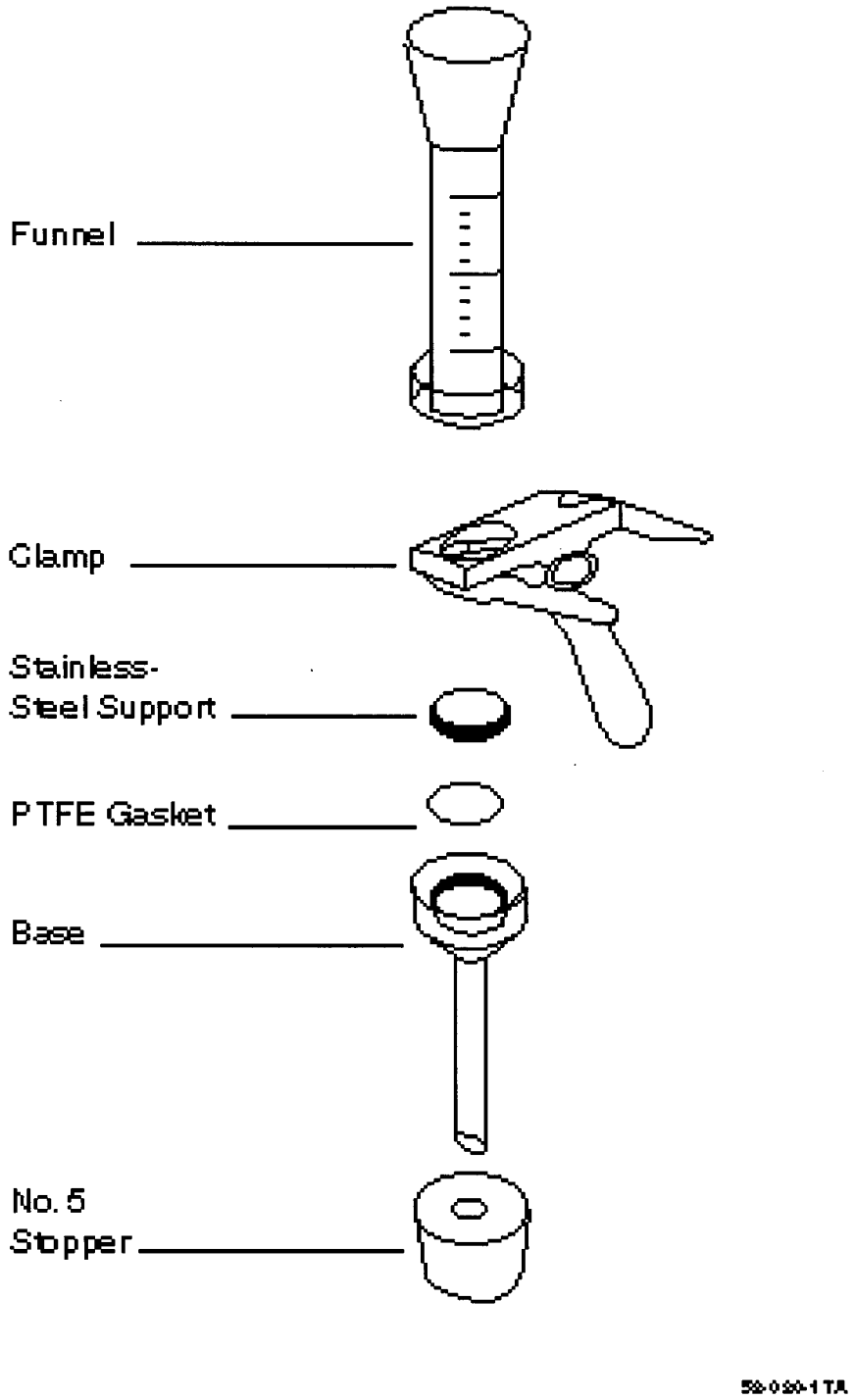

Figure 2. Filter Apparatus

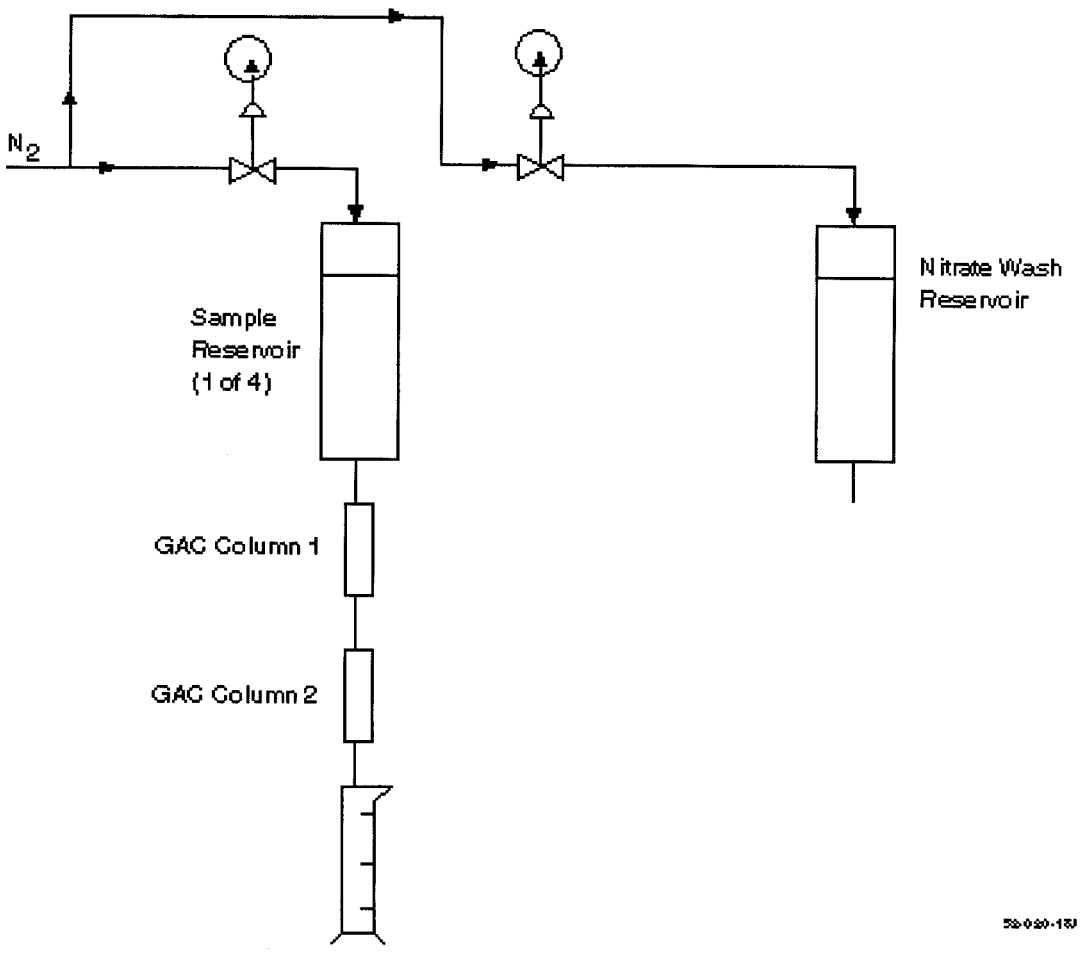

Figure3. Schematic of the Column Adsorption System

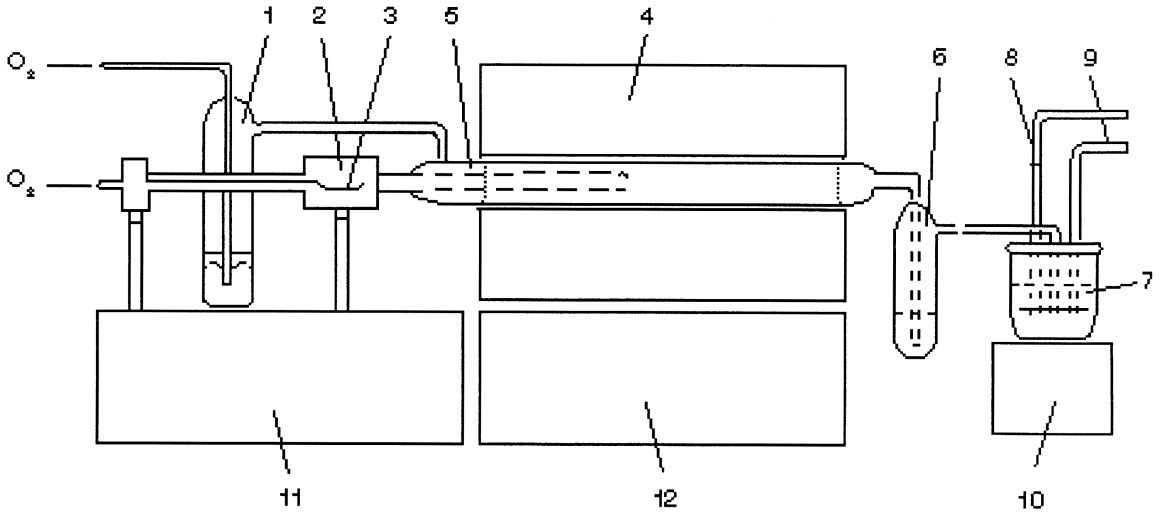

1. Stripping Device
2. Sample inlet for AOX
3. AOX Sample
4. Furnace
5. Combustion Tube
6. Absorber filled with H_2SO_4
7. Titration cell
8. Working electrodes
9. Measuring electrodes
10. Stirrer
11. Titration micro-processor
12. Gas flow and temperature control device

Figure 4. Schematic of an AOX Apparatus

BILLING CODE 6560–50–C

18.0 Glossary of Definitions and Purposes

These definitions and purposes are specific to this method but have been conformed to common usage as much as possible.

18.1 Units of weight and measure and their abbreviations.

18.1.1 Symbols.

°C degrees Celsius
µg microgram
µL microliter
< less than
> greater than
% percent

18.1.2 Alphabetical characters.

cm centimeter
g gram
h hour
ID inside diameter
in inch
L liter
m meter
mg milligram
min minute
mL milliliter
mm millimeter
N normal; gram molecular weight of solute divided by hydrogen equivalent of solute, per liter of solution
OD outside diameter
ppb part-per-billion
ppm part-per-million
ppt part-per-trillion
psig pounds-per-square inch gauge
v/v volume per unit volume
w/v weight per unit volume

18.2 Definitions and acronyms (in alphabetical order).

Analyte: AOX tested for by this method.

Calibration standard (CAL): A solution prepared from a secondary standard and/or stock solution which is used to calibrate the response of the instrument with respect to analyte concentration.

Calibration verification standard (VER): The mid-point calibration standard (CS3) that is used to verify calibration.

Field blank: An aliquot of reagent water or other reference matrix that is placed in a sample container in the laboratory or the field, and treated as a sample in all respects, including exposure to sampling site conditions, storage, preservation, and all analytical procedures. The purpose of the field blank is to determine if the field or sample transporting procedures and environments have contaminated the sample.

IPR: Initial precision and recovery; four aliquots of the diluted PAR standard analyzed to establish the ability to generate acceptable precision and accuracy. An IPR is performed prior to the first time this method is used and any time the method or instrumentation is modified.

Laboratory blank: See Method blank.

Laboratory control sample (LCS): See Ongoing precision and recovery sample (OPR).

Laboratory reagent blank: See Method blank.

May: This action, activity, or procedural step is neither required nor prohibited.

May not: This action, activity, or procedural step is prohibited.

Method blank: An aliquot of reagent water that is treated exactly as a sample including exposure to all glassware, equipment, solvents, reagents, internal standards, and surrogates that are used with samples. The method blank is used to determine if analytes or interferences are present in the laboratory environment, the reagents, or the apparatus.

Minimum level (ML): The level at which the entire analytical system must give a recognizable signal and acceptable calibration point for the analyte. It is equivalent to the concentration of the lowest calibration standard, assuming that all method-specified sample weights, volumes, and cleanup procedures have been employed.

Must: This action, activity, or procedural step is required.

OPR: Ongoing precision and recovery standard; a laboratory blank spiked with a known quantity of analyte. The OPR is analyzed exactly like a sample. Its purpose is to assure that the results produced by the laboratory remain within the limits specified in this method for precision and recovery.

PAR: Precision and recovery standard; secondary standard that is diluted and spiked to form the IPR and OPR.

Preparation blank: See Method blank.

Primary dilution standard: A solution containing the specified analytes that is purchased or prepared from stock solutions and diluted as needed to prepare calibration solutions and other solutions.

Quality control check sample (QCS): A sample containing all or a subset of the analytes at known concentrations. The QCS is obtained from a source external to the laboratory or is prepared from a source of standards different from the source of calibration standards. It is used to check laboratory performance with test materials prepared external to the normal preparation process.

Reagent water: Water demonstrated to be free from the analyte of interest and potentially interfering substances at the method detection limit for the analyte.

Relative standard deviation (RSD): The standard deviation multiplied by 100, divided by the mean.

RSD: See Relative standard deviation.

Should: This action, activity, or procedural step is suggested but not required.

Stock solution: A solution containing an analyte that is prepared using a reference material traceable to EPA, the National Institute of Science and Technology (NIST), or a source that will attest to the purity and authenticity of the reference material.

VER: See Calibration verification standard.

Method 1653—Chlorinated Phenolics in Wastewater by In Situ Acetylation and GCMS

1.0 Scope and Application

1.1 This method is for determination of chlorinated phenolics (chlorinated phenols, guaiacols, catechols, vanillins, syringaldehydes) and other compounds associated with the Clean Water Act; the Resource Conservation and Recovery Act; and the Comprehensive Environmental Response, Compensation, and Liability Act; and that are amenable to in situ acetylation, extraction, and analysis by capillary column gas chromatography/mass spectrometry (GCMS). This method is based on existing methods for determination of chlorophenolics in pulp and paper industry wastewaters (References 1 and 2).

1.2 The chemical compounds listed in Table 1 may be determined in waters and, specifically, in in-process streams and wastewaters associated with the pulp and paper industry. The method is designed to meet the survey and monitoring requirements of the Environmental Protection Agency (EPA).

1.3 The detection limit of this method is usually dependent on the level of interferences rather than instrumental limitations. The method detection limits (MDLs) in Table 2 typify the minimum quantity that can be detected with no interferences present.

1.4 The GCMS portions of this method are for use only by persons experienced with GCMS or under the close supervision of such qualified persons. Laboratories unfamiliar with analyses of environmental samples by GCMS should run the performance tests in Reference 3 before beginning.

1.5 Any modification of the method beyond those expressly permitted is subject to the application and approval of alternative test procedures under 40 CFR Parts 136.4 and 136.5.

2.0 Summary of Method

2.1 A 1000-mL aliquot of water is spiked with stable isotopically labeled analogs of the compounds of interest and an internal standard. The solution is adjusted to neutral pH, potassium carbonate buffer is added, and the pH is raised to 9–11.5. The chlorophenolics are converted in situ to acetates by the addition of acetic anhydride. After acetylation, the solution is extracted with hexane. The hexane is concentrated to a final volume of 0.5 mL, an instrument internal standard is added, and an aliquot of the concentrated extract is injected into the gas chromatograph (GC). The compounds are separated by GC and detected by a mass spectrometer (MS). The labeled compounds and internal standard serve to correct the variability of the analytical technique.

2.2 Identification of a pollutant (qualitative analysis) is performed by comparing the relative retention time and mass spectrum to that of an authentic standard. A compound is identified when its relative retention time and mass spectrum agree.

2.3 Quantitative analysis is performed in one of two ways by GCMS using extracted ion-current profile (EICP) areas: (1) For those compounds listed in Table 1 for which standards and labeled analogs are available, the GCMS system is calibrated and the compound concentration is determined using an isotope dilution technique; (2) for those compounds listed in Table 1 for which authentic standards but no labeled compounds are available, the GCMS system is calibrated and the compound concentration is determined using an internal standard technique.

2.4 Quality is assured through reproducible calibration and testing of the extraction and GCMS systems.

3.0 Definitions

3.1 Chlorinated phenolics are the chlorinated phenols, guaiacols, catechols, vanillins, syringaldehydes and other compounds amenable to in situ acetylation, extraction, and determination by GCMS using this method.

3.2 Definitions for other terms used in this method are given in the glossary at the end of the method (Section 20.0).

4.0 Interferences

4.1 Solvents, reagents, glassware, and other sample processing hardware may yield artifacts and/or elevated baselines, causing misinterpretation of chromatograms and spectra. All materials used in the analysis shall be demonstrated to be free from interferences under the conditions of analysis by running method blanks initially and with each sample batch (samples started through the extraction process on a given eight-hour shift, to a maximum of 20). Specific selection of reagents and purification of solvents by distillation in all-glass systems may be required. Glassware and, where possible, reagents are cleaned by using solvent rinse and baking at 450 °C for a minimum of one hour.

4.2 Interferences co-extracted from samples will vary considerably from source to source, depending on the diversity of the site being sampled. Industry experience suggests that high levels of non-chlorinated phenols may cause poor recovery of the compounds of interest, particularly in samples collected in the vicinity of a source of creosote, such as a wood-preserving plant (Reference 1).

4.3 The internal standard, 3,4,5-trichlorophenol, has been reported to be an anaerobic degradation product of 2,3,4,5-tetrachlorophenol and/or pentachlorophenol (Reference 1). When an interference with this or another compound occurs, labeled pentachlorophenol or another labeled compound may be used as an alternative internal standard; otherwise, the internal standards and reference compounds must be used as specified in this method.

4.4 Blank contamination by pentachlorophenol has been reported (Reference 1) to be traceable to potassium carbonate; it has also been reported that this contamination may be removed by baking overnight at 400 to 500 °C.

4.5 Catechols are susceptible to degradation by active sites on injection port liners and columns, and are subject to oxidation to the corresponding chloro-o-benzoquinones (Reference 2). A small amount of ascorbic acid may be added to samples to prevent auto-oxidation (Reference 2; also see Section 11.1.6). For pulp and paper industry samples, ascorbic acid may be added to treated effluent samples only.

5.0 Safety

5.1 The toxicity or carcinogenicity of each compound or reagent used in this method has not been precisely determined; however, each chemical compound should be treated as a potential health hazard. Exposure to these compounds should be reduced to the lowest possible level. The laboratory is responsible for maintaining a current awareness file of OSHA regulations regarding the safe handling of the chemicals specified in this method. A reference file of materials safety data sheets (MSDSs) should be made available to all personnel involved in these analyses. Additional information on laboratory safety can be found in References 4 through 6.

5.2 Samples may contain high concentrations of toxic compounds, and should be handled with gloves and a hood opened to prevent exposure.

6.0 Equipment and Supplies

Note: Brand names, suppliers, and part numbers are for illustrative purposes only. No endorsement is implied. Equivalent performance may be achieved using apparatus and materials other than those specified here, but demonstration of equivalent performance that meets the requirements of this method is the responsibility of the laboratory.

6.1 Sampling equipment for discrete or composite sampling.

6.1.1 Sample bottles and caps.

6.1.1.1 Sample bottle: Amber glass, 1000-mL minimum, with screw-cap. If amber bottles are not available, samples shall be protected from light.

6.1.1.2 Bottle caps: Threaded to fit sample bottles. Caps shall be lined with PTFE.

6.1.1.3 Cleaning bottles: Detergent water wash, cap with aluminum foil, and bake at 450°C for a minimum of one hour before use.

6.1.1.4 Cleaning liners: Detergent water wash, reagent water (Section 7.4) and solvent rinse, and bake at approximately 200°C for a minimum of 1 hour prior to use.

6.1.1.5 Bottles and liners must be lot-certified to be free of chlorophenolics by running blanks according to this method. If blanks from bottles and/or liners without cleaning or with fewer cleaning steps show no detectable chlorophenolics, the bottle and liner cleaning steps that do not eliminate chlorophenolics may be omitted.

6.1.2 Compositing equipment: Automatic or manual compositing system incorporating glass containers cleaned per bottle cleaning procedure above. Sample containers are kept at 0 to 4 °C during sampling. Glass or PTFE tubing only shall be used. If the sampler uses a peristaltic pump, a minimum length of compressible silicone rubber tubing may be used in the pump only. Before use, the tubing shall be thoroughly rinsed with methanol, followed by repeated rinsing with reagent water (Section 7.4) to minimize sample contamination. An integrating flow meter is used to collect proportional composite samples.

6.2 Extraction apparatus.

6.2.1 Bottle or beaker: 1500-to 2000-mL capacity.

6.2.2 Separatory funnel: 500-to 2000-mL, glass, with PTFE stopcock.

6.2.3 Magnetic stirrer: Corning Model 320, or equivalent, with stirring bar.

6.3 Polyethylene gloves: For handling samples and extraction equipment (Fisher 11–394–110–B, or equivalent).

6.4 Graduated cylinders: 1000-mL, 100-mL, and 10-mL nominal.

6.5 Centrifuge: Capable of accepting 50-mL centrifuge tubes and achieving 3000 RPM.

6.5.1 Centrifuge tubes.

6.5.1.1 35-mL nominal, with PTFE-lined screw-cap.

6.5.1.2 15-mL nominal, conical graduated, with ground-glass stopper.

6.6 Concentration apparatus.

6.6.1 Kuderna-Danish (K–D) concentrator tube: 10-mL, graduated (Kontes K–570050–1025, or equivalent) with calibration verified. Ground-glass stopper (size 19/22 joint) is used to prevent evaporation of extracts.

6.6.2 Kuderna-Danish (K–D) evaporation flask: 1000-mL (Kontes K–570001–1000, or equivalent), attached to concentrator tube with springs (Kontes K–662750–0012).

6.6.3 Snyder column: Three-ball macro (Kontes K–503000–0232, or equivalent).

6.6.4 Snyder column: Two-ball micro (Kontes K–469002–0219, or equivalent).

6.6.5 Boiling chips: Approximately 10/40 mesh, extracted with methylene chloride and baked at 450 °C for a minimum of one hour.

6.6.6 Nitrogen evaporation apparatus: Equipped with a water bath controlled at 35 to 40 °C (N-Evap, Organomation Associates, Inc., South Berlin, MA, or equivalent), installed in a fume hood. This device may be used in place of the micro-Snyder column concentrator in Section 6.6.4 above.

6.7 Water bath: Heated, with concentric ring cover, capable of temperature control (± 2 °C), installed in a fume hood.

6.8 Sample vials: Amber glass, 1- to 3-mL, with PTFE-lined screw-cap.

6.9 Balances.

6.9.1 Analytical: Capable of weighing 0.1 mg.

6.9.2 Top loading: Capable of weighing 10 mg.

6.10 pH meter.

6.11 Gas chromatograph: Shall have splitless or on-column injection port for capillary column, temperature program with 50°C hold, and shall meet all of the performance specifications in Section 9.

6.12 Gas chromatographic column: 30 m (±5 m) × 0.25 mm (±0.02 mm) I.D. × 0.25 micron, 5% phenyl, 94% methyl, 1% vinyl silicone bonded-phase fused-silica capillary column (J & W DB–5, or equivalent).

6.13 Mass spectrometer: 70 eV electron impact ionization, shall repetitively scan from 42 to 450 amu in 0.95 to 1.00 second, and shall produce a unit resolution (valleys between m/z 441–442 less than 10% of the height of the 441 peak), background-corrected mass spectrum from 50 ng decafluorotriphenylphosphine (DFTPP) introduced through the GC inlet. The spectrum shall meet the mass-intensity criteria in Table 3 (Reference 7). The mass spectrometer shall be interfaced to the GC such that the end of the capillary column terminates within 1 cm of the ion source, but does not intercept the electron or ion beams. All portions of the column which connect the GC to the ion source shall remain at or above the column temperature during analysis to preclude condensation of less volatile compounds.

6.14 Data system: Shall collect and record MS data, store mass-intensity data in spectral

libraries, process GCMS data, generate reports, and compute and record response factors.

6.14.1 Data acquisition: Mass spectra shall be collected continuously throughout the analysis and stored on a mass storage device.

6.14.2 Mass spectral libraries: User-created libraries containing mass spectra obtained from analysis of authentic standards shall be employed to reverse search GCMS runs for the compounds of interest (Section 10.2).

6.14.3 Data processing: The data system shall be used to search, locate, identify, and quantify the compounds of interest in each GCMS analysis. Software routines shall be employed to compute retention times, and to compute peak areas at the m/z's specified (Table 4). Displays of spectra, mass chromatograms, and library comparisons are required to verify results.

6.14.4 Response factors and multi-point calibrations: The data system shall be used to record and maintain lists of response factors (response ratios for isotope dilution) and multi-point calibration curves (Section 10). Computations of relative standard deviation (coefficient of variation) are used for testing calibration linearity. Statistics on initial (Section 9.3.2) and ongoing (Section 9.6) performance shall be computed and maintained.

7.0 Reagents and Standards

7.1 Reagents for adjusting sample pH.

7.1.1 Sodium hydroxide: Reagent grade, 6 N in reagent water.

7.1.2 Sulfuric acid: Reagent grade, 6 N in reagent water.

7.2 Reagents for sample preservation.

7.2.1 Sodium thiosulfate ($Na_2S_2O_3$) solution (1 N): Weigh 79 g $Na_2S_2O_3$ in a 1–L volumetric flask and dilute to the mark with reagent water.

7.2.2 Ascorbic acid solution: Prepare a solution of ascorbic acid in reagent water at a concentration of 0.1 g/mL. This solution must be prepared fresh on each day when derivatizations will be performed. Therefore, do not prepare more than will be used that day. (A 50-mL volume is sufficient for ten analyses).

7.3 Solvents: Hexane, acetone, and methanol. Distilled in glass (Burdick and Jackson, or equivalent).

7.4 Reagent water: Water in which the compounds of interest and interfering compounds are not detected by this method.

7.5 Reagents for derivatization.

7.5.1 Potassium carbonate (K_2CO_3).

7.5.1.1 Purification: Spread in a shallow baking dish, heat overnight at 400 to 500°C.

7.5.1.2 Solution: Dissolve 150 g purified K_2CO_3 in 250 mL reagent water.

7.5.2 Acetic anhydride: Redistilled reagent grade.

7.6 Analytical standards.

7.6.1 Derivatization: Because the chlorinated phenolics are determined as their acetate derivatives after in situ acetylation, the method requires that the calibration standards be prepared by spiking the underivatized materials into reagent water and carrying the spiked reagent water aliquot through the entire derivatization and extraction procedure that is applied to the field samples.

7.6.2 Standard solutions: Purchased as solutions or mixtures with certification to their purity, concentration, and authenticity, or prepared from materials of known purity and composition. If chemical purity of a compound is 98% or greater, the weight may be used without correction to compute the concentration of the standard. When not being used, standards are stored in the dark at −20 to −10 °C in screw-capped vials with PTFE-lined lids. A mark is placed on the vial at the level of the solution so that solvent evaporation loss can be detected. The vials are brought to room temperature prior to use.

7.6.3 If the chemical purity of any standard does not meet the 98% requirement above, the laboratory must correct all calculations, calibrations, etc., for the difference in purity.

7.7 Preparation of stock solutions: Prepare chlorovanillins and chlorosyringaldehydes in acetone, as these compounds are subject to degradation in methanol. Prepare the remaining chlorophenolics in methanol. Prepare all standards per the steps below. Observe the safety precautions in Section 5.

7.7.1 Dissolve an appropriate amount of assayed reference material in a suitable solvent. For example, weigh 50 mg (±0.1 mg) of pentachlorophenol in a 10-mL ground-glass-stoppered volumetric flask and fill to the mark with methanol. After the pentachlorophenol is completely dissolved, transfer the solution to a 15-mL vial with PTFE-lined cap.

7.7.2 Stock solutions should be checked for signs of degradation prior to the preparation of calibration or performance test standards and shall be replaced after six months, or sooner if comparison with quality control check standards indicates a change in concentration.

7.8 Labeled compound spiking solution: From stock solutions prepared as above, or from mixtures, prepare one spiking solution to contain the labeled chlorovanillin in acetone and a second spiking solution to contain the remaining chlorophenolics, including the 3,4,5-trichlorophenol sample matrix internal standard (SMIS), in methanol. The labeled compounds and SMIS are each at a concentration of 12.5 µg/mL.

7.9 Secondary standards for calibration: Using stock solutions (Section 7.7), prepare one secondary standard containing the chlorovanillins and chlorsyringaldehydes listed in Table 1 in acetone and a second secondary standard containing the remaining chlorophenolics in methanol. The monochlorinated phenol, guaiacol, and catechol are included at a concentration of 25 µg/mL; the trichlorinated catechols, tetrachlorinated guaiacol and catechol, pentachlorophenol, 5,6-dichlorovanillin, and 2,6-dichlorosyringaldehyde are included at a concentration of 100 µg/mL; and the remaining compounds are included at a concentration of 50 µg/mL, each in their respective solutions.

7.10 Instrument internal standard (IIS): Prepare a solution of 2,2′-difluorobiphenyl (DFB) at a concentration of 2.5 mg/mL in hexane.

7.11 DFTPP solution: Prepare a solution of DFTPP at 50 µg/mL in acetone.

7.12 Solutions for obtaining authentic mass spectra (Section 10.2): Prepare mixtures of compounds at concentrations which will assure authentic spectra are obtained for storage in libraries.

7.13 Preparation of calibration solutions.

7.13.1 Into five 1000-mL aliquots of reagent water, spike 50, 100, 200, 500 and 1000 µL of each of the two solutions in Section 7.9. Spike 1.00 mL of each of the two labeled compound spiking solutions (Section 7.8) into each of the five aliquots.

7.13.2 Using the procedure in Section 11, derivatize and extract each solution, and concentrate the extract to a final volume of 0.50 mL. This will produce calibration solutions of nominal 5, 10, 20, 50, and 100 µg/mL of the native chlorophenolics and a constant concentration of 25 µg/mL of each labeled compound and the SMIS (assuming 100% derivatization and recovery). As noted in Section 11.1.6, ascorbic acid is added to all samples of final effluents to stabilize chlorocatechols, but is not added to samples of pulp and paper in-process wastewaters. Therefore, it is necessary to prepare separate sets of five initial calibration standards with and without the addition of ascorbic acid. Also, in the event that the laboratory is extracting final effluent samples by both the stir-bar and separatory funnel procedures (see Section 11.3), initial calibration standards should be prepared by both methods.

7.13.3 These solutions permit the relative response (labeled to unlabeled) and the response factor to be measured as a function of concentration (Sections 10.4 and 10.5).

7.13.4 The nominal 50 µg/mL standard may also be used as a calibration verification standard (see Section 9.6).

7.14 Ongoing precision and recovery (OPR) standard: Used for determination of initial (Section 9.3.2) and ongoing (Section 9.6) precision and recovery. This solution is prepared by spiking 500 µL of each the two solutions of the secondary calibration standards (Section 7.9) and 1 mL of each of the two labeled compound spiking solutions (Section 7.8) into 1000 mL of reagent water.

7.15 Stability of solutions: All standard solutions (Sections 7.7 through 7.14) shall be analyzed within 48 hours of preparation and on a monthly basis thereafter for signs of degradation. Standards will remain acceptable if the peak area at the quantitation m/z relative to the DFB internal standard remains within ±15% of the area obtained in the initial analysis of the standard.

8.0 Sample Collection, Preservation, and Storage

8.1 Collect samples in glass containers (Section 6.1) following conventional sampling practices (Reference 9). Aqueous samples are collected in refrigerated bottles using automatic sampling equipment.

8.2 Sample preservation.

8.2.1 Residual chlorine: If the sample contains residual chlorine, the chlorine must be reduced to eliminate positive interference resulting from continued chlorination reactions. Immediately after sampling, test for residual chlorine using the following

method or an alternative EPA method (Reference 10).

8.2.1.1 Dissolve a few crystals of potassium iodide in the sample and add three to five drops of a 1% starch solution. A blue color indicates the presence of residual chlorine.

8.2.1.2 If residual chlorine is found, add 1 mL of sodium thiosulfate solution (Section 7.2.1) for each 2.5 ppm of free chlorine or until the blue color disappears.

8.2.2 Acidification: Adjust pH of all aqueous samples to <2 with sulfuric acid (Section 7.1.2). Failure to acidify samples may result in positive interferences from continued chlorination reactions.

8.2.3 Refrigeration: Maintain sample temperature at 0 to 4 °C from time of collection until extraction, and maintain extracts at a temperature of 0 to 4° C from time of extraction until analysis.

8.3 Collect a minimum of 2000 mL of sample. This will provide a sufficient amount for all testing. Smaller amounts may be collected if the stream is known to contain high levels of chlorophenolics.

8.4 All samples must be acetylated and extracted within 30 days of collection, and must be analyzed within 30 days of acetylation. If labeled compound recoveries for a sample do not meet the acceptance criteria in Table 5 and the 30-day holding time is not met, a new sample must be collected.

9.0 Quality Control

9.1 Each laboratory that uses this method is required to operate a formal quality assurance program (Reference 8). The minimum requirements of this program consist of an initial demonstration of laboratory capability, analysis of samples spiked with labeled compounds to evaluate and document data quality, and analysis of standards and blanks as tests of continued performance. Laboratory performance is compared to established performance criteria to determine if the results of analyses meet the performance characteristics of the method.

9.1.1 DFTPP spectrum validity shall be checked at the beginning of each eight-hour shift during which analyses are performed. This test is described in Section 9.2.

9.1.2 The laboratory shall make an initial demonstration of the ability to generate acceptable results with this method. This ability is established as described in Section 9.3.

9.1.3 The laboratory is permitted to modify this method to improve separations or lower the costs of measurements, provided all performance specifications are met. Each time a modification is made to the method, the laboratory is required to repeat the procedures in Sections 10.3 and 9.3.2 to demonstrate method performance. If the detection limits for the analytes in this method will be affected by the modification, the laboratory should demonstrate that each MDL (40 CFR 136, Appendix B) is less than or equal to the MDL in this method or one-third the regulatory compliance level, whichever is higher.

9.1.4 The laboratory shall spike all samples with labeled compounds and the sample matrix internal standard (SMIS) to monitor method performance. This test is described in Section 9.4. When results of these spikes indicate atypical method performance for samples, the samples are diluted to bring method performance within acceptable limits (Section 13).

9.1.5 Analyses of blanks are required to demonstrate freedom from contamination. The procedures and criteria for analysis of a blank are described in Section 9.5.

9.1.6 The laboratory shall, on an ongoing basis, demonstrate through analysis of the ongoing precision and recovery standard (Section 7.14) that the analysis system is in control. These procedures are described in Section 9.6.

9.1.7 The laboratory shall maintain records to define the quality of data that is generated. Development of accuracy statements is described in Section 9.4.4 and 9.6.3.

9.2 DFTPP spectrum validity: Inject 1 µL of the DFTPP solution (Section 7.11) either separately or within a few seconds of injection of the OPR standard (Section 9.6) analyzed at the beginning of each shift. The criteria in Table 3 shall be met.

9.3 Initial demonstration of laboratory capability.

9.3.1 Method Detection Limit (MDL): To establish the ability to detect the analytes in this method, the laboratory should determine the MDL per the procedure in 40 CFR 136, Appendix B using the apparatus, reagents, and standards that will be used in the practice of this method. MDLs less than or equal to the MDLs in Table 2 should be achieved prior to the practice of this method.

9.3.2 Initial precision and recovery (IPR): To establish the ability to demonstrate control over the analysis system and to generate acceptable precision and accuracy, the laboratory shall perform the following operations:

9.3.2.1 Derivatize, extract, concentrate, and analyze four 1000-mL aliquots of the ongoing precision and recovery standard (OPR; Section 7.14), according to the procedure in Section 11. Separate sets of IPR aliquots must be prepared with the addition of ascorbic acid and without.

9.3.2.2 Using results of the four analyses, compute the average percent recovery (X) and the relative standard deviation of the recovery (s) for each compound, by isotope dilution for pollutants with a labeled analog, and by internal standard for pollutants with no labeled analog and for the labeled compounds and the SMIS.

9.3.2.3 For each compound, compare s and X with the corresponding limits for initial precision and recovery in Table 5. If s and X for all compounds meet the acceptance criteria, system performance is acceptable and analysis of blanks and samples may begin. If, however, any individual s exceeds the precision limit or any individual X falls outside the range for recovery, system performance is unacceptable for that compound. In this event, correct the problem and repeat the test (Section 9.3.2).

9.4 Labeled compound recovery: The laboratory shall spike all samples with labeled compounds and the sample matrix internal standard (SMIS) to assess method performance on the sample matrix.

9.4.1 Analyze each sample according to the method beginning in Section 11.

9.4.2 Compute the percent recovery (P) of the labeled compounds and the SMIS using the internal standard method (Section 14.3) with 2,2'-difluorobiphenyl as the reference compound.

9.4.3 Compare the labeled compound and SMIS recovery for each compound with the corresponding limits in Table 5. If the recovery of any compound falls outside its warning limit, method performance is unacceptable for that compound in that sample. Therefore, the sample is complex. The sample is diluted and reanalyzed per Section 13.

9.4.4 As part of the QA program for the laboratory, it is suggested, but not required, that method accuracy for samples be assessed and records maintained. After the analysis of five samples for which the labeled compounds pass the tests in Section 9.4.3, compute the average percent recovery (P) and the standard deviation of the percent recovery (sp) for the labeled compounds only. Express the accuracy assessment as a percent recovery interval from P − 2sp to P + 2sp for each matrix. For example, if P = 90% and sp = 10%, the accuracy interval is expressed as 70 to 110%. Update the accuracy assessment for each compound on a regular basis (e.g., after each 20 to 30 new accuracy measurements).

9.5 Blanks: Reagent water blanks are analyzed to demonstrate freedom from contamination.

9.5.1 Extract and concentrate a 1000-mL reagent water blank with each sample batch (samples started through the extraction process on the same eight-hour shift, to a maximum of 20 samples). Blanks associated with samples to which ascorbic acid is added must be prepared with ascorbic acid, and blanks associated with samples to which ascorbic acid is not added must be prepared without ascorbic acid. Analyze the blank immediately after analysis of the OPR (Section 7.14) to demonstrate freedom from contamination.

9.5.2 If any of the compounds of interest (Table 1) or any potentially interfering compound is found in an aqueous blank at greater than 5µg/L (assuming a response factor of one relative to the sample matrix internal standard for compounds not listed in Table 1), analysis of samples is halted until the source of contamination is eliminated and a blank shows no evidence of contamination at this level.

9.6 Calibration verification and ongoing precision and recovery: At the beginning of each eight-hour shift during which analyses are performed, analytical system performance is verified for all compounds. Analysis of DFTPP (Section 9.2) and the nominal 50µg/mL OPR (Section 11.1.5) is used to verify all performance criteria. Adjustment and/or recalibration, per Section 10, shall be performed until all performance criteria are met. Only after all performance criteria are met may samples and blanks be analyzed.

9.6.1 Analyze the extract of the OPR (Section 11.1.5) at the beginning of each eight-hour shift and prior to analysis of

samples from the same batch. Alternatively, a separate calibration verification may be performed using an aliquot of the midpoint calibration standard from Section 7.13 (with a nominal concentration of 50µ g/mL). This alternative may be used to check instrument performance on failure of an OPR, or when samples extracted with an OPR aliquot are not analyzed within the same eight-hour analysis shift.

9.6.1.1 Retention times: The absolute retention time of 2,2′-difluorobiphenyl shall be within the range of 765 to 885 seconds, and the relative retention times of all pollutants and labeled compounds shall fall within the limits given in Table 2.

9.6.1.2 GC resolution: The valley height between 4,6-dichloroguaiacol and 3,4-dichloroguaiacol at m/z 192 shall not exceed 10% of the height of the taller of the two peaks.

9.6.1.3 Multiple peaks: Each compound injected shall give a single, distinct GC peak.

9.6.2 Compute the percent recovery of each pollutant (Table 1) by isotope dilution (Section 10.4) for those compounds that have labeled analogs. Compute the percent recovery of each pollutant that has no labeled analog by the internal standard method (Section 10.5), using the 3,4,5-trichlorophenol (SMIS) as the internal standard. Compute the percent recovery of the labeled compounds and the SMIS by the internal standard method, using the 2,2′-difluorobiphenyl as the internal standard.

9.6.2.1 For each compound, compare the recovery with the limits for ongoing precision and recovery in Table 5. If all compounds meet the acceptance criteria, system performance is acceptable and analysis of blanks and samples may proceed. If, however, any individual recovery falls outside of the range given, system performance is unacceptable for that compound. In this event, there may be a problem with the GCMS or with the derivatization/extraction/concentration systems.

9.6.2.2 GCMS system: To determine if the failure of the OPR test (Section 9.6.2.1) is due to instrument drift, analyze the current calibration verification extract (Section 7.13.4), calculate the percent recoveries of all compounds, and compare with the OPR recovery limits in Table 5. If all compounds meet these criteria, GCMS performance/stability is verified, and the failure of the OPR analysis is attributed to problems in the derivatization/extraction/concentration of the OPR. In this case, analysis of the sample extracts may proceed. However, failure of any of the recovery criteria in the analysis of a sample extract requires rederivatization of that sample (Sections 13.3.1 and 13.3.2). If, however, the performance/stability of the GCMS is not verified by analysis of the calibration verification extract, the GCMS requires recalibration and all extracts associated with the failed OPR must be reanalyzed.

9.6.3 Add results that pass the specifications in Section 9.6.2.1 to initial and previous ongoing data for each compound. Update QC charts to form a graphic representation of continued laboratory performance. Develop a statement of laboratory accuracy for each pollutant and labeled compound in each matrix type (reagent water, C-stage filtrate, E-stage filtrate, final effluent, etc.) by calculating the average percent recovery (R) and the standard deviation of percent recovery (sr). Express the accuracy as a recovery interval from R − 2sr to R + 2sr. For example, if R = 95% and sr = 5%, the accuracy is 85 to 105%.

9.7 The specifications contained in this method can be met if the apparatus used is calibrated properly, then maintained in a calibrated state. The standards used for calibration (Section 10) and for initial (Section 9.3.2) and ongoing (Section 9.6) precision and recovery should be identical, so that the most precise results will be obtained. The GCMS instrument in particular will provide the most reproducible results if dedicated to the settings and conditions required for the analyses of chlorophenolics by this method.

9.8 Depending on specific program requirements, field replicates may be collected to determine the precision of the sampling technique, and spiked samples may be required to determine the accuracy of the analysis when the internal standard method is used.

10.0 Calibration and Standardization

10.1 Assemble the GCMS and establish the operating conditions in Section 12. Analyze standards per the procedure in Section 12 to demonstrate that the analytical system meets the minimum levels in Table 2, and the mass-intensity criteria in Table 3 for 50 ng DFTPP.

10.2 Mass-spectral libraries: Detection and identification of compounds of interest are dependent upon spectra stored in user-created libraries.

10.2.1 Obtain a mass spectrum of the acetyl derivative of each chlorophenolic compound (pollutant, labeled compound, and the sample matrix internal standard) by derivatizing and analyzing an authentic standard either singly or as part of a mixture in which there is no interference between closely eluting components. That only a single compound is present is determined by examination of the spectrum. Fragments not attributable to the compound under study indicate the presence of an interfering compound.

10.2.2 Adjust the analytical conditions and scan rate (for this test only) to produce an undistorted spectrum at the GC peak maximum. An undistorted spectrum will usually be obtained if five complete spectra are collected across the upper half of the GC peak. Software algorithms designed to ''enhance'' the spectrum may eliminate distortion, but may also eliminate authentic m/z's or introduce other distortion.

10.2.3 The authentic reference spectrum is obtained under DFTPP tuning conditions (Section 10.1 and Table 3) to normalize it to spectra from other instruments.

10.2.4 The spectrum is edited by removing all peaks in the m/z 42 to 45 range, and saving the five most intense mass spectral peaks and all other mass spectral peaks greater than 10% of the base peak (excluding the peaks in the m/z 42 to 45 range). The spectrum may be further edited to remove common interfering m/z's. The spectrum obtained is stored for reverse search and for compound confirmation. 10.3 Minimum level: Demonstrate that the chlorophenolics are detectable at the minimum level (per all criteria in Section 14). The nominal 5 µg/mL calibration standard (Section 7.13) can be used to demonstrate this performance.

10.4 Calibration with isotope dilution: Isotope dilution is used when (1) labeled compounds are available, (2) interferences do not preclude its use, and (3) the quantitation m/z (Table 4) extracted ion-current profile (EICP) area for the compound is in the calibration range. Alternative labeled compounds and quantitation m/z's may be used based on availability. If any of the above conditions preclude isotope dilution, the internal standard calibration method (Section 10.5) is used.

10.4.1 A calibration curve encompassing the concentration range is prepared for each compound to be determined. The relative response (pollutant to labeled) vs. concentration in standard solutions is plotted or computed using a linear regression. The example in Figure 1 shows a calibration curve for phenol using phenol-d5 as the isotopic diluent. Also shown are the ±10% error limits (dotted lines). Relative response (RR) is determined according to the procedures described below. A minimum of five data points are employed for calibration.

10.4.2 The relative response of a pollutant to its labeled analog is determined from isotope ratio values computed from acquired data. Three isotope ratios are used in this process:

R_x = the isotope ratio measured for the pure pollutant.

R_y = the isotope ratio measured for the labeled compound.

R_m = the isotope ratio of an analytical mixture of pollutant and labeled compounds.

The m/z's are selected such that $R_x > R_y$. If R_m is not between $2R_y$ and $0.5R_x$, the method does not apply and the sample is analyzed by the internal standard method.

10.4.3 Capillary columns sometimes separate the pollutant-labeled pair when deuterium labeled compounds are used, with the labeled compound eluted first (Figure 2). For this case,

$$R_x = \left[\frac{\text{area } m_1/z}{1}\right], \text{ at the retention time of the pollutant } (RT_2).$$

$$R_y = \left[\frac{1}{\text{area } m_2/z}\right], \text{ at the retention time of the labeled compound } (RT_1).$$

$$R_m = \left[\frac{\text{area at } m_1/z\ (\text{at } RT_2)}{\text{area at } m_2/z\ (\text{at } RT_1)}\right], \text{ as measured in the mixture of the pollutant and labeled compounds (Figure 2), and } RR = R_m.$$

10.4.4 When the pollutant-labeled pair is not separated (as occurs with carbon-13-labeled compounds), or when another labeled compound with interfering spectral masses overlaps the pollutant (a case which can occur with isomeric compounds), it is necessary to determine the contributions of the pollutant and labeled compound to the respective EICP areas. If the peaks are separated well enough to permit the data system or operator to remove the contributions of the compounds to each other, the equations in Section 10.4.3 apply. This usually occurs when the height of the valley between the two GC peaks at the same m/z is less than 70 to 90% of the height of the shorter of the two peaks. If significant GC and spectral overlap occur, RR is computed using the following equation:

$$RR = \frac{(R_y - R_m)(R_x + 1)}{(R_m - R_x)(R_y + 1)}$$

Where:

R_x is measured as shown in figure 3A,
R_y is measured as shown in figure 3B,
R_m is measured as shown in figure 3C.

For example, R_x = 46100/4780 = 9.644; R_y = 2650/43600 = 0.0608; R_m = 49200/48300 = 1.1019; thus, RR = 1.114. 10.4.5 To calibrate the analytical system by isotope dilution, analyze a 1-µL aliquot of each of the calibration standards (Section 7.13) using the procedure in Section 12. Compute the RR at each concentration.

10.4.6 Linearity: If the ratio of relative response to concentration for any compound is constant (less than 20% coefficient of variation) over the five-point calibration range, an averaged relative response/concentration ratio may be used for that compound; otherwise, the complete calibration curve for that compound shall be used over the five-point calibration range.

10.5 Calibration by internal standard: The method contains two types of internal standards, the sample matrix internal standard (SMIS) and the instrument internal standard (IIS), and they are used for different quantitative purposes. The 3,4,5-trichlorophenol sample matrix internal standard (SMIS) is used for measurement of all pollutants with no labeled analog and when the criteria for isotope dilution (Section 10.4) cannot be met. The 2,2′-difluorobiphenyl instrument internal standard (IIS) is used for determination of the labeled compounds and the SMIS. The results are used for intralaboratory statistics (Sections 9.4.4 and 9.6.3).

10.5.1 Response factors: Calibration requires the determination of response factors (RF) for both the pollutants with no labeled analog and for the labeled compounds and the SMIS. The response factor is defined by the following equation:

$$RF = \frac{(A_s \times C_{is})}{(A_{is} \times C_s)}$$

Where:

A_s=the area of the characteristic mass for the compound in the daily standard.
A_{is}=the area of the characteristic mass for the internal standard.
C_{is}=the concentration of the internal standard (µg/mL).
C_s=is the concentration of the compound in the calibration standard (µg/mL).

When this equation is used to determine the response factors for pollutant compounds without labeled analogs, use the area (A_{is}) and concentration (C_{is}) of 3,4,5-trichlorophenol (SMIS) as the internal standard. When this equation is used to determine the response factors for the labeled analogs and the SMIS, use the area (A_{is}) and concentration (C_{is}) of 2,2′-difluorobiphenyl as the internal standard.

10.5.2 The response factor is determined for at least five concentrations appropriate to the response of each compound (Section 7.13); nominally, 5, 10, 20, 50, and 100 µg/mL. The amount of SMIS added to each solution is the same (25 µg/mL) so that C_{is} remains constant. Likewise, the concentration of IIS is constant in each solution. The area ratio (A_s/A_{is}) is plotted versus the concentration ratio (C_s/C_{is}) for each compound in the standard to produce a calibration curve.

10.5.3 Linearity: If the response factor (RF) for any compound is constant (less than 35% coefficient of variation) over the five-point calibration range, an averaged response factor may be used for that compound; otherwise, the complete calibration curve for that compound shall be used over the five-point range.

10.6 Combined calibration: By using calibration solutions (Section 7.13) containing the pollutants, labeled compounds, and the internal standards, a single set of analyses can be used to produce calibration curves for the isotope dilution and internal standard methods. These curves are verified each shift (Section 9) by analyzing the OPR standard, or an optional calibration verification (VER) standard. Recalibration is required only if OPR criteria (Section 9.6 and Table 5) cannot be met.

11.0 Sample Derivatization, Extraction, and Concentration

The procedure described in this section uses a stir-bar in a beaker for the derivatization. The extraction procedures applied to samples depend on the type of sample being analyzed. Extraction of samples from in-process wastewaters is performed using a separatory funnel procedure. All calibrations, IPR, OPR, and blank analyses associated with in-process wastewater samples must be performed by the separatory funnel procedure.

Extraction of samples of final effluents and raw water may be performed using either the stir-bar procedure or the separatory funnel procedure. However, all calibrations, IPR, OPR, blank, and sample analyses must be performed using the same procedure. Both procedures are described below.

11.1 Preparation of all sample types for stir-bar derivatization.

11.1.1 Allow sample to warm to room temperature.

11.1.2 Immediately prior to measuring, shake sample vigorously to insure homogeneity.

11.1.3 Measure 1000 mL (±10 mL) of sample into a clean 2000-mL beaker. Label the beaker with the sample number.

11.1.4 Dilute aliquot(s).

11.1.4.1 Complex samples: For samples that are expected to be difficult to derivatize, concentrate, or are expected to overload the GC column or mass spectrometer, measure an additional 100 mL (±1 mL) into a clean 2000-mL beaker and dilute to a final volume of 1000-mL (±50 mL) with reagent water. Label with the sample number and as the dilute aliquot. However, to ensure adequate sensitivity, a 1000-mL aliquot must always be prepared and analyzed.

11.1.4.2 Pulp and paper industry samples: For in-process streams such as E-stage and C-stage filtrates and other in-process wastewaters, it may be necessary to prepare an aliquot at an additional level of dilution. In this case, dilute 10 mL (±0.1 mL) of sample to 1000-mL (±50 mL).

11.1.5 QC aliquots: For a batch of samples of the same type to be extracted at the same time (to a maximum of 20), place two 1000-mL (±10 mL) aliquots of reagent water in clean 2000-mL beakers. Label one beaker as the blank and the other as the ongoing precision and recovery (OPR) aliquot. Because final effluent samples are treated with ascorbic acid and in-process wastewater samples are not (see Section 11.1.6), prepare an OPR aliquot and a blank for the final effluent and a separate pair for the in-process samples. Treat these QC aliquots in the same fashion as the associated samples, adding

ascorbic acid to the pair associated with the final effluents, and not adding ascorbic acid to the pair associated with the in-process samples.

11.1.6 Ascorbic acid: Added to stabilize chlorocatechols. However, for pulp and paper industry in-process streams and other in-process wastewaters, the addition of ascorbic acid may convert chloro-o-quinones to catechols if these quinones are present. Separate calibration curves must be prepared with and without the addition of ascorbic acid (Section 7.13.2).

11.1.6.1 Spike 5 to 6 mL of the ascorbic acid solution (Section 7.2.2) into each final effluent sample, and the associated calibration standards, IPR and OPR aliquots, and blank.

11.1.6.2 For pulp and paper industry C-stage filtrates, E-stage filtrates, and untreated effluents, omit the ascorbic acid to prevent the conversion of chloro-o-quinones to catechols. Prepare calibration standards, IPR and OPR aliquots, and blanks associated with these samples without ascorbic acid as well.

11.1.7 Spike 1000 µL of the labeled compound spiking solution (Section 7.8) into the sample and QC aliquots.

11.1.8 Spike 500 µL of the nominal 50 µg/mL calibration solution (Section 7.13.4) into the OPR aliquot.

11.1.9 Adjust the pH of the sample aliquots to between 7.0 and 7.1. For calibration standards, IPR and OPR aliquots, and blanks, pH adjustment is not required.

11.1.10 Equilibrate all sample and QC solutions for approximately 15 minutes, with occasional stirring.

11.2 Derivatization: Because derivatization must proceed rapidly, particularly upon the addition of the K_2CO_3 buffer, it is necessary to work with one sample at a time until the derivatization step (Section 11.2.3) is complete.

11.2.1 Place a beaker containing a sample or QC aliquot on the magnetic stirrer in a fume hood, drop a clean stirring bar into the beaker, and increase the speed of the stirring bar until the vortex is drawn to the bottom of the beaker.

11.2.2 Measure 25 to 26 mL of K_2CO_3 buffer into a graduated cylinder or other container and 25 to 26 mL of acetic acid into another.

11.2.3 Add the K_2CO_3 buffer to the sample or QC aliquot, immediately (within one to three seconds) add the acetic anhydride, and stir for three to five minutes to complete the derivatization.

11.3 Extraction: Two procedures are described below for the extraction of derivatized samples. The choice of extraction procedure will depend on the sample type. For final effluent samples, either of two procedures may be utilized for extraction of derivatized samples. For samples of in-process wastewaters, the separatory funnel extraction procedure must be used.

Note: Whichever procedure is employed, the same extraction procedure must be used for calibration standards, IPR aliquots, OPR aliquots, blanks, and the associated field samples.

11.3.1 Stir-bar extraction of final effluents.

11.3.1.1 Add 200 mL (±20 mL) of hexane to the beaker and stir for three to five minutes, drawing the vortex to the bottom of the beaker.

11.3.1.2 Stop the stirring and drain the hexane and a portion of the water into a 500- to 1000-mL separatory funnel. Allow the layers to separate.

11.3.1.3 Drain the aqueous layer back into the beaker.

11.3.1.4 The formation of emulsions can be expected in any solvent extraction procedure. If an emulsion forms, the laboratory must take steps to break the emulsion before proceeding. Mechanical means of breaking the emulsion include the use of a glass stirring rod, filtration through glass wool, and other techniques. For emulsions that resist these techniques, centrifugation is nearly 100% effective.

If centrifugation is employed to break the emulsion, drain the organic layer into a centrifuge tube, cap the tube, and centrifuge for two to three minutes or until the phases separate. If the emulsion cannot be completely broken, collect as much of the organic phase as possible, and measure and record the volume of the organic phase collected.

If all efforts to break the emulsion fail, including centrifugation, and none of the organic phase can be collected, proceed with the dilute aliquot (Section 11.1.4.2). However, use of the dilute aliquot will sacrifice the sensitivity of the method, and may not be appropriate in all cases.

11.3.1.5 Drain the organic layer into a Kuderna-Danish (K–D) apparatus equipped with a 10-mL concentrator tube. Label the K–D apparatus. It may be necessary to pour the organic layer through a funnel containing anhydrous sodium sulfate to remove any traces of water from the extract.

11.3.1.6 Repeat the extraction (Section 11.3.1.1 through 11.3.1.5) two more times using another 200-mL of hexane for each extraction, combining the extracts in the K–D apparatus.

11.3.1.7 Proceed with concentration of the extract, as described in Section 11.4.

11.3.2 Separatory funnel extraction of either final effluents or in-process wastewaters.

11.3.2.1 Transfer the derivatized sample or QC aliquot to a 2-L separatory funnel.

11.3.2.2 Add 200 mL (±20 mL) of hexane to the separatory funnel. Cap the funnel and extract the sample by shaking the funnel for two to three minutes with periodic venting.

11.3.2.3 Allow the organic layer to separate from the water phase for a minimum of 10 minutes.

11.3.2.4 Drain the lower aqueous layer into the beaker used for derivatization (Section 11.2), or into a second clean 2-L separatory funnel. Transfer the solvent to a 1000-mL K–D flask. It may be necessary to pour the organic layer through a funnel containing anhydrous sodium sulfate to remove any traces of water from the extract.

11.3.2.5 The formation of emulsions can be expected in any solvent extraction procedure. If an emulsion forms, the laboratory must take steps to break the emulsion before proceeding. Mechanical means of breaking the emulsion include the use of a glass stirring rod, filtration through glass wool, and other techniques. For emulsions that resist these techniques, centrifugation may be required.

If centrifugation is employed to break the emulsion, drain the organic layer into a centrifuge tube, cap the tube, and centrifuge for two to three minutes or until the phases separate. If the emulsion cannot be completely broken, collect as much of the organic phase as possible, and measure and record the volume of the organic phase collected. If all efforts to break the emulsion, including centrifugation, fail and none of the organic phase can be collected, proceed with the dilute aliquot (Section 11.1.4.2). However, use of the dilute aliquot will sacrifice the sensitivity of the method, and may not be appropriate in all cases.

11.3.2.6 If drained into a beaker, transfer the aqueous layer to the 2-L separatory funnel (Section 11.3.2.1). Perform a second extraction using another 200 mL of fresh solvent.

11.3.2.7 Transfer the extract to the 1000-mL K–D flask in Section 11.3.2.4.

11.3.2.8 Perform a third extraction in the same fashion as above.

11.3.2.9 Proceed with concentration of the extract, as described in Section 11.4.

11.4 Macro concentration: Concentrate the extracts in separate 1000-mL K–D flasks equipped with 10-mL concentrator tubes. Add one to two clean boiling chips to the flask and attach a three-ball macro-Snyder column. Prewet the column by adding approximately 1 mL of hexane through the top. Place the K–D apparatus in a hot water bath so that the entire lower rounded surface of the flask is bathed with steam. Adjust the vertical position of the apparatus and the water temperature as required to complete the concentration in 15 to 20 minutes. At the proper rate of distillation, the balls of the column will actively chatter but the chambers will not flood. When the liquid has reached an apparent volume of 1 mL, remove the K–D apparatus from the bath and allow the solvent to drain and cool for at least 10 minutes. Remove the Snyder column and rinse the flask and its lower joint into the concentrator tube with 1 to 2 mL of hexane. A 5-mL syringe is recommended for this operation.

11.5 Micro-concentration: Final concentration of the extracts may be accomplished using either a micro-Snyder column or nitrogen evaporation.

11.5.1 Micro-Snyder column: Add a clean boiling chip and attach a two-ball micro-Snyder column to the concentrator tube. Prewet the column by adding approximately 0.5 mL hexane through the top. Place the apparatus in the hot water bath. Adjust the vertical position and the water temperature as required to complete the concentration in 5 to 10 minutes. At the proper rate of distillation, the balls of the column will actively chatter but the chambers will not flood. When the liquid reaches an apparent volume of approximately 0.2 mL, remove the apparatus from the water bath and allow to drain and cool for at least 10 minutes. Remove the micro-Snyder column and rinse its lower joint into the concentrator tube with approximately 0.2 mL of hexane. Adjust to a final volume of 0.5 mL.

11.5.2 Nitrogen evaporation: Transfer the concentrator tube to a nitrogen evaporation

device and direct a gentle stream of clean dry nitrogen into the concentrator. Rinse the sides of the concentrator tube with small volumes of hexane, and concentrate the extract to a final volume of 0.5 mL.

11.6 Spike each extract with 10 µL of the 2,2′-difluorobiphenyl IIS (Section 7.10) and transfer the concentrated extract to a clean screw-cap vial using hexane to rinse the concentrator tube. Seal the vial with a PTFE-lined lid, and mark the level on the vial. Label with the sample number and store in the dark at −20 to −10 °C until ready for analysis.

12.0 GCMS Analysis

12.1 Establish the following operating conditions:

Carrier gas flow: Helium at 30 cm/sec at 50 °C
Injector temperature: 300 °C
Initial temperature: 50 °C
Temperature program: 8 °C/min to 270 °C
Final hold: Until after 2,6-dichlorosyringaldehyde elutes

Adjust the GC conditions to meet the requirements in Section 9.6.1.1 and Table 2 for analyte separation and sensitivity. Once optimized, the same GC conditions must be used for the analysis of all standards, blanks, IPR and OPR aliquots, and samples.

12.2 Bring the concentrated extract (Section 11.6) or standard (Sections 7.13 and 7.14) to room temperature and verify that any precipitate has redissolved. Verify the level on the extract (Sections 7.13, 7.14, and 11.6) and bring to the mark with solvent if required.

12.3 Inject a 1-µL volume of the standard solution or extract using on-column or splitless injection. For 0.5 mL extracts, this 1-µL injection volume will contain 50 ng of the DFB internal standard. If an injection volume other than 1 µL is used, that volume must contain 50 ng of DFB.

12.4 Start the GC column temperature ramp upon injection. Start MS data collection after the solvent peak elutes. Stop data collection after the 2,6-dichlorosyringaldehyde peak elutes. Return the column to the initial temperature for analysis of the next sample.

13.0 Analysis of Complex Samples

Some samples may contain high levels (>1000 µg/L) of the compounds of interest, interfering compounds, and/or other phenolic materials. Some samples will not concentrate to 0.5 mL (Section 11.5); others will overload the GC column and/or mass spectrometer; others may contain amounts of phenols that may exceed the capacity of the derivatizing agent.

13.1 Analyze the dilute aliquot (Section 11.1.4) when the sample will not concentrate to 0.5 mL. If a dilute aliquot was not extracted, and the sample holding time (Section 8.4) has not been exceeded, dilute an aliquot of sample with reagent water, and derivatize and extract it (Section 11.1.4). Otherwise, dilute the extract (Section 14.7.3) and quantitate it by the internal standard method (Section 14.3).

13.2 Recovery of the 2,2′-difluorobiphenyl instrument internal standard: The EICP area of the internal standard should be within a factor of two of the area in the OPR or VER standard (Section 9.6). If the absolute areas of the labeled compounds and the SMIS are within a factor of two of the respective areas in the OPR or VER standard, and the DFB internal standard area is less than one-half of its respective area, then internal standard loss in the extract has occurred. In this case, analyze the extract from the dilute aliquot (Section 11.1.4).

13.3 Recovery of labeled compounds and the sample matrix internal standard (SMIS): SMIS and labeled compound recovery specifications have been developed for samples with and without the addition of ascorbic acid. Compare the recoveries to the appropriate limits in Table 5.

13.3.1 If SMIS or labeled compound recoveries are outside the limits given in Table 5 and the associated OPR analysis meets the recovery criteria, the extract from the dilute aliquot (Section 11.1.4) is analyzed as in Section 14.7.

13.3.2 If labeled compound or SMIS recovery is outside the limits given in Table 5 and the associated OPR analysis did not meet recovery criteria, a problem in the derivatization/extraction/concentration of the sample is indicated, and the sample must be rederivatized and reanalyzed.

14.0 Data Analysis and Calculations

14.1 Qualitative determination: Identification is accomplished by comparison of data from analysis of a sample or blank with data stored in the mass spectral libraries. Identification of a compound is confirmed when the following criteria are met:

14.1.1 The signals for m/z 43 (to indicate the presence of the acetyl derivative) and all characteristic m/z's stored in the spectral library (Section 10.2.4) shall be present and shall maximize within the same two consecutive scans.

14.1.2 Either (1) the background corrected EICP areas, or (2) the corrected relative intensities of the mass spectral peaks at the GC peak maximum shall agree within a factor of two (0.5 to 2 times) for all m/z's stored in the library.

14.1.3 The relative retention time shall be within the window specified in Table 2.

14.1.4 The m/z's present in the mass spectrum from the component in the sample that are not present in the reference mass spectrum shall be accounted for by contaminant or background ions. If the mass spectrum is contaminated, an experienced spectrometrist (Section 1.4) shall determine the presence or absence of the compound.

14.2 Quantitative determination by isotope dilution: By adding a known amount of a labeled compound to every sample prior to derivatization and extraction, correction for recovery of the pollutant can be made because the pollutant and its labeled analog exhibit the same effects upon derivatization, extraction, concentration, and gas chromatography. Relative response (RR) values for sample mixtures are used in conjunction with calibration curves described in Section 10.4 to determine concentrations directly, so long as labeled compound spiking levels are constant. For the phenol example given in Figure 1 (Section 10.4.1), RR would be equal to 1.114. For this RR value, the phenol calibration curve given in Figure 1 indicates a concentration of 27 µg/mL in the sample extract (C_{ex}).

14.2.1 Compute the concentration in the extract using the response ratio determined from calibration data (Section 10.4) and the following equation:

$$C_{ex}(\mu g/mL) = (A_n \times C_l) / (A_l \times RR)$$

Where:

C_{ex} = concentration of the pollutant in the extract.
A_n = area of the characteristic m/z for the pollutant.
C_l = concentration of the labeled compound in the extract.
A_l = area of the characteristic m/z for the labeled compound.
RR = response ratio from the initial calibration.

14.2.2 For the IPR (Section 9.3.2) and OPR (Section 9.6), compute the percent recovery of each pollutant using the equation in Section 14.6. The percent recovery is used for the evaluation of method and laboratory performance, in the form of IPR (Section 9.3.2) and OPR (Section 9.6).

14.3 Quantitative determination by internal standard: Compute the concentration using the response factor determined from calibration data (Section 10.5) and the following equation:

$$C_{ex}(\mu g/mL) = (A_s \times C_{is}) / (A_{is} \times RF)$$

Where:

C_{ex} = concentration of the pollutant in the extract.
A_s = area of the characteristic m/z for the pollutant.
C_{is} = concentration of the internal standard in the extract (see note below).
A_{is} = area of the characteristic m/z for the internal standard.
RF = response factor from the initial calibration.

Note: When this equation is used to compute the extract concentrations of native compounds without labeled analogs, use the area (A_{is}) and concentration (C_{is}) of 3,4,5-trichlorophenol (SMIS) as the internal standard.

For the IPR (Section 9.3.2) and OPR (Section 9.6), compute the percent recovery using the equation in Section 14.6.

Note: Separate calibration curves will be required for samples with and without the addition of ascorbic acid, and also for both extraction procedures (stir-bar and separatory funnel) where applicable.

14.4 Compute the concentration of the labeled compounds and the SMIS using the equation in Section 14.3, but using the area and concentration of the 2,2′-difluorobiphenyl as the internal standard, and the area of the labeled compound or SMIS as A_s.

14.5 Compute the concentration of each pollutant compound in the sample using the following equation:

$$C_s = (\mu g/L) = \frac{(C_{ex} \times V_{ex})}{V_o}$$

Where:

C_s = Concentration of the pollutant in the sample.

C_{ex} = Concentration of the pollutant in the extract.

V_{ex} = Volume of the concentrated extract (typically 0.5 mL).

V_o = Volume of the original sample in liters.

14.6 Compute the recovery of each labeled compound and the SMIS as the ratio of concentration (or amount) found to the concentration (or amount) spiked, using the following equation:

$$\text{Percent recovery} = \frac{\text{Concentration found}}{\text{Concentration spiked}} \times 100$$

These percent recoveries are used to assess method performance according to Sections 9 and 13.

14.7 If the EICP area at the quantitation m/z for any compound exceeds the calibration range of the system, three approaches are used to obtain results within the calibration range.

14.7.1 If the recoveries of all the labeled compounds in the original sample aliquot meet the limits in Table 5, then the extract of the sample may be diluted by a maximum of a factor of 10, and the diluted extract reanalyzed.

14.7.2 If the recovery of any labeled compound is outside its limits in Table 5, or if a tenfold dilution of the extract will not bring the pollutant within the calibration range, then extract and analyze a dilute aliquot of the sample (Section 11). Dilute 100 mL, 10 mL, or an appropriate volume of sample to 1000 mL with reagent water and extract per Section 11.

14.7.3 If the recoveries of all labeled compounds in the original sample aliquot (Section 14.7.1) meet the limits in Table 5, and if the sample holding time has been exceeded, then the original sample extract is diluted by successive factors of 10, the DFB internal standard is added to give a concentration of 50 µg/mL in the diluted extract, and the diluted extract is analyzed. Quantitation of all analytes is performed using the DFB internal standard.

14.7.4 If the recoveries of all labeled compounds in the original sample aliquot (Section 14.7.1) or in the dilute aliquot (Section 14.7.2) (if a dilute aliquot was analyzed) do not meet the limits in Table 5, and if the holding time has been exceeded, re-sampling is required.

14.8 Results are reported for all pollutants, labeled compounds, and the sample matrix internal standard in standards, blanks, and samples, in units of µg/L.

14.8.1 Results for samples which have been diluted are reported at the least dilute level at which the area at the quantitation m/z is within the calibration range (Section 14.7).

14.8.2 For compounds having a labeled analog, results are reported at the least dilute level at which the area at the quantitation m/z is within the calibration range (Section 14.7) and the labeled compound recovery is within the normal range for the method (Section 13.3).

15.0 Method Performance

15.1 Single laboratory performance for this method is detailed in References 1, 2, and 11. Acceptance criteria were established from multiple laboratory use of the draft method.

15.2 A chromatogram of the ongoing precision and recovery standard (Section 7.14) is shown in Figure 4.

16.0 Pollution Prevention

16.1 The solvents used in this method pose little threat to the environment when recycled and managed properly.

16.2 Standards should be prepared in volumes consistent with laboratory use to minimize the volume of expired standards to be disposed.

17.0 Waste Management

17.1 It is the laboratory's responsibility to comply with all federal, state, and local regulations governing waste management, particularly the hazardous waste identification rules and land disposal restrictions, and to protect the air, water, and land by minimizing and controlling all releases from fume hoods and bench operations. Compliance with all sewage discharge permits and regulations is also required.

17.2 Samples preserved with HCl or H_2SO_4 to pH < 2 are hazardous and must be neutralized before being disposed, or must be handled as hazardous waste.

17.3 For further information on waste management, consult ''The Waste Management Manual for Laboratory Personnel'', and ''Less is Better: Laboratory Chemical Management for Waste Reduction'', both available from the American Chemical Society's Department of Government Relations and Science Policy, 1155 16th Street N.W., Washington, D.C. 20036.

18.0 References

18.1 ''Chlorinated Phenolics in Water by In Situ Acetylation/GC/MS Determination,'' Method CP–86.01, National Council of the Paper Industry for Air and Stream Improvement, Inc., 260 Madison Avenue, New York, NY 10016 (July 1986).

18.2 ''6240-Chlorinated Phenolics (Interim Standard),'' Draft Version, U.S. Environmental Protection Agency, Manchester Laboratory, Manchester, Washington.

18.3 ''Performance Tests for the Evaluation of Computerized Gas Chromatography/Mass Spectrometry Equipment and Laboratories,'' USEPA, EMSL Cincinnati, OH 45268, EPA–600/4–80–025 (April 1980).

18.4 ''Working with Carcinogens,'' DHEW, PHS, CDC, NIOSH, Publication 77–206 (August 1977).

18.5 ''OSHA Safety and Health Standards, General Industry,'' OSHA 2206, 29 CFR 1910 (January 1976).

18.6 ''Safety in Academic Chemistry Laboratories,'' ACS Committee on Chemical Safety (1979).

18.7 ''Interlaboratory Validation of U. S. Environmental Protection Agency Method 1625A, Addendum Report,'' SRI International, Prepared for Analysis and Evaluation Division (WH–557), USEPA, 401 M St. SW, Washington, DC 20460 (January 1985).

18.8 ''Handbook of Analytical Quality Control in Water and Wastewater Laboratories,'' USEPA, EMSL, Cincinnati, OH 45268, EPA–600/4–79–019 (March 1979).

18.9 ''Standard Practice for Sampling Water,'' ASTM Annual Book of Standards, ASTM, Philadelphia, PA, 76 (1980).

18.10 ''Methods 330.4 and 330.5 for Total Residual Chlorine,'' USEPA, EMSL, Cincinnati, OH 45268, EPA 600/4–70–020 (March 1979).

18.11 ''Determination of Chlorophenolics, Special Analytical Services Contract 1047, Episode 1886,'' Analytical Technologies, Inc., Prepared for W. A. Telliard, Industrial Technology Division (WH–552), USEPA, 401 M St. SW, Washington, DC 20460 (June 1990).

18.12 ''Determination of Chlorophenolics by GCMS, Development of Method 1653,'' Analytical Technologies, Inc., Prepared for W. A. Telliard, Industrial Technology Division (WH–552), USEPA, 401 M St. SW, Washington, DC 20460 (May 1991).

19.0 Tables and Figures

TABLE 1.—CHLOROPHENOLIC COMPOUNDS DETERMINED BY GCMS USING ISOTOPE DILUTION AND INTERNAL STANDARD TECHNIQUES

Compound	Pollutant		Labeled compound		
	CAS registry	EPA–EGD	Analog	CAS registry	EPA–EGD
4-chlorophenol	106–48–9	1001			
2,4-dichlorophenol	120–83–2	1002	d_3	93951–74–7	1102
2,6-dichlorophenol	87–65–0	1003			
2,4,5-trichlorophenol	95–95–4	1004			
2,4,6-trichlorophenol	88–06–2	1005			
2,3,4,6-tetrachlorophenol	58–90–2	1006			
pentachlorophenol	87–86–5	1007	$^{13}C_6$	85380–74–1	1107
4-chloroguaiacol	16766–30–6	1008	$^{13}C_6$	136955–39–0	1108
3,4-dichloroguaiacol	77102–94–4	1009			
4,5-dichloroguaiacol	2460–49–3	1010			
4,6-dichloroguaiacol	16766–31–7	1011			
3,4,5-trichloroguaiacol	57057–83–7	1012			
3,4,6-trichloroguaiacol	60712–44–9	1013			
4,5,6-trichloroguaiacol	2668–24–8	1014	$^{13}C_6$	136955–40–3	1114
tetrachloroguaiacol	2539–17–5	1015	$^{13}C_6$	136955–41–4	1115
4-chlorocatechol	2138–22–9	1016			
3,4-dichlorocatechol	3978–67–4	1017			
3,6-dichlorocatechol	3938–16–7	1018			
4,5-dichlorocatechol	3428–24–8	1019	$^{13}C_6$	136955–42–5	1119
3,4,5-trichlorocatechol	56961–20–7	1020			
3,4,6-trichlorocatechol	32139–72–3	1021			
tetrachlorocatechol	1198–55–6	1022	$^{13}C_6$	136955–43–6	1122
5-chlorovanillin	19463–48–0	1023	$^{13}C_6$	136955–44–7	1123
6-chlorovanillin	18268–76–3	1024			
5,6-dichlorovanillin	18268–69–4	1025			
2-chlorosyringaldehyde	76341–69–0	1026			
2,6-dichlorosyringaldehyde	76330–06–8	1027			
trichlorosyringol	2539–26–6	1028			
Sample matrix internal standard (SMIS)					
3,4,5-trichlorophenol	609–19–8	184			
Instrument internal standard (IIS)					
2,2'-difluorobiphenyl	388–82–9	164			

TABLE 2.—GAS CHROMATOGRAPHY AND METHOD DETECTION LIMITS FOR CHLOROPHENOLICS

EGD No.[1]	Compound	Retention time mean (sec)[2]	EGD ref No.	RRT window[3]	Minimum level[4] (µg/L)	MDL[5] (µg/L)
1001	4-chlorophenol	691	184	0.651–0.681	1.25	1.11
1003	2,6-dichlorophenol	796	184	0.757–0.779	2.5	1.39
1102	2,4-dichlorophenol-d_3	818	164	0.986–0.998		
1202	2,4-dichlorophenol	819	1102	0.997–1.006	2.5	0.15
164	2,2'-difluorobiphenyl (I.S.)	825	164	1.000		
1108	4-chloroguaiacol-$^{13}C_6$	900	164	1.077–1.103		
1208	4-chloroguaiacol	900	1108	0.998–1.002	1.25	0.09
1005	2,4,6-trichlorophenol	920	184	0.879–0.895	2.5	0.71
1004	2,4,5-trichlorophenol	979	184	0.936–0.952	2.5	0.57
1016	4-chlorocatechol	1004	184	0.961–0.975	1.25	0.59
1011	4,6-dichloroguaiacol	1021	184	0.979–0.991	2.5	0.45
1009	3,4-dichloroguaiacol	1029	184	0.986–0.998	2.5	0.52
184	3,4,5-trichlorophenol (I.S.)	1037	164	1.242–1.272		
1010	4,5-dichloroguaiacol	1071	184	1.026–1.040	2.5	0.52
1018	3,6-dichlorocatechol	1084	184	1.037–1.053	2.5	0.57
1006	2,3,4,6-tetrachlorophenol	1103	184	1.050–1.078	2.5	0.38
1123	5-chlorovanillin-$^{13}C_6$	1111	164	1.327–1.367		
1223	5-chlorovanillin	1111	1123	0.998–1.001	2.5	1.01
1013	3,4,6-trichloroguaiacol	1118	184	1.066–1.090	2.5	0.46
1024	6-chlorovanillin	1122	184	1.070–1.094	2.5	0.94
1017	3,4-dichlorocatechol	1136	184	1.083–1.105	2.5	0.60
1119	4,5-dichlorocatechol-$^{13}C_6$	1158	164	1.384–1.424		
1219	4,5-dichlorocatechol	1158	1119	0.998–1.001	2.5	0.24
1012	3,4,5-trichloroguaiacol	1177	184	1.120–1.160	2.5	0.49
1114	4,5,6-trichloroguaiacol-$^{13}C_6$	1208	164	1.444–1.484		
1214	4,5,6-trichloroguaiacol	1208	1114	0.998–1.002	2.5	0.25
1021	3,4,6-trichlorocatechol	1213	184	1.155–1.185	5.0	0.44
1025	5,6-dichlorovanillin	1246	184	1.182–1.222	5.0	0.80

TABLE 2.—GAS CHROMATOGRAPHY AND METHOD DETECTION LIMITS FOR CHLOROPHENOLICS—Continued

EGD No.[1]	Compound	Retention time mean (sec)[2]	EGD ref No.	RRT window[3]	Minimum level[4] (µg/L)	MDL[5] (µg/L)
1026	2-chlorosyringaldehyde	1255	184	1.190–1.230	2.5	0.87
1107	pentachlorophenol-$^{13}C_6$	1267	164	1.511–1.561		
1207	pentachlorophenol	1268	1107	0.998–1.002	5.0	0.28
1020	3,4,5-trichlorocatechol	1268	184	1.208–1.238	5.0	0.53
1115	tetrachloroguaiacol-$^{13}C_6$	1289	164	1.537–1.587		
1215	tetrachloroguaiacol	1290	1115	0.998–1.002	5.0	0.23
1028	trichlorosyringol	1301	184	1.240–1.270	2.5	0.64
1122	tetrachlorocatechol-$^{13}C_6$	1365	164	1.630–1.690		
1222	tetrachlorocatechol	1365	1122	0.998–1.002	5.0	0.76
1027	2,6-dichlorosyringaldehyde	1378	184	1.309–1.349	5.0	1.13

[1] Four digit numbers beginning with 10 indicate a pollutant quantified by the internal standard method; four digit numbers beginning with 11 indicate a labeled compound quantified by the internal standard method; four digit numbers beginning with 12 indicate a pollutant quantified by isotope dilution.
[2] The retention times in this column are based on data from a single laboratory (reference 12), utilizing the GC conditions in Section 11.
[3] Relative retention time windows are estimated from EPA Method 1625.
[4] The minimum level (ML) is defined as the level at which the entire analytical system must give a recognizable signal and acceptable calibration point for the analyte. It is equivalent to the concentration of the lowest calibration standard, assuming that all method-specified sample weights, volumes, and cleanup procedures have been employed.
[5] 40 CFR Part 136, Appendix B; from reference 2.

TABLE 3.—DFTPP MASS INTENSITY SPECIFICATIONS[1]

Mass	Intensity required
51	8 to 82% of m/z 198.
68	Less than 2% of m/z 69.
69	11 to 91% of m/z 198.
70	Less than 2% of m/z 69.
127	32 to 59% of m/z 198.
197	Less than 1% of m/z 198.
198	Base peak, 100% abundance.
199	4 to 9% of m/z 198.
275	11 to 30% of m/z 198.
441	44 to 110% of m/z 443.
442	30 to 86% of m/z 198.
443	14 to 24% of m/z 442.

[1] Reference 7.

TABLE 4.—CHARACTERISTIC M/Z'S OF CHLOROPHENOLIC COMPOUNDS

Compound	Primary m/z
4-chlorophenol	128
2,4-dichlorophenol	162
2,4-dichlorophenol-d_3	167
2,6-dichlorophenol	162
2,4,5-trichlorophenol	196
2,4,6-trichlorophenol	196
2,3,4,6-tetrachlorophenol	232
pentachlorophenol	266
pentachlorophenol$-^{13}C_6$	272
4-chloroguaiacol	158
4-chloroguaiacol$-^{13}C_6$	164
3,4-dichloroguaiacol	192
4,5-dichloroguaiacol	192
4,6-dichloroguaiacol	192
3,4,5-trichloroguaiacol	226
3,4,6-trichloroguaiacol	226
4,5,6-trichloroguaiacol	226
4,5,6-trichloroguaiacol$-^{13}C_6$	234
tetrachloroguaiacol	262
tetrachloroguaiacol$-^{13}C_6$	268
4-chlorocatechol	144
3,4-dichlorocatechol	178
3,6-dichlorocatechol	178
4,5-dichlorocatechol	178
4,5-dichlorocatechol$-^{13}C_6$	184
3,4,5-trichlorocatechol	212
3,4,6-trichlorocatechol	212

TABLE 4.—CHARACTERISTIC M/Z'S OF CHLOROPHENOLIC COMPOUNDS—Continued

Compound	Primary m/z
tetrachlorocatechol	248
tetrachlorocatechol-$^{13}C_6$	254
5-chlorovanillin	186
5-chlorovanillin-$^{13}C_6$	192
6-chlorovanillin	186
5,6-dichlorovanillin	220
2-chlorosyringaldehyde	216
2,6-dichlorosyringaldehyde	250
trichlorosyringol	256
Sample Matrix Internal Standard (SMIS)	
3,4,5-trichlorophenol	196
Instrument Internal Standard (IIS)	
2,2′-difluorobiphenyl	190

TABLE 5.—ACCEPTANCE CRITERIA FOR PERFORMANCE TESTS [1]

EGD No.[2]	Compound	Test conc.[3] (µg/mL)	Initial precision and recovery sec. 9.3.2 (percent)		Ongoing recovery sec. 9.6 (percent)	Labeled compound and SMIS recovery sec. 9.4 and 14.6	
			s	X		With ascorbic acid P (%)	Without ascorbic acid P (%)
1001	4-chlorophenol	25	64	72–144	40–236		
1202	2,4-dichlorophenol	50	14	84–120	84–118		
1102	2,4-dichlorophenol-d_3	25	54	64–160	56–170	58–135	27–143
1003	2,6-dichlorophenol	50	20	66–148	58–170		
1004	2,4,5-trichlorophenol	50	14	78–140	82–128		
1005	2,4,6-trichlorophenol	50	20	72–142	72–146		
1006	2,3,4,6-tetrachlorophenol	50	14	80–132	82–132		
1207	pentachlorophenol	100	6	90–111	84–120		
1107	pentachlorophenol-$^{13}C_6$	25	21	58–169	61–157	8–143	27–167
1208	4-chloroguaiacol	25	20	88–120	88–120		
1108	4-chloroguaiacol-$^{13}C_6$	25	104	68–148	64–152	59–121	43–168
1009	3,4-dichloroguaiaco[4]	50	18	80–126	82–126		
1010	4,5-dichloroguaiacol	50	14	82–121	80–128		
1011	4,6-dichloroguaiacol	50	16	82–126	86–120		
1012	3,4,5-trichloroguaiacol	50	16	78–130	80–134		
1013	3,4,6-trichloroguaiacol	50	16	64–152	74–140		
1214	4,5,6-trichloroguaiacol	50	14	92–106	88–116		
1114	4,5,6-trichloroguaiacol-$^{13}C_6$	25	48	66–146	74–140	48–131	51–139
1215	tetrachloroguaiacol	100	7	84–115	81–126		
1115	tetrachloroguaiacol-$^{13}C_6$	25	22	57–173	65–161	35–120	27–161
1016	4-chlorocatechol	25	48	76–140	80–124		
1017	3,4-dichlorocatechol	50	24	66–154	78–134		
1018	3,6-dichlorocatechol	50	16	78–136	84–126		
1219	4,5-dichlorocatechol	50	8	84–118	86–122		
1119	4,5-dichlorocatechol-$^{13}C_6$	25	78	68–144	66–142	33–129	0–190
1020	3,4,5-trichlorocatechol	100	17	60–166	72–128		
1021	3,4,6-trichlorocatechol[4]	100	17	74–138	64–149		
1222	tetrachlorocatechol	100	29	46–234	81–132		
1122	tetrachlorocatechol-$^{13}C_6$	25	39	48–227	63–152	14–118	0–184
1223	5-chlorovanillin	50	20	94–208	84–118		
1123	5-chlorovanillin-$^{13}C_6$	25	84	68–160	70–144	51–126	32–254
1024	6-chlorovanillin	50	22	82–128	80–126		
1025	5,6-dichlorovanillin	100	9	67–146	77–140		
1026	2-chlorosyringaldehyde	50	28	76–130	72–156		
1027	2,6-dichlorosyringaldehyde	100	14	82–129	60–183		
1028	trichlorosyringol	50	18	76–136	66–174		
Sample Matrix Internal Standard							
184	3,4,5-trichlorophenol	100	47	62–185	68–144	56–116	24–167

[1] Specifications derived from multi-laboratory testing of draft method.
[2] Four-digit numbers beginning with 10 indicate a pollutant quantified by the internal standard method; four-digit numbers beginning with 11 indicate a labeled compound quantified by the internal standard method; four-digit numbers beginning with 12 indicate a pollutant quantified by isotope dilution.
[3] Test concentrations are in units of µg/mL.
[4] Specification derived from isomer.

BILLING CODE 6560–50–P

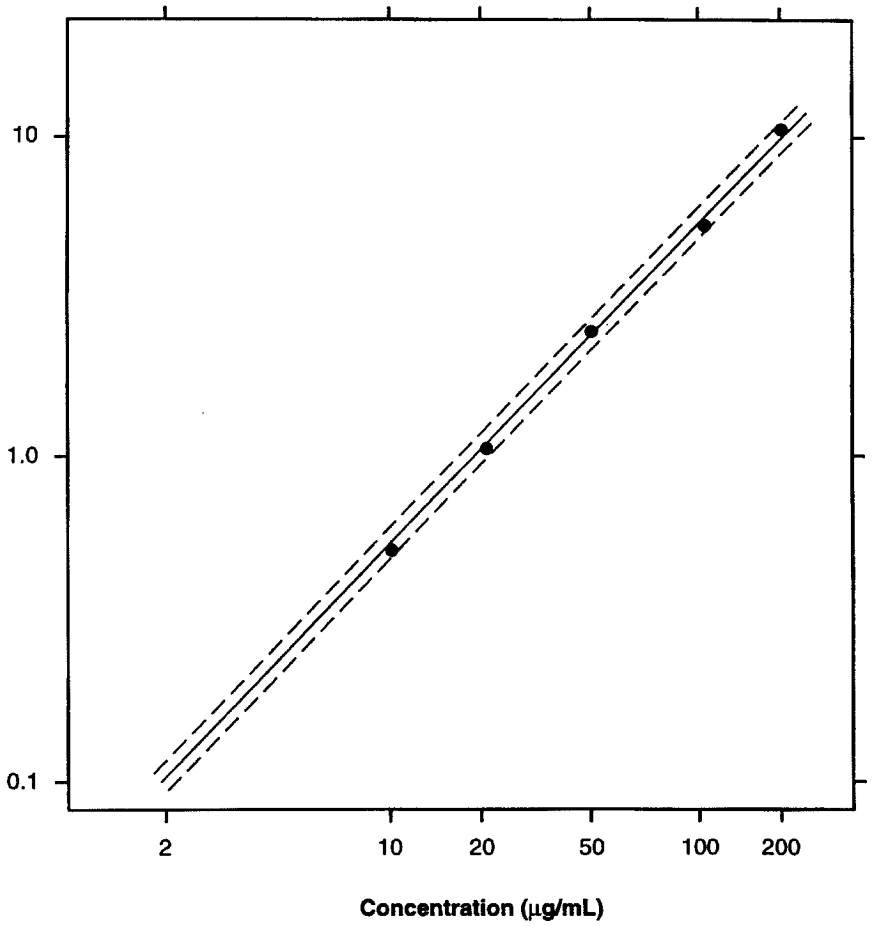

The dotted lines enclose a ±10% error window.

52-020-21A

Figure 1. Relative Response Calibration Curve for Phenol

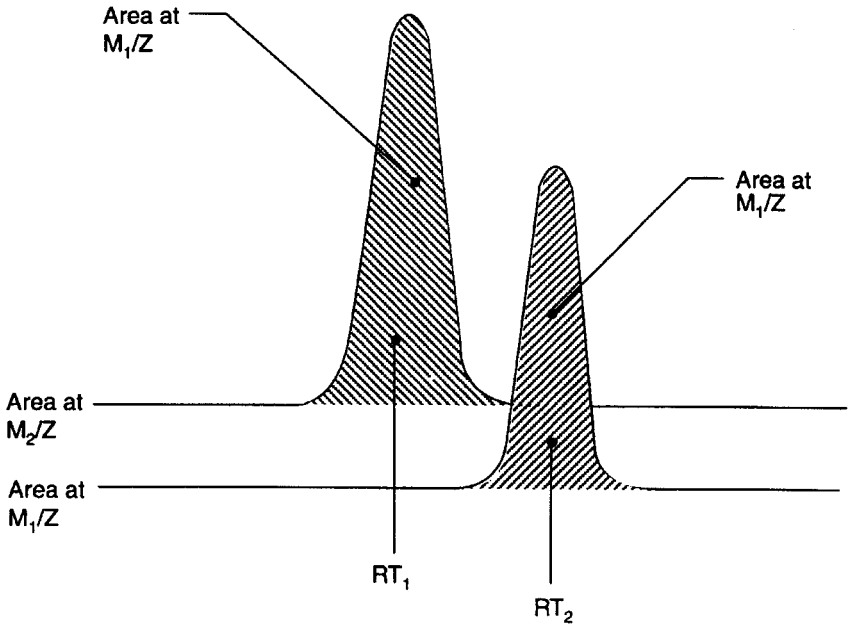

52-020-22A

Figure 2. Extracted Ion-Current Profiles for Chromatographically Resolved Labeled (M_2/Z) and Unlabeld (M_1/Z) Pairs

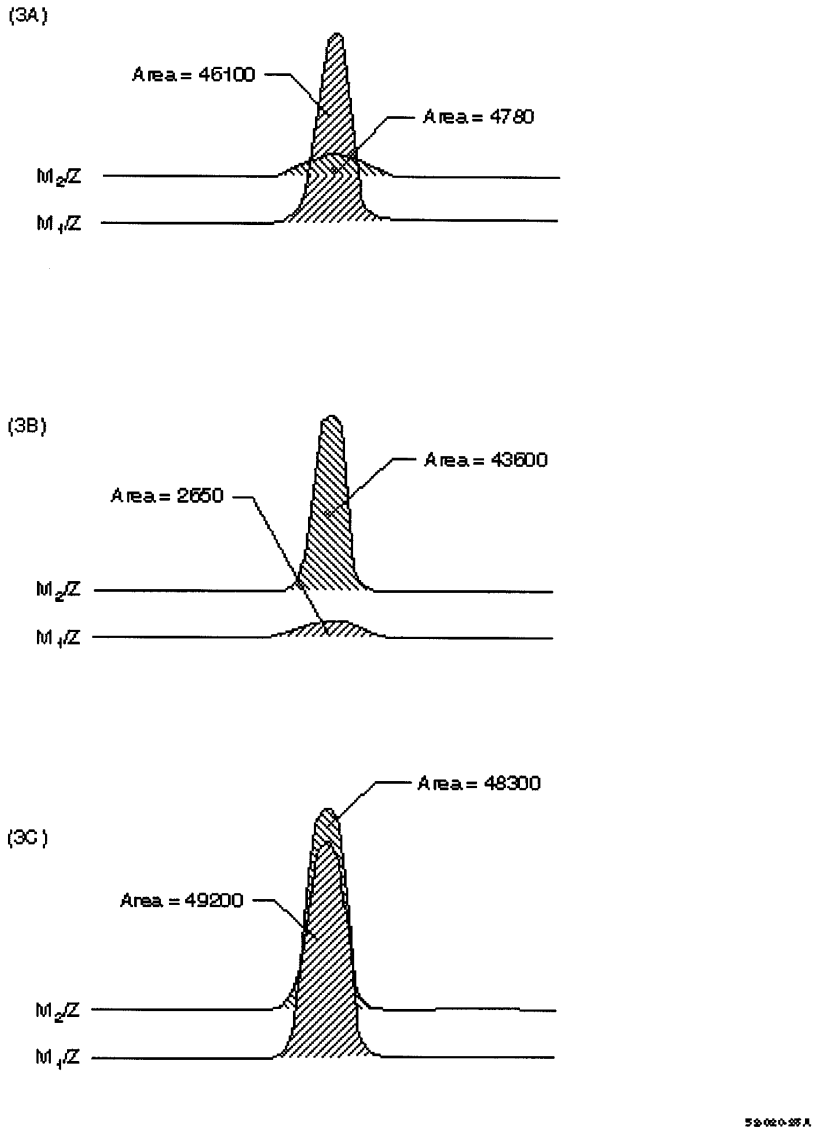

Figure 3. Extracted Ion-Current Profiles for (3A) Unlabeled Compound, (3B) Labeled Compound, and (3C) Equal Mixture of Unlabeled and Labeled Compounds.

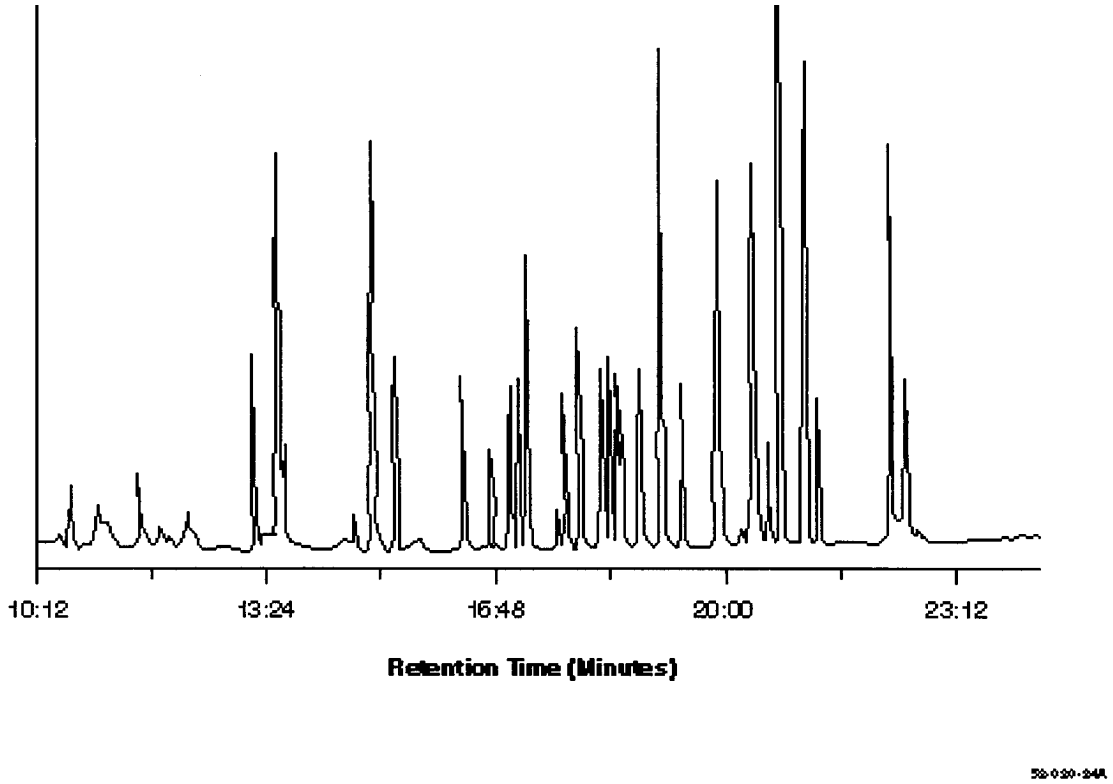

Figure 4. Chromatogram of Chlorophenolics

BILLING CODE 6560–50–C

20.0 Glossary of Definitions and Purposes

These definitions and purposes are specific to this method but have been conformed to common usage as much as possible.

20.1 Units of weight and measure and their abbreviations

20.1.1 Symbols.

°C degrees Celsius
µL microliter
< less than
> greater than
% percent

20.1.2 Alphabetical characters.

cm centimeter
g gram
h hour
ID inside diameter
in. inch
L liter
M Molecular ion
m meter
mg milligram
min minute
mL milliliter
mm millimeter
m/z mass-to-charge ratio
N normal; gram molecular weight of solute divided by hydrogen equivalent of solute, per liter of solution
OD outside diameter
pg picogram
ppb part-per-billion
ppm part-per-million
ppt part-per-trillion
psig pounds-per-square inch gauge
v/v volume per unit volume
w/v weight per unit volume

20.2 Definitions and acronyms (in alphabetical order).

Analyte: A chlorophenolic tested for by this method.

The analytes are listed in Table 1.

Calibration standard (CAL): A solution prepared from a secondary standard and/or stock solutions and used to calibrate the response of the instrument with respect to analyte concentration.

Calibration verification standard (VER): The mid-point calibration standard (CS3) that is used to verify calibration. See Table 4.

Chlorophenolics: collectively, the analytes listed in Table 1.

CS1, CS2, CS3, CS4, CS5: See Calibration standards and Table 4.

Field blank: An aliquot of reagent water or other reference matrix that is placed in a sample container in the laboratory or the field, and treated as a sample in all respects, including exposure to sampling site conditions, storage, preservation, and all analytical procedures. The purpose of the field blank is to determine if the field or sample transporting procedures and environments have contaminated the sample.

GC: Gas chromatograph or gas chromatography.

HRGC: High resolution GC.

IPR: Initial precision and recovery; four aliquots of the diluted PAR standard analyzed to establish the ability to generate acceptable precision and accuracy. An IPR is performed prior to the first time this method is used and any time the method or instrumentation is modified.

K–D: Kuderna-Danish concentrator; a device used to concentrate the analytes in a solvent.

Laboratory blank: See Method blank.

Laboratory control sample (LCS): See Ongoing precision and recovery standard (OPR).

Laboratory reagent blank: See Method blank.

May: This action, activity, or procedural step is neither required nor prohibited.

May not: This action, activity, or procedural step is prohibited.

Method blank: An aliquot of reagent water that is treated exactly as a sample including exposure to all glassware, equipment, solvents, reagents, internal standards, and surrogates that are used with samples. The method blank is used to determine if analytes or interferences are present in the laboratory environment, the reagents, or the apparatus.

Minimum level (ML): The level at which the entire analytical system must give a recognizable signal and acceptable calibration point for the analyte. It is equivalent to the concentration of the lowest calibration standard, assuming that all method-specified sample weights, volumes, and cleanup procedures have been employed.

MS: Mass spectrometer or mass spectrometry.

Must: This action, activity, or procedural step is required.

OPR: Ongoing precision and recovery standard (OPR); a laboratory blank spiked with known quantities of analytes. The OPR is analyzed exactly like a sample. Its purpose is to assure that the results produced by the laboratory remain within the limits specified in this method for precision and recovery.

PAR: Precision and recovery standard; secondary standard that is diluted and spiked to form the IPR and OPR.

Preparation blank: See Method blank.

Primary dilution standard: A solution containing the specified analytes that is purchased or prepared from stock solutions and diluted as needed to prepare calibration solutions and other solutions.

Quality control check sample (QCS): A sample containing all or a subset of the analytes at known concentrations. The QCS is obtained from a source external to the laboratory or is prepared from a source of standards different from the source of calibration standards. It is used to check laboratory performance with test materials prepared external to the normal preparation process.

Reagent water: Water demonstrated to be free from the analytes of interest and potentially interfering substances at the method detection limit for the analyte.

Relative standard deviation (RSD): The standard deviation times 100 divided by the mean.

RF: Response factor. See Section 10.5.1.

RR: Relative response. See Section 10.4.4.

RSD: See Relative standard deviation.

Should: This action, activity, or procedural step is suggested but not required.

Stock solution: A solution containing an analyte that is prepared using a reference material traceable to EPA, the National Institute of Science and Technology (NIST), or a source that will attest to the purity and authenticity of the reference material.

VER: See Calibration verification standard.

[FR Doc. 98–9613 Filed 4–14–98; 8:45 am]

BILLING CODE 6560–50–P

federal register

Wednesday
April 15, 1998

Part III

Environmental Protection Agency

40 CFR Part 63

National Emission Standards for Hazardous Air Pollutants; Proposed Standards for Hazardous Air Pollutants From Chemical Recovery Combustion Sources at Kraft, Soda, Sulfite, and Stand-Alone Semichemical Pulp Mills; Proposed Rule

ENVIRONMENTAL PROTECTION AGENCY

40 CFR Part 63

[AD–FRL–5925–1]

RIN 2060–AD03

National Emission Standards for Hazardous Air Pollutants; Proposed Standards for Hazardous Air Pollutants From Chemical Recovery Combustion Sources at Kraft, Soda, Sulfite, and Stand-Alone Semichemical Pulp Mills

AGENCY: Environmental Protection Agency (EPA).

ACTION: Proposed rule and notice of public hearing.

SUMMARY: This action proposes national emission standards for hazardous air pollutants (NESHAP) for the pulp and paper production source category under section 112 of the Clean Air Act as amended (CAA). The proposed standards focus on reducing hazardous air pollutants (HAP's) from new and existing sources used in chemical recovery processes at kraft, soda, sulfite, and stand-alone semichemical pulp mills. The intent of the proposed standards is to protect the public health and the environment by reducing HAP emissions to the level corresponding to the maximum achievable control technology (MACT). The proposed standards would reduce HAP emissions by about 2,600 megagrams per year (Mg/yr) (2,800 tons per year [tons/yr]). In addition, emissions of criteria pollutants such as particulate matter (PM) and volatile organic compounds (VOC's) would be reduced by about 56,400 Mg/yr (62,100 tons/yr).

DATES: *Comments.* The EPA will accept written comments on the proposed rule until June 15, 1998.

Public Hearing. If requested, EPA will hold a public hearing concerning the proposed rule beginning at 10 a.m. on May 15, 1998 at the EPA Office of Administration Auditorium, Research Triangle Park, North Carolina. Requests to present oral testimony must be made by May 6, 1998.

ADDRESSES: *Requests to Speak at Hearing.* Requests to present oral testimony at the public hearing should be submitted to Ms. Cathy Coats, Minerals and Inorganic Chemicals Group (MD–13), Emission Standards Division, U.S. Environmental Protection Agency, Research Triangle Park, NC 27711, telephone number (919) 541–5422. Persons interested in attending the hearing should call Ms. Coats to verify that a hearing will be held.

Comments. Interested parties may submit written comments (in duplicate, if possible) to Public Docket No. A–94–67 at the following address: U.S. Environmental Protection Agency, Air and Radiation Docket and Information Center, 401 M Street, SW., Washington, DC 20460. The EPA requests that a separate copy of the comments also be sent to the contact person listed below in the **FOR FURTHER INFORMATION CONTACT** section.

Comments may also be submitted electronically by sending electronic mail (e-mail) to: a-and-r-docket@epamail.epa.gov. Electronic comments must be submitted as an ASCII file avoiding the use of special characters and any form of encryption. Comments will also be accepted on diskette in WordPerfect 5.1 or ASCII file format. All comments in electronic form must be identified by the docket number (No. A–94–67). No confidential business information should be submitted through e-mail. Electronic comments may be filed online at many Federal Depository Libraries.

FOR FURTHER INFORMATION CONTACT: Mr. Jeff Telander, Minerals and Inorganic Chemicals Group, Emissions Standards Division (MD–13), U.S. Environmental Protection Agency, Research Triangle Park, North Carolina 27711, telephone number (919) 541–5427.

SUPPLEMENTARY INFORMATION:

Regulated Entities

Entities potentially regulated by this proposed rule are those kraft, soda, sulfite, and stand-alone semichemical pulp mills with chemical recovery processes that involve the combustion of spent pulping liquor. Regulated categories and entities are listed below in Table 1.

TABLE 1.—REGULATED CATEGORIES AND ENTITIES

Category	Examples of regulated entities
Industry	Kraft pulp mills, soda pulp mills, sulfite pulp mills, stand-alone semichemical pulp mills.

Table 1 is not intended to be exhaustive, but rather provides a guide for readers regarding entities likely to be regulated by this action. Table 1 lists the types of entities that EPA is now aware could potentially be regulated by this action. Other types of entities not listed in the table could also be regulated. To determine whether your facility is regulated by this action, you should carefully examine the applicability criteria in § 63.860. If you have questions regarding the applicability of this action to a particular entity, consult the person listed in the preceding **FOR FURTHER INFORMATION CONTACT** section.

Electronically Available Information

The preamble and the regulatory text for this proposed NESHAP for chemical recovery combustion sources at kraft, soda, sulfite, and stand-alone semichemical pulp mills are available on the Technology Transfer Network (TTN), one of EPA's electronic bulletin boards. The TTN provides a forum for technological and regulatory exchange in various areas of air pollution control. The service is free, except for the cost of a phone call. Dial (919) 541–5742 for up to a 14,400 baud rate modem. If more information on the TTN is needed, call the TTN help line at (919) 541–5384.

Docket

The docket (No. A–94–67) is available for public inspection and copying from 8:30 a.m. to noon and from 1 to 3 p.m., Monday through Friday at EPA's Air and Radiation Docket and Information Center, Waterside Mall, Room M–1500 (ground floor), 401 M Street, SW., Washington, DC 20460.

The following documents and other supporting materials related to this rulemaking are available for review in the docket center: Technical Support Document: Chemical Recovery Combustion Sources at Kraft and Soda Pulp Mills (docket entry No. II–A–31); Technical Support Document: Chemical Recovery Combustion Sources at Sulfite Pulp Mills (docket entry No. II–A–28); Profile of U.S. Stand-Alone Semichemical Pulp Mills Memo (docket entry No. II–B–70); Nationwide Baseline HAP Emissions for Combustion Sources at Stand-Alone Semichemical Pulp Mills Memo (docket entry No. II–B–67); Nationwide Costs, Environmental Impacts and Cost-Effectiveness of HAP Control Options for Combustion Sources at Stand-Alone Semichemical Mills Memo (docket entry No. II–B–69); the Nationwide Costs, Environmental Impacts, and Cost-Effectiveness of Regulatory Alternatives for Kraft, Soda, Sulfite, and Semichemical Combustion Sources Memo (docket entry No. II–B–63); the Economic Analysis for the National Emission Standards for Hazardous Air Pollutants for Source Category: Pulp and Paper Production; Effluent Limitations Guidelines, Pretreatment Standards, and New Source Performance Standards: Pulp, Paper, and Paperboard Category—Phase I (docket entry No. II–A–32); the State of Washington PM Data for Kraft Recovery Furnaces, Smelt Dissolving Tanks, and Lime Kilns Memo (docket entry No. II–B–59); and the State of

Washington PM Data for Sulfite Combustion Units Memo (docket entry No. II–B–40). Also, copies of this information may be obtained from the Air Docket upon request by calling (202) 260–7548 or sending a FAX to (202) 260–4000. A reasonable fee may be charged for copies of docket materials.

The information presented in the remainder of this preamble is organized as follows:

I. Statutory Authority
II. Introduction
A. Background
B. NESHAP for Source Categories
C. Health Effects of Pollutants
D. Industry Profile
III. Summary of Proposed Standards
A. Applicability
B. Emission Limits and Requirements
1. PM HAP Standards for Kraft and Soda Pulp Mills
2. Total Gaseous Organic HAP Standards for Kraft and Soda Pulp Mills
3. PM Standards for Sulfite Pulp Mills
4. Total Gaseous Organic HAP Standards for Stand-Alone Semichemical Pulp Mills
C. Performance Test Requirements
D. Monitoring Requirements and Compliance Provisions
E. Recordkeeping and Reporting Requirements
IV. Rationale
A. Selection of Source Category
B. Selection of Emission Points
1. Emission Points—Kraft Pulp Mills
2. Emission Points—Soda Pulp Mills
3. Emission Points—Sulfite Pulp Mills
4. Emission Points—Stand-Alone Semichemical Pulp Mills
C. Selection of Definition of Affected Source
D. Selection of Pollutants
1. PM HAP's
2. Total Gaseous Organic HAP's
3. Hydrochloric Acid (HCl)
E. Determination of Subcategories and MACT Floors
1. MACT Floors—Kraft and Soda Pulp Mills
2. MACT Floors—Sulfite Pulp Mills
3. MACT Floors—Stand-Alone Semichemical Pulp Mills
F. Discussion of Regulatory Alternatives
1. Kraft and Soda Pulp Mills
2. Sulfite Pulp Mills
3. Stand-Alone Semichemical Pulp Mills
G. Selection of Proposed Standards for Existing and New Sources
1. Existing Sources
2. New Sources
H. Selection of Format of the Standards
1. PM HAP Standards for Kraft and Soda Pulp Mills
2. PM Standards for Sulfite Pulp Mills
3. Total Gaseous Organic HAP Standard for Kraft and Soda Pulp Mills
4. Total Gaseous Organic HAP Standard for Stand-Alone Semichemical Pulp Mills
I. Selection of Monitoring Requirements
J. Selection of Test Methods
K. Selection of Reporting and Recordkeeping Requirements
L. Relationship to Other Regulations
1. Noncombustion Source Rule and Chemical Recovery Combustion Source Rule
2. NSPS (subpart BB of part 60) and Chemical Recovery Combustion Source Rule
3. New Source Review/Prevention of Significant Deterioration Applicability
M. Solicitation of Comments
V. Impacts of Proposed Standards
A. Number of Impacted Sources
B. Environmental Impacts
C. Energy Impacts
D. Cost Impacts
E. Economic Impacts
F. Benefits Analysis
VI. Administrative Requirements
A. Docket
B. Public Hearing
C. Executive Order 12866
D. Enhancing the Interdepartmental Partnership Under Executive Order 12875
E. Unfunded Mandates Reform Act
F. Regulatory Flexibility
G. Paperwork Reduction Act
H. Clean Air Act

I. Statutory Authority

The statutory authority for this proposal is provided by sections 101, 112, 114, 116, and 301 of the Clean Air Act, as amended (42 U.S.C. 7401, 7412, 7414, 7416, and 7601).

II. Introduction

A. Background

On February 23, 1978, EPA promulgated new source performance standards (NSPS) to limit emissions of PM and total reduced sulfur (TRS) compounds from new, modified, and reconstructed kraft pulp mills under authority of section 111 of the Act (43 FR 7568). In addition, EPA issued retrofit guidelines in 1979 for control of TRS emissions at existing kraft pulp mills not subject to the NSPS. The NSPS for kraft pulp mills limit TRS emissions from recovery furnaces, smelt dissolving tanks (SDT's), lime kilns, digesters, multiple effect evaporators, black liquor oxidation (BLO) systems, brownstock washers, and condensate strippers that were constructed, modified, or reconstructed after September 24, 1976. The standards also limit PM emissions from recovery furnaces, SDT's, and lime kilns that were constructed, modified, or reconstructed after September 24, 1976. As required under section 111(a) of the Act, these standards reflected the application of the best technological system of continuous emission reduction that the Administrator determined had been adequately demonstrated (taking into consideration the cost of achieving such emission reduction, and any nonair quality health and environmental impacts and energy requirements).

Revisions to these standards were promulgated on May 20, 1986 (51 FR 18538). The revisions exempted BLO systems from the TRS standards; revised the existing TRS limit and format of the standard for SDT's; deleted the requirement to monitor the combustion temperature in lime kilns, power boilers, and recovery furnaces; changed the frequency of excess emission reports from quarterly to semiannually; and exempted diffusion washers from the TRS standard for brownstock washers. The revisions also required that monitored emissions be recorded and specified the conditions [§ 60.284(e)] under which excess emissions would not be deemed a violation of § 60.11(d). Today's action does not revise or change the TRS requirements of the NSPS. However, today's standards do include PM emission limits, as a surrogate for measuring PM HAP emissions, for combustion sources (existing and new) in the chemical recovery area of the mill.

On December 17, 1993, EPA proposed (1) effluent limitations guidelines and standards for the control of wastewater pollutants for the pulp and paper industry and (2) NESHAP for noncombustion sources in the pulp and paper industry (58 FR 66078), otherwise referred to as ''MACT I.'' The emission points covered in the proposed NESHAP for noncombustion sources were limited to process units in the pulping and bleaching processes (e.g., digesters, bleaching towers, and associated tanks) and in the associated wastewater collection and treatment systems at mills that chemically pulp wood fiber using kraft, sulfite, soda, or semichemical methods. In March 1996, EPA proposed to include for regulation additional noncombustion operations and mills not covered under the December 17, 1993 proposal (e.g., mechanical pulping, pulping of secondary fiber by nonchemical means, nonwood pulping, and paper machines), otherwise referred to as ''MACT III'' (61 FR 9383). The NESHAP for noncombustion sources and the effluent guidelines are being promulgated as part of today's integrated rule, ''NESHAP for Source Category: Pulp and Paper Production; Effluent Limitations Guidelines, Pretreatment Standards, and New Source Performance Standards: Pulp, Paper, and Paperboard Category.'' This proposed NESHAP for chemical recovery combustion sources at kraft, soda, sulfite and stand-alone semichemical pulp mills, otherwise referred to as ''MACT II,'' does not revise or change the requirements of the

NESHAP for noncombustion sources that is being promulgated today.

B. NESHAP for Source Categories

Section 112 of the Act provides a list of 189 HAP's and directs EPA to develop rules to control HAP emissions from both new and existing major sources. The Act requires that the rules be established by categories of emission sources considering all HAP's emitted, rather than establishing rules based on the emission of a single pollutant from a source category. The statute also requires that the standards reflect the maximum degree of reduction in emissions of HAP's that is achievable, taking into consideration the cost of achieving such emission reduction and any nonair quality health and environmental impacts and energy requirements. This level of control is commonly referred to as MACT.

In addition, the Act sets out specific criteria to be considered for establishing a minimum level of control and criteria (incremental cost, energy impacts, etc.) for evaluating control options more stringent than the minimum level of control. This minimum level of control is commonly referred to as the MACT ''floor.'' The MACT floor for new sources, as specified by the Act, is ''the emission control that is achieved in practice by the best controlled similar source.'' The MACT floor for existing sources, as specified by the Act, is the average emission limitation achieved by the best performing 12 percent of existing sources in each category or subcategory of 30 or more sources (CAA section 112(d)(3)). For smaller categories or subcategories, the Act specifies that standards shall not be less stringent than the average emission limitation achieved by the best performing five sources in the category or subcategory. These floor determinations are based on data available to the Administrator at the time the standards are developed. The statutory provisions do not limit how the standard is set, beyond requiring that it be applicable to all sources in a category or subcategory and at least as stringent as the MACT floor. The emission standards are to be reviewed and revised as necessary no less often than every 8 years. Also, EPA may later promulgate more stringent standards to address any unacceptable health or environmental risk that remains after the imposition of controls resulting from today's standards (CAA section 112(f)).

C. Health Effects of Pollutants

The Clean Air Act was created in part ''to protect and enhance the quality of the nation's air resources so as to promote the public health and welfare and the productive capacity of its population'' (CAA section 101(b)(1)). Title III of the Act establishes a technology-based control program to reduce stationary source emissions of HAP's. The goal of section 112(d) is to apply such control technology to reduce emissions and thereby reduce the hazard of HAP's emitted from stationary sources.

This proposed rule is technology-based (i.e., based on MACT). The MACT strategy avoids dependence on a risk-based approach as a pre-requisite for regulating air toxics. Such risk assessments are limited by incomplete information on what HAP's are emitted, what level of emissions is occurring, what health and safety benchmarks are available to assess risk, what health effects may be caused by certain pollutants, and how best to model these effects, among other things. Because of these issues, a quantitative risk assessment of potential effects from all of the HAP's emitted from pulp and paper combustion sources is not included in this rulemaking. However, as described in section IV.D.3.d of this preamble, an exposure assessment was conducted to determine if current emissions of hydrogen chloride (HCl) from pulp and paper combustion sources result in exposures that provide an ample margin of safety.

The EPA does recognize that the degree of adverse effects to health can range from mild to severe. The extent and degree to which health effects may be experienced is dependent upon (1) ambient concentrations observed in the area, (2) duration of exposures, and (3) characteristics of exposed individuals (e.g., genetics, age, pre-existing health conditions, and lifestyle) which vary significantly with the population. Some of these factors are also influenced by source-specific characteristics (e.g., emission rates and local meteorological conditions) as well as pollutant-specific characteristics.

Available emission data, collected during development of this proposed rule, show that metals, various organic compounds, and HCl are the most significant HAP's emitted from pulp and paper combustion sources. Following is a summary of the potential health and environmental effects associated with exposures, at some level, to these emitted pollutants.

Almost all metals appearing on the section 112(b) list are emitted from pulp and paper combustion sources. These metals can cause a range of effects, including mucous membrane effects (e.g., bronchitis, decreased lung function), gastrointestinal effects, nervous system disorders (from cognitive effects to coma or even death), skin irritation, and reproductive and developmental disorders. Additionally, several of the metals accumulate in the environment and in the human body. Cadmium, for example, is a cumulative pollutant that can cause kidney effects after cessation of exposure. Similarly, the onset of effects from beryllium exposure may be delayed by months to years. Further, some of the metal compounds have been classified by EPA as known (e.g., arsenic and chromium (VI)) or probable (e.g., cadmium and beryllium) human carcinogens.

All forms of mercury, a volatile metal, may be characterized as quite toxic, with different health effects associated with different forms of the pollutant. Methyl mercury is the most toxic form of mercury to which humans and wildlife generally are exposed. Exposure to methyl mercury occurs primarily through the aquatic food chain. The target organ for methyl mercury toxicity in humans is the nervous system. The range of neurotoxic effects can vary from subtle decrements in motor skills and sensory ability to tremors, inability to walk, convulsions, and death. Exposure to inorganic mercury is associated with renal impairment. Some forms of mercury have also been classified as possible human carcinogens. Exposure to mercury compounds can also cause effects in plants, birds, and nonhuman mammals. Reproductive effects are the primary concern for avian mercury poisoning.

Organic compounds emitted from pulp and paper combustion sources include acetaldehyde, benzene, formaldehyde, methyl ethyl ketone, methyl isobutyl ketone, methanol, phenol, styrene, toluene, and xylenes. These organic compounds have a range of potential health effects associated with exposure at some level. Some of the effects associated with short-term inhalation exposure to these pollutants are similar and include irritation of the eyes, skin, and respiratory tract in humans; central nervous system effects (e.g., drowsiness, dizziness, headaches, depression, nausea, irregular heartbeat); reproductive and developmental effects; and neurological effects. Exposure to benzene and methyl isobutyl ketone at extremely high concentrations may lead to respiratory paralysis, coma, or death. Human health effects associated with long-term inhalation exposure to the organic compounds listed above may include mild symptoms such as nausea, headache, weakness, insomnia, intestinal pain, and burning eyes; effects on the central nervous system; disorders of the blood; toxicity to the immune

system; reproductive disorders in women (e.g., increased risk of spontaneous abortion); developmental effects; gastrointestinal irritation; liver injury; and muscular effects.

In addition to the noncancer effects described above, some of the organic HAP's emitted from pulp and paper combustion sources have been classified by EPA as either known (e.g., benzene) or probable (e.g., acetaldehyde and formaldehyde) human carcinogens.

Hydrogen chloride is an inorganic HAP which is highly corrosive to the eyes, skin, and mucous membranes. Short-term inhalation of HCl by humans may cause coughing, hoarseness, inflammation and ulceration of the respiratory tract, as well as chest pain and pulmonary edema if exposure exceeds threshold concentrations. Long-term occupational exposure of humans to HCl has been reported to cause inflammation of the stomach, skin, and lungs, and photosensitization.

The health and environmental effects associated with exposure to PM and ozone are described in EPA's Criteria Documents, which support the national ambient air quality standards (EPA 1996, ''Air Quality Criteria for Ozone and Related Photochemical Oxidants,'' EPA–600/P–93–004, RTP, NC; EPA 1996, ''Air Quality Criteria for Particulate Matter,'' EPA–600/P–95–001, RTP, NC). Briefly, PM emissions have been associated with aggravation of existing respiratory and cardiovascular disease and increased risk of premature death. Volatile organic compounds are precursors to the formation of ozone in the ambient air. At ambient levels, human laboratory and community studies have shown that ozone is responsible for the reduction of lung function, respiratory symptoms (e.g., cough, chest pain, throat and nose irritation), increased hospital admissions for respiratory causes, and increased lung inflammation. Animal studies have shown increased susceptibility to respiratory infection and lung structure changes.

Studies have shown that exposure to ozone can cause foliar injury and disrupt carbohydrate production and distribution in plants. The reduction in carbohydrate production and allocation can lead to reduced root growth, reduced biomass or yield production, reduced plant vigor (which can increase susceptibility to attack from insects and disease and damage from cold), and diminished ability to successfully compete with more tolerant species. These effects have been observed in native vegetation in natural ecosystems and in a selected number of commercial trees and agricultural crops.

D. Industry Profile

There are currently 122 kraft, 2 soda, 15 sulfite, and 14 stand-alone semichemical pulp mills in the United States. The majority (52 percent) of kraft mills are located in the Southeastern United States. The two soda pulp mills are located in Tennessee and Pennsylvania. The majority of sulfite mills (67 percent) are located in Washington and Wisconsin. Half of all stand-alone semichemical pulp mills are located in the Midwestern United States.

The kraft process is the dominant pulping process in the United States. The kraft and soda processes account for approximately 82 percent of all domestic pulp production; sulfite and stand-alone semichemical processes account for approximately 2 and 6 percent of the domestic pulp production, respectively.

Numerous HAP compounds are emitted from combustion sources in the chemical recovery area at kraft, soda, sulfite, and stand-alone semichemical pulp mills. The HAP compounds emitted in the largest quantities are methanol and HCl. Methanol and HCl account for approximately 70 percent of the total HAP's emitted from the chemical recovery area.

All of the kraft, soda, sulfite, and stand-alone semichemical pulp mills are believed to be major HAP emission sources (i.e., emissions greater than or equal to 9.1 Mg/yr [10 tons/yr] for an individual HAP or 23 Mg/yr [25 tons/yr] for total HAP's). In most cases, HAP emissions from combustion sources in the chemical recovery area alone are sufficient to characterize these mills as major sources.

III. Summary of Proposed Standards

A. Applicability

The proposed standards apply to all existing and new kraft, soda, sulfite, and stand-alone semichemical pulp mills with chemical recovery processes that involve the combustion of spent pulping liquor. Specifically, the sources that are regulated by today's proposed standards are—

(1) Nondirect contact evaporator (NDCE) recovery furnaces, direct contact evaporator (DCE) recovery furnace systems, SDT's, and lime kilns at kraft and soda pulp mills;

(2) Sulfite combustion units at sulfite pulp mills; and

(3) Semichemical combustion units at stand-alone semichemical pulp mills.

All existing kraft and soda pulp mills have chemical recovery processes that involve the combustion of spent pulping liquor. However, several existing sulfite and stand-alone semichemical pulp mills do not recover pulping chemicals by combusting spent liquor. Three of the 15 sulfite mills use a calcium-based sulfite process and do not have chemical recovery combustion units and, thus, would not be impacted by this proposed rule. One of the 14 stand-alone semichemical pulp mills burns spent liquor in a power boiler and does not have chemical recovery; therefore, that mill also would not be impacted by this proposed rule.

B. Emission Limits and Requirements

Today's proposed standards would regulate PM HAP emissions and/or total gaseous organic HAP emissions for chemical recovery combustion sources in the pulp and paper source category. The proposed emission standards are summarized in Table 2.

TABLE 2.—SUMMARY OF PROPOSED EMISSION STANDARDS [a]

Sub-category	Emission point	PM HAP standard		Alternate PM HAP standard ("bubble")		Total gaseous organic HAP standard	
		Existing	New	Existing	New	Existing	New
Kraft and soda.	Recovery furnaces (NDCE and DCE). Smelt dissolving tanks. Lime kilns	PM ≤ 0.10 gr/dscm (0.044 gr/dscf) at 8% O_2 OR PM HAP ≤ 1.00E–03 kg/Mg (2.01E–03 lb/ton) BLS. PM ≤ 0.10 kg/Mg (0.20 lb/ton) BLS OR PM HAP ≤ 6.20E–05 kg/Mg (1.24E–04 lb/ton) BLS. PM ≤ 0.15 g/dscm (0.067 gr/dscf) at 10% O_2 OR PM HAP ≤ 6.33E–03 kg/Mg (1.27E–02 lb/ton) CaO.	PM ≤ 0.034 g/dscm (0.015 gr/dscf) at 8% O_2. PM ≤ 0.06 kg/Mg (0.12 lb/ton) BLS. PM ≤ 0.023 g/dscm (0.010 gr/dscf) at 10% O_2.	Mill-specific PM or PM HAP emission limit [kg/Mg (lb/ton) BLS] based on calculated value of the sum of the individual emission limits for recovery furnaces, smelt dissolving tanks, and lime kilns. See equations 1 and 2 in section III.B.1.	No "bubble" alternate standard for new sources.	No standard .. No standard [b] No standard [b]	Total gaseous organic HAP ≤ 0.012 kg/Mg (0.025 lb/ton) BLS (as measured by methanol). No standard [b]. No standard [b].
Sulfite	Sulfite combustion units.	PM ≤ 0.092 g/dscm (0.040 gr/dscf) at 8% O_2.	PM ≤ 0.046 g/dscm (0.020 gr/dscf) at 8% O_2.	Not applicable	Not applicable	No standard [b]	No standard [b].
Stand-alone semi-chemical.	Semichemical combustion units recovery combustion units.	No standard	No standard ..	Not applicable	Not applicable	Total gaseous organic HAP ≤ 1.49 kg/Mg (2.97 lb/ton) BLS (as measured by THC) OR 90% reduction.	Total gaseous organic HAP ≤ 1.49 kg/Mg (2.97 lb/ton) BLS (as measured by THC) OR 90% reduction.

[a] BLS = black liquor solids; CaO = calcium oxide (lime); THC = total hydrocarbons; gr/dscf = grains per dry standard cubic foot; g/dscm = grams per dry standard cubic meter; kg/Mg = kilograms per megagram; lb/ton = pounds per ton; O_2 = oxygen.

[b] Emissions of total gaseous organic HAP's from these sources are regulated as part of the NESHAP for noncombustion sources at pulp and paper mills.

Hazardous air pollutants are proposed only for existing recovery furnaces, SDT's, and lime kilns at kraft and soda pulp mills. Limits for total gaseous organic HAP emissions are proposed for new kraft and soda recovery furnaces and existing and new semichemical combustion units. Either methanol or total hydrocarbons (THC), depending on the subcategory, is used as a surrogate for total gaseous organic HAP emissions. The emission standards for each subcategory are discussed in the following sections by the pollutant regulated.

1. PM HAP Standards for Kraft and Soda Pulp Mills

Today's rule proposes PM HAP emission limits for existing recovery furnaces, SDT's, and lime kilns at kraft and soda pulp mills. In addition, PM emission limits are proposed as a surrogate for PM HAP emission limits for both new and existing affected sources at kraft and soda pulp mills. The EPA is using the term ''PM HAP'' in this preamble to refer to the standards which can be measured either on a total PM basis or on a HAP component of PM basis. For existing kraft and soda recovery furnaces, SDT's, and gas-fired lime kilns, the proposed PM emission limits are the same as the New Source Performance Standards for Kraft Pulp Mills (43 FR 7568). Under today's proposed standards, existing oil-fired lime kilns would be subject to a more stringent PM standard than the NSPS requirements.

The proposed standards also would allow the use of a ''bubble compliance alternative'' for determining compliance with the PM HAP standard for existing sources at kraft and soda pulp mills. The bubble compliance alternative would allow mills to set PM or PM HAP emission limits for each existing affected source at the mill such that, if these limits are met, the total emissions from all existing affected sources would be less than or equal to a mill-specific bubble limit. This mill-specific bubble limit is calculated based on the proposed emission limits (referred to as reference concentrations or reference emission rates) for each affected source and mill-specific gas flow rates and process rates. Equation 1, below, would be used to calculate the bubble limit based on PM emissions.

$$EL_{PM} = [(C_{ref,RF})(Q_{RFtot}) + (C_{ref,LK})(Q_{LKtot})](F1)/(BLS_{tot}) + ER1_{ref,SDT} \quad \text{Eq. (1)}$$

Where:

EL_{PM}=overall PM emission limit for all existing affected sources at the kraft or soda pulp mill, kg/Mg (lb/ton) of black liquor solids fired.

$C_{ref,RF}$=reference concentration of 0.10 g/dscm (0.044 gr/dscf) corrected to 8 percent oxygen for existing kraft or soda recovery furnaces.

Q_{RFtot}=sum of the average gas flow rates measured during the performance test from all existing recovery furnaces at the kraft or soda pulp mill, dry standard cubic meters per minute (dscm/min) (dry standard cubic feet per minute [dscf/min]).

$C_{ref,LK}$=reference concentration of 0.15 g/dscm (0.067 gr/dscf) corrected to 10 percent oxygen for existing kraft or soda lime kilns.

Q_{LKtot}=sum of the average gas flow rates measured during the performance test from all existing lime kilns at the kraft or soda pulp mill, dscm/min (dscf/min).

F1=conversion factor, 1.44 minutes•kilogram/day•gram (min•kg/d•g) (0.206 minutes•pound/day•grain [min•lb/d•gr]).

BLS_{tot}=sum of the average black liquor solids firing rates of all existing recovery furnaces at the kraft or soda pulp mill measured during the performance test, megagrams per day (Mg/d) (tons per day [tons/d]) of black liquor solids fired.

$ER1_{ref,SDT}$=reference emission rate of 0.10 kg/Mg (0.20 lb/ton) of black liquor solids fired for existing kraft or soda smelt dissolving tanks.

Equation 2, below, would be used to calculate the total bubble limit based on PM HAP emissions.

$$EL_{PMHAP} = ER_{ref,RF} + (ER_{ref,LK})(CaO_{tot}/BLS_{tot}) + ER2_{ref,SDT} \quad \text{Eq. (2)}$$

Where:

EL_{PMHAP}=overall PM HAP emission limit for all existing affected sources at the kraft or soda pulp mill, kg/Mg (lb/ton) of black liquor solids fired.

$ER_{ref,RF}$=reference emission rate of 1.00E–03 kg/Mg (2.01E–03 lb/ton) of black liquor solids fired for existing kraft or soda recovery furnaces.

$ER_{ref,LK}$=reference emission rate of 6.33E–03 kg/Mg (1.27E–02 lb/ton) of CaO produced for existing kraft or soda lime kilns.

CaO_{tot}=sum of the average lime production rates for all existing lime kilns at the kraft or soda pulp mill measured as CaO during the performance test, Mg CaO/d (ton CaO/d).

BLS_{tot}=sum of average black liquor solids firing rates of all existing recovery furnaces at the kraft or soda pulp mill measured during the performance test, Mg/d (ton/d) of black liquor solids fired.

$ER2_{ref,SDT}$=reference emission rate of 6.20E–05 kg/Mg (1.24E–04 lb/ton) of black liquor solids fired for existing kraft or soda smelt dissolving tanks.

Owners or operators that choose to comply with the PM HAP standards using the proposed bubble compliance alternative would be allowed to meet either the PM bubble limit determined in Equation 1 or the PM HAP bubble limit determined in Equation 2, but would not be required to meet both bubble limits. The proposed bubble compliance alternative would not be applicable to new sources. All new affected sources at kraft and soda pulp mills would be required to meet the individual emission limitations set for those sources. Also, owners or operators of existing sources subject to the NSPS for kraft pulp mills would be required to continue to meet the PM emission limits of that rule, regardless of which option they choose for complying with today's PM HAP standard.

Owners or operators that choose to comply with the PM HAP standards using the proposed bubble compliance alternative would be required to submit preliminary emission limits to the applicable permitting authority for approval for each existing kraft or soda recovery furnace, SDT, and lime kiln at the mill. Before the preliminary PM or PM HAP emission limits would be approved, the owner or operator would be required to submit documentation demonstrating that if the preliminary emission limits for each emission source are met, the entire group of affected sources would be in compliance with the mill-wide allowable emission level. The allowable emission level would be determined from the applicable bubble equation using the reference concentrations and reference emission rates for each emission source and source-specific factors for exhaust gas flow rates and process rates. Once approved by the applicable permitting authority, the emission limits would be incorporated in the operating permit for the mill. Thereafter, the owner or operator of the kraft or soda pulp mill would demonstrate compliance with the standards by demonstrating that each recovery furnace, SDT, and lime kiln emitted less than or equal to the approved emission limit for that source. In addition, the PM emission limits for any existing recovery furnace, SDT, and lime kiln subject to the NSPS for kraft pulp mills must be at least as stringent as the PM emission limits established in the NSPS. An example of how the bubble compliance alternative can be used to establish emission limits for affected sources at an example mill is provided in the docket (docket entry No. II–B–75).

With one exception, owners or operators that choose to comply with the PM HAP standards using the proposed bubble compliance alternative must include all existing sources in the bubble. Any existing affected source that can be classified as a stand-by unit (i.e., a source that operates for less than 6,300 hours during any calendar year) could not be included as part of a bubble. Owners or operators of stand-by units must accept either the proposed PM or proposed PM HAP emission limits shown in Table 2 for those units. The EPA requests comments on the proposal to exclude stand-by units from the proposed bubble compliance alternative. Some have argued that stand-by units—especially units operating less than 20 percent of the year—may be relatively expensive to control. Thus, inclusion of stand-by units within a compliance bubble may yield important cost savings by allowing a more stringent control of other units to offset the relatively high cost emissions from the stand-by unit. The EPA also requests comment on the proposed definition of a stand-by unit as a unit operating less than 6,300 hours in a calendar year.

2. Total Gaseous Organic HAP Standards for Kraft and Soda Pulp Mills

There are no standards under the proposed rule for total gaseous organic

HAP's for existing NDCE recovery furnaces or DCE recovery furnace systems. All new recovery furnaces at kraft and soda pulp mills would be required to meet a total gaseous organic HAP limit, as measured by methanol, of 0.012 kg/Mg (0.025 lb/ton) of black liquor solids fired.

3. PM Standards for Sulfite Pulp Mills

Existing sulfite combustion units would be required to meet a PM emission limit of 0.092 g/dscm (0.040 gr/dscf) corrected to 8 percent oxygen. New sulfite combustion units would be required to meet a PM emission limit of 0.046 g/dscm (0.020 gr/dscf) corrected to 8 percent oxygen.

4. Total Gaseous Organic HAP Standards for Stand-Alone Semichemical Pulp Mills

All existing and new stand-alone semichemical pulp mills with chemical recovery combustion units would be required to reduce total gaseous organic HAP emissions (measured as THC) from these units by 90 percent, or meet a total gaseous organic HAP emission limit (measured as THC) of 1.49 kg/Mg (2.97 lb/ton) of black liquor solids fired.

C. Performance Test Requirements

The following discussion identifies the test methods to be used for compliance determinations.

Test Method 5, ''Determination of Particulate Emissions from Stationary Sources'' (40 CFR part 60, appendix A)—in conjunction with either the integrated sampling techniques of Test Method 3, ''Gas Analysis for the Determination of Dry Molecular Weight'' (40 CFR part 60, appendix A) or Test Method 3A, ''Determination of Oxygen and Carbon Dioxide Concentrations in Emissions from Stationary Sources'' (40 CFR part 60, appendix A)—is the test method for determining compliance with the PM emission standards for new and existing kraft and soda recovery furnaces, SDT's, and lime kilns and for new and existing sulfite combustion units. Test Method 17, ''Determination of Particulate Emissions from Stationary Sources (In-Stack Filtration Method)'' may be used as an alternative to Test Method 5 if a constant value of 0.009 g/dscm (0.004 gr/dscf) is added to the results of Test Method 17 and the stack temperature is no greater than 205 degrees Centigrade (°C) [400 degrees Fahrenheit (°F)].

Test Method 29, ''Determination of Metals Emissions from Stationary Sources'' (40 CFR part 60, appendix A) is the test method for determining compliance with the PM HAP emission standards for existing kraft and soda recovery furnaces, SDT's, and lime kilns. Test Method 29 also may be used as an alternative to Test Method 5 for measuring PM emissions. The Agency also will allow operators or owners the option of measuring all of the PM HAP's (except mercury) with Test Method 29 and making a separate measurement of the mercury using Test Method 101A, ''Determination of Particulate and Gaseous Mercury Emissions from Sewage Sludge Incinerators'' (40 CFR part 61, appendix A).

Test Method 308, ''Procedure for Determination of Methanol Emissions from Stationary Sources'' is being promulgated today as part of the final NESHAP for noncombustion sources at pulp and paper mills and is the test method for determining compliance with the total gaseous organic HAP emission limit for new kraft and soda NDCE recovery furnaces that are not equipped with dry electrostatic precipitator (ESP) systems and for DCE recovery furnace systems.

Test Method 25A, ''Determination of Total Gaseous Organic Concentration using a Flame Ionization Analyzer'' (40 CFR part 60, appendix A) is the test method for determining compliance with the total gaseous organic HAP emission limit for new and existing combustion sources at stand-alone semichemical pulp mills.

D. Monitoring Requirements and Compliance Provisions

Each owner or operator of an affected source would be required to install, operate, calibrate, and maintain a continuous monitoring system for each affected source. The owner or operator also would be required to establish a range of values for each operating parameter (associated with a process operation or with an emission control device) to be monitored based upon values recorded during the initial performance test or during qualifying previous performance tests using the required test methods. If values from previous performance tests are used to establish the operating parameter range, the owner or operator would be required to certify that the control devices and processes had not been modified subsequent to the testing upon which the data used to establish the operating ranges were obtained. The owner or operator could conduct multiple performance tests to establish ranges of operating parameters. The owner or operator also could establish expanded or replacement ranges during subsequent performance tests. An exceedance of the operating parameters would occur when the measured operating parameter levels, averaged over a specified time period, are outside the established range for a predetermined duration. However, with the exception of opacity exceedances, no more than one exceedance would be attributed to an affected source during any given 24-hour period. The following paragraphs describe: (1) The operating parameters to be monitored, (2) the averaging periods and frequency with which these parameters should be monitored, (3) when corrective action is required to return operating parameters to levels that are within the established range, and (4) when operating parameter exceedances constitute a violation of the standards.

Owners or operators of existing kraft or soda recovery furnaces that are equipped with an ESP for PM or PM HAP control would be required to install, calibrate, maintain, and operate continuous opacity monitoring systems (COMS). The COMS would be required to perform at least one cycle of sampling and analysis for each successive 10-second period and one cycle of data recording for each successive 6-minute period. If 10 consecutive 6-minute average values of opacity exceed 20 percent, the owner or operator would be required to initiate the corrective actions contained in the mill's startup, shutdown, and malfunction (SSM) plan. A violation would occur when 6 percent of the 6-minute average opacity values recorded during any 6-month reporting period are greater than 35 percent.

Owners or operators of new kraft or soda recovery furnaces and new or existing kraft or soda lime kilns that are equipped with ESP's for PM or PM HAP control would also be required to install, calibrate, maintain, and operate COMS. The COMS would be required to perform at least one cycle of sampling and analysis for each successive 10-second period and one cycle of data recording for each successive 6-minute period. If 10 consecutive 6-minute average values of opacity are greater than 20 percent, the owner or operator would be required to initiate the corrective actions contained in the facility's SSM plan. A violation would occur when 6 percent of the 6-minute average opacity values within any 6-month reporting period are greater than 20 percent.

Owners or operators using wet scrubbers to meet the PM or PM HAP emission limits for any kraft or soda recovery furnace, smelt dissolving tank, or lime kiln or the PM limit for sulfite combustion units would be required to install, calibrate, maintain, and operate a continuous monitoring system capable of determining and permanently recording the pressure drop and

scrubbing liquid flow rate at least once for each successive 15-minute period. If any 3-hour average of the pressure drop or scrubbing liquid flow rate falls outside the established range, the owner or operator would be required to initiate the corrective actions included in the facility's SSM plan. A violation would occur when six 3-hour average values of either parameter are outside the established range during any 6-month reporting period.

Owners or operators using regenerative thermal oxidizers (RTO's) to comply with the total gaseous organic HAP emission standard for chemical recovery combustion units at stand-alone semichemical mills would be required to establish a minimum RTO operating temperature that indicates (1) at least a 90 percent reduction in HAP emissions (measured as THC) or (2) outlet HAP emissions (measured as THC) of less than or equal to 1.49 kg/Mg (2.97 lb/ton) of black liquor solids. To ensure ongoing compliance, the owner or operator would be required to install, calibrate, maintain, and operate a monitoring system to measure and record the RTO operating temperature for each successive 15-minute period. If any 1-hour average of the operating temperature falls below the minimum established temperature, the owner or operator would be required to initiate the corrective actions contained in the facility's SSM plan. A violation would occur when any 3-hour average of the RTO operating temperature falls below the minimum established temperature.

The owner or operator of an affected source that uses a wet scrubber, ESP, or RTO to comply with today's standards may monitor alternative operating parameters subject to prior written approval by the applicable permitting authority.

The owner or operator of an affected source that is complying with today's proposed standards through operational changes or by a control device other than those described above would be required to submit a plan proposing parameters to be monitored, parameter ranges, and monitoring frequencies to be used to determine ongoing compliance, subject to approval by the applicable permitting authority. If any 3-hour average value of a monitored parameter falls outside the established range, the owner or operator would be required to initiate the corrective actions included in the facility's SSM plan. A violation would occur when six 3-hour average values of a monitored parameter are outside the established range during any 6-month reporting period.

Owners or operators complying with the total gaseous organic HAP standard for new kraft and soda recovery furnaces through the use of an NDCE recovery furnace equipped with a dry ESP system would not be required to perform any continuous parameter monitoring for gaseous organic HAP's; however, each owner or operator would be required to maintain onsite a certification statement signed by a responsible mill official that an NDCE recovery furnace equipped with a dry ESP system is in use.

E. Recordkeeping and Reporting Requirements

In addition to all of the recordkeeping and reporting requirements outlined in § 63.10 of the General Provisions (subpart A of 40 CFR part 63), owners or operators of kraft, soda, sulfite, and stand-alone semichemical pulp mills would be required to maintain the following records for each affected source: (1) Records of the black liquor solids firing rates for all recovery furnaces at kraft and soda pulp mills and spent liquor solids firing rates for all chemical recovery combustion units at sulfite and stand-alone semichemical pulp mills; (2) records of the lime production rates, calculated as CaO, for all kraft and soda lime kilns; (3) records of all parameter monitoring data; (4) records and documentation of supporting calculations for compliance determinations; (5) records of the established monitoring parameter ranges for each affected source; and (6) records of all certifications made in order to determine compliance with the total gaseous organic HAP standards. All records would have to be maintained for a minimum of 5 years.

IV. Rationale

This section describes the rationale for the decisions made by the Administrator in determining the proposed MACT floors for each source category and in selecting the proposed standards.

A. Selection of Source Category

The list of source categories was published in the **Federal Register** on July 16, 1992 and includes pulp and paper mills as major sources of HAP's (57 FR 31576). Standards for the pulp and paper production source category are being developed in phases. In December 1993, EPA proposed the first set of emission standards for the source category (i.e., a proposed NESHAP for noncombustion sources in the pulp and paper industry, otherwise referred to as MACT I) as part of a ''cluster rule'' that also included proposed effluent guidelines and standards for the control of wastewater pollutants (58 FR 66078). In March 1996, EPA proposed to include for regulation additional noncombustion operations and mills not covered under the December 1993 proposal (i.e., MACT III) (61 FR 9383). The NESHAP for noncombustion sources, as well as the effluent guidelines and standards, are being promulgated as part of today's cluster rule. An additional set of standards for the source category is covered by today's proposed NESHAP for chemical recovery combustion sources (i.e., MACT II). Today's proposed ''combustion sources'' NESHAP covers (1) combustion units in the chemical recovery area at kraft, soda, sulfite, and stand-alone semichemical pulp mills, (2) SDT's at kraft and soda pulp mills, and (3) BLO systems at kraft pulp mills. Although kraft and soda SDT's and kraft BLO systems are not combustion sources, these equipment are included in today's proposed ''combustion sources'' NESHAP because they are closely associated with the chemical recovery combustion equipment. For the purposes of today's proposed standards, the combustion units, SDT's, and BLO systems are collectively referred to as ''chemical recovery combustion sources.'' Specifically, the chemical recovery combustion sources are defined as (1) kraft and soda NDCE recovery furnaces and DCE recovery furnace systems (which include BLO systems), (2) kraft and soda SDT's, (3) kraft and soda lime kilns, (4) sulfite combustion units, and (5) semichemical combustion units.

B. Selection of Emission Points

The following section identifies the HAP emission points for kraft, soda, sulfite and stand-alone semichemical pulp mills that were examined by the Agency for control under the proposed rule. General descriptions of the chemical recovery process and equipment also are included in this section. More detailed information on the emission points and chemical recovery process can be found in the technical support documents listed under the **ADDRESSES** section.

1. Emission Points—Kraft Pulp Mills

Emission points at kraft pulp mills that were examined by the Agency for control under the proposed standards are NDCE recovery furnaces and DCE recovery furnace systems, SDT's, and lime kilns. These emission points are integral parts of the kraft chemical recovery process, in which cooking liquor chemicals (i.e., sodium hydroxide [NaOH] and sodium sulfide [Na_2S]) are recovered from spent cooking liquor. Cooking liquor, which is used in the pulping process, is commonly referred

to as white liquor; spent cooking liquor is commonly referred to as black liquor.

a. *NDCE Recovery Furnaces and DCE Recovery Furnace Systems.* There are an estimated 209 recovery furnaces operating at U.S. kraft pulp mills. The kraft recovery furnace is essentially a chemical recovery unit and steam generator that uses black liquor as its fuel. More specifically, the kraft recovery furnace (1) recovers inorganic pulping chemicals from black liquor as smelt by reducing sodium sulfate (Na_2SO_4) to Na_2S and (2) combusts organic compounds in black liquor to produce steam for mill processes.

Kraft recovery furnaces can be classified based on the type of final-stage evaporator used to increase the solids content of black liquor prior to firing in the furnace. The final-stage evaporator, which follows the multiple-effect evaporator (MEE), may be either an NDCE or DCE. Direct contact evaporators use flue gases from the recovery furnace to concentrate the black liquor. In the 1970's, as energy costs increased and Federal and State regulations were passed that limited TRS emissions from kraft pulp mills, the use of NDCE's (or concentrators) became more prevalent. By using an NDCE, the heat that was formerly used to concentrate black liquor in the DCE can be used to produce steam by extending the economizer section of the furnace, and the TRS emissions (associated with the DCE) will be decreased. For newer recovery furnaces, all of which use NDCE's, the NDCE is often considered an integral part of the MEE. Approximately 61 percent of kraft recovery furnaces are NDCE recovery furnaces, and 39 percent are DCE recovery furnace systems. For the purposes of today's proposed rule, an ''NDCE recovery furnace'' is defined as a recovery furnace that is equipped with an NDCE that concentrates black liquor by indirect contact with steam. A ''DCE recovery furnace system'' is defined to include a DCE recovery furnace and any BLO system, if present, at the pulp mill; a ''DCE recovery furnace'' is defined as a recovery furnace that is equipped with a DCE that concentrates strong black liquor by direct contact between the hot recovery furnace exhaust gases and the strong black liquor.

All kraft recovery furnaces have a PM control device, typically an ESP. The PM collected in the ESP, which is predominantly Na_2SO_4, is returned to the concentrated black liquor that is fired in the recovery furnace. The mechanism for returning the PM to the black liquor may be a dry system or may use either black liquor or process water.

In DCE recovery furnace systems, black liquor is oxidized prior to evaporation in the DCE. Black liquor oxidation reduces emissions of TRS compounds, which are stripped from black liquor in the DCE when the black liquor contacts hot flue gases from the recovery furnace. Black liquor can be oxidized using either air or pure (molecular) oxygen. Air-sparging units operate by bubbling air through the black liquor using multiple diffuser nozzles. Air-sparging units have from one to three tanks (or stages) that operate in series and a corresponding number of emission points. At two mills, vent gases from air-sparging BLO units are routed to a power boiler to reduce TRS emissions via incineration. Molecular oxygen BLO systems resemble pipeline reactors and require relatively short residence times (i.e., 30 seconds to 5 minutes compared to 1 or more hours for air-sparging units). Because all of the oxygen is consumed in the reaction, no system vent is required with molecular oxygen BLO in-line reactors, and therefore, no emission point is associated with these systems. There are an estimated 46 BLO systems operating at kraft pulp mills. Mills with multiple DCE recovery furnaces have one BLO system. At present, only four mills (with seven DCE recovery furnaces) use a molecular oxygen BLO system.

The emission potential for DCE recovery furnace systems is higher than that for NDCE recovery furnaces because of the increased opportunity to strip HAP compounds from the black liquor in the process equipment. In the DCE recovery furnace system, gaseous organic HAP compounds can be stripped from the black liquor in the air-sparging BLO system and in the DCE. Similarly, the emission potential for NDCE recovery furnaces with ESP's that use black liquor or HAP-contaminated process water in the ESP bottom or PM return system is higher than that for NDCE recovery furnaces that have dry ESP systems (i.e., dry-bottom ESP's and dry PM return systems). As with the air-sparging BLO systems and DCE's, stripping of gaseous organic HAP compounds can occur if black liquor or HAP-contaminated process water is used in the bottom of the ESP or in the PM return system.

In addition to the criteria pollutants (i.e., PM, NO_X, SO_2, CO, and VOC [ozone precursor]) and TRS, the compounds emitted in the largest quantities from NDCE recovery furnaces and DCE recovery furnace systems are methanol and HCl. For a given process emission rate, the total gaseous organic HAP emissions from DCE recovery furnace systems are, on average, approximately 14 times higher than NDCE recovery furnaces with dry ESP systems. Also, for a given process emission rate, the total gaseous organic HAP emissions from NDCE recovery furnaces with wet ESP systems (i.e., ESP's that use black liquor or HAP-contaminated process water in the ESP bottom or PM return system) are, on average, approximately 3.5 times higher than NDCE recovery furnaces with dry ESP systems. Of the total gaseous organic HAP's emitted, methanol emissions account for approximately 67 percent of emissions from DCE recovery furnace systems and 13 percent of emissions from NDCE recovery furnaces with dry ESP systems.

For a given process emission rate, HCl emissions are approximately equivalent for both NDCE recovery furnaces and DCE recovery furnace systems. Hydrogen chloride emissions account for approximately 19 percent of the total gaseous HAP emissions from DCE recovery furnace systems and 76 percent of the total gaseous HAP emissions from NDCE recovery furnaces with dry ESP systems.

Particulate matter HAP's account for approximately 0.2 percent of the PM emissions and 0.3 percent of the total HAP emissions from recovery furnaces. Although the PM inlet loadings to the PM control devices for NDCE recovery furnaces are higher than for DCE recovery furnaces due to removal of 20 to 40 percent of the PM in the DCE unit, equivalent outlet PM emissions can be achieved with the use of add-on controls.

b. *Smelt Dissolving Tanks.* There are an estimated 227 SDT's at U.S. kraft pulp mills. This estimate is higher than the estimated number of recovery furnaces because some furnaces have two SDT's. The SDT is a large, covered vessel located below the recovery furnace and is the discharge point for molten smelt, which is the main product from the combustion of black liquor. Smelt, which is predominantly sodium carbonate (Na_2CO_3) and Na_2S, filters through the char bed at the bottom of the recovery furnace and is continuously discharged through water-cooled spouts into the SDT. As the smelt exits the water-cooled spouts, the smelt stream is shattered with medium-pressure steam so that it can be safely dissolved in the SDT. In the SDT, smelt is dissolved in weak wash water from the recausticizing area to form unclarified green liquor, an aqueous solution of Na_2CO_3 and Na_2S.

Large volumes of steam are generated when the smelt is quenched in the SDT. Residual water vapor and PM generated

during quenching are drawn off the tank through a venturi scrubber or other PM control device using an induced-draft fan. Particulate matter HAP's account for approximately 0.06 percent of the PM emissions from SDT's. The water used in the scrubber, which is typically weak wash, drains directly into the SDT. Gaseous organic HAP compounds (primarily methanol) also are emitted from SDT's as a result of the use of weak wash in the SDT and PM control device. Because of the elevated operating temperature of the SDT, gaseous organic HAP compounds present in the weak wash can volatilize and subsequently be released to the atmosphere.

c. *Lime Kilns.* An estimated 190 lime kilns operate at U.S. kraft pulp mills. The lime kiln is part of the recausticizing process in which green liquor from the SDT is converted to white liquor. Specifically, Na_2CO_3 in the green liquor is converted to NaOH, a main constituent of white liquor, by adding reburned lime (CaO) from the lime kiln. The resulting white liquor solution contains NaOH, Na_2S, and calcium carbonate (Ca_2CO_3) precipitate (referred to as ''lime mud''). Lime mud is removed from this solution in a white liquor clarifier. The lime mud is then washed, dewatered, and calcined in a lime kiln to produce reburned lime, which is recycled back to the green liquor.

Most kilns in use at kraft pulp mills are large rotary kilns (98 percent); a few fluidized-bed calciners are also used. Natural gas or fuel oil typically provides the energy for the calcining process. The majority of lime kilns at kraft pulp mills also burn noncondensible gas streams (NCG's) from various process vents, such as digester and evaporator vents.

Lime kiln exhaust gases consist of combustion products, carbon dioxide released during calcination, water vapor evaporated from the mud, and entrained lime dust. Particulate in the exhaust gases is mainly CaO, Ca_2CO_3, and sodium salts. Approximately 1.4 percent of the PM emissions from lime kilns is PM HAP's. Exhaust gases are routed through a PM control device prior to being discharged to the atmosphere. Venturi scrubbers and ESP's are the two most common types of PM control devices used to control PM emissions from lime kilns.

As with SDT's, gaseous organic HAP compounds (primarily methanol) also are emitted from lime kilns due primarily to the use of weak wash as the scrubbing liquor in the PM control device and lime mud washer. Because of the elevated gas stream temperature, gaseous organic HAP compounds present in the weak wash can volatilize and subsequently be released to the atmosphere.

2. Emission Points—Soda Pulp Mills

Emission points at soda pulp mills that were examined by the Agency for control under today's proposed standards are recovery furnaces, SDT's, and lime kilns. The processes and equipment used in the chemical recovery areas of soda and kraft pulp mills are similar, except that the soda process, because it is a nonsulfur process, does not require black liquor oxidation. With the exception of sulfur-containing compounds, the types and quantities of compounds emitted from soda pulp mills are comparable to the types and quantities of compounds emitted from kraft pulp mills. There are only two soda pulp mills in the United States, and no new soda mills are expected to be constructed. There are a total of two recovery furnaces (one NDCE and one DCE), two SDT's, and two lime kilns at the soda mills.

3. Emission Points—Sulfite Pulp Mills

The emission point at sulfite pulp mills that was examined by the Agency for control under the proposed standard is the chemical recovery combustion unit. The chemical recovery combustion unit is an integral part of the chemical recovery process, which recovers cooking liquor chemicals from spent cooking liquor (also called red liquor). The types of chemical recovery combustion units used at sulfite mills are recovery furnaces, fluidized-bed reactors, and combustors. There are 18 recovery furnaces, 2 fluidized-bed reactors, and 1 combustor operating at sulfite pulp mills. For the purposes of today's proposed rule, these various combustion units are collectively referred to as ''sulfite combustion units.''

The process and equipment used to recover sulfite cooking liquor chemicals depend on the chemical base of the cooking liquor. Sulfite cooking liquors use one of four chemical bases—magnesium (Mg), ammonia (NH_3), calcium (Ca), or sodium (Na). Cooking liquor chemicals can be recovered for the Mg-, NH_3-, and Na-based sulfite processes. Recovery of cooking liquor chemicals is not practical for the Ca-based sulfite process, and, therefore, no sulfite combustion units are used at the existing Ca-based sulfite mills. Additionally, there are currently no operating Na-based sulfite mills. There are currently six Mg-based sulfite mills and six NH_3-based sulfite mills. Information on the sulfite combustion units at Mg- and NH_3-based sulfite pulp mills follows.

At the six Mg-based sulfite mills, red liquor is fired in a recovery furnace or fluidized-bed reactor. There are nine recovery furnaces and two fluidized-bed reactors. Multiple-effect evaporators, which may be followed by a DCE or NDCE, are used to increase the solids content of the red liquor prior to firing in the combustion unit. Magnesium-based sulfite combustion units differ from kraft recovery furnaces in that there are no smelt beds. Combustion of the spent liquor produces both heat for steam generation and exhaust gases that contain magnesium oxide (MgO) particulate and SO_2 gas. When a recovery furnace is used, the major portion of the MgO is recovered as a fine white powder from the exhaust gases using multiple cyclones. When a fluidized-bed reactor is used, MgO from the exhaust gases is collected in a cyclone and from the bed of the reactor as pulverized bed material. The MgO from the recovery furnace or fluidized-bed reactor is then slaked with water to form magnesium hydroxide ($Mg(OH)_2$), which is used as circulating liquid in a series of absorption towers and/or venturi scrubbers designed to recover SO_2 from combustion gases. In the absorption towers/venturi scrubbers, SO_2 is recovered by reaction with $Mg(OH)_2$ to form a magnesium bisulfite solution. The magnesium bisulfite solution is then fortified with makeup SO_2 and subsequently used as cooking liquor. Some mills have installed air pollution control devices, such as a fiber-bed demister system or an educted venturi scrubber, downstream of the SO_2 absorption equipment, to further reduce PM and/or SO_2 emissions.

At the six NH_3-based sulfite pulp mills, red liquor is fired in a recovery furnace or combustor. There are nine recovery furnaces and one combustor. The solids content of the red liquor is increased using MEE's, which may be followed by a DCE or NDCE. Combustion of the spent liquor produces both heat for steam generation and combustion gases that contain recoverable SO_2. The ammonia base is consumed during combustion, forming nitrogen and water. A small amount of ash is produced and periodically removed from the furnace bottom. (There are no smelt beds.) Sulfur dioxide is recovered from cooled flue gas in an acid-gas absorption tower to form an ammonium bisulfite solution. Fresh aqueous NH_3 is used as the circulating liquor in the absorption system. The ammonium bisulfite solution is fortified with makeup SO_2 and used as cooking liquor. Exit gases from the absorption system are typically

routed to a fiber-bed demister system for PM removal and mist elimination prior to being discharged to the atmosphere. Some mills have installed a scrubber or mesh-pad mist eliminator upstream of the fiber-bed demister system for additional PM and SO_2 emission control and to improve the efficiency and operation of the fiber-bed demister system.

4. Emission Points—Stand-Alone Semichemical Pulp Mills

The emission point at stand-alone semichemical pulp mills that was examined for control under today's proposed standards is the chemical recovery combustion unit. The combustion unit is used in the chemical recovery process to recover the inorganic cooking chemicals, produce steam, and remove the organic compounds in the black liquor by combustion. Cooking liquor chemicals are recovered as either smelt or ash, which is dissolved in water and mixed with make-up cooking chemicals to form white liquor.

There are 14 chemical recovery combustion units currently operating at stand-alone semichemical pulp mills. Five different types of chemical recovery combustion units are in operation: fluidized-bed reactors, recovery furnaces, smelters, rotary liquor kilns, and pyrolysis reactors. For the purposes of today's standards, these various combustion units are collectively referred to as ''semichemical combustion units.''

a. *Fluidized-Bed Reactors.* Seven fluidized-bed reactors are currently in use at seven stand-alone semichemical pulp mills. Fluidized-bed reactors are used extensively because the recovered chemicals are in the form of solid pellets, which can be stored in silos until the chemicals are needed to make fresh cooking liquor. This practice requires less storage space than when recovered chemicals are routed directly to a dissolving tank and stored in solution.

In the fluidized-bed reactor, concentrated black liquor is fired from a single spray gun located at the top of the reactor. As the liquor falls towards the bed, evaporation and some combustion occurs, causing the liquor to pelletize. Fluidizing gas rises through the bed of solid pellets, setting the bed in fluid motion. The soda ash (Na_2CO_3) pellets are recovered from the reactor and stored in silos.

b. *Recovery Furnaces.* Two NDCE recovery furnaces are currently in use at two stand-alone semichemical pulp mills. Semichemical recovery furnaces, like kraft recovery furnaces, are used to recover cooking liquor chemicals by burning concentrated black liquor and to produce process steam with the heat of combustion. Semichemical and kraft recovery furnaces are similar in design.

c. Smelters. Two smelters are currently in use at a nonsulfur-based, stand-alone semichemical pulp mill. Smelters operate in a manner similar to recovery furnaces, except that smelters do not produce excess steam for mill processes and are actually net users of heat. The units currently in use are actually converted small kraft recovery furnaces.

d. *Rotary Liquor Kilns.* Two rotary liquor kilns are currently in use at two nonsulfur-based, stand-alone semichemical pulp mills. Unlike lime kilns used in the kraft chemical recovery process, rotary liquor kilns are used for the combustion of black liquor at semichemical pulp mills. In the kiln, fuel oil is burned in the lower end. An induced-draft fan at the upper end draws combustion air into the lower end and draws combustion gases through the kiln. Approximately halfway between the lower and upper ends, black liquor is fired into the kiln. Sodium carbonate ash created from contact between black liquor and combustion gases falls to the lower end of the kiln, then is routed to an ash dissolving tank. The combustion gases are routed to a waste heat boiler to produce steam.

e. *Pyrolysis Reactor.* One pyrolysis reactor is currently in use at a stand-alone semichemical pulp mill. ''Pyrolysis'' means chemical change caused by heat, not by combustion. In the pyrolysis reactor, fuel oil or propane is burned to provide the heat for pyrolysis. Black liquor is injected under high pressure in a finely atomized spray through several nozzles arranged around the wall of the pyrolysis chamber. The hot combustion gases travel downward at high velocity and contact the liquor sprays at high turbulence and rapid mixing.

Pyrolysis reactions occur, converting the sodium in the liquor into a solid ash powder composed mainly of soda ash (Na_2CO_3), and the other constituents into a gaseous mixture of hydrogen sulfide (H_2S) mixed with CO, carbon dioxide (CO_2), hydrogen (H_2), methane (CH_4), nitrogen (N_2), and water vapor.

f. *HAP Emissions from Semichemical Combustion Sources.* Test data indicate that chemical recovery combustion units at stand-alone semichemical pulp mills are significant sources of gaseous organic HAP emissions. The major HAP compounds emitted from chemical recovery combustion units are methanol, benzene, methyl ethyl ketone, formaldehyde, and toluene. The fluidized-bed reactors emit the highest quantities of HAP's, while emissions from other semichemical combustion unit types (e.g., recovery furnaces and rotary liquor kilns) are much lower. For example, based on available HAP emissions data, the fluidized-bed reactors have total HAP emissions approximately 20 to 75 times higher per ton of black liquor solids fired than the other semichemical combustion unit types. Some of the other semichemical combustion unit types (e.g., recovery furnaces and rotary liquor kilns) are inherently lower-emitting because they achieve more complete combustion of organic compounds. (No HAP emission data were available for the pyrolysis unit; however, that unit is scheduled to be decommissioned by 1998 due to operational difficulties, and no more pyrolysis units are expected to be installed at stand-alone semichemical pulp mills.) Unlike kraft recovery furnaces, most of the HAP's emitted from fluidized-bed reactors at stand-alone semichemical pulp mills are formed in the reactor due to incomplete combustion, not from contact of the exhaust stream with black liquor or HAP-contaminated water in the DCE or wet ESP systems. Carbon monoxide emissions, an indicator of combustion efficiency, have been measured from fluidized-bed reactors at levels as high as 50,000 parts per million by volume (ppm_v); by contrast, kraft recovery furnaces typically emit less than 1,000 ppm_v of CO. No add-on control devices are currently being used to control total gaseous organic HAP emissions from combustion sources at stand-alone semichemical pulp mills; however, at least one RTO will be installed to control emissions from a fluidized-bed reactor at a semichemical mill by the end of 1997.

C. Selection of Definition of Affected Source

Most industrial plants consist of numerous pieces or groups of equipment that emit HAP and that may be viewed as emission ''sources.'' The Agency, therefore, uses the term ''affected source'' to designate the equipment within a particular kind of plant that is chosen as the ''source'' covered by a given standard. For today's rulemaking, EPA is proposing to define the affected source as each individual process unit within the chemical recovery area at kraft, soda, sulfite, and stand-alone semichemical pulp mills. For kraft and soda pulp mills, each recovery furnace and its associated SDT('s) are considered together as an affected source. The Agency decided to

consider these emission points as one source because recovery furnaces and SDT's are generally sold as one unit, although the emissions from the recovery furnace and the SDT are treated separately in nearly all cases. In today's proposed rulemaking, five process units are examined: (1) Kraft and soda NDCE recovery furnaces (and associated SDT's), (2) kraft and soda DCE recovery furnace systems (and associated SDT's), (3) kraft and soda lime kilns, (4) sulfite combustion units, and (5) semichemical combustion units.

D. Selection of Pollutants

For purposes of this rule, the HAP's emitted from combustion sources at pulp mills have been divided into three categories: (1) PM HAP's, (2) total gaseous organic HAP's, and (3) HCl. The EPA proposes to regulate emissions of PM HAP's and gaseous organic HAP's.

1. PM HAP's

Available emission data indicate that PM HAP's are emitted from kraft and soda recovery furnaces, SDT's, and lime kilns and sulfite combustion units. Particulate matter HAP's represent approximately 0.2 percent of the PM emitted from these combustion sources. Particulate matter was selected as a surrogate for HAP metals emitted in the form of particulate. Available data on PM control device performance indicate that control systems that control PM also control the HAP portion of the PM. (See Technical Support Document: Chemical Recovery Combustion Sources at Kraft and Soda Pulp Mills, Chapter 3; docket entry No. II–A–31.) However, as a means of maximizing compliance flexibility, the proposed rule also includes a PM HAP emission limit for existing affected sources at kraft and soda mills that choose to measure PM HAP's directly, as opposed to measuring PM.

2. Total Gaseous Organic HAP's

Available emission data indicate that the following gaseous organic HAP's are emitted from kraft and soda NDCE recovery furnaces and DCE recovery furnace systems and semichemical combustion units: acetaldehyde, benzene, formaldehyde, methyl ethyl ketone, methyl isobutyl ketone, methanol, phenol, styrene, toluene, and xylenes. Methanol is the predominant gaseous organic HAP emitted from kraft and soda NDCE recovery furnaces and DCE recovery furnace systems.

Methanol was selected as a surrogate for gaseous organic HAP compounds for demonstrating compliance with the total gaseous organic HAP limits for new kraft and soda NDCE recovery furnaces and DCE recovery furnace systems because methanol is the predominant HAP emitted from these sources, and controls in place for methanol also would result in the control of other gaseous organic HAP compounds. (See Technical Support Document: Chemical Recovery Combustion Sources at Kraft and Soda Pulp Mills, Chapter 2; docket entry No. II–A–31.) For example, the major emission mechanism for the release of gaseous organic HAP compounds is the stripping of the compounds from the black liquor in the BLO unit, the DCE, and some ESP systems. Reducing contact between the gas streams and the black liquor in these units reduces not only methanol emissions but also emissions of other gaseous organic HAP's. In addition, performance tests are more expensive when a range of organic compounds must be measured. The measurement of methanol as a surrogate for gaseous organic HAP's reduces compliance costs. Therefore, the Agency selected methanol as a surrogate for total gaseous organic HAP emissions for new kraft and soda NDCE recovery furnaces and DCE recovery furnace systems.

For new and existing semichemical combustion units, THC emissions were selected as a surrogate for total gaseous organic HAP emissions. Emissions from semichemical combustion units are primarily the result of incomplete combustion, and THC emissions were found to correlate with HAP emissions. (See Correlation of THC Emissions with HAP Emissions Memo; docket entry No. II–B–71.)

3. Hydrochloric Acid (HCl)

The Agency proposes not to regulate HCl emissions from recovery furnaces. Under the authority of section 112(d)(4), the Agency has determined that no further control is necessary because HCl is a ''health threshold pollutant,'' and HCl levels emitted from recovery furnaces are below the threshold value within an ample margin of safety. The following discussion provides the basis for the Agency's decision not to regulate HCl emissions from recovery furnaces. Specifically, this section discusses (1) the statutory authority for considering the health threshold when establishing standards, (2) the determination of HCl as a threshold pollutant, (3) the exposure assessment modeling of HCl emissions from recovery furnaces, (4) an ecological assessment of HCl, and (5) the Agency's conclusions.

a. *Statutory Authority.* The Act includes certain exceptions to the general statutory requirement to establish emission standards based on the performance of MACT. Of relevance here, section 112(d)(4) provides EPA with authority, at its discretion, to develop risk-based standards for HAP's ''for which a health threshold has been established'', provided that the standard achieves an ''ample margin of safety.'' (The full text of the section 112(d)(4): ''[w]ith respect to pollutants for which a health threshold has been established, the Administrator may consider such threshold level, within an ample margin of safety, when establishing emission standards under this subsection.'')

The EPA presumptively applies section 112(d)(4) only to HAP's that are not carcinogens because Congress clearly intended that carcinogens be considered nonthreshold pollutants. (Staff of the Senate Committee on Environment and Public Works, A Legislative History of the Clean Air Act Amendments of 1990, Vol. 1 at 876, statement of Senator Durenberger during Senate Debate of October 27, 1990: ''With respect to the pollutants for which a safe threshold can be set, the authority to set a standard less stringent than maximum achievable control technology is contained in subsection (d)(4). With respect to carcinogens and other non-threshold pollutants, no such authority exists in subsection (d) or in any other provision of the Act.'') The legislative history further indicates that if EPA invokes this provision, it must assure that any emission standard results in ambient concentrations less than the health threshold, with an ample margin of safety, and that the standards must also be sufficient to protect against adverse environmental effects (S. Rep. No. 228, 101st Cong. at 171). Costs are not to be considered in establishing a standard pursuant to section 112(d)(4) (*Ibid.*).

Therefore, EPA believes it has the discretion under section 112(d)(4) to develop risk-based standards for some categories emitting threshold pollutants, which may be less stringent than the corresponding ''floor''-based MACT standard would be. If EPA decided to develop standards under this provision, it would seek to assure that emissions from every source in the category or subcategory are less than the threshold level to an individual exposed at the upper end of the exposure distribution. The upper end of the exposure distribution is calculated using the ''high end exposure estimate,'' defined as ''a plausible estimate of individual exposure for those persons at the upper end of the exposure distribution, conceptually above the 90th percentile, but not higher than the individual in the population who has the highest exposure'' (EPA Exposure Assessment Guidelines, 57 FR 22888, May 29, 1992).

The EPA believes that assuring protection to persons at the upper end of the exposure distribution is consistent with the ''ample margin of safety'' requirement in section 112(d)(4).

The EPA emphasizes that use of section 112(d)(4) authority is wholly discretionary. As the legislative history described above indicates, cases may arise in which other considerations dictate that the Agency should not invoke this authority to establish less stringent standards, despite the existence of a health effects threshold that is not jeopardized. For instance, EPA does not anticipate that it would set less stringent standards where evidence indicates a threat of significant or widespread environmental effects, although it may be shown that emissions from a particular source category do not approach or exceed a level requisite to protect public health with an ample margin of safety. The EPA may also elect not to set less stringent standards where the estimated health threshold for a contaminant is subject to large uncertainty. Thus, in considering appropriate uses of its discretionary authority under section 112(d)(4), EPA intends to consider other factors in addition to health thresholds, including uncertainty and potential ''adverse environmental effects,'' as that phrase is defined in section 112(a)(7).

b. *Health Effects Assessment.* Several factors are considered in the Agency's decision of whether a pollutant should be categorized as a health threshold pollutant for the purposes of section 112(d)(4). These factors include evidence and classification of carcinogenic risk and evidence of noncarcinogenic effects. The following discussion focuses on these factors.

Consideration is given to any evidence of human carcinogenic risk associated with the pollutant. Based on Congress's intent, for the purposes of section 112(d)(4), the Administrator presumptively concludes that HAP's classified as either Group A (known carcinogen), Group B (probable carcinogen), or Group C (possible carcinogen) (as defined under the EPA's 1986 Carcinogen Risk Assessment Guidelines (51 FR 33992; September 24, 1986)) should not be categorized as threshold pollutants (as per section 112(f)(2)(A) of the Act, which requires EPA to consider residual risk standards for pollutants classified as ''known, probable, or possible human carcinogens''). The EPA recognizes that advances in risk assessment science and policy, as incorporated in future EPA risk assessment guidelines, may affect the way EPA differentiates between threshold and non-threshold HAP's. The EPA's draft Guidelines for Carcinogen Risk Assessment (public review draft, April, 1996) suggest that carcinogens be assigned non-linear dose-response relationships where data warrant. It is possible that dose-response curves for some substances may reach zero risk at a dose greater than zero, creating a threshold for carcinogenic effects. The EPA will consider both the state of the science and legislative intent in future rulemaking under section 112(d)(4). Under EPA's current guidelines, the Agency considers the data on carcinogenicity in humans and/or animals for pollutants with A, B, or C classifications adequate support for consideration of a HAP as a nonthreshold pollutant.

By definition, the Agency does not have enough evidence available to conclude whether HAP's with the weight of evidence classification of Group D (as defined under the EPA's 1986 Carcinogen Risk Assessment Guidelines [51 FR 33992; September 24, 1986]) pose a human cancer risk. Thus, the Agency will determine, on a case-by-case basis, whether the available evidence is sufficient to conclude whether a ''safety threshold for exposure'' exists for each HAP that is classified as a Group D pollutant. For the purposes of this action, the Agency believes it is reasonable to classify HCl as a Group D pollutant (see Health Assessment Document for Chlorine and Hydrogen Chloride, Review Draft; EPA–600/8–87/041A, August 1994). This classification is based on only one animal study, and no human data are available for review. In the animal study, no carcinogenic response was observed in rats exposed via inhalation. Based on the limited negative carcinogenicity data, and on EPA's knowledge of how HCl reacts in the body and its likely mechanism of action (discussed further below), the Agency presumptively considers HCl to be a threshold pollutant.

Under current EPA science policy, HAP's classified as Group E pollutants (evidence of noncarcinogenicity for humans) are presumptively considered by the Agency, for the purposes of section 112(d)(4), to have a ''safety threshold of exposure.'' Therefore, Group E pollutants are considered threshold pollutants, unless there is adequate evidence to the contrary. The EPA has developed new risk assessment guidelines for reproductive effects (see http://www.epa.gov/ORD/WebPubs/repro), and is in the process of developing others (e.g., developmental effects and neurotoxicity) that may influence determinations of thresholds for specific pollutants.

For pollutants such as HCl that are considered to have a ''threshold of safety'' below which adverse effects are not expected, the information on noncarcinogenic effects must be evaluated to determine the potential hazards associated with exposure to the pollutant. One approach for determining potential hazards of a pollutant is to use its Inhalation Reference Concentration (RfC). The RfC is defined as an estimate (with uncertainty spanning perhaps an order of magnitude) of a daily inhalation exposure that, over a lifetime, would not likely result in the occurrence of noncancer health effects in humans. A health benchmark such as the RfC can be established by applying uncertainty factors to the critical toxic effect derived from the lowest or no-adverse-effect level of a pollutant (see EPA–600/8–90–066F, October 1994, Methods for Derivation of Inhalation Reference Concentrations and Applications of Inhalation Dosimetry). The confidence in the RfC (which is given a qualitative ranking of either high, medium, or low) is based on the number of studies available and the quality of the data base, among other things.

The RfC for HCl is based on a single animal study, which used only one dose and had limited toxicological measurements. In that study, laboratory rats exposed to 15,000 $\mu g/m^3$ HCl for 6 hours per day, 5 days per week for life, developed an increased incidence of hyperplasia of the larynx and trachea, compared to controls (Health Assessment Document for Chlorine and Hydrogen Chloride, Review Draft; EPA–600/8–87/041A, August 1994). Effects on laboratory animals exposed to even higher concentrations of HCl for 90 days included damage to the organs of the respiratory system, but not to more distant organs. Chronic exposure studies involving lower concentrations (less than 15,000 $\mu g/m^3$) have not been done, nor have comprehensive epidemiological studies of humans (Health Assessment Document for Chlorine and Hydrogen Chloride, Review Draft; EPA–600/8–87/041A, August 1994).

The RfC for HCl is 20 $\mu g/m^3$ (EPA, 1995, Integrated Risk Information System (IRIS), Reference Concentration (RfC) for Inhalation Exposure for Hydrogen Chloride. National Center for Environmental Assessment, Cincinnati, OH. On-Line). This concentration is a low confidence RfC with an uncertainty factor of 300 applied to the lowest adverse effect level noted in animals (*Ibid*).

Generally, information on developmental and reproductive effects would provide additional confidence in

the adequacy of the health benchmark for characterizing health risk. No information is available on the developmental or reproductive effects associated with HCl exposure in humans or animals. However, no additional uncertainty is applied for the lack of these studies because HCl that deposits in the lung is not expected to have any effects at sites distant from the lung. Hydrogen chloride, in solution, quickly dissociates to H^+ (which, in small doses, is buffered in the tissue or blood) and Cl^- (which is ubiquitous in the body). Therefore, HCl is expected to have only local effects at the site of initial deposition. Furthermore, HCl is not thought to be directly genotoxic (Health Assessment Document for Chlorine and Hydrogen Chloride, Review Draft; EPA–600/8–87/041A, August 1994).

Based on the information presented above, the Administrator has determined that HCl is a health threshold pollutant for the purpose of section 112(d)(4) of the Act. The Administrator also concludes that, in this case, the RfC is an appropriate threshold value for assessing risk to humans associated with exposure to this pollutant through inhalation.

c. *Exposure Assessment.* Based on emission tests of 14 kraft recovery furnaces, uncontrolled HCl emissions from DCE and NDCE recovery furnaces range from 0 to 923 Mg/yr (0 to 1,016 tons/yr); however, the concentrations of HCl in recovery furnace exhaust gases (0.3 to 95.6 ppm_v) are relatively low due to the high volume of the exhaust gases. Chlorides enter the liquor cycle primarily through the wood used for pulping and the caustic used as makeup chemical during white liquor preparation, although mill process water can also be a significant contributor. A small portion of the chlorides in the black liquor fed to the recovery furnace can be emitted from the furnace as HCl gas. The remaining chlorides in the black liquor exit the recovery furnace as inorganic alkali salts, either as particulate in the exhaust gases or as a constituent of the smelt.

For sulfite combustion units, HCl emissions are negligible because acid-gas absorption systems are an integral part of the sulfite chemical recovery process. Hydrochloric acid emissions data are available for only one sulfite combustion unit; HCl emissions from this unit were approximately 1 ppm_v following the acid-gas absorption system. No data are available on HCl emissions prior to the acid-gas absorption systems. No HCl emission data are available for semichemical combustion units. However, neither process nor technical considerations indicate that HCl emissions would be significant.

Inputs for the exposure assessment model were developed for kraft and soda recovery furnaces, which have the higher HCl emissions. The inputs were developed using available test data and mill-specific process data. Estimated HCl emission rates were based on the highest available HCl emission factors (in units of kilograms [kg] of HCl per kg of black liquor solids fired) for both NDCE and DCE recovery furnaces. Because the HCl emission rates were based on mill-specific process data (e.g., black liquor solids firing rate), each recovery furnace type at each mill had a unique set of emissions estimates. Stack parameters (i.e., height, diameter, temperature and velocity) were based on information obtained from the AIRS data base; average values from AIRS were assigned to those sources for which AIRS data were not available. For mills with multiple recovery furnaces (e.g., two NDCE recovery furnaces), HCl emissions from the furnaces were summed, and the stack parameters for those recovery furnaces were averaged.

This exposure assessment was conducted following the principles described in the Agency's Exposure Assessment Guidelines (57 FR 22888, May 29, 1992). There is no expectation that the population will be exposed to higher long-term levels of HCl than those predicted by the model. In this case, a screening analysis was used to determine if emissions of HCl could result in exposures above Agency-established health threshold concentrations. The assessment was conducted for 106 mills. The applied approach incorporates into the analysis ranges of values for those variables meeting the following criteria: where mathematical distributions are available; where the variables are independent; and, most importantly, where the variables are believed to significantly influence the results of the analysis. This probabilistic procedure uses Monte Carlo simulation to produce distributions with associated probability estimations (e.g., there is a 95 percent probability that the estimated exposure to the most exposed population group (census block) is less than the RfC for HCl).

The distributions used in the Monte Carlo analysis were taken primarily from EPA sources (such as the Exposure Factors Handbook; EPA/600/8–89/043, July 1989) and the literature. Best judgments were used in selecting the distributions and, in some cases, in using only portions of the distributions that are provided in the Handbook. Use of other distributions may result in different final outcomes for the Monte Carlo analysis.

The results of this analysis show that, at the 95 percent confidence interval, the maximum concentration predicted to which people are estimated to be exposed is 0.3 $\mu g/m^3$, 60 times less than the inhalation reference concentration.

In addition, terrain (e.g., hills and valleys) is known to affect concentration estimates predicted near facilities with elevated pollutant releases (e.g., stacks). The effect of terrain on estimated HCl concentrations was investigated by including terrain in the modeling of the ten recovery furnaces that produced the highest estimated HCl concentrations at census blocks in the exposure assessment described above. The terrain analysis and a Monte Carlo assessment similar to that described above resulted, at the 95 percent confidence interval, in a maximum concentration to which people are expected to be exposed of 2 $\mu g/m^3$, which is 10 times less than the inhalation reference concentration.

d. *Ecological Assessment.* The standards for emissions must also protect against significant and widespread adverse environmental effects to wildlife, aquatic life, and other natural resources. Approaches to ecological risk assessments are being developed and applied by EPA for several areas of concern regarding the effects of pollutants. For HCl emitted by these source categories, a formal ecological risk assessment as such has not been made. However, publications in the literature have been reviewed to determine if there would be reasonable expectation for serious or widespread adverse effects to natural resources.

Aspects of pollutant exposure and effects that should be considered are: toxicity effects from acute and chronic exposures to expected concentrations around the source (as measured or modeled), persistence in the environment, local and long-range transport, and tendency for bio-magnification with toxic effects manifest at higher trophic levels.

No research has been identified for effects on terrestrial animal species beyond that cited in the development of the RfC. The evidence available to date, discussed in section IV.D.3.b of this preamble, indicates that HCl is a threshold pollutant for the purposes of section 112(d)(4) of the Act. Modeling calculations indicate that there is little likelihood of chronic or widespread exposure to HCl at concentrations above the threshold around pulp and paper mills. Based on these considerations, EPA believes that the RfC can reasonably be expected to protect

against widespread adverse effects in other animal species as well.

Plants also respond to airborne HCl levels. Chronic exposure to about 600 μg/m^3, can be expected to result in discernible effects, depending on the plant species. Plants respond differently to HCl as an anhydrous gas than to HCl aerosols. Relative humidity is important in plant response; there appears to be a threshold of relative humidity above which plants will incur twice as much damage at a given dose (Medical and Biological Effects of Environmental Pollutants: Chlorine and Hydrogen Chloride, National Academy of Sciences, 1976). Effects include leaf injury and decrease in chlorophyll levels in various species given acute, 20-minute exposures of 6,500 to 27,000 μg/m^3 (Health Assessment Document for Chlorine and Hydrogen Chloride, Review Draft; EPA–600/8–87/041A, August 1994). A field study reports different sensitivity to damage of foliage in 50 species growing in the vicinity of an anhydrous aluminum chloride manufacturer. American elm, bur oak, eastern white pine, basswood, red ash and several bean species were observed to be most sensitive. Concentrations of HCl in the air were not reported. Chloride ion in whole leaves was 0.2 to 0.5 percent of dry weight; sensitive species showed damage at the lower value, but tolerant species displayed no injury at the higher value. Injury declined with distance from the source with no effects observed beyond 300 meters (Harper and Jones, 1982, ''The Relative Sensitivity of Fifty Plant Species to Chronic Doses of Hydrogen Chloride,'' Phytopathology 72: 261–262).

Prevailing meteorology strongly determines the fate of HCl in the atmosphere (Health Assessment Document for Chlorine and Hydrogen Chloride, Review Draft; EPA–600/8–87/041A, August 1994). However, HCl is not considered a strongly persistent pollutant, or one where long range transport is important in predicting its ecological effects. In the atmosphere, HCl can be expected to be absorbed into aqueous aerosols, due to its great affinity for water, and removed from the troposphere by rainfall. In addition, HCl will react with hydroxy ions to yield water plus chloride ions. However, the concentration of hydroxy ions in the troposphere is low, so HCl may have a relatively long residence time in areas of low humidity. No studies are reported of HCl levels in ponds or other small water bodies or soils near major sources of HCl emissions. Toxic effects of HCl to aquatic organisms would likely be due to the hydronium ion, or acidity. Aquatic organisms in their natural environments often exhibit a broad range of pH tolerance. Effects of HCl deposition to small water bodies and to soils will primarily depend on the extent of neutralizing by carbonates or other buffering compounds (Health Assessment Document for Chlorine and Hydrogen Chloride, Review Draft; EPA–600/8–87/041A, August 1994). Chloride ions are essentially ubiquitous in natural waters and soils, so minor increases due to deposition of dissolved HCl will have much less effect than the deposited hydronium ions. Deleterious effects of HCl on ponds and soils, where such effects might be found near a major source emitting to the atmosphere, likely will be local rather than widespread, as observed in plant foliage.

Effects of HCl on tissues are generally restricted to those immediately impacted and are essentially acidic effects. The rapid solubility of HCl in aqueous media releases hydronium ions, which can be corrosive to tissue when above a threshold concentration. The chloride ions may be concentrated in some plant tissues, but may be distributed throughout the organism, as most organisms have chloride ions in their fluids. Leaves or other tissues exposed to HCl may show some concentration above that of their immediate environment; that is, some degree of bioconcentration can occur. However, long-term storage in specific organs and biomagnification of concentrations of HCl in trophic levels of a food chain would not be expected. Thus, the chemical nature of HCl results in deleterious effects, that when present, are local rather than widespread.

e. *Conclusions.* The results of the exposure assessment modelling showed exposure levels to HCl emissions from kraft and soda recovery furnaces below the health threshold value. Furthermore, the threshold value, for which the RfC was determined to be an appropriate value, was not exceeded when taking into account an ample margin of safety. Finally, no significant or widespread adverse environmental effects from HCl are anticipated. Therefore, the Agency, under authority of section 112(d)(4), has determined that further control of HCl emissions from kraft and soda recovery furnaces and sulfite and semichemical combustion units is not necessary.

E. Determination of Subcategories and MACT Floors

The first step in establishing MACT floors is to determine whether the source category warrants subcategorization. In evaluating the chemical recovery process for subcategorization, the Agency took into consideration the type of equipment used in the process, the emission potential of each emission point, and any variations in the process due to pulp type. The Agency determined that the chemical recovery areas at kraft and soda pulp mills do not warrant subcategorization because the recovery areas are comparable in processes, equipment, and HAP emissions. The Agency determined that separate subcategories are warranted for sulfite and stand-alone semichemical pulp mills because the recovery processes used at sulfite and stand-alone semichemical pulp mills are specifically different from each other and from those used at kraft and soda pulp mills.

The proposed MACT floors for each category were established on an emission point basis. For existing sources at kraft and soda pulp mills, the MACT floor was established by examining the emission level achievable by the control technology used by the source at the 94th percentile (i.e., the median emission limitation achieved by the top 12 percent of sources). Because there are fewer than 30 sulfite combustion units nationwide, the proposed MACT floor for existing sources at sulfite pulp mills was established by examining the emission level achieved by the control technology used by the best-performing five existing sources at sulfite pulp mills. The MACT floor approach used for existing sources at sulfite pulp mills was also used for existing sources at stand-alone semichemical pulp mills because there are fewer than 30 semichemical combustion sources. The MACT floor technologies for new sources at kraft, soda, sulfite, and stand-alone semichemical pulp mills are based on the best-performing similar source for each subcategory. The control technologies and corresponding emission levels that represent the proposed MACT floors were determined based on technology and emission data that were available to the Administrator.

1. MACT Floors—Kraft and Soda Pulp Mills

This section provides a brief description of the MACT floor determinations for kraft and soda NDCE recovery furnaces, DCE recovery furnace systems, lime kilns, and SDT's.

a. *NDCE Recovery Furnaces.* An estimated 128 NDCE recovery furnaces operate at 96 U.S. kraft and soda pulp mills. Information regarding the furnace type, size, and add-on control devices is available for approximately 88 percent of these recovery furnaces. Ninety-seven percent of NDCE recovery furnaces are

equipped with an ESP, 2 percent are equipped with an ESP followed by a wet scrubber, and the remaining 1 percent are equipped with two wet scrubbers in series. The add-on control devices were installed primarily for control of PM emissions.

The following paragraphs describe the proposed MACT floor control technologies for new and existing kraft and soda NDCE recovery furnaces for both PM/PM HAP and total gaseous organic HAP control and the emission levels achievable with each proposed MACT floor technology.

(1) *PM and PM HAP MACT Floors.* Properly designed and operated ESP's used on kraft recovery furnaces routinely achieve PM removal efficiencies of 99 percent or greater. Although emission test data from recovery furnace ESP's on PM HAP performance are limited, available data on ESP performance indicate that those systems that achieve the greatest PM removal show the best performance for the HAP portion of the PM. (See Technical Support Document: Chemical Recovery Combustion Sources at Kraft and Soda Pulp Mills, Chapter 3; docket entry No. II–A–31.) Therefore, PM can be used as a surrogate for PM HAP's.

The NSPS for kraft pulp mills requires that PM emissions from recovery furnaces constructed, reconstructed, or modified after September 24, 1976 be less than or equal to 0.10 g/dscm (0.044 gr/dscf) of flue gas corrected to 8 percent oxygen. Approximately 39 percent of NDCE recovery furnaces are subject to the NSPS, and even more (80 percent) reportedly achieve the NSPS limit.

Long-term (monthly) PM emission data are available for eight NDCE recovery furnaces. Particulate matter emissions from each of these eight NDCE recovery furnaces varied significantly from month to month; however, PM emissions from seven of the eight NDCE recovery furnaces consistently met the NSPS limit of 0.10 g/dscm (0.044 gr/dscf) corrected to 8 percent oxygen over a 4- to 6-year period. Collectively, emissions from these seven NDCE recovery furnaces ranged from 0.002 to 0.10 g/dscm (0.001 to 0.044 gr/dscf), corrected to 8 percent oxygen. (See State of Washington Data Memo, docket entry No. II–B–59.) Thus, the long-term data demonstrate that NDCE recovery furnaces equipped with ESP's can meet the NSPS level of 0.10 g/dscm (0.044 gr/dscf) corrected to 8 percent oxygen on a long-term basis. Because greater than 6 percent of NDCE recovery furnaces are capable of meeting the NSPS limit on a long-term basis with ESP's, the proposed MACT floor PM control technology for existing kraft and soda NDCE recovery furnaces is an ESP capable of meeting the NSPS, which typically has a specific collecting area (SCA) of 100 $m^2/(m^3/sec)$ (530 ft^2/1,000 acfm). The application of the proposed MACT floor PM control technology is represented by a PM emission level of 0.10 g/dscm (0.044 gr/dscf) corrected to 8 percent oxygen.

The proposed MACT floor control technology for PM HAP is the same as the proposed MACT floor control technology for PM and is represented by a PM HAP emission level of 1.00E–03 kg/Mg (2.01E–03 lb/ton) of black liquor solids fired. The proposed MACT floor PM HAP emission level is based on available test data and is equivalent to the average PM HAP emission factor for recovery furnaces with PM emissions that achieve the NSPS level of 0.10 g/dscm (0.044 gr/dscf) corrected to 8 percent oxygen.

With respect to MACT for new sources, the best-performing PM control system of the eight NDCE recovery furnaces for which long-term PM emission data are available is an ESP with an operating SCA between 110 and 130 $m^2/(m^3/sec)$ (570 and 670 ft^2/1,000 acfm) followed by a cross-flow, packed-bed scrubber. Monthly PM emissions data from the NDCE recovery furnace with this control system varied from 0.002 to 0.025 g/dscm (0.001 to 0.011 gr/dscf) corrected to 8 percent oxygen over a 6-year period. Taking the variability of the data into consideration, a PM emission level of 0.034 g/dscm (0.015 gr/dscf) was selected to represent the MACT floor PM emission level for new NDCE recovery furnaces. Therefore, the proposed MACT floor PM control technology for new kraft and soda NDCE recovery furnaces is an ESP capable of achieving a PM emission level of 0.034 g/dscm (0.015 gr/dscf) corrected to 8 percent oxygen (i.e., an ESP with a typical SCA between 110 and 130 $m^2/[m^3/sec]$ [570 and 670 ft^2/1,000 acfm]) followed by a packed-bed scrubber.

Although the proposed MACT floor PM control technology for new NDCE recovery furnaces includes both the ESP and the cross-flow, packed-bed scrubber, the scrubber was installed as a heat recovery device and for SO_2 control and is not expected to provide much, if any, additional PM control. Because of the high PM removal efficiencies achievable with newer ESP's, the proposed MACT floor PM emission level of 0.034 g/dscm (0.015 gr/dscf) corrected to 8 percent oxygen for new NDCE recovery furnaces could be achieved with the application of the ESP alone.

A PM HAP emission level was not established for new NDCE recovery furnaces because insufficient PM HAP data are available from NDCE recovery furnaces representing MACT for new sources.

(2) *Total Gaseous Organic HAP MACT Floors.* The ESP systems applied to existing NDCE recovery furnaces conform to one of two designs: wet ESP systems or dry ESP systems. A wet ESP system uses unoxidized black liquor or water in the ESP bottom or in the PM return system. A dry ESP system includes both a dry-bottom ESP and a dry PM return system. Wet ESP systems that use black liquor or HAP-contaminated water emit higher levels of gaseous organic HAP's than dry ESP systems due to the stripping of gaseous organic HAP's from the black liquor or HAP-contaminated water in the ESP bottom or PM return system. Based on the available emission data, NDCE recovery furnaces with dry ESP systems emit, on average, approximately 72 percent less total gaseous organic HAP's than NDCE recovery furnaces with wet ESP systems.

Although information is available to classify almost all (99 percent) of NDCE recovery furnace ESP's as wet- or dry-bottom, little information is available regarding the use of black liquor or HAP-contaminated water in the recovery furnace ESP PM return systems. Based on the limited available information on ESP return systems, approximately 5 percent of NDCE recovery furnaces are estimated to be equipped with dry ESP systems. Because the estimated percentage of NDCE recovery furnaces equipped with dry ESP systems is less than 6 percent, the proposed MACT floor control technology for total gaseous organic HAP emissions from existing kraft and soda NDCE recovery furnaces is a wet ESP system, and, thus, no control of total gaseous organic HAP's is achieved at the floor. However, because NDCE recovery furnaces equipped with dry ESP systems represent the best-controlled source for total gaseous organic HAP emissions, the proposed MACT floor total gaseous organic HAP control technology for new kraft and soda NDCE recovery furnaces is a dry ESP system. Emission data from three NDCE recovery furnaces equipped with dry ESP systems indicate that a total gaseous organic HAP emission level, as measured by methanol, of 0.012 kg/Mg (0.025 lb/ton) of black liquor solids fired or less is achievable. The methanol emission level corresponds to the highest three-run average obtained for a dry ESP system on an NDCE recovery furnace plus an additional amount to

account for the variability in the dry ESP system data set and the lack of long-term data. Therefore, the total gaseous organic HAP emission level, as measured by methanol, associated with the proposed MACT floor control technology (i.e., a dry ESP system) is 0.012 kg/Mg (0.025 lb/ton) of black liquor solids fired.

b. *DCE Recovery Furnace Systems.* The DCE recovery furnace system includes the recovery furnace, DCE, and the BLO system. An estimated 83 DCE recovery furnaces are in operation at 48 U.S. kraft and soda pulp mills. An estimated 46 BLO systems are in operation at these 48 pulp mills. Of the two mills without BLO systems, one is a soda pulp mill, and the other is a kraft pulp mill. Information regarding the furnace type, size, and add-on control devices and the associated BLO systems is available for approximately 93 percent of DCE recovery furnace systems.

Like NDCE recovery furnaces, all DCE recovery furnaces are equipped with some type of add-on control device to reduce PM emissions from the furnace. In the case of DCE units, 90 percent are controlled with an ESP, 8 percent are controlled with an ESP followed by a wet scrubber, and the remaining 2 percent are controlled with two ESP's in series. As with NDCE recovery furnaces, MACT floor control technologies for DCE recovery furnace systems were selected for both PM/PM HAP and total gaseous organic HAP emissions. The following paragraphs describe the proposed MACT floor control technologies for new and existing kraft and soda DCE recovery furnace systems and the emission levels achievable with each proposed MACT floor technology.

(1) *PM and PM HAP MACT Floors.* As discussed above for NDCE recovery furnaces, properly designed and operated ESP's used on kraft recovery furnaces routinely achieve PM removal efficiencies of 99 percent or greater. Using installation dates to determine NSPS applicability, three DCE recovery furnaces (i.e., 4 percent of the DCE recovery furnace population) are subject to the NSPS emission limit of 0.10 g/dscm (0.044 gr/dscf) corrected to 8 percent oxygen for kraft recovery furnaces. Long-term (monthly) PM emission data are available for an additional four DCE recovery furnaces that are not subject to the NSPS but have consistently met the NSPS emission level of 0.10 g/dscm (0.044 gr/dscf) corrected to 8 percent oxygen over a 3- to 6-year period, even though PM emissions from each of these four DCE recovery furnaces varied significantly from month to month. Collectively, the PM emissions from these four DCE recovery furnaces varied from 0.011 to 0.10 g/dscm (0.005 to 0.044 gr/dscf) corrected to 8 percent oxygen over the 3- to 6-year period. (See State of Washington Data Memo; docket entry No. II–B–59.) The combination of those DCE recovery furnaces subject to the NSPS and those for which data show an ability to achieve the NSPS level on a long-term basis represent a total of seven DCE recovery furnaces, or 9 percent of the DCE recovery furnace population.

Because greater than 6 percent of DCE recovery furnaces are capable of meeting the NSPS PM limit on a long-term basis with ESP's, the proposed MACT floor PM control technology for existing kraft and soda DCE recovery furnace systems is an ESP capable of meeting the NSPS, which typically has an SCA of 90 $m^2/(m^3/sec)$ (430 ft^2/1,000 acfm). The application of the proposed MACT floor PM control technology is represented by a PM emission level of 0.10 g/dscm (0.044 gr/dscf) corrected to 8 percent oxygen.

The proposed MACT floor control technology for PM HAP is the same as the proposed MACT floor control technology for PM and is represented by a PM HAP emission level of 1.00E–03 kg/Mg (2.01E–03 lb/ton) of black liquor solids fired. As with existing NDCE recovery furnaces, the proposed MACT floor PM HAP emission level is equivalent to the average PM HAP emission factor for kraft and soda recovery furnaces with PM emissions that achieve the NSPS level of 0.10 g/dscm (0.044 gr/dscf) corrected to 8 percent oxygen.

The best-performing PM control system for both NDCE and DCE recovery furnaces is an ESP with an operating SCA between 110 and 130 $m^2/(m^3/sec)$ (570 and 670 ft^2/1,000 acfm) followed by a cross-flow, packed-bed scrubber. Monthly PM emissions data from the recovery furnace with this control system varied from 0.002 to 0.025 g/dscm (0.001 to 0.011 gr/dscf) corrected to 8 percent oxygen over a 6-year period. Taking the variability of the data into consideration, a PM emission level of 0.034 g/dscm (0.015 gr/dscf) was selected to represent the MACT floor PM emission level for new DCE recovery furnaces. Therefore, the proposed MACT floor PM control technology for all new kraft and soda DCE recovery furnaces is an ESP capable of achieving a PM emission level of 0.034 g/dscm (0.015 gr/dscf) corrected to 8 percent oxygen (i.e., an ESP with a typical SCA between 110 and 130 $m^2/[m^3/sec]$ [570 and 670 ft^2/1,000 acfm]) followed by a packed-bed scrubber.

Although the proposed MACT floor PM control technology for new kraft and soda DCE recovery furnaces includes both the ESP and the cross-flow, packed-bed scrubber, the scrubber was installed as a heat recovery device and for SO_2 control and is not expected to provide much, if any, additional PM control. Because of the high PM removal efficiencies achievable with newer ESP's, the proposed MACT floor PM emission level of 0.034 g/dscm (0.015 gr/dscf) corrected to 8 percent oxygen for new DCE recovery furnaces could be achieved with the application of the ESP alone.

The EPA is not proposing a MACT floor PM HAP emission level for new kraft and soda DCE recovery furnaces for the same reason stated above for new NDCE recovery furnaces.

(2) *Total Gaseous Organic HAP MACT Floors.* Four of the estimated 46 BLO systems in operation are pipeline molecular oxygen-based systems, which have no emission points. No emission data are available from DCE recovery furnaces with molecular oxygen BLO systems for comparison with DCE recovery furnaces with air-based BLO systems. Therefore, the effect of molecular oxygen BLO systems on total emissions from the DCE recovery furnace system is uncertain. With air-based BLO systems, gaseous organic HAP's are stripped from the black liquor and emitted to the atmosphere as the air bubbles and black liquor make contact. Unlike air-based systems, molecular oxygen systems use pure oxygen, and, thus, no diluents are introduced that could strip organic compounds from the black liquor; consequently, organic compounds not released from the black liquor during the oxidation process could be subsequently stripped, in theory, from the oxidized black liquor when the black liquor enters the direct contact evaporator. For this reason, molecular oxygen BLO systems are not viewed by the Agency as a control option for DCE recovery furnace systems.

The gaseous organic HAP emissions from 2 of the estimated 42 air-based BLO systems are controlled via incineration in power boilers; the remainder are uncontrolled. However, the two air-based BLO units with controlled emissions represent less than 6 percent of DCE recovery furnace systems. Therefore, the proposed MACT floor for total gaseous organic HAP control for existing kraft and soda DCE recovery furnace systems is no control.

The DCE recovery furnace systems emit more gaseous organic HAP's than

NDCE recovery furnaces because more opportunities exist for gaseous organic HAP compounds to be stripped from the black liquor. In DCE systems, gaseous organic HAP compounds can be stripped from the black liquor in the BLO system, the DCE, and the ESP system. Based on the available emission data, NDCE recovery furnaces with dry ESP systems emit approximately 93 percent less total gaseous organic HAP's than DCE recovery furnace systems.

The NDCE recovery furnaces with dry ESP systems also have lower TRS emissions compared to DCE recovery furnace systems. The need for TRS emission reductions and the need for additional recovery furnace capacity have resulted in mills converting older and smaller DCE units into larger NDCE units. Approximately 24 percent of the existing NDCE recovery furnaces are converted DCE recovery furnaces. For these reasons, and also because NDCE recovery furnaces are more energy efficient than DCE recovery furnaces, all new recovery furnace installations are of the NDCE design. Because of its lower HAP emission potential, an NDCE recovery furnace equipped with a dry ESP system was selected as the MACT floor total gaseous organic HAP control technology for all new kraft and soda NDCE recovery furnaces and DCE recovery furnace systems. This proposed MACT floor control technology is capable of achieving a total gaseous organic HAP emission level, as measured by methanol, of 0.012 kg/Mg (0.025 lb/ton) of black liquor solids fired.

c. *Lime Kilns.* An estimated 192 lime kilns operate at 124 U.S. kraft and soda pulp mills. Information regarding the lime kiln type, size, and add-on control devices is available for approximately 85 percent of these lime kilns. All of the add-on control systems in place on lime kilns are for the control of PM or TRS emissions. No add-on controls designed to remove gaseous organic HAP's are applied to lime kilns.

Gaseous organic HAP emissions from lime kilns are primarily attributable to the use of HAP-contaminated process waters in the lime mud washers and lime kiln scrubbers. Therefore, gaseous organic HAP emissions from lime kilns can be minimized by reducing the HAP content of process waters used in the lime mud washers and scrubbers. These process waters are being regulated as part of the final NESHAP for noncombustion sources at pulp and paper mills. Therefore, no MACT floor has been established for total gaseous organic HAP's for new and existing kraft and soda lime kilns as part of this proposed NESHAP. The following paragraphs describe the proposed MACT floor PM/PM HAP control technologies and the associated emission levels for existing and new kraft and soda lime kilns.

Particulate matter emissions from most (90 percent) of the lime kilns are controlled by wet scrubbers. Venturi scrubbers are the most common type of wet scrubber in use on lime kilns. Particulate matter emissions from the remaining 10 percent of lime kilns are controlled by ESP's (9 percent) or the combination of an ESP and wet scrubber (1 percent). Properly designed and operated venturi scrubbers and ESP's used on kraft lime kilns are capable of reducing PM emissions by greater than 99 percent.

The NSPS for kraft pulp mills requires that PM emissions from gas-fired lime kilns constructed, reconstructed, or modified after September 24, 1976 be less than or equal to 0.15 g/dscm (0.067 gr/dscf) of flue gas corrected to 10 percent oxygen. Approximately 19 percent of lime kilns are subject to the NSPS limit for gas-fired lime kilns, and even more (i.e., 64 percent of all lime kilns, including oil-fired lime kilns) have reported average PM emissions less than the gas-fired NSPS limit.

Long-term (monthly) PM emission data are available for four gas-fired lime kilns that are subject to the NSPS PM limit for gas-fired lime kilns. No long-term data are available for oil-fired lime kilns. Two of the four lime kilns for which long-term PM emission data are available are equipped with venturi scrubbers, and two are equipped with ESP's. Particulate matter emissions from the four lime kilns varied from 0.002 to 0.15 g/dscm (0.001 to 0.067 gr/dscf) corrected to 10 percent oxygen over a 4- to 7-year period. The long-term data demonstrate that existing lime kilns equipped with either venturi scrubbers or ESP's can meet an emission level of 0.15 g/dscm (0.067 gr/dscf) corrected to 10 percent oxygen on a long-term basis. Because greater than 6 percent of lime kilns are capable of meeting the gas-fired NSPS limit on a long-term basis with venturi scrubbers or ESP's, the proposed MACT floor control technology for existing kraft and soda lime kilns is either a venturi scrubber or an ESP. The application of these proposed MACT floor PM control technologies is represented by a PM emission level of 0.15 g/dscm (0.067 gr/dscf) corrected to 10 percent oxygen. The proposed MACT floor control technology for PM HAP is the same as the proposed MACT floor control technology for PM and is represented by a PM HAP emission level of 6.33E–03 kg/Mg (1.27E–02 lb/ton) of CaO produced. The proposed MACT floor PM HAP emission level is equivalent to the average PM HAP emission factor for lime kilns with outlet PM emissions that achieve the NSPS level of 0.15 g/dscm (0.067 gr/dscf) corrected to 10 percent oxygen.

Of the four lime kilns for which long-term PM emission data are available, the best-performing PM control system is an ESP with an operating SCA of 220 $m^2/(m^3/sec)$ (1,120 ft^2/1,000 acfm), which is substantially higher than the typical SCA for an ESP designed to meet the NSPS (i.e., 90 $m^2/[m^3/sec]$ [460 ft^2/1,000 acfm]). The monthly PM emissions from the best-performing lime kiln varied from 0.002 to 0.018 g/dscm (0.001 to 0.008 gr/dscf) corrected to 10 percent oxygen over a 7-year period. To account for the variability in the data, a PM emission level of 0.023 g/dscm (0.010 gr/dscf) was selected to represent the MACT floor PM emission level for new lime kilns. Therefore, the proposed MACT floor PM HAP control technology for new kraft and soda lime kilns is an ESP capable of achieving a PM emission level of 0.023 g/dscm (0.010 gr/dscf) corrected to 10 percent oxygen (i.e., an ESP with a typical SCA of 220 $m^2/[m^3/sec]$ [1,120 ft^2/1,000 acfm]).

A MACT floor PM HAP emission level was not established for new lime kilns for the same reasons stated above for new NDCE recovery furnaces.

d. *Smelt Dissolving Tanks.* An estimated 227 SDT's operate at 124 U.S. kraft and soda pulp mills. Information regarding the SDT size and add-on control devices is available for approximately 83 percent of the SDT's. The add-on control systems in place on SDT's are for control of PM emissions. No add-on controls designed to remove gaseous organic HAP's are applied to SDT's.

As discussed above for lime kilns, gaseous organic HAP emissions from SDT's are primarily the result of the use of HAP-contaminated process waters. The HAP-contaminated process waters are typically used in the SDT scrubbers as makeup water to the SDT. Therefore, gaseous organic HAP emissions from SDT's can be minimized by reducing the HAP content of process waters used in the SDT and SDT scrubber. However, as stated above for lime kilns, the control of HAP emissions from process waters is being regulated as part of the final NESHAP for noncombustion sources at pulp and paper mills. Therefore, no MACT floor has been established for total gaseous organic HAP emissions for new and existing kraft and soda SDT's as part of this proposed NESHAP.

Particulate matter emissions from most (87 percent) of the SDT's are

controlled by wet scrubbers. Particulate matter emissions from the majority of the remaining SDT's are controlled by mist eliminators. Based on the available performance data for wet scrubbers and mist eliminators installed on SDT's, wet scrubbers are more effective at controlling PM emissions from SDT's than mist eliminators. (See Technical Support Document: Chemical Recovery Combustion Sources at Kraft and Soda Pulp Mills, Chapter 3; docket entry No. II–A–31.) Properly designed wet scrubbers used on kraft SDT's are capable of reducing PM emissions by greater than 99 percent.

The NSPS for kraft pulp mills require that PM emissions from SDT's that are constructed, modified, or reconstructed after September 24, 1976 be less than 0.10 kg/Mg (0.20 lb/ton) of black liquor solids fired. Approximately 29 percent of SDT's are subject to the NSPS PM limit, and even more (75 percent) have reported average PM emissions less than the NSPS PM limit. Although no long-term PM emission data are available for SDT's equipped with wet scrubbers that are subject to the NSPS limit of 0.10 kg/Mg (0.20 lb/ton) of black liquor solids fired, the prevalence of wet scrubbers on SDT's and the high PM removal efficiencies achieved with this technology are sufficient to establish wet scrubbers as the proposed MACT floor PM control technology for existing kraft and soda SDT's. The application of this control technology is represented by a PM emission level of 0.10 kg/Mg (0.20 lb/ton) of black liquor solids fired. The proposed MACT floor control technology for PM HAP is the same as the proposed MACT floor control technology for PM and is represented by a PM HAP emission level of 6.20E–05 kg/Mg (1.24E–04 lb/ton) of black liquor solids fired. The proposed MACT floor PM HAP emission level is equivalent to the average PM HAP emission factor for SDT's with outlet PM emissions that achieve the NSPS PM level of 0.10 kg/Mg (0.20 lb/ton) of black liquor solids fired.

Long-term (monthly) PM emission data are available for three SDT's equipped with wet scrubbers designed to meet a PM permit limit (0.06 kg/Mg [0.12 lb/ton] of black liquor solids fired) that is more stringent than the NSPS. The high-efficiency wet scrubbers installed on these three SDT's represent the best-performing PM control systems installed on kraft and soda SDT's. Collectively, monthly PM emissions from these three SDT's varied from 0.0045 to 0.055 kg/Mg (0.009 to 0.11 lb/ton) of black liquor solids fired over a 2- to 6-year period. (See State of Washington Data Memo, docket entry No. II–-B–59.) The long-term data demonstrate that SDT's equipped with high-efficiency wet scrubbers can achieve a maximum outlet PM level of 0.06 kg/Mg (0.12 lb/ton) of black liquor solids fired on a long-term basis. Therefore, the proposed MACT floor PM HAP control technology for new kraft and soda SDT's is a high-efficiency wet scrubber capable of achieving a PM emission level of 0.06 kg/Mg (0.12 lb/ton) of black liquor solids fired.

2. MACT Floors—Sulfite Pulp Mills

An estimated 21 combustion units operate at sulfite pulp mills. Information regarding the chemical recovery equipment and add-on control devices is available for approximately 95 percent of these combustion units. Because there are less than 30 sulfite combustion units, the MACT floor for existing sources is based on the 5 best-performing sources. Thirteen of the 21 sulfite combustion units (62 percent) are equipped with fiber-bed demister systems. The remainder of the combustion units are equipped with venturi scrubbers or packed-bed scrubbers. These add-on control devices were installed on sulfite combustion units for PM control and additional SO_2 control. All sulfite combustion units are equipped with absorption towers prior to the PM control device to recover SO_2 for reuse in the pulping process.

Long-term PM emission data are available for two sulfite combustion units equipped with fiber-bed demister systems. Based on these long-term data and additional long-term data for sulfite combustion units equipped with wet scrubbers, fiber-bed demister systems are more effective than wet scrubbers at controlling PM emissions from sulfite combustion units. Monthly PM emission data from the two sulfite combustion units equipped with fiber-bed demister systems ranged from 0.005 to 0.088 g/dscm (0.002 to 0.038 gr/dscf) corrected to 8 percent oxygen over a 6- to 7-year period. Because the fiber-bed demister system represents the best-performing control technology and at least five sources are equipped with fiber-bed demister systems, this technology was selected to represent the proposed MACT floor control technology for existing sulfite combustion units. To account for variability in the data, a PM emission level of 0.092 g/dscm (0.040 gr/dscf) corrected to 8 percent oxygen was selected to represent the MACT floor PM emission level for existing sulfite combustion units.

Monthly PM emission data from the best-performing sulfite combustion unit equipped with a fiber-bed demister system ranged from 0.009 to 0.039 g/dscm (0.004 to 0.017 gr/dscf) corrected to 8 percent oxygen over a 6-year period. This sulfite combustion unit also is equipped with a wet scrubber between the SO_2 absorption towers and the fiber-bed demister system. The scrubber was added to the system for additional PM and SO_2 control. Because the best-performing source is equipped with a wet scrubber and fiber-bed demister system, the combination of these technologies was selected to represent the proposed MACT floor control technology for new sulfite combustion units. To account for the variability in the data, a PM emission level of 0.046 g/dscm (0.020 gr/dscf) corrected to 8 percent oxygen was selected to represent the MACT floor PM emission level for new sulfite combustion units.

3. MACT Floors—Stand-Alone Semichemical Pulp Mills

An estimated 14 chemical recovery combustion units operate at 13 U.S. stand-alone semichemical pulp mills. Information regarding the design and operation of chemical recovery combustion units is available for all of these units. Although chemical recovery combustion units at stand-alone semichemical pulp mills are equipped with a variety of PM control devices, insufficient PM data and no PM HAP data are available to establish MACT floors for PM or PM HAP. In addition, none of the existing semichemical mills are currently controlling gaseous organic HAP emissions from semichemical combustion sources. Therefore, no control of total gaseous organic HAP emissions is achieved at the MACT floor for existing or new sources.

However, the Agency has selected a beyond-the-floor option to represent MACT for gaseous organic HAP control for existing and new semichemical combustion sources. The beyond-the-floor option is based on the use of an RTO preceded by a wet ESP. (A wet ESP or other PM control device is necessary because the RTO requires a high degree of PM control for proper operation.) Pilot study results at a stand-alone semichemical mill indicate that an RTO is well-suited to reducing gaseous organic HAP emissions from fluidized-bed reactors, which emit the highest known quantities of HAP's of the combustion technologies currently in use at semichemical pulp mills. The semichemical mill that conducted the pilot study is currently installing a full-scale RTO based on the results of the pilot study.

During the pilot study, the RTO reduced THC emissions from the mill's fluidized-bed reactor by an average of 97 percent. However, because the RTO has not yet been demonstrated full-scale at a semichemical mill, EPA estimated the total gaseous organic HAP emission level that corresponds to MACT using the average THC emission reduction (90 percent) achieved during the pilot study test run with the lowest level of control. The estimated 90 percent THC emission reduction was applied to the average uncontrolled THC emissions (measured as carbon) from a fluidized-bed reactor. Based on the results of the calculation, the application of an RTO preceded by a wet ESP is estimated to be representative of either a total gaseous organic HAP emission level of 1.49 kg/Mg (2.97 lb/ton) of black liquor solids fired, or a 90 percent reduction in total gaseous organic HAP emissions. (Total gaseous organic HAP's are measured as THC, as carbon, in both cases.)

F. Discussion of Regulatory Alternatives

The proposed standards were selected based on a review of the regulatory alternatives developed for the affected sources. Table 3 presents the regulatory alternatives examined for existing affected sources at kraft and soda pulp mills; Tables 4 and 5 present the regulatory alternatives for existing affected sources at sulfite and stand-alone semichemical pulp mills, respectively. For existing affected sources, regulatory alternative I (RA I) represents the proposed MACT floor, and additional regulatory alternatives represent beyond-the-MACT-floor options. The regulatory alternatives are increasingly more stringent in terms of total HAP emission reduction requirements. The most stringent regulatory alternative examined for existing sources is representative of MACT for new sources. A discussion of the regulatory alternatives is provided below.

TABLE 3.—REGULATORY ALTERNATIVES FOR EXISTING AFFECTED SOURCES AT KRAFT AND SODA PULP MILLS

Regulatory alternatives (RA)	Basis of alternative			
	Recovery furnace systems		Smelt dissolving tanks	Lime kilns
	NDCE	DCE		
RAI (MACT floor for existing sources).	NDCE recovery furnace with ESP_1	DCE recovery furnace with ESP_1	Wet $scrubber_1$	ESP_1 or wet $scrubber_1$
RA II	NDCE recovery furnace with ESP_1	DCE recovery furnace with ESP_1 plus BLO vent controlled by incineration.	Wet $scrubber_1$	ESP_1 or wet $scrubber_1$
RA III	NDCE recovery furnace with dry ESP_1 system.	NDCE recovery furnace with dry ESP_1 system.	Wet $scrubber_1$	ESP_1 or wet $scrubber_1$
RA IV (MACT floor for new sources)[a].	NDCE recovery furnace with dry ESP_2 system and packed-bed scrubber.	NDCE recovery furnace with dry ESP_2 system and packed-bed scrubber.	Wet $scrubber_2$	ESP_2

[a] Tighter PM control is achieved for new sources through the use of a more efficient ESP design (ESP_2) or scrubber design (wet $scrubber_2$) than that used under regulatory alternatives I through III (ESP_1 or wet $scrubber_1$) for existing sources.

TABLE 4.—REGULATORY ALTERNATIVES FOR EXISTING AFFECTED SOURCES AT SULFITE PULP MILLS

Regulatory alternatives (RA)	Basis of alternative
RA I (MACT floor for existing sources)	Fiber-bed demister system.
RA II (MACT floor for new sources)	Wet scrubber followed by fiber-bed demister system.

TABLE 5.—REGULATORY ALTERNATIVES FOR EXISTING AFFECTED SOURCES AT SEMICHEMICAL PULP MILLS

Regulatory alternatives (RA)	Basis of alternative
RA I (MACT floor for existing and new sources)	No control.
RA II (Beyond-the-MACT floor for existing and new sources)	Wet ESP followed by regenerative thermal oxidizer.

1. Kraft and Soda Pulp Mills

As shown in Table 5, four regulatory alternatives were considered for MACT selection for affected sources at kraft and soda pulp mills. The first regulatory alternative (RA I) represents the proposed MACT floor for existing affected sources, and the other three alternatives (RA II, RA III, and RA IV) represent beyond-the-MACT-floor options. Each of these regulatory alternatives is discussed below by emission point.

a. *NDCE Recovery Furnaces.* For NDCE recovery furnaces, the regulatory alternatives are based on two levels of PM HAP control and two levels of total gaseous organic HAP control, as measured by methanol. Under RA I (proposed MACT floor for existing sources), PM HAP emissions would be controlled through the application of an ESP with a typical operating SCA of 100 $m^2/(m^3/sec)$ (530 ft^2/1,000 acfm); the ESP would reduce PM HAP emissions by greater than 99 percent.

The regulatory alternatives RA II and RA III are based on the same PM HAP control equipment specifications for the NDCE recovery furnace as RA I (the proposed MACT floor); therefore, no further reduction in PM HAP emissions would be achieved under RA II and RA III than that achieved at the floor. However, under RA III, total gaseous organic HAP emissions would be controlled to levels beyond the proposed MACT floor through the application of a dry ESP system (i.e., a dry-bottom ESP with a dry PM return system). The use of a dry ESP system would result in a reduction in total gaseous organic HAP emissions from those mills currently using wet ESP systems (i.e., wet-bottom ESP's or dry-bottom ESP's with wet PM return systems). Wet ESP systems emit greater quantities of gaseous organic HAP's because these compounds are stripped from the black liquor in the bottom of the ESP and in the PM return system.

The most stringent beyond-the-floor regulatory alternative (RA IV) combines the conversion of the ESP system with more stringent PM HAP control requirements for the furnace. The more stringent PM HAP control would be obtained through the application of an ESP followed by a packed-bed scrubber; the typical operating SCA of the ESP would be between 110 and 130 $m^2/(m^3/sec)$ (570 and 670 $ft^2/1,000$ acfm). Although the packed-bed scrubber is capable of reducing HCl emissions from the NDCE recovery furnace by as much as 99 percent, as stated in section IV.E.1.a of this preamble, the ESP could be used alone to meet the PM emission limit for new NDCE recovery furnaces because the scrubber removes little, if any, of the PM remaining in the gas stream exiting the ESP. Because the PM HAP control costs for RA IV are based on an ESP followed by a packed-bed scrubber, those costs are overstated. Regulatory alternative IV is representative of the best-controlled similar source for NDCE recovery furnaces.

b. *DCE Recovery Furnace Systems.* For DCE recovery furnace systems, the regulatory alternatives are based on two levels of PM HAP control and three levels of total gaseous organic HAP control, as measured by methanol. Under the proposed MACT floor regulatory alternative RA I, PM HAP emissions would be reduced through the application of an ESP with a typical operating SCA of 90 $m^2/(m^3/sec)$ (430 $ft^2/1,000$ acfm).

The beyond-the-floor regulatory alternative RA II is based on the same PM HAP control equipment specifications for the DCE recovery furnace as RA I; however, total gaseous organic HAP emissions also would be reduced by controlling the vent gases from air-based BLO systems to a beyond-the-floor level via incineration. The use of an incineration device such as a power boiler or thermal oxidizer could achieve total gaseous organic HAP emission reductions of 98 percent or greater from air-based BLO systems, which would translate to a 38 percent reduction of total gaseous organic HAP emissions from the entire DCE recovery furnace system.

The beyond-the-floor regulatory alternative RA III is based on the conversion of the DCE recovery furnace to an NDCE recovery furnace equipped with a dry ESP system with a typical operating SCA of 100 $m^2/(m^3/sec)$ (530 $ft^2/1,000$ acfm). The conversion of the DCE recovery furnace would reduce total gaseous organic HAP emissions from the DCE recovery furnace system by approximately 93 percent. No further reduction in PM HAP emissions would be achieved under RA III than that achieved at the floor (RA I) for DCE recovery furnaces.

The most stringent beyond-the-floor regulatory alternative (RA IV) combines the conversion of the DCE recovery furnace with more stringent PM HAP control requirements for the furnace. The more stringent PM HAP control requirements are based on an ESP with a typical operating SCA between 110 and 130 $m^2/(m^3/sec)$ (570 and 670 $ft^2/1,000$ acfm) followed by a packed-bed scrubber. Although the packed-bed scrubber is capable of reducing HCl emissions from the DCE recovery furnace by as much as 99 percent, as stated in section IV.E.1.a of this preamble, the ESP could be used alone to meet the PM emission limit for new recovery furnaces because the scrubber removes little, if any, of the PM remaining in the gas stream exiting the ESP. Because the PM HAP control costs for RA IV are based on an ESP followed by a packed-bed scrubber, those costs are overstated. Regulatory alternative IV is representative of the best-controlled similar source for DCE recovery furnace systems.

c. *Smelt Dissolving Tanks.* For SDT's, the regulatory alternatives are based on two levels of PM HAP control. Regulatory alternatives I through III are based on the use of a wet scrubber designed to meet the NSPS PM emission level. The beyond-the-floor regulatory alternative RA IV is based on the use of a high-efficiency wet scrubber designed to reduce PM emissions from SDT's. Based on current information, no controls more stringent than the use of high-efficiency wet scrubbers are being applied to SDT's.

d. *Lime Kilns.* Two PM HAP control levels were considered for lime kilns. Under regulatory alternatives I through III, the PM control level is based on the level achievable with a wet scrubber or an ESP designed to meet the NSPS. Under the beyond-the-floor regulatory alternative RA IV, increased PM control is obtained through the application of an ESP with a typical operating SCA of 220 $m^2/(m^3/sec)$ (1,120 $ft^2/1,000$ acfm).

2. Sulfite Pulp Mills

As shown in Table 4, two regulatory alternatives were considered for sulfite combustion units. Both of these alternatives would reduce PM HAP emissions from the sulfite combustion unit. Regulatory alternative I represents the proposed MACT floor for existing sulfite combustion units and is based on the use of a fiber-bed demister system. Regulatory alternative II is more stringent than the proposed MACT floor option and is based on the use of a wet scrubber followed by a fiber-bed demister system.

3. Stand-Alone Semichemical Pulp Mills

As shown in Table 5, two regulatory alternatives for total gaseous organic HAP's were considered for combustion sources at stand-alone semichemical pulp mills. Regulatory alternative I represents the MACT floor for existing sources, which is no control. Regulatory alternative II is more stringent than the MACT floor option and is based on the use of a wet ESP followed by an RTO to reduce HAP emissions from the semichemical combustion units.

G. Selection of Proposed Standards for Existing and New Sources

1. Existing Sources

The proposed standards for each emission point are based on the emission level achievable when MACT is applied to that source. For existing sources, MACT was determined by evaluating the regulatory alternatives presented in Tables 3 through 5. The Agency selected RA I, or the MACT floor alternative, as MACT for existing sources at kraft, soda, and sulfite pulp mills. The decision to select RA I was based on a comparison of the costs and benefits of the regulatory alternatives for existing sources at kraft, soda, and sulfite pulp mills. The Agency concluded that the benefits of additional controls beyond the MACT floor for kraft, soda, and sulfite pulp mills do not outweigh the high capital costs (shown in Tables 6 and 7).

TABLE 6.—NATIONWIDE COSTS ASSOCIATED WITH REGULATORY ALTERNATIVES FOR KRAFT AND SODA AFFECTED SOURCES

Regulatory alternatives (RA)	Total capital investment, dollar	Total annual cost, dollar/yr
RA I (MACT floor for existing sources)	219,000,000	23,000,000

TABLE 6.—NATIONWIDE COSTS ASSOCIATED WITH REGULATORY ALTERNATIVES FOR KRAFT AND SODA AFFECTED SOURCES—Continued

Regulatory alternatives (RA)	Total capital investment, dollar	Total annual cost, dollar/yr
RA II (Beyond the floor for existing sources)	343,000,000	57,000,000
RA III (Beyond the floor for existing sources)	1,450,000,000	64,400,000
RA IV (Beyond the floor for existing sources; MACT floor for new sources)	2,080,000,000	152,000,000

TABLE 7.—NATIONWIDE COSTS ASSOCIATED WITH REGULATORY ALTERNATIVES FOR SULFITE AFFECTED SOURCES

Regulatory alternatives (RA)	Total capital investment, dollar	Total annual cost, dollar/yr
RA I (MACT floor for existing sources)	11,400,000	5,120,000
RA II (Beyond the floor for existing sources; MACT floor for new sources)	19,600,000	8,770,000

TABLE 8.—NATIONWIDE COSTS ASSOCIATED WITH REGULATORY ALTERNATIVES FOR SEMICHEMICAL AFFECTED SOURCES

Regulatory alternatives (RA)	Total capital investment, dollar	Total annual cost, dollar/yr
RA I (MACT floor for existing and new sources)	0	0
RA II (Beyond the floor for existing and new sources)	28,100,000	6,860,000

The Agency selected RA II, or the beyond-the-floor alternative, as MACT for existing sources at stand-alone semichemical pulp mills. The decision to select RA II was based on (1) the suitability of RTO technology for use with fluidized-bed reactors, which emit the highest quantities of gaseous organic HAP's of the chemical recovery combustion technologies currently in use at stand-alone semichemical pulp mills; (2) the plans of one semichemical mill to install a full-scale RTO system (preceded by a wet ESP) following a successful RTO pilot study; and (3) the low cost-effectiveness value associated with a combination wet ESP and RTO. (The cost-effectiveness value is less than $2,800/Mg HAP's [$2,500/ton HAP's] based on conservative cost estimates.) Table 8 presents the costs associated with the regulatory alternatives for existing sources at stand-alone semichemical pulp mills.

Information on the costs and environmental impacts of each alternative can be found in the memorandum entitled ''Nationwide Costs, Environmental Impacts, and Cost-Effectiveness of Regulatory Alternatives for Kraft, Soda, Sulfite, and Semichemical Combustion Sources'' (docket entry No. II–B–63). The economic impacts of each alternative are discussed in ''Economic Analysis for the National Emission Standards for Hazardous Air Pollutants for Source Category: Pulp and Paper Production; Effluent Limitations Guidelines, Pretreatment Standards, and New Source Performance Standards: Pulp, Paper, and Paperboard Category—Phase I'' (docket entry No. II–A–32), hereafter referred to as the ''Economic Analysis Document.''

2. New Sources

The most stringent regulatory alternatives examined for existing sources (RA IV for kraft and soda pulp mills; RA II for sulfite pulp mills; and RA II for stand-alone semichemical pulp mills) are representative of MACT for new sources. The proposed standards are equivalent to the emission level achieved by the application of MACT. The proposed new source MACT for kraft and soda pulp mills is represented by (1) an NDCE recovery furnace equipped with a dry ESP system with an SCA between 110 and 130 $m^2/(m^3/sec)$ (570 and 670 $ft^2/1,000$ acfm) followed by a packed-bed scrubber for both NDCE and DCE recovery furnaces, (2) a wet scrubber designed to meet a PM emission limit of 0.06 kg/Mg (0.12 lb/ton) of black liquor solids fired for SDT's, and (3) an ESP with an SCA of 220 $m^2/(m^3/sec)$ (1,120 $ft^2/1,000$ acfm) for lime kilns. The proposed new source MACT for sulfite combustion units is represented by a wet scrubber followed by a fiber-bed demister system. The proposed new source MACT for semichemical combustion units is represented by a wet ESP followed by an RTO.

H. Selection of Format of the Standards

1. PM HAP Standards for Kraft and Soda Pulp Mills

In selecting the type and format of the proposed PM HAP standard for kraft and soda pulp mills, the Agency took into consideration the fact that the HAP fraction of the PM emitted was small (approximately 0.25 percent). Consequently today's proposed standards provide owners and operators of existing affected sources at kraft and soda pulp mills several alternatives for meeting the proposed PM HAP standards. Owners or operators of existing affected sources would be allowed to comply with either the PM or the PM HAP emission limit set for each source. In addition, as an alternative to meeting either the PM or PM HAP emission limits for each existing affected source, the proposed rule would allow owners or operators to comply with the PM HAP standards by using a bubble compliance alternative that groups PM or PM HAP emissions from all existing sources together. Under the proposed bubble compliance alternative, owners or operators could control PM or PM HAP emissions more than required at one emission point, where control costs are relatively low, in return for a comparable relaxation of controls at a second emission point where control costs are higher. This approach allows the owner or operator the maximum degree of flexibility in developing the PM or PM HAP control strategy for existing sources in the chemical recovery area while reducing HAP emissions to the same levels that would be achieved through the application of MACT for each affected source.

The proposed bubble compliance alternative only applies to existing sources at kraft and soda pulp mills.

New sources must meet the applicable PM emission limits proposed for new sources. The use of the bubble was limited to existing sources because (1) new sources historically have been held to stricter standards than existing sources, and (2) state-of-the-art equipment design and add-on controls can be integrated and installed most cost effectively during construction of new sources.

The PM emission limits are provided in units of g/dscm (gr/dscf) for kraft recovery furnaces and lime kilns and units of kg/Mg (lb/ton) of black liquor solids fired for SDT's to be consistent with the NSPS for kraft pulp mills. The PM HAP emission rates are provided in units of kg/Mg (lb/ton) of black liquor solids fired because of the low PM HAP concentrations present in exhaust gases from affected sources at kraft and soda pulp mills.

2. PM Standards for Sulfite Pulp Mills

In selecting the type and format of the proposed PM standard for sulfite pulp mills, the Agency took into consideration the limited amount of PM HAP data available for sulfite combustion units. Because very little PM HAP data are available from sulfite combustion units, PM is used as a surrogate for PM HAP, and an alternate PM HAP standard is not provided. In addition, because (1) emissions from multiple sulfite combustion units at the same sulfite mill are typically controlled by the same equipment and (2) sulfite combustion units are the only affected source at sulfite mills, a ''bubble'' equation was not developed for sulfite pulp mills. The PM emission limits for both new and existing sulfite combustion units are based on available long-term PM emission data for sulfite combustion units in the State of Washington. The State of Washington data are expressed as PM concentrations [e.g., g/dscm (gr/dscf)], corrected to 8 percent oxygen. Therefore, the PM emission limits for new and existing sulfite combustion units are in concentration units, corrected to 8 percent oxygen.

3. Total Gaseous Organic HAP Standard for Kraft and Soda Pulp Mills

In selecting the type and format of the proposed total gaseous organic HAP standard for new kraft and soda NDCE recovery furnaces and DCE recovery furnace systems, the Agency considered the following facts: (1) Methanol is the primary HAP for which emission data are available, (2) the emission mechanism for methanol is the same as for other gaseous organic HAP's, and (3) emissions of methanol from well-controlled sources are low (less than 5 ppm_v). Consequently, the Agency elected to use methanol as a surrogate for total gaseous organic HAP's and establish a methanol emission limit in the form of a mass emission rate (i.e., kg/Mg [lb/ton] of black liquor solids fired).

4. Total Gaseous Organic HAP Standard for Stand-Alone Semichemical Pulp Mills

In selecting the type and format of the proposed total gaseous organic HAP standard for semichemical combustion sources, the Agency considered the following facts: (1) Approximately half of the affected sources at stand-alone semichemical pulp mills would require add-on controls to reduce HAP emissions, while the other half likely could meet the total gaseous organic HAP limit without add-on controls and/or could reduce HAP emissions through process changes, and (2) emissions from semichemical combustion units are highly variable. Therefore, the Agency elected to allow affected sources to meet either an emission limit (in units of kg/Mg [lb/ton] of black liquor solids fired) or a percent reduction to provide flexibility and to accommodate the expected differences in emission levels and control strategies at stand-alone semichemical pulp mills. The emission limit and percent reduction are both based on measurements of THC (measured as carbon) as a surrogate for total gaseous organic HAP's because THC data correlate with available HAP data.

I. Selection of Monitoring Requirements

To ensure compliance with today's proposed PM HAP standards, owners or operators of recovery furnaces and lime kilns equipped with ESP's would be required to maintain opacity levels below a specified level. Owners or operators of affected sources equipped with control devices other than ESP's would be required to establish control device or process operating parameter ranges that indicate the control device or process is being operated and maintained in accordance with good air pollution control practices. Owners or operators complying with the proposed total gaseous organic HAP limit for new kraft and soda recovery furnaces that use an NDCE recovery furnace with a dry ESP system are exempt from monitoring requirements for gaseous organic HAP's because the use of this equipment ensures continuous compliance with the emission limit.

Today's standards include two levels of monitoring. Each monitoring level specifies maximum opacities (ESP's only) and a maximum frequency with which the opacity or monitored parameters may exceed established levels. If the conditions of the first monitoring level are exceeded, the owner or operator would be required to implement the corrective actions contained in their SSM plan to bring the operating parameter or opacity levels back to established levels. Exceedance of the conditions of the second level would constitute a violation of the standard. The purpose of the two-level monitoring appproach is to prevent a violation from occurring by requiring the owner or operator to correct operating parameter or opacity excursions before the threat of a violation arises.

Owners or operators of kraft and soda SDT's and lime kilns and sulfite combustion units equipped with wet scrubbers would be required to establish a range of values for scrubber pressure drop and liquid flow rate that indicate compliance with today's PM HAP standards. The Agency selected the proposed monitoring parameters for wet scrubbers because these parameters are reliable indicators of PM and PM HAP control device performance.

For consistency with the NSPS for kraft pulp mills, the Agency adopted the following requirements from the NSPS: (1) The use of continuous opacity monitors to monitor PM emissions from ESP's; (2) the opacity level (i.e., 35 percent) indicating a violation of PM or PM HAP emission limits for existing kraft and soda recovery furnaces equipped with ESP's; and (3) the maximum allowable opacity exceedance frequency of 6 percent of the semiannual reporting period. For new kraft and soda recovery furnaces, a 6-minute average opacity level of 20 percent was selected as the opacity level that, if exceeded for 10 consecutive 6-minute periods, would require corrective action by the owner or operator. An opacity level of 20 percent was chosen because the kraft recovery furnace that represents the new source MACT floor for PM control is subject to a State opacity limit of 20 percent.

Although the proposed PM emission limit for existing kraft and soda lime kilns is equivalent to the NSPS PM emission limit for gas-fired lime kilns, the monitoring requirement for determining compliance with the proposed PM emission limit is not equivalent to the NSPS monitoring requirement. The NSPS does not include an opacity limit for lime kilns. Under the proposed rule, the Agency selected 20 percent as the opacity level that, if exceeded for 10 consecutive 6-minute periods, would require

corrective action by the owner or operator, and if exceeded for more that 6 percent of any semiannual reporting period, would constitute a violation of the standard. An opacity level of 20 percent was chosen because a number of newer existing lime kilns equipped with ESP's are currently subject to State opacity limits of 20 percent.

The Agency selected temperature as the operating parameter to be monitored and recorded for sources complying with the total gaseous organic HAP emission standard for semichemical combustion units through the use of an RTO because the temperature of the RTO is an indicator of total gaseous organic HAP control.

The Agency selected a 3-hour averaging time for calculating monitoring parameter values for the purpose of determining possible violations of the standard because (1) EPA test methods referenced in today's proposed rule require the owner or operator to perform a minimum of three 1-hour test runs, and (2) the limits of the established range of parameter values would be based on the average values obtained using all test data obtained during the performance test.

J. Selection of Test Methods

The following discussion identifies the test methods that are to be used for compliance determinations.

Test Method 5, ''Determination of Particulate Emissions from Stationary Sources'' (40 CFR part 60, appendix A)—in conjunction with either the integrated sampling techniques of Test Method 3, ''Gas Analysis for the Determination of Dry Molecular Weight'' (40 CFR part 60, appendix A) or Test Method 3A, ''Determination of Oxygen and Carbon Dioxide Concentrations in Emissions from Stationary Sources'' (40 CFR part 60, appendix A)—is the selected test method for determining compliance with the PM emission standards for kraft and soda recovery furnaces, SDT's, and lime kilns and sulfite combustion units. Test Method 5 was used to collect the PM emission data that form the basis of the PM standards proposed for kraft, soda, and sulfite combustion sources and also is the required test method for measuring PM from sources subject to the NSPS for kraft pulp mills.

Test Method 17, ''Determination of Particulate Matter Emissions from Stationary Sources (In-Stack Filtration Method),'' may be used as an alternative to Test Method 5 if a constant value of 0.009 g/dscm (0.004 gr/dscf) is added to the results of Test Method 17 and the stack temperature is no greater than 205 °C (400 °F). Owners and operators of sources subject to the NSPS for kraft pulp mills are allowed to use Test Method 17 as an alternative to Test Method 5 for demonstrating compliance with the PM standards of the NSPS, and, therefore, today's proposed rule makes the same allowance to be consistent with the NSPS.

Test Method 29, ''Determination of Metals Emissions from Stationary Sources'' (40 CFR part 60, appendix A) is the selected test method for determining compliance with the PM HAP emission standards for kraft and soda recovery furnaces, SDT's, and lime kilns. Test Method 29 can also be used as an alternative to Test Method 5 for measuring PM emissions. The PM HAP data upon which the PM HAP emission limits for kraft and soda combustion sources are based were collected before Test Method 29 was proposed using a variety of test methods that are similar or identical to Test Method 29. Test Method 29 collects mercury in part with impingers filled with a solution of potassium permanganate. Because manganese, a component of potassium permanganate, is also a target analyte for Test Method 29, extreme caution should be used to ensure that the potassium permanganate used to collect mercury does not contaminate the portions of the sample that will be analyzed for manganese. To eliminate the possibility of contamination, the Agency will allow operators or owners the option of measuring all of the target PM HAP's, except mercury, with Test Method 29 and making a separate measurement of the mercury using Test Method 101A, ''Determination of Particulate and Gaseous Mercury Emissions from Sewage Sludge Incinerators'' (40 CFR part 61, appendix A).

Test Method 308, ''Procedure for Determination of Methanol Emissions from Stationary Sources'' (40 CFR part 63, appendix A) is being promulgated today as part of the final NESHAP for noncombustion sources in the pulp and paper industry and is the test method for determining compliance with the total gaseous organic HAP emission limit for new kraft and soda NDCE recovery furnaces and any new DCE recovery furnace systems. The methanol data upon which the total gaseous organic HAP emission limit for new kraft and soda NDCE recovery furnaces and new DCE recovery furnace systems is based were collected using a test method developed by the National Council of the Paper Industry for Air and Stream Improvement that served as the basis for Test Method 308. Performance testing using Test Method 308 (or any other approved test method for methanol emissions from kraft and soda recovery furnaces) would only be required for those new sources that choose to comply with total gaseous organic HAP emission limit for new kraft and soda recovery furnaces by using equipment other than an NDCE recovery furnace equipped with a dry ESP system.

Test Method 25A, ''Determination of Total Gaseous Organic Concentration using a Flame Ionization Analyzer'' (40 CFR part 60, appendix A) is the selected test method for determining compliance with the total gaseous organic HAP emission limit for semichemical combustion units. The THC data upon which the total gaseous organic HAP emission limit for semichemical combustion units is based were collected using Test Method 25A.

K. Selection of Reporting and Recordkeeping Requirements

The owner or operator of any kraft, soda, sulfite or stand-alone semichemical pulp mill subject to these standards would be required to fulfill the reporting and recordkeeping requirements outlined in § 63.10 of the General Provisions. These requirements include those associated with startup, shutdown, or malfunctions; operation and maintenance records; compliance monitoring system records; performance test data and reporting; quarterly reports of no excess emissions; and quarterly reports of exceedances of the emission limits. The owner or operator of any kraft, soda, sulfite or stand-alone semichemical pulp mill subject to these standards would be required to submit quarterly reports of any exceedances of monitored operating parameter values required under the proposed rule. These quarterly reports must contain the monitored operating parameter value readings for the periods constituting exceedances and a description and timing of steps taken to address the cause of the exceedances.

L. Relationship to Other Regulations

This section of the preamble discusses the interrelationship between today's proposed regulation and other federal regulations covering pulp mills. The purpose of this section is to document the Agency's evaluation of pertinent rules in an effort to minimize the burden on the industry and enforcement authorities. The Agency is interested in hearing from all interested parties on specific suggestions for reducing the overall burden of the rule without jeopardizing the enforceability of the rules or the Agency's overall emission reduction goals.

1. Noncombustion Source Rule and Chemical Recovery Combustion Source Rule

As mentioned previously in this notice (See section II–A, Background), EPA is promulgating effluent limitations guidelines and standards for the control of wastewater pollutants, as well as NESHAP for noncombustion sources in the pulp and paper industry as part of today's cluster rule. During the development of today's proposed chemical recovery combustion source NESHAP, the Agency examined both the chemical recovery combustion source rule and the noncombustion source rule to identify areas where the reporting and recordkeeping requirements of the rules could be minimized. Once the combustion source NESHAP has been promulgated, any of the initial notifications required by § 63.7(b) of subpart A can be combined for both NESHAP and a single notification submitted to the appropriate authority. However, some reporting and recordkeeping requirements are specific to the individual regulations because the rules cover different emission points at the pulp mill. To minimize the overall burden on the industry, the Agency made an effort to ensure that today's proposed NESHAP for chemical recovery combustion sources contains only the minimum amount of recordkeeping necessary to demonstrate compliance with the rule.

2. NSPS (subpart BB of part 60) and Chemical Recovery Combustion Source Rule

The NSPS for kraft pulp mills and the chemical recovery combustion source rule proposed today are closely related because both rules cover some of the same emission points. As noted in section III.B of this preamble, today's proposed rule allows the use of PM as a surrogate for PM HAP. Both of the rules regulate PM emissions from recovery furnaces, lime kilns, and SDT's at kraft pulp mills. In addition, the proposed PM emission limits for existing kraft and soda recovery furnaces, SDT's and lime kilns are the same as the NSPS limits for kraft recovery furnaces, SDT's and gas-fired lime kilns. However, the proposed NESHAP regulates emissions from both new and existing affected sources, and, therefore, would regulate emissions from affected sources not currently impacted by the NSPS.

The PM emission limits in today's proposed rule for new and reconstructed affected sources at kraft pulp mills are more stringent than the NSPS PM limits. Also, today's proposed rule provides alternate PM HAP standards for existing affected sources. In addition, unlike the NSPS, today's proposed rule would allow owners or operators of existing kraft or soda pulp mills to meet an overall PM or overall PM HAP emission limit that includes all existing affected sources at the mill (i.e., the proposed bubble compliance alternative). However, owners or operators that choose to comply with the PM HAP standards of this proposed NESHAP by using the proposed bubble compliance alternative must continue to comply with the NSPS for kraft pulp mills by ensuring that existing affected sources subject to the NSPS continue to meet the NSPS PM limits specified for those sources.

Today's proposed rule adopts many of the monitoring requirements in the NSPS. (See section III.D, Monitoring Requirements and Compliance Provisions.) Requirements adopted from the NSPS include those specifying the parameters to be monitored and frequency of monitoring, the level of opacity for existing recovery furnaces, and the required accuracy of monitoring equipment.

In addition to requirements adopted from the NSPS, today's proposed rule would require owners or operators of control systems other than ESP's to establish ranges of monitored parameters during initial compliance testing and to operate control systems within the established range. Today's proposed rule also sets intermediate opacity levels and frequencies of exceedances of established operating parameter ranges and opacity levels that would not indicate a violation of the standard but that would require the owner or operator to initiate the corrective actions identified in their SSM plan. Today's proposed rule also would require owners or operators of new recovery furnaces or new or existing lime kilns at kraft and soda pulp mills to monitor opacity levels and would specify a maximum opacity level of 20 percent rather than 35 percent, as is specified in the NSPS for kraft recovery furnaces.

The recordkeeping burden is different for the NSPS and today's proposed rule. Under the NSPS, the monitored values must be recorded once per shift. In today's proposed rule, the monitored values would be required to be recorded on a continuous basis, with the possible exception of when a source is controlled by a device or system other than an ESP, wet scrubber, or RTO. In such cases, the owner or operator would be required to obtain approval from the applicable permitting authority for a monitoring plan that proposes less frequent monitoring.

Another area where the two rules differ is the reporting requirements. For example, the General Provisions to part 60 (followed in the NSPS for kraft pulp mills) require only a 30-day prior notice before the performance test date; however the General Provisions to part 63 (i.e., the General Provisions for NESHAP) require notification 60 days prior to the performance test date. Unless stated otherwise, today's proposed rule follows the General Provisions to part 63.

3. New Source Review/Prevention of Significant Deterioration Applicability

The proposed level of gaseous organic HAP control for stand-alone semichemical combustion sources is based on the use of an RTO. The Agency expects that owners or operators of sources that cannot meet the total gaseous organic HAP emission limit (as THC) without add-on controls would install an RTO to comply with the proposed NESHAP. However, as demonstrated during a pilot study, RTO's can generate NO_X emissions during normal operation. The emission increases of NO_X may be of such magnitude to trigger the need for preconstruction permits under the nonattainment new source review (NSR) or prevention of significant deterioration (PSD) program (hereinafter referred to as major NSR).

In a similar situation regarding the MACT standards for noncombustion sources in the pulp and paper industry that are being promulgated today as part of the pulp and paper industry cluster rule, industry and some States have commented extensively that in developing the proposed rule, EPA did not take into account the impacts that would be incurred in triggering major NSR. Commenters indicated that major NSR would: (1) Cost the pulp and paper industry significantly more for permitting and implementation of additional SO_2 or NO_X controls than predicted by EPA; (2) impose a large permitting review burden on State air quality offices; and (3) present difficulties for mills to meet the proposed NESHAP compliance schedule of 3 years due to the time required to obtain a preconstruction permit. Industry commenters have stated that the pollution control project (PCP) exemption allowed under the current PSD policy provides inadequate relief from these potential impacts and recommended including specific language in the proposed rule exempting MACT compliance projects from NSR/PSD.

In a July 1, 1994 guidance memorandum issued by the EPA (available on the TTN; see ''Pollution Control Projects and New Source Review (NSR) Applicability'' from John S. Seitz, Director, OAQPS, to EPA Regional Air Division Directors), the EPA provided guidance for permitting authorities on the approvability of PCP exclusions for source categories other than electric utilities. In the guidance, the EPA indicated that add-on controls and fuel switches to less polluting fuels qualify for an exclusion from major NSR. To be eligible to be excluded from otherwise applicable major NSR requirements, a PCP must, on balance, be ''environmentally beneficial,'' and the permitting authority must ensure that the project will not cause or contribute to a violation of the national ambient air quality standards (NAAQS) or PSD increment, or adversely affect visibility or other air quality related values (AQRV) in a Class I area, and that offsetting reductions are secured in the case of a project which would result in a significant increase of a nonattainment pollutant. The permitting authority can make these determinations outside of the major NSR process. The 1994 guidance did not void or create an exclusion from any applicable minor source preconstruction review requirements in an approved State Implementation Plan (SIP). Any minor NSR permitting requirements in a SIP would continue to apply, regardless of any exclusion from major NSR that might be approved for a source under the PCP exclusion policy.

In the July 1, 1994 guidance memorandum, the EPA specifically identified the RTO as an example of an add-on control that could be considered a PCP and an appropriate candidate for a case-by-case exclusion from major NSR. For the purposes of today's proposed standards for chemical recovery combustion sources at stand-alone semichemical pulp mills, the EPA considers the application of the RTO to reduce total gaseous organic HAP emissions to be a PCP because the RTO is an add-on control device that would be installed specifically to comply with MACT and will reduce emissions of hazardous organic air pollutants. Furthermore, EPA considers the installation of the RTO to be environmentally beneficial because it would significantly reduce emissions of VOC's and CO as well as the emissions of the targeted pollutants (total gaseous organic HAP's). However, EPA recognizes that incidental formation of NO_X will occur during operation of the RTO. Consistent with the 1994 guidance, the permitting authority should confirm that, in each case, the resultant increase in NO_X emissions would not cause or contribute to a violation of a NAAQS, PSD increment, or adversely affect an AQRV.

The EPA believes that the current guidance on pollution control projects adequately provides for the exclusion from major NSR of air pollution control projects in the pulp and paper industry resulting from today's proposed rule. Such projects would be covered under minor source regulations in the applicable SIP, and permitting authorities would be expected to provide adequate safeguards against NAAQS and increment violations and adverse impacts on AQRV in Federal Class I areas. Only in those areas where potential adverse impacts cannot be resolved through the minor NSR programs or other mechanisms would major NSR apply.

The EPA recognizes that, where there is a potential for an adverse impact, some small percentage of mills located near Class I PSD areas might be subject to major NSR, i.e., the permitting authority determines that the impact or potential impact cannot be adequately addressed by its minor NSR program or other SIP measures. If this occurs, there is a question whether MACT and NSR compliance can both be done within the respective rule deadlines. Although too speculative to warrant disposition in this rule, EPA is alert to this potential problem and will attempt to create implementation flexibility on a case-by-case basis should a problem actually occur.

M. Solicitation of Comments

The EPA seeks full public participation in arriving at its final decisions and encourages comments on all aspects of this proposal from all interested parties. Full supporting data and detailed analyses should be submitted with comments to allow EPA to make maximum use of the comments. All comments should be directed to the Air and Radiation Docket and Information Center, Docket No. A–94–67 (see **ADDRESSES**). Comments on this notice must be submitted on or before the date specified in the **DATES** section.

Commentors wishing to submit proprietary information for consideration should clearly distinguish such information from other comments and clearly label it ''Confidential Business Information'' (CBI). Submissions containing such proprietary information should be sent directly to the Emission Standards Division CBI Office, U.S. Environmental Protection Agency (MD–13), Research Triangle Park, North Carolina 27711, with a copy of the cover letter directed to Mr. Jeff Telander of the Minerals and Inorganic Chemicals Group (see the **FOR FURTHER INFORMATION CONTACT** section for the address). Confidential business information should not be sent to the public docket. Information covered by such a claim of confidentiality will be disclosed by EPA only to the extent allowed and by the procedures set forth in 40 CFR part 2. If no claim of confidentiality accompanies the submission when it is received by EPA, it may be made available to the public without further notice to the commentor.

V. Impacts of Proposed Standards

A. Number of Impacted Sources

An estimated 211 recovery furnaces, 227 SDT's, and 192 lime kilns currently operate at kraft and soda pulp mills in the United States and would be affected by today's proposed standards. The EPA estimates that 52 of the recovery furnaces, 56 of the SDT's, and 77 of the lime kilns would be required to upgrade or replace add-on controls to reduce emissions of PM HAP's under the proposed standards. (These estimates and the impacts estimates in the following sections were determined based on control of PM or PM HAP emissions without using the proposed bubble compliance alternative.)

An estimated 21 sulfite combustion units and 14 semichemical combustion units currently operate in the United States and would be affected by today's proposed standards. Under the proposed standards, an estimated eight sulfite combustion units would be required to upgrade or replace add-on controls to reduce emissions of PM HAP's; an estimated seven semichemical combustion units would be required to add controls to reduce emissions of total gaseous organic HAP's.

B. Environmental Impacts

Nationwide HAP emissions from combustion sources at pulp mills are estimated to be 32,400 Mg/yr (35,700 tons/yr) at the current level of control. The proposed standards are estimated to reduce total HAP emissions by about 2,600 Mg/yr (2,800 tons/yr). In addition to the HAP reductions, the proposed standards would result in the reduction of criteria air pollutants, such as PM and VOC. After implementation of the proposed standards, PM emissions from combustion sources at pulp mills are estimated to decrease by about 23,800 Mg/yr (26,200 tons/yr) from a baseline level of 64,400 Mg/yr (71,000 tons/yr);

VOC emissions from combustion sources at stand-alone semichemical pulp mills are estimated to decrease by about 32,600 Mg/yr (35,900 tons/yr) from a baseline level of 36,600 Mg/yr (40,300 tons/yr); carbon monoxide (CO) emissions from combustion sources at stand-alone semichemical pulp mills are estimated to decrease by about 57,700 Mg/yr (63,600 tons/yr) from a baseline level of 62,800 Mg/yr (69,200 tons/yr); and emissions of nitrogen oxides (NO_x) from combustion sources at stand-alone semichemical pulp mills are estimated to increase by about 476 Mg/yr (525 tons/yr) from a baseline level of 278 Mg/yr (306 tons/yr).

The quantity of PM collected will increase when recovery furnace PM control devices are upgraded or replaced to comply with the proposed standards. However, no increases in solid waste disposal are expected because existing mills have sufficient capacity within the chemical recovery process to recycle the additional PM collected.

If owners or operators choose to replace wet scrubbers with ESP's to comply with the proposed PM HAP standards for lime kilns, the generation of wastewater will be reduced. The significance of the reduction in wastewater will depend on whether the scrubber discharge had previously been recycled and reused. If wet scrubbers are replaced by ESP's (and there was no prior recycle or reuse of scrubber discharge), EPA estimates that wastewater discharge will decrease nationwide by about 36 billion liters per year (L/yr) (9.5 billion gallons per year [gal/yr]) following implementation of the proposed standards.

C. Energy Impacts

The overall energy demand (i.e., electricity plus natural gas) is expected to decrease by about 46.7 million megajoules per year (MJ/yr) (44.3 billion British thermal units per year [Btu/yr]) nationwide under the proposed standards. Electricity requirements are expected to decrease by about 17,200 megawatt-hours per year (MWh/yr) under the proposed standard. This net decrease in electricity requirements includes (1) an expected increase of about 41,400 MWh/yr when PM control devices on kraft and soda recovery furnaces and SDT's and sulfite combustion units are upgraded or replaced, (2) an expected increase of 18,900 MWh/yr when total gaseous organic HAP control devices are added to semichemical combustion units, and (3) an expected decrease of about 77,500 MWh/yr if wet scrubbers are replaced by ESP's to provide increased control of PM emissions from lime kilns. Natural gas requirements are expected to increase by about 0.4 million cubic meters per year (m^3/yr) (14 million cubic feet per year [ft^3/yr]) when total gaseous organic HAP controls are added to semichemical combustion units.

D. Cost Impacts

The estimated capital costs of control for the proposed standards are $258 million. The capital costs of the proposed standards include the costs to purchase and install both the control equipment and monitoring equipment. Most (85 percent) of the capital costs can be attributed to PM controls for kraft and soda combustion sources (recovery furnaces, lime kilns, and SDT's). The kraft and soda PM control costs are estimated based on ESP upgrades for recovery furnaces, replacement of existing wet scrubbers with ESP's for lime kilns, and replacement of existing wet scrubbers with new wet scrubbers for SDT's. The proposed bubble compliance alternative was not considered in estimating the capital PM control costs, and, therefore, the capital costs may be overstated.

The incremental annual costs of the proposed standards are $35.2 million/yr. The annualized costs account for the year-to-year operating expenses associated with the control equipment and the monitoring equipment, in addition to the capital recovery expense associated with the equipment purchases. Most (81 percent) of the annual costs can be attributed to the PM controls for kraft and soda recovery furnaces and SDT's. The annual costs for lime kiln PM controls are cost savings, based on the lower operating costs for ESP's compared to wet scrubbers. The proposed bubble compliance alternative was not considered in estimating the annual PM control costs, and, therefore, the annual costs may be overstated. The total average costs for annual recordkeeping and reporting required by the proposed standards are $6.8 million/yr over the first 3 years after implementation of the standards.

E. Economic Impacts

The economic impacts of today's proposed NESHAP (i.e., MACT II) and the NESHAP for noncombustion sources (i.e., MACT I and II) and effluent limitations guidelines being promulgated today are collectively discussed in section VIII of the integrated preamble for ''NESHAP for Source Category: Pulp and Paper Production; Effluent Limitations Guidelines, Pretreatment Standards, and New Source Performance Standards: Pulp, Paper, and Paperboard Category,'' hereafter referred to as the integrated preamble.

F. Benefits Analysis

Implementation of the proposed regulation is expected to reduce emissions of HAP's, PM, VOC, SO_2, and CO, while it is expected to slightly increase emissions of NO_x. The air quality benefits expected to result from the above emission reductions will be a decrease in adverse health effects associated with inhalation of the above pollutants as well as improved welfare effects, such as improved visibility and crop yields. The benefits analysis is able to quantify and monetize the health and welfare benefits associated with some of these emission reductions. Total monetized benefits of the proposed regulatory alternative for VOC, PM, and SO_2 emission reductions range from approximately $302 million to $384 million. (Refer to the integrated preamble, and the Economic Analysis Document for a detailed description of the methodology used to monetize the benefits.)

Benefit categories that are monetized were compared to annualized control costs of the regulatory alternatives to determine net benefits. In general, the regulatory alternative with the greatest net benefits is optimal from an efficiency standpoint and will be the most beneficial to society. Net benefits of the proposed regulatory alternative ($270 million to $352 million) are greater than the net benefits of all other regulatory alternatives, except those that combine the most stringent control options for kraft and soda mills. However, economic impact and distributional issues must be considered in conjunction with the cost-benefit analysis in the choice of proposed regulatory alternative.

The control costs of the MACT II regulation increase significantly between regulatory options one and four for kraft and soda mills (see section IV.F of this notice). Capital costs increase approximately 850 percent and annualized costs 560 percent when comparing the costs of option one versus four for kraft and soda mills. The estimated increase in the price of unbleached kraft pulp that will result from the MACT II rule differs greatly under the different regulatory options as well. Specifically, prices for unbleached kraft pulp are estimated to increase from 1.4 percent with the least stringent option to 7.4 percent with the more stringent regulatory option for kraft and soda mills.

Based on the economic impact analysis conducted, the increased

emission control costs associated with the most stringent kraft and soda MACT II option are predicted to result in one or more company bankruptcies in the pulp and paper industry. Although the EPA can not determine with certainty the economic costs associated if one or more large firms experience bankruptcy, the EPA has reason to believe that these impacts would likely be significant. Economic impacts and distributional effects associated with bankruptcies may include issues involving changes in the ownership of the firm, loss in investment values for existing investors in the firm, potentially higher financing costs, possible mill closures, and probable job losses. These factors were not directly considered in the cost-benefit analysis conducted for the regulation.

While the cost-benefit analysis seems to indicate that the net benefits of the most stringent regulatory alternative exceed the net benefits of the proposed alternative, the economic impact and distributional effects associated with the most stringent option for kraft and soda mills have not been considered directly in this analysis. These economic impact and distributional issues lead to the conclusion that the regulatory alternatives involving the most stringent option for kraft and soda mills are less than optimal.

VI. Administrative Requirements

A. Docket

The docket is an organized and complete file of all information considered by EPA in developing this proposed rule. The principal purposes of the docket are (1) to allow interested parties to readily identify and locate documents so that they can effectively participate in the rulemaking process, and (2) to serve as the record in case of judicial review. (See section 307(d)(7)(A) of the CAA).

B. Public Hearing

A public hearing will be held, if requested, to discuss the proposed standards in accordance with section 307(d)(5) of the Act. Persons wishing to make oral presentations on the proposed standards should contact the EPA (see **DATES** for contact person and address). If a publice hearing is requested and held, EPA will ask clarifying questions during the oral presentation but will not respond to the presentation of comments. To provide an opportunity for all who wish to speak, oral presentations will be limited to 15 minutes each. Any member of the public may file a written statement on or before [insert date 60 days from FR publication]. Written statements should be addressed to the Air and Radiation Docket and Information Center (see **ADDRESSES**) and refer to Docket No. A–94–67. Written statements and supporting information will be considered with equivalent weight as any oral statement and supporting information subsequently presented at a public hearing, if held. A verbatim transcript of the hearing and written statements will be placed in the docket and will be available for public inspection and copying, or will be mailed upon request, at the Air and Radiation Docket and Information Center (see **ADDRESSES**).

C. Executive Order 12866

Under Executive Order 12866 (58 FR 51736, October 4, 1993), the Agency must determine whether the regulatory action is ''significant'' and, therefore, subject to review by the Office of Management and Budget (OMB) and the requirements of the Executive Order. The Executive Order defines ''significant regulatory action'' as one that is likely to result in a rule that may:

1. Have an annual effect on the economy of $100 million or more or adversely affect in a material way the economy, a sector of the economy, productivity, competition, jobs, the environment, public health or safety, or State, local, or Tribal governments or communities;
2. Create a serious inconsistency or otherwise interfere with an action taken or planned by another agency;
3. Materially alter the budgetary impact of entitlements, grants, user fees, or loan programs or the rights and obligations of recipients thereof; or
4. Raise novel legal or policy issues arising out of legal mandates, the President's priorities, or the principles set forth in the Executive Order.

Pursuant to the terms of Executive Order 12866, OMB has notified EPA that this action is a ''significant regulatory action'' within the meaning of the Executive Order. For that reason, this action was submitted to OMB for review. The regulatory impact assessment (RIA) is detailed in the Economic Analysis Document (docket entry No. II–A–32). Changes made in response to OMB suggestions or recommendations will be documented in the public record.

D. Enhancing the Interdepartmental Partnership Under Executive Order 12875

In compliance with Executive Order 12875, the Agency has involved State regulatory experts in the development of this proposed rule. No Tribal governments are believed to be affected by this proposed rule. State and local governments are not directly impacted by the rule, i.e., they are not required to purchase control systems to meet the requirements of the rule. However, they will be required to implement the rule; e.g., incorporate the rule into permits and enforce the rule. They will collect permit fees that will be used to offset the resources burden of implementing the rule. Comments have been solicited from States and have been carefully considered in the rule development process. In addition, all States are encouraged to comment on this proposed rule during the public comment period, and the EPA intends to fully consider these comments in the development of the final rule.

E. Unfunded Mandates Reform Act

Title II of the Unfunded Mandates Reform Act of 1995 (UMRA), P.L. 104–4, establishes requirements for Federal agencies to assess the effects of their regulatory actions on State, local, and tribal governments and the private sector. Under section 202 of the UMRA, EPA generally must prepare a written statement, including a cost-benefit analysis, for proposed and final rules with ''Federal mandates'' that may result in expenditures to State, local, and tribal governments, in the aggregate, or to the private sector, of $100 million or more in any one year. Before promulgating an EPA rule for which a written statement is needed, section 205 of the UMRA generally requires EPA to identify and consider a reasonable number of regulatory alternatives and adopt the least costly, most cost-effective or least burdensome alternative that achieves the objectives of the rule. The provisions of section 205 do not apply when they are inconsistent with applicable law. Moreover, section 205 allows EPA to adopt an alternative other than the least costly, most cost-effective or least burdensome alternative if the Administrator publishes with the final rule an explanation why that alternative was not adopted. Before EPA establishes any regulatory requirements that may significantly or uniquely affect small governments, including tribal governments, it must have developed under section 203 of the UMRA a small government agency plan. The plan must provide for notifying potentially affected small governments, enabling officials of affected small governments to have meaningful and timely input in the development of EPA regulatory proposals with significant Federal intergovernmental mandates, and informing, educating, and advising

small governments on compliance with the regulatory requirements.

The EPA has determined that this rule contains a Federal mandate that may result in expenditures of $100 million or more for State, local, and Tribal governments, in the aggregate, or the private sector in any one year. Accordingly, EPA has prepared under section 202 of the UMRA a written statement which is summarized below.

1. Statutory Authority

As discussed in section I of this preamble, the statutory authority for this rulemaking is section 112 of the CAA. Title III of the CAA Amendments was enacted to reduce the amount of nationwide air toxic emissions. Section 112(b) lists the 189 chemicals, compounds, or groups of chemicals deemed by Congress to be HAP's. These toxic air pollutants are to be regulated by NESHAP. Hazardous air pollutant emissions from the pulp and paper production source category are being regulated under section 112(d) of the CAA. The NESHAP requires existing and new major sources to control emissions of HAP's using the maximum achievable control technology (MACT).

The pulp and paper production source category includes all mills that produce pulp and/or paper. The NESHAP for the source category are being developed in phases. This proposed NESHAP, referred to as MACT II, regulates chemical recovery combustion sources at kraft, soda, sulfite, and stand-alone semichemical pulp mills. The final NESHAP for noncombustion sources regulates noncombustion processes at mills that (1) chemically pulp wood fiber (using kraft, sulfite, soda, and semi-chemical methods) (MACT I), and (2) mechanically pulp wood fiber (e.g., groundwood, thermomechanical, pressurized), pulp secondary fibers (deinked and nondeinked), and pulp nonwood (MACT III).

Compliance with section 205(a): Regarding the EPA's compliance with section 205(a), the EPA did identify and consider a reasonable number of alternatives; a summary of these alternatives is provided in section IV.F of this preamble. Additional information on the costs and environmental impacts of the regulatory alternatives is presented in the Nationwide Costs, Environmental Impacts, and Cost-Effectiveness of Regulatory Alternatives for Kraft, Soda, Sulfite, and Semichemical Combustion Sources Memo (docket entry No. II–B–63).

The chosen alternative represents the MACT floor for chemical recovery combustion sources at kraft, soda and sulfite pulp mills and is the least costly and least burdensome alternative for those sources. The chosen alternative also includes an option more stringent than the MACT floor for chemical recovery combustion sources at semichemical pulp mills. However, the EPA considers the cost-effectiveness of the more stringent option for semichemical chemical recovery combustion sources (less than $2,800/Mg HAP's, based on conservative cost estimates) acceptable, especially when measured against the environmental benefits of reducing emissions of both HAP's and non-HAP's. Therefore, the EPA concludes that the chosen alternative is the least costly and least burdensome alternative that achieves the objectives of section 112, as called for in section 205(a).

2. Social Costs and Benefits

The regulatory impact analysis prepared for the proposed NESHAP for MACT I, including the Agency's assessment of costs and environmental benefits, is detailed in the ''Regulatory Impact Assessment of Proposed Effluent Guidelines and NESHAP for the Pulp, Paper, and Paperboard Industry,'' (EPA 821–R93–020). The regulatory impact assessment document has been updated for the final rule for MACT I and III and the proposed rule for MACT II and is referred to as the Economic Analysis Document (docket entry No. II–A–32). Social costs and benefits also are discussed in section V of this preamble.

3. Future and Disproportionate Costs

The Unfunded Mandates Act requires that EPA estimate, where accurate estimation is reasonably feasible, future compliance costs imposed by the rule and any disproportionate budgetary effects. The EPA's estimates of the future compliance costs of this rule are discussed in section V.D of this preamble.

The EPA does not believe that there will be any disproportionate budgetary effects of the rule on any particular areas of the country, particular governments or types of communities (e.g., urban, rural), or particular industry segments.

4. Effects on the National Economy

The Unfunded Mandates Act requires that EPA estimate the effect of this rule on the national economy. To the extent feasible, EPA must estimate the effect on productivity, economic growth, full employment, creation of productive jobs, and international competitiveness of the U.S. goods and services, if and to the extent that the EPA in its sole discretion determines that accurate estimates are reasonably feasible and that such effect is relevant and material.

Estimates of the impact of this rule on the national economy are described in section VIII of the integrated preamble to the final rule for MACT I and III and the effluent guidelines that are being promulgated today. The nationwide economic impact of the rule is based on the Economic Analysis Document (docket entry No. II–A–32).

5. Consultation With Government Officials

The Unfunded Mandates Act requires that EPA describe the extent of the agency's prior consultation with affected State, local, and tribal officials, summarize the officials' comments or concerns, and summarize EPA's response to those comments or concerns. In addition, section 203 of the Act requires that EPA develop a plan for informing and advising small governments that may be significantly or uniquely impacted by a proposal. Although this rule does not affect any State, local, or Tribal governments, EPA has consulted with State and local air pollution control officials. The Agency also has held numerous meetings on these proposed integrated rules with many of the stakeholders from the pulp and paper industry, including the American Forest and Paper Association (AF&PA), the National Council of the Paper Industry for Air and Stream Improvement (NCASI), numerous individual companies, environmental groups, consultants and vendors, labor unions, and other interested parties. The EPA has added materials to the Air and Water docket to document these meetings.

F. Regulatory Flexibility

The Regulatory Flexibility Act (RFA) (5 U.S.C. 601 *et seq.*, Pub. L. 96–354), amended by the Small Business Regulatory Enforcement Fairness Act of 1996 (SBREFA), requires the Agency to examine the potential economic impact of regulatory action on small entities. The Agency has recently established guidelines to help analysts comply with RFA requirements, and to determine if a substantial number of small businesses are significantly impacted. The Agency has estimated the economic impact of the integrated regulatory alternative on small companies involved in pulp, paper, and paperboard manufacturing, and these impacts are discussed in the integrated preamble to the final rule for MACT I and III and the effluent limitations guidelines being promulgated today and in the Economic Analysis Document (docket entry No.

II–A–32). As explained there, the CAA rule does not have a significant economic impact on a substantial number of small entities, within the meaning of section 605(b) of the Regulatory Flexibility Act. In making this finding, the Agency explicitly considered the potential impacts of this proposal in combination with both the final CAA rules, and also the final CWA rule. The EPA adopts the same analysis here, and, thus, certifies that this proposed rule does not have a significant impact on a substantial number of small entities.

G. Paperwork Reduction Act

The information collection requirements in this proposed rule have been submitted for approval to OMB under the Paperwork Reduction Act, 44 U.S.C. 3501 *et seq.* An Information Collection Request (ICR) document has been prepared by EPA (ICR No. 1805.01), and a copy may be obtained from Sandy Farmer, OPPE Regulatory Information Division (2136); U.S. Environmental Protection Agency (2136); 401 M Street, SW., Washington, D.C. 20460, or by calling (202) 260–2740. The public reporting and recordkeeping burden for this collection of information is estimated to average 1,350 hours per affected pulp mill annually over the first 3 years after implementation of the standards.

This includes time for reviewing instructions, searching existing data sources, gathering and maintaining the data needed, and completing and reviewing the collection of information.

Send comments regarding the burden estimate or any other aspect of this collection of information, including suggestions for reducing this burden, to Director, OPPE Regulatory Information Division (2137), U.S. Environmental Protection Agency, 401 M Street, SW., Washington, D.C. 20460; and to the Office of Information and Regulatory Affairs, Office of Management and Budget, Washington, D.C. 20503, marked ''Attention: Desk Officer for EPA.'' The final rule will respond to any OMB or public comments on the information collection requirements contained in this proposal.

H. Clean Air Act

In accordance with section 117 of the Act, publication of this proposal was preceded by consultation with appropriate advisory committees, independent experts, and Federal departments and agencies. Pursuant to section 112(f), this regulation will be reviewed 8 years from the date of promulgation. This review will include an assessment of such factors as evaluation of the residual health risks, any overlap with other programs, the existence of alternative methods, enforceability, improvements in emission control technology and health data, and reporting and recordkeeping requirements.

List of Subjects in 40 CFR Part 63

Environmental protection, Air pollution control, Hazardous air pollutants, Pulp and paper mills, Reporting and recordkeeping requirements.

Dated: November 14, 1997.

Carol M. Browner,

Administrator.

For the reasons set out in the preamble, title 40, chapter I, part 63 of the Code of Federal Regulations is proposed to be amended as follows:

PART 63—NATIONAL EMISSION STANDARDS FOR HAZARDOUS AIR POLLUTANTS FOR SOURCE CATEGORIES

1. The authority citation for part 63 continues to read as follows:

Authority: 42 U.S.C. 7401 *et seq.*

2. It is proposed that part 63 be amended by adding subpart MM to read as follows:

Subpart MM—National Emission Standards for Hazardous Air Pollutants; Proposed Standards for Hazardous Air Pollutants From Chemical Recovery Combustion Sources at Kraft, Soda, Sulfite, and Stand-Alone Semichemical Pulp Mills

Sec.

63.860 Applicability and designation of affected source.
63.861 Definitions.
63.862 Standards.
63.863 Compliance dates.
63.864 Monitoring requirements.
63.865 Performance test requirements and test methods.
63.866 Recordkeeping requirements.
63.867 Reporting requirements.
63.868 Delegation of authority.
Table 1 to subpart MM—General Provisions Applicability to Subpart MM

Subpart MM—National Emission Standards for Hazardous Air Pollutants; Proposed Standards for Hazardous Air Pollutants From Chemical Recovery Combustion Sources at Kraft, Soda, Sulfite, and Stand-Alone Semichemical Pulp Mills

§ 63.860 Applicability and designation of affected source.

(a) This subpart applies to the NDCE recovery furnaces, DCE recovery furnace systems, smelt dissolving tanks, and lime kilns at kraft and soda pulp mills; the sulfite combustion units at sulfite pulp mills; and the semichemical combustion units at stand-alone semichemical pulp mills.

(b) *Affected sources.* The affected sources to which the provisions of this subpart apply are:

(1) Each NDCE recovery furnace and associated smelt dissolving tank(s) located at a kraft or soda pulp mill.

(2) Each DCE recovery furnace system and associated smelt dissolving tank(s) located at a kraft or soda pulp mill.

(3) Each lime kiln located at a kraft or soda pulp mill.

(4) Each sulfite combustion unit located at a sulfite pulp mill.

(5) Each semichemical combustion unit located at a stand-alone semichemical pulp mill.

(c) The owner or operator of an affected source subject to the provisions of this subpart must also comply with the requirements of subpart A of this part, according to the applicability of subpart A to such affected sources, as identified in Table 1 of this subpart.

§ 63.861 Definitions.

All terms used in this subpart are defined in the Act, in subpart A of this part, or in this section. For the purposes of this subpart, if the same term is defined in subpart A or any other subpart of this part and in this section, it shall have the meaning given in this section.

Black liquor means spent cooking liquor that has been separated from the pulp produced by the kraft, soda, or semichemical pulping process.

Black liquor oxidation (BLO) system means the vessels used to oxidize the black liquor, with air or oxygen, and the associated storage tank(s).

Black liquor solids (BLS) means the dry weight of the solids in the black liquor that enters the recovery furnace or semichemical combustion unit.

Black liquor solids firing rate means the rate at which black liquor solids are fed to the recovery furnace or the semichemical combustion unit.

Chemical recovery combustion source means any source in the chemical recovery area of a kraft, soda, sulfite or stand-alone semichemical pulp mill that is an NDCE recovery furnace, a DCE recovery furnace system, a smelt dissolving tank (SDT), a lime kiln, a sulfite combustion unit, or a semichemical combustion unit.

Direct contact evaporator (DCE) recovery furnace means a kraft or soda recovery furnace equipped with a direct contact evaporator that concentrates strong black liquor by direct contact between the hot recovery furnace exhaust gases and the strong black liquor.

Direct contact evaporator (DCE) recovery furnace system means a direct

contact evaporator recovery furnace and any black liquor oxidation system, if present, at the pulp mill.

Dry electrostatic precipitator (ESP) system means an electrostatic precipitator with a dry bottom (i.e., no black liquor, water, or other fluid is used in the ESP bottom) and a dry particulate matter (PM) return system (i.e., no black liquor, water, or other fluid is used to transport the collected PM to the mix tank).

Kraft pulp mill means any stationary source that produces pulp from wood by cooking (digesting) wood chips in a solution of sodium hydroxide and sodium sulfide. The recovery process used to regenerate cooking chemicals is also considered part of the kraft pulp mill.

Kraft recovery furnace means a recovery furnace that is used to burn black liquor produced by the kraft pulping process, as well as any recovery furnace that burns black liquor produced from both the kraft and semichemical pulping processes, and includes the direct contact evaporator, if applicable.

Lime kiln means the combustion unit (e.g., rotary lime kiln or fluidized-bed calciner) used at a kraft or soda pulp mill to calcine lime mud, which consists primarily of calcium carbonate, into quicklime, which is CaO.

Lime production rate means the rate at which dry lime, measured as calcium oxide (CaO), is produced in the lime kiln.

Method detection limit means the minimum concentration of an analyte that can be determined with 99 percent confidence that the true value is greater than zero.

Modification means, for the purposes of § 63.862(a)(1)(ii)(E)(1), any physical change (excluding any routine part replacement or maintenance) or operational change (excluding any operational change that occurs during a start-up, shutdown, or malfunction), that is made to the air pollution control device that could result in an increase in PM emissions.

Nondetect data means, for the purposes of this subpart, any value that is below the method detection limit.

Nondirect contact evaporator (NDCE) recovery furnace means a kraft or soda recovery furnace that burns black liquor that has been concentrated by indirect contact with steam.

Particulate matter (PM) means total particulate matter as measured by EPA Method 5, EPA Method 17 (see § 63.865(b)(1)), or EPA Method 29.

PM hazardous air pollutant (HAP) means the sum of all emissions of antimony, arsenic, beryllium, cadmium, chromium, cobalt, lead, manganese, mercury, nickel, and selenium as measured by EPA Method 29 and with treatment of nondetect data as specified in § 63.865(b)(2).

Recovery furnace means an enclosed combustion device where concentrated black liquor produced by the kraft or soda pulping process is burned to recover pulping chemicals and produce steam.

Regenerative thermal oxidizer (RTO) means a thermal oxidizer that transfers heat from the exhaust gas stream to the inlet gas stream by passing the exhaust stream through a bed of ceramic stoneware or other heat-absorbing medium before releasing it to the atmosphere, then reversing the gas flow so the inlet gas stream passes through the heated bed, raising the temperature of the inlet stream close to or at its ignition temperature.

Semichemical combustion unit means any equipment used to combust or pyrolyze black liquor at stand-alone semichemical pulp mills for the purpose of chemical recovery.

Similar process units means all DCE and NDCE recovery furnaces, all smelt dissolving tanks, or all lime kilns at a kraft or soda pulp mill.

Smelt dissolving tank (SDT) means a vessel used for dissolving the smelt collected from a kraft or soda recovery furnace.

Soda pulp mill means any stationary source that produces pulp from wood by cooking (digesting) wood chips in a sodium hydroxide solution. The recovery process used to regenerate cooking chemicals is also considered part of the soda pulp mill.

Soda recovery furnace means a recovery furnace used to burn black liquor produced by the soda pulping process, and includes the direct contact evaporator, if applicable.

Stand-alone semichemical pulp mill means any stationary source that produces pulp from wood by partially digesting wood chips in a chemical solution followed by mechanical defibrating (grinding) and has an onsite chemical recovery process that is not integrated with a kraft pulp mill.

Sulfite combustion unit means a combustion device, such as a recovery furnace or fluidized-bed reactor, where spent liquor from the sulfite pulping process (i.e., red liquor) is burned to recover pulping chemicals.

Sulfite pulp mill means any stationary source that produces pulp from wood by cooking (digesting) wood chips in a solution of sulfurous acid and bisulfite ions. The recovery process used to regenerate cooking chemicals is also considered part of the sulfite pulp mill.

Total hydrocarbons (THC) means the sum of organic compounds measured as carbon using EPA Method 25A.

§ 63.862 Standards.

(a) *Standards for PM HAP: existing sources.* (1) Each owner or operator of an existing kraft or soda pulp mill shall comply with the requirements of either paragraph (a)(1)(i) or paragraph (a)(1)(ii) of this section.

(i) Each owner or operator of a kraft or soda pulp mill shall comply with either the PM or PM HAP emission limits in paragraphs (a)(1)(i) (A) through (C) of this section.

(A) The owner or operator of each existing kraft or soda recovery furnace shall ensure that:

(1) The concentration of PM in the exhaust gases discharged to the atmosphere is less than or equal to 0.10 g/dscm (0.044 gr/dscf) corrected to 8 percent oxygen; or

(2) The PM HAP emissions discharged to the atmosphere are less than or equal to 1.00E–03 kg/Mg (2.01E–03 lb/ton) of black liquor solids fired.

(B) The owner or operator of each existing kraft or soda smelt dissolving tank shall ensure that:

(1) The concentration of PM in the exhaust gases discharged to the atmosphere is less than or equal to 0.10 kg/Mg (0.20 lb/ton) of black liquor solids fired; or

(2) The PM HAP emissions discharged to the atmosphere are less than or equal to 6.20E–05 kg/Mg (1.24E–04 lb/ton) of black liquor solids fired.

(C) The owner or operator of each existing kraft or soda lime kiln shall ensure that:

(1) The concentration of PM in the exhaust gases discharged to the atmosphere is less than or equal to 0.15 g/dscm (0.067 gr/dscf) corrected to 10 percent oxygen; or

(2) The PM HAP emissions discharged to the atmosphere are less than or equal to 6.33E–03 kg/Mg (1.27E–02 lb/ton) of CaO produced.

(ii) As an alternative to meeting the requirements of § 63.862(a)(1)(i), each owner or operator of a kraft or soda pulp mill may establish PM or PM HAP emission limits for each existing kraft or soda recovery furnace, smelt dissolving tank, and lime kiln that operates 6,300 hours per year or more by:

(A) Establishing an overall PM emission limit for all affected existing sources at the kraft or soda pulp mill using the methods in § 63.865(a)(1)(i); or

(B) Establishing an overall PM HAP emission limit for all affected existing sources at the kraft or soda pulp mill using the methods in § 63.865(a)(1)(ii).

(C) The emission limits for each kraft recovery furnace, smelt dissolving tank,

and lime kiln that are used to establish the overall PM limit in paragraph (a)(2)(ii)(A) of this section shall not be less stringent than the emission limitations required by § 60.282 of part 60 for any kraft recovery furnace, smelt dissolving tank, or lime kiln that is subject to the requirements of § 60.282.

(D) Each owner or operator of an existing kraft or soda recovery furnace, smelt dissolving tank, or lime kiln shall ensure that the PM or PM HAP emissions discharged to the atmosphere from each of these sources are less than or equal to the applicable PM or PM HAP limits, established using the methods in § 63.865(a)(1) (i) or (ii), that are used to establish the overall PM or PM HAP limit in paragraphs (a)(2)(ii) (A) or (B) of this section.

(E) Each owner or operator of an existing kraft or soda recovery furnace, smelt dissolving tank or lime kiln must reestablish the emission limits determined in paragraphs (a)(1)(ii) (A) or (B) of this section if either of the following actions are taken:

(1) The air pollution control system for any existing kraft or soda recovery furnace, smelt dissolving tank, or lime kiln for which an emission limit was established in paragraphs (a)(1)(ii) (A) or (B) is modified (as defined in § 63.861) or replaced; or

(2) Any kraft or soda recovery furnace, smelt dissolving tank, or lime kiln for which an emission limit was established in paragraphs (a)(1)(ii) (A) or (B) is shut down for more than 60 consecutive days.

(iii) Each owner or operator of an existing kraft or soda recovery furnace, smelt dissolving tank, or lime kiln that operates less than 6,300 hours per year shall comply with the applicable PM or PM HAP emission limit for that source provided in paragraph (a)(1)(i) of this section.

(2) The owner or operator of each existing sulfite combustion unit shall ensure that the concentration of PM in the exhaust gases discharged to the atmosphere is less than or equal to 0.092 g/dscm (0.040 gr/dscf) corrected to 8 percent oxygen.

(b) *Standards for PM HAP: new sources.* (1) The owner or operator of any new kraft or soda recovery furnace shall ensure that the concentration of PM in the exhaust gases discharged to the atmosphere is less than or equal to 0.034 g/dscm (0.015 gr/dscf) corrected to 8 percent oxygen.

(2) The owner or operator of any new kraft or soda smelt dissolving tank shall ensure that the concentration of PM in the exhaust gases discharged to the atmosphere is less than or equal to 0.06 kg/Mg (0.12 lb/ton) of black liquor solids fired.

(3) The owner or operator of any new kraft or soda lime kiln shall ensure that the concentration of PM in the exhaust gases discharged to the atmosphere is less than or equal to 0.023 g/dscm (0.010 gr/dscf) corrected to 10 percent oxygen.

(4) The owner or operator of any new sulfite combustion unit shall ensure that the concentration of PM in the exhaust gases discharged to the atmosphere is less than or equal to 0.046 g/dscm (0.020 gr/dscf) corrected to 8 percent oxygen.

(c) *Standards for total gaseous organic HAP.* (1) The owner or operator of any new recovery furnace at a kraft or soda pulp mill shall ensure that the concentration of total gaseous organic HAP, as measured by methanol, discharged to the atmosphere is no greater than 0.012 kg/Mg (0.025 lb/ton) of black liquor solids fired.

(2) The owner or operator of each existing or new semichemical combustion unit shall ensure that:

(i) The concentration of total gaseous organic HAP, as measured by total hydrocarbons reported as carbon, discharged to the atmosphere is less than or equal to 1.49 kg/Mg (2.97 lb/ton) of black liquor solids fired; or

(ii) The total gaseous organic HAP emissions, as measured by total hydrocarbons reported as carbon, are reduced by at least 90 percent prior to discharge of the gases to the atmosphere.

§ 63.863 Compliance dates.

(a) The owner or operator of an existing affected source shall comply with the requirements in this subpart no later than [insert date 3 years after the effective date of the final rule].

(b) The owner or operator of a new affected source that has an initial startup date after [insert the effective date of these standards in the final rule] shall comply with the requirements in this subpart immediately upon startup of the affected source, except as specified in § 63.6(b) of subpart A of this part.

§ 63.864 Monitoring requirements.

(a) *General.* (1) The owner or operator of each affected kraft or soda recovery furnace or lime kiln equipped with an ESP shall install, calibrate, maintain, and operate a continuous opacity monitoring system that can be used to determine opacity at least once every successive 10-second period and calculate and record each successive 6-minute average opacity using the procedures in §§ 63.6(h) and 63.8 of subpart A of this part.

(2) The owner or operator of each affected kraft or soda lime kiln, sulfite recovery furnace, or kraft or soda smelt dissolving tank equipped with a wet scrubber shall install, calibrate, maintain, and operate a continuous monitoring system that can be used to determine and record the pressure drop across the scrubber and the scrubbing liquid flowrate at least once every successive 15-minute period using the procedures in § 63.8(c) as well as the following:

(i) The monitoring device used for the continuous measurement of the pressure drop of the gas stream across the scrubber shall be certified by the manufacturer to be accurate to within a gage pressure of ±500 pascals (±2 inches of water gage pressure); and

(ii) The monitoring device used for continuous measurement of the scrubbing liquid flowrate shall be certified by the manufacturer to be accurate within ±5 percent of the design scrubbing liquid flowrate.

(3) The owner or operator of each affected semichemical combustion unit equipped with an RTO shall install, calibrate, maintain, and operate a continuous monitoring system that can be used to determine and record the operating temperature of the RTO at least once every successive 15-minute period using the procedures in § 63.8(c). The monitor shall compute and record the operating temperature at the point of incineration of effluent gases that are emitted using a temperature monitor accurate to within ±1 percent of the temperature being measured.

(4) The owner or operator of each affected source that uses a control device listed in paragraphs (a)(1) through (a)(3) of this section may monitor alternative control device operating parameters subject to prior written approval by the Administrator.

(5) The owner or operator of each affected source that uses an air pollution control system other than those listed in paragraphs (a)(1) through (a)(3) of this section shall monitor the parameters as approved by the Administrator using the methods and procedures in § 63.865(f).

(6) The owner or operator of each affected source complying with the total gaseous organic HAP emission limitations of § 63.862(c)(1) through the use of an NDCE recovery furnace equipped with a dry ESP system is not required to conduct any performance testing or any continuous monitoring to demonstrate compliance with the total gaseous organic HAP emission limitation.

(b) *Initial compliance determination.* (1) The owner or operator of each affected source subject to the requirements of this subpart is required to conduct an initial performance test using the test methods and procedures listed in § 63.7 of subpart A of this part and § 63.865, except as provided in paragraph (b)(3) of this section.

(2) *Determination of operating ranges.* (i) During the initial performance test required in paragraph (b)(1) of this section, the owner or operator of any affected source shall establish operating ranges for the monitoring parameters in paragraphs (a)(2) through (a)(5) of this section, as appropriate; or

(ii) The owner or operator may base operating ranges on values recorded during previous performance tests or conduct additional performance tests for the specific purpose of establishing operating ranges, provided that test data used to establish the operating ranges are or have been obtained using the test methods required in this subpart. The owner or operator of the affected source shall certify that all control techniques and processes have not been modified subsequent to the testing upon which the data used to establish the operating parameter ranges were obtained.

(iii) The owner or operator of an affected source may establish expanded or replacement operating ranges for the monitoring parameter values listed in paragraphs (a)(2) through (a)(5) of this section and established in paragraphs (b)(2) (i) or (ii) of this section during subsequent performance tests using the test methods in § 63.865.

(3) An initial performance test is not required to be conducted in order to determine compliance with the emission limitations of § 63.862(c)(1) if the affected source includes an NDCE recovery furnace equipped with a dry ESP system.

(4) After the Administrator has approved the PM or PM HAP limits for each kraft or soda recovery furnace, smelt dissolving tank, and lime kiln, the owner or operator complying with an overall PM or overall PM HAP emission limit established in § 63.862(a)(1)(ii) shall demonstrate compliance with the PM HAP standard by demonstrating compliance with the approved PM or PM HAP emission limits for each affected kraft or soda recovery furnace, smelt dissolving tank, and lime kiln, using the test methods and procedures in § 63.865(b).

(c) *On-going compliance provisions.* (1) Following the compliance date, owners or operators of all affected sources are required to implement corrective action, as specified in the startup, shutdown, and malfunction plan prepared under § 63.866(a) of this subpart if the following monitoring exceedances occur:

(i) For a new or existing kraft recovery furnace or lime kiln equipped with an ESP, when 10 consecutive 6-minute averages result in a measurement greater than 20 percent opacity;

(ii) For a new or existing smelt dissolving tank, lime kiln, or sulfite combustion unit equipped with a wet scrubber, when any 3-hour average parameter value is outside the range of values established in paragraph (b)(2) of this section.

(iii) For a new or existing semichemical combustion unit equipped with an RTO, when any 1-hour average temperature falls below the temperature established in paragraph (b)(2) of this section;

(iv) For an affected source equipped with an alternative emission control system approved by the Administrator, when any 3-hour average value is outside the range of parameter values established in paragraph (b)(2) of this section; and

(v) For an affected source that is monitoring alternative operating parameters established in paragraph (a)(4) of this section, when any 3-hour average value is outside the range of parameter values established in paragraph (b)(2) of this section.

(2) Following the compliance date, owners or operators of all affected sources are in violation of the standards of § 63.862 if the following monitoring exceedances occur:

(i) For an existing kraft or soda recovery furnace equipped with an ESP, when opacity is greater than 35 percent for 6 percent or more of the time within any 6-month reporting period;

(ii) For a new kraft or soda recovery furnace or a new or existing lime kiln equipped with an ESP, when opacity is greater than 20 percent for 6 percent or more of the time within any 6-month reporting period;

(iii) For a new or existing smelt dissolving tank, lime kiln, or sulfite combustion unit equipped with a wet scrubber, when six or more 3-hour average parameter values within any 6-month reporting period are outside the range of values established in paragraph (b)(2) of this section;

(iv) For a new or existing semichemical combustion unit equipped with an RTO, when any 3-hour average temperature falls below the temperature established in paragraph (b)(2) of this section;

(v) For an affected source equipped with an alternative air pollution control system approved by the Administrator, when six or more 3-hour average values within any 6-month reporting period are outside the range of parameter values established in paragraph (b)(2) of this section; and

(vi) For an affected source that is monitoring alternative operating parameters established in paragraph (a)(4) of this section, when six or more 3-hour average values within any 6-month reporting period are outside the range of parameter values established in paragraph (b)(2) of this section.

(3) For purposes of determining the number of nonopacity monitoring exceedances, no more than one exceedance shall be attributed in any given 24-hour period.

§ 63.865 Performance test requirements and test methods.

(a) The owner or operator of an affected source seeking to comply with a PM or PM HAP emission limit under § 63.862(a)(1)(ii) (A) or (B) shall use the following procedures:

(1) Determine either the overall PM limit or overall PM HAP limit for the mill.

(i) The overall PM limit for the mill shall be determined as follows:

$$EL_{PM} = [(C_{ref,RF})(Q_{RFtot}) + (C_{ref,LK})(Q_{LKtot})](F1)/(BLS_{tot}) + ER1_{ref,SDT} \qquad \text{Eq. (1)}$$

Where:

EL_{PM}=overall PM emission limit for all existing affected sources at the kraft or soda pulp mill, kg/Mg (lb/ton) of black liquor solids fired.

$C_{ref,RF}$=reference concentration of 0.10 g/dscm (0.044 gr/dscf) corrected to 8 percent oxygen for existing kraft or soda recovery furnaces.

Q_{RFtot}=sum of the average gas flow rates measured during the performance test from all existing recovery furnaces at the kraft or soda pulp mill, dry standard cubic meters per minute (dscm/min) (dry standard cubic feet per minute [dscf/min]).

$C_{ref,LK}$=reference concentration of 0.15 g/dscm (0.067 gr/dscf) corrected to 10 percent oxygen for existing kraft or soda lime kilns.

Q_{LKtot}=sum of the average gas flow rates measured during the performance test from all existing lime kilns at the kraft or soda pulp mill, dscm/min (dscf/min).

F1=conversion factor, 1.44 minutes•kilogram/day•gram (min•kg/d•g) (0.206 minutes•pound/day•grain [min•lb/d•r]).

BLS_{tot}=sum of the average black liquor solids firing rates of all existing recovery furnaces at the kraft or soda pulp mill measured during the performance test, megagrams per day (Mg/d) (tons per day [tons/d]) of black liquor solids fired.

$ER1_{ref,SDT}$=reference emission rate of 0.10 kg/Mg (0.20 lb/ton) of black liquor solids fired for existing kraft or soda smelt dissolving tanks; or

(ii) The overall PM HAP limit for the mill shall be determined as follows:

$$EL_{PMHAP} = ER_{ref,RF} + (ER_{ref,LK})\,(CaO_{tot}/BLS_{tot}) + ER2_{ref,SDT} \qquad \text{Eq. (2)}$$

Where:

EL_{PMHAP}=overall PM HAP emission limit for all existing affected sources at the kraft or soda pulp mill, kg/Mg (lb/ton) of black liquor solids fired.

$ER_{ref,RF}$=reference emission rate of 1.00E–03 kg/Mg (2.01E–03 lb/ton) of black liquor solids fired for existing kraft or soda recovery furnaces.

$ER_{ref,LK}$=reference emission rate of 6.33E–03 kg/Mg (1.27E–02 lb/ton) of CaO produced for existing kraft or soda lime kilns.

CaO_{tot}=sum of the average lime production rates for all existing lime kilns at the kraft or soda pulp mill measured as CaO during the performance test, Mg CaO/d (ton CaO/d).

BLS_{tot}=sum of average black liquor solids firing rates of all existing recovery furnaces at the kraft or soda pulp mill measured during the performance test, Mg/d (ton/d) of black liquor solids fired.

$ER2_{ref,SDT}$=reference emission rate of 6.20E–05 kg/Mg (1.24E–04 lb/ton) of black liquor solids fired for existing kraft or soda smelt dissolving tanks.

(2) Establish a preliminary emission limit for each kraft or soda recovery furnace ($C_{EL,RF}$), smelt dissolving tank ($C_{EL,SDT}$), and lime kiln ($C_{EL,LK}$); and, using these emission limits, determine the overall PM or overall PM HAP emission rate for the mill using the procedures in § 63.865(a)(2)(i) through (v), such that the overall PM or overall PM HAP emission rate calculated in § 63.865(a)(2)(v) is less than or equal to the overall PM or overall PM HAP emission limit determined in § 63.865(a)(1), as appropriate.

(i) The following equation shall be used to determine the PM or PM HAP emission rate from each affected recovery furnace:

$$ER_{RF} = (F1)\,(C_{EL,RF})\,(Q_{RF})/(BLS) \qquad \text{Eq. (3)}$$

Where:

ER_{RF}=emission rate from each recovery furnace, kg/Mg (lb/ton) of black liquor solids.

F1=conversion factor, 1.44 min•kg/d•g (0.206 min•lb/d•gr).

$C_{EL,RF}$=preliminary PM or PM HAP emission limit proposed by owner or operator for the recovery furnace, g/dscm (gr/dscf) corrected to 8 percent oxygen.

Q_{RF}=average volumetric gas flow rate from the recovery furnace measured during the performance test, dscm/min (dscf/min).

BLS=average black liquor solids firing rate of the recovery furnace measured during the performance test, Mg/d (ton/d) of black liquor solids.

(ii) The following equation shall be used to determine the PM or PM HAP emission rate from each affected smelt dissolving tank:

$$ER_{SDT} = (F1)\,(C_{EL,SDT})\,(Q_{SDT})/(BLS) \qquad \text{Eq. (4)}$$

Where:

ER_{SDT}=emission rate from each SDT, kg/Mg (lb/ton) of black liquor solids fired.

F1=conversion factor, 1.44 min•kg/d•g (0.206 min•lb/d•gr).

$C_{EL,SDT}$=preliminary PM or PM HAP emission limit proposed by owner or operator for the smelt dissolving tank, g/dscm (gr/dscf) corrected to 8 percent oxygen.

Q_{SDT}=average volumetric gas flow rate from the smelt dissolving tank measured during the performance test, dscm/min (dscf/min).

BLS=average black liquor solids firing rate of the associated recovery furnace measured during the performance test, Mg/d (ton/d) of black liquor solids fired. If more than one SDT is used to dissolve the smelt from a given recovery furnace, then the black liquor solids firing rate of the furnace shall be proportioned according to the size of the SDT's.

(iii) The following equation shall be used to determine the PM or PM HAP emission rate from each affected lime kiln:

$$ER_{LK} = (F1)\,(C_{EL,LK})\,(Q_{LK})\,(CaO_{tot}/BLS_{tot})/(CaO_{LK}) \qquad \text{Eq. (5)}$$

Where:

ER_{LK}=emission rate from each lime kiln, kg/Mg (lb/ton) of black liquor solids.

F1=conversion factor, 1.44 min•kg/d•g (0.206 min•lb/d•gr).

$C_{EL,LK}$=preliminary PM or PM HAP emission limit proposed by owner or operator for the lime kiln, g/dscm (gr/dscf) corrected to 10 percent oxygen.

Q_{LK}=average volumetric gas flow rate from the lime kiln measured during the performance test, dscm/min (dscf/min).

CaO_{LK}=lime production rate of the lime kiln, measured as CaO during the performance test, Mg/d (ton/d) of CaO.

CaO_{tot}=sum of the average lime production rates for all existing lime kilns at the mill measured as CaO during the performance test, Mg/d (ton/d).

BLS_{tot}=sum of the average black liquor solids firing rates of all recovery furnaces at the mill measured during the performance test, Mg/d (ton/d) of black liquor solids.

(iv) If more than one similar process unit is operated at the kraft or soda pulp mill, the following equation shall be used to calculate the overall PM or overall PM HAP emission rate from all similar process units at the mill and shall be used in determining the overall PM or overall PM HAP emission rate for the mill:

$$ER_{PUtot} = ER_{PU1}(PR_{PU1}/PR_{tot}) + \ldots\ldots + (ER_{PUi})(PR_{PUi}/PR_{tot}) \qquad \text{Eq. (6)}$$

Where:

ER_{PUtot}=overall PM or overall PM HAP emission rate from all similar process units, kg/Mg (lb/ton) of black liquor solids fired.

ER_{PU1}=PM or PM HAP emission rate from process unit No. 1, kg/Mg (lb/ton) of black liquor solids fired, calculated using equation (3), (4), or (5) in paragraphs (a)(2)(i) through (a)(2)(iii) of this section.

PR_{PU1}=black liquor solids firing rate in Mg/d (ton/d) for process unit No. 1, if process unit is a recovery furnace or SDT. The CaO production rate in Mg/d (ton/d) for process unit No. 1, if process unit is a lime kiln.

PR_{tot}=total black liquor solids firing rate in Mg/d (ton/d) for all recovery furnaces at the kraft or soda pulp mill if the similar process units are recovery furnaces or SDT's, or the total CaO production rate in Mg/d (ton/d) for all lime kilns at the mill if the similar process units are lime kilns.

ER_{PUi}=PM or PM HAP emission rate from process unit No. i, kg/Mg (lb/ton) of black liquor solids fired.

PR_{PUi}=black liquor solids firing rate in Mg/d (ton/d) for process unit No. i, if process unit is a recovery furnace or SDT. The CaO production rate in Mg/d (ton/d) for process unit No. i, if process unit is a lime kiln.

i=number of similar process units located at the kraft or soda pulp mill.

(v) The following equation shall be used to calculate the overall PM or overall PM HAP emission rate at the mill:

$$ER_{tot} = ER_{RFtot} + ER_{SDTtot} + ER_{LKtot} \qquad \text{Eq. (7)}$$

Where:

ER_{tot}=overall PM or overall PM HAP emission rate for the mill, kg/Mg (lb/ton) of black liquor solids fired.

ER_{RFtot}=PM or PM HAP emission rate from all kraft or soda recovery furnaces, calculated using equation (3) or (6) in paragraphs (a)(2)(i) and (a)(2)(iv) of this section, where applicable, kg/Mg (lb/ton) of black liquor solids fired.

ER_{SDTtot}=PM or PM HAP emission rate from all smelt dissolving tanks, calculated using equation (4) or (6) in paragraphs (a)(2)(ii) and (a)(2)(iv) of this section, where applicable, kg/Mg (lb/ton) of black liquor solids fired.

ER_{LKtot}=PM or PM HAP emission rate from all lime kilns, calculated using equation (5) or (6) in paragraphs (a)(2)(iii) and (a)(2)(iv) of this section, where applicable, kg/Mg (lb/ton) of black liquor solids fired.

(3) For purposes of determining the volumetric gas flow rate used in this section for each kraft or soda recovery furnace, smelt dissolving tank, and lime kiln, Methods 1 through 4 of appendix A, part 60 of this chapter shall be used.

(4) Process data measured during the performance test shall be used to determine the black liquor solids firing rate on a dry basis and the CaO production rate.

(b) The owner or operator seeking to determine compliance with § 63.862(a) shall use the following procedures:

(1) For purposes of determining the concentration of PM emitted from each kraft or soda recovery furnace, sulfite combustion unit, smelt dissolving tank or lime kiln, Method 5 or 29 in appendix A of part 60 of this chapter shall be used, except that Method 17 in appendix A of part 60 may be used in lieu of Method 5 or Method 29 if a constant value of 0.009 g/dscm (0.004 gr/dscf) is added to the results of Method 17, and the stack temperature is no greater than 205°C (400°F). The sampling time and sample volume for each run shall be at least 60 minutes and 0.90 dscm (31.8 dscf). Water shall be used as the cleanup solvent instead of acetone in the sample recovery procedure.

(i) For sources complying with § 63.862(a)(1) or (2), the PM concentration shall be corrected to the appropriate oxygen concentration using the following equation:

$$C_{corr} = C_{meas} \times (21 - X/21 - Y) \qquad \text{Eq. (8)}$$

Where:

C_{corr}=the measured concentration corrected for oxygen, g/dscm (gr/dscf).

C_{meas}=the measured concentration uncorrected for oxygen, g/dscm (gr/dscf).

X=the corrected volumetric oxygen concentration (8 percent for kraft or soda recovery furnaces and sulfite combustion units and 10 percent for lime kilns).

Y=the measured average volumetric oxygen concentration.

(ii) The integrated sampling and analysis procedure of Method 3B shall be used to determine the oxygen concentration. The gas sample shall be taken at the same time and at the same traverse points as the particulate sample.

(2) For purposes of determining the PM HAP emitted from each kraft or soda recovery furnace, smelt dissolving tank, or lime kiln, Method 29 in appendix A of part 60 of this chapter shall be used. Method 101A in appendix B of part 61 may be used as an alternative to Method 29 for determining mercury emissions. When determining the PM HAP emission rate, all nondetect data, as defined in § 63.861, shall be treated as one-half of the method detection limit. The sampling time and sample volume for each run shall be at least 60 minutes and 1.27 dscm (45 dscf).

(i) The following equation shall be used to determine the PM HAP emission rate from each recovery furnace:

$$ER_{RF-PMHAP} = (PMHAP_{meas})/(BLS) \qquad \text{Eq. (9)}$$

Where:

$ER_{RF-PMHAP}$=PM HAP emission rate from each recovery furnace, kg/Mg (lb/ton) of black liquor solids fired.

$PMHAP_{meas}$=measured PM HAP mass emission rate, kg/hr (lb/hr).

BLS=average black liquor solids firing rate, Mg/hr (ton/hr); determined using process data measured during the performance test.

(ii) The following equation shall be used to determine the PM HAP emission rate from each smelt dissolving tank:

$$ER_{SDT-PMHAP} = (PMHAP_{meas})/(BLS) \qquad \text{Eq. (10)}$$

Where:

$ER_{SDT-PMHAP}$=PM HAP emission rate from each smelt dissolving tank, kg/Mg (lb/ton) of black liquor solids fired.

$PMHAP_{meas}$=measured PM HAP mass emission rate, kg/hr (lb/hr).

BLS=average black liquor solids firing rate of the associated recovery furnace, Mg/hr (ton/hr); determined using process data measured during the performance test.

(iii) The following equation shall be used to determine the PM HAP emission rate from each lime kiln:

$$ER_{LK-PMHAP} = (PMHAP_{meas})/(CaO) \qquad \text{Eq. (11)}$$

Where:

$ER_{LK-PMHAP}$=PM HAP emission rate from each lime kiln, kg/Mg (lb/ton) of black liquor solids fired.

$PMHAP_{meas}$=measured PM HAP mass emission rate, kg/hr (lb/hr).

CaO=average lime production rate, Mg/hr (ton/hr); measured as CaO and determined using process data measured during the performance test.

(c) The owner or operator seeking to determine compliance with the total gaseous organic HAP standard in § 63.862(c)(1) without using an NDCE recovery furnace equipped with a dry ESP system shall use Method 308 in appendix A of part 63 of this chapter. The sampling time and sample volume for each run shall be at least 60 minutes and 0.014 dscm (0.50 dscf), respectively.

(1) The following equation shall be used to determine the emission rate from any new NDCE recovery furnace:

$$ER_{NDCE} = (MR_{meas})/(BLS) \qquad \text{Eq. (12)}$$

Where:

ER_{NDCE}=methanol emission rate from the NDCE recovery furnace, kg/Mg (lb/ton) of black liquor solids fired.

MR_{meas}=measured methanol mass emission rate from the NDCE recovery furnace, kg/hr (lb/hr).

BLS=average black liquor solids firing rate of the NDCE recovery furnace, Mg/hr (ton/hr); determined using process data measured during the performance test.

(2) The following equation shall be used to determine the emission rate from any new DCE recovery furnace system:

$$ER_{DCE} = [(MR_{meas,RF})/BLS_{RF}] + [(MR_{meas,BLO})/BLS_{BLO}] \qquad \text{Eq. (13)}$$

Where:

ER_{DCE}=methanol emission rate from each DCE recovery furnace system, kg/Mg (lb/ton) of black liquor solids fired.

$MR_{meas,RF}$=average measured methanol mass emission rate from each DCE recovery furnace, kg/hr (lb/hr).

$MR_{meas,BLO}$=average measured methanol mass emission rate from the black liquor oxidation system, kg/hr (lb/hr).

BLS_{RF}=average black liquor solids firing rate for each DCE recovery furnace, Mg/hr (ton/hr); determined using process data measured during the performance test.

BLS_{BLO}=the average mass rate of black liquor solids treated in the black liquor oxidation system, Mg/hr (ton/hr); determined using process data measured during the performance test.

(d) The owner or operator seeking to determine compliance with the total gaseous organic HAP standards in § 63.862(c)(2), (standards for semichemical combustion units) shall use Method 25A in appendix A of part 60 of this chapter. The sampling time shall be at least 60 minutes.

(1) The following equation shall be used to determine the emission rate from any new or existing semichemical combustion unit:

$$ER_{SCCU} = (THC_{meas})/(BLS) \qquad \text{Eq. (14)}$$

Where:

ER_{SCCU}=THC emission rate from each semichemical combustion unit, kg/Mg (lb/ton) of black liquor solids fired.

THC_{meas}=measured THC mass emission rate, kg/hr (lb/hr).

BLS=average black liquor solids firing rate, Mg/hr (ton/hr); determined using process data measured during the performance test.

(2) If the owner or operator of the semichemical combustion unit has selected the percentage reduction standards for THC, under § 63.862(c)(2)(ii) of this subpart, the percentage reduction in THC emissions ($\%R_{THC}$) is computed using the following formula, provided that E^i and E^o are measured simultaneously:

$$(\%R_{THC}) = \left(\frac{E_i - E_o}{E_i}\right) \times 100 \qquad \text{Eq. (15)}$$

Where:

$\%R_{THC}$=percentage reduction of total hydrocarbons emissions achieved.

E_i=measured THC mass emission rate at the THC control device inlet, kg/hr (lb/hr).

E_o=measured THC mass emission rate at the THC control device outlet, kg/hr (lb/hr).

(e) The owner or operator seeking to comply with the continuous parameter monitoring requirements of § 63.864(b)(2) shall continuously monitor each parameter and determine the arithmetic average value of each parameter during each 3-run performance test. Multiple 3-run performance tests may be conducted to establish a range of parameter values.

(f) The owner or operator of an affected source seeking to demonstrate compliance with the standards in § 63.862 using a control technique other than those listed in § 63.864(a)(1) through (a)(3) shall provide to the Administrator a monitoring plan that includes a description of the control device, test results verifying the performance of the control device, the appropriate operating parameters that will be monitored, and the frequency of measuring and recording to establish continuous compliance with the standards. The monitoring plan is subject to the Administrator's approval. The owner or operator of the affected source shall install, calibrate, operate, and maintain the monitor(s) in accordance with the monitoring plan approved by the Administrator. The owner or operator shall include in the information submitted to the Administrator proposed performance specifications and quality assurance procedures for their monitors. The Administrator may request further information and shall approve acceptable test methods and procedures.

§ 63.866 Recordkeeping requirements.

(a) *Startup, shutdown, and malfunction plan.* The owner or operator shall develop and implement a written plan as described in § 63.6(e)(3) of this part that contains specific procedures to be followed for operating the source and maintaining the source during periods of startup, shutdown, and malfunction and a program of corrective action for malfunctioning process and control systems used to comply with the standard. In addition to the information required in § 63.6(e) of this part, the plan shall include the requirements in paragraphs (a)(1) and (a)(2) of this section.

(1) The startup, shutdown, and malfunction plan shall include procedures for responding to any process parameter level that is inconsistent with the level(s) established under § 63.864(b)(2), including:

(i) Procedures to determine and record the cause of an operating parameter exceedance and the time the exceedance began and ended; and

(ii) Corrective actions to be taken in the event of an operating parameter exceedance, including procedures for recording the actions taken to correct the exceedance.

(2) The startup, shutdown, and malfunction plan also shall include:

(i) A maintenance schedule for each control technique that is consistent with, but not limited to, the manufacturer's instructions and recommendations for routine and long-term maintenance; and

(ii) An inspection schedule for each continuous monitoring system required under § 63.864 to ensure, at least once in each 24-hour period, that each continuous monitoring system is properly functioning.

(b) The owner or operator of an affected source shall maintain records of any occurrence when corrective action is required under § 63.864(c)(1), and when a violation is noted under § 63.864(c)(2).

(c) In addition to the general records required by § 63.10(b)(2) of this part, the owner or operator shall maintain records of the following information:

(1) Records of black liquor solids firing rates in units of megagrams/day or tons/day for all recovery furnaces and semichemical combustion units;

(2) Records of CaO production rates in units of megagrams/day or tons/day for all lime kilns;

(3) Records of parameter monitoring data required under § 63.864, including any period when the operating parameter levels were inconsistent with the levels established during the initial performance test, with a brief explanation of the cause of the deviation and the corrective action taken;

(4) Records and documentation of supporting calculations for compliance determinations made under §§ 63.865 (a) through (e);

(5) Records of monitoring parameter ranges established for each affected source;

(6) Records certifying that an NDCE recovery furnace equipped with a dry ESP system is used to comply with the total gaseous organic HAP standard in § 63.862(c)(1).

§ 63.867 Reporting requirements.

(a) *Notifications.* The owner or operator of any affected source shall submit the applicable notifications from subpart A of this part, as specified in Table 1 of this subpart.

(b) *Additional reporting requirements for PM HAP standards.* (1) Any owner or operator of a group of affected sources at a mill complying with the PM HAP standards in § 63.862(a)(1)(ii) shall submit the PM or PM HAP emission limits determined in § 63.865(a) for each affected kraft or soda recovery furnace, smelt dissolving tank, and lime kiln to the Administrator for approval. The emission limits shall be submitted as part of the notification of compliance status required under subpart A of this part.

(2) Any owner or operator of an affected source complying with the PM or PM HAP standards in § 63.862(a)(1)(ii) shall submit the calculations and supporting documentation used in § 63.865(a) (1) and (2) to the Administrator as part of the notification of compliance status required under subpart A of this part.

(3) After the Administrator has approved the emission limits for any affected source, the owner or operator of an affected source must notify the Administrator before any of the following actions are taken:

(i) The air pollution control system for any affected source is modified or replaced;

(ii) Any kraft or soda recovery furnace, smelt dissolving tank, or lime kiln at a kraft or soda pulp mill complying with the PM or PM HAP standards in § 63.862(a)(1)(ii) is shut down for more than 60 consecutive days;

(iii) A continuous monitoring parameter or the value or range of values of a continuous monitoring parameter for any affected source is changed; or

(iv) The black liquor solids firing rate for any kraft or soda recovery furnace during any 24-hour averaging period is increased by more than 10 percent above the level measured during the most recent performance test.

(4) An owner or operator of a group of affected sources at a mill complying with the PM or PM HAP standards in § 63.862(a)(1)(ii) and seeking to perform the actions in paragraphs (b)(3) (i) or (ii) of this section shall recalculate the overall PM or overall PM HAP emission limit for the group of affected sources and resubmit the documentation required in paragraph (b)(2) of this section to the Administrator. All modified PM and PM HAP emission

limits are subject to approval by the Administrator.

(c) *Excess emissions report.* The owner or operator shall report quarterly if measured parameters meet any of the conditions specified in § 63.864(c) (1) or (2). This report shall contain the information specified in § 63.10(c) of this part as well as the number and duration of occurrences when the source met or exceeded the conditions in § 63.864(c)(1) and the number and duration of occurrences when the source met or exceeded the conditions in § 63.864(c)(2).

(1) When no exceedances of parameters have occurred, the owner or operator shall submit a semiannual report stating that no excess emissions occurred during the reporting period.

(2) The owner or operator of an affected source subject to the requirements of this subpart and subpart S of this part may combine excess emission and/or summary reports for the mill.

§ 63.868 Delegation of authority.

(a) In delegating implementation and enforcement authority to a State under section 112(d) of the Act, the authorities contained in paragraph (b) of this section shall be retained by the Administrator and not transferred to a State.

(b) Authorities which will not be delegated to States: No authorities are retained by the Administrator.

TABLE 1 TO SUBPART MM.—GENERAL PROVISIONS APPLICABILITY TO SUBPART MM

General provisions reference	Summary of requirements	Applies to subpart MM	Comments
63.1(a)(1)	General applicability of the General Provisions	Yes	Additional terms defined in § 63.861; when overlap between subparts A and MM of this part, subpart MM takes precedence.
63.1(a)(2)–(14)		Yes	
63.1(b)(1)	Initial applicability determination	No	Subpart MM specifies the applicability in § 63.860
63.1(b)(2)	Title V operating permit—see part 70	Yes	All major affected sources are required to obtain a title V permit.
63.1(b)(3)	Record of the applicability determination	No	All affected sources are subject to subpart MM according to the applicability definition of subpart MM.
63.1(c)(1)	Applicability of subpart A after a relevant standard has been set.	Yes	Subpart MM clarifies the applicability of each paragraph of subpart A to sources subject to subpart MM.
63.1(c)(2)	Title V permit requirement	Yes	All major affected sources are required to obtain a title V permit. There are no area sources in the pulp and paper mill source category.
63.1(c)(3)	[Reserved]	NA.	
63.1(c)(4)	Requirements for existing source that obtains an extension of compliance.	Yes.	
63.1(c)(5)	Notification requirements for an area source that increases HAP emissions to major source levels.	Yes.	
63.1(d)	[Reserved]	NA.	
63.1(e)	Applicability of permit program before a relevant standard has been set.	Yes.	
63.2	Definitions	Yes	Additional terms defined in § 63.861; when overlap between subparts A and MM of this part occurs, subpart MM takes precedence.
63.3	Units and abbreviations	Yes.	
63.4	Prohibited activities and circumvention	Yes.	
63.5(a)	Construction and reconstruction—applicability	Yes.	
63.5(b)(1)	Upon construction, relevant standards for new sources.	Yes.	
63.5(b)(2)	[Reserved]	NA.	
63.5(b)(3)	New construction/reconstruction	Yes.	
63.5(b)(4)	Construction/reconstruction notification	Yes.	
63.5(b)(5)	Construction/reconstruction compliance	Yes.	
63.5(b)(6)	Equipment addition or process change	Yes.	
63.5(c)	[Reserved]	NA.	
63.5(d)	Application for approval of construction/reconstruction.	Yes.	
63.5(e)	Construction/reconstruction approval	Yes.	
63.5(f)	Construction/reconstruction approval based on prior State preconstruction review.	Yes.	
63.6(a)(1)	Compliance with standards and maintenance requirements—applicability.	Yes.	
63.6(a)(2)	Requirements for area source that increases emissions to become major.	Yes.	
63.6(b)	Compliance dates for new and reconstructed sources.	Yes.	
63.6(c)	Compliance dates for existing sources	Yes	Subpart MM specifically stipulates the compliance schedule for existing sources.
63.6(d)	[Reserved]	NA.	
63.6(e)	Operation and maintenance requirements	Yes.	
63.6(f)	Compliance with nonopacity emission standards	Yes.	

TABLE 1 TO SUBPART MM.—GENERAL PROVISIONS APPLICABILITY TO SUBPART MM—Continued

General provisions reference	Summary of requirements	Applies to subpart MM	Comments
63.6(g)	Compliance with alternative nonopacity emission standards.	Yes.	
63.6(h)	Compliance with opacity and visible emission (V.E.) standards.	Yes	Subpart MM does not contain any opacity or V.E. standards; however, § 63.864 specifies opacity monitoring requirements.
63.6(i)	Extension of compliance with emission standards	Yes.	
63.6(j)	Exemption from compliance with emission standards.	Yes.	
63.7(a)(1)	Performance testing requirements—applicability	Yes.	§ 63.864(a)(6) specifies the only exemption from performance testing allowed under subpart MM.
63.7(a)(2)	Performance test dates	Yes.	
63.7(a)(3)	Performance test requests by Administrator under section 114.	Yes.	
63.7(b)(1)	Notification of performance test	Yes.	
63.7(b)(2)	Notification of delay in conducting a scheduled performance test.	Yes.	
63.7(c)	Quality assurance program	Yes.	
63.7(d)	Performance testing facilities	Yes.	
63.7(e)	Conduct of performance tests	Yes.	
63.7(f)	Use of an alternative test method	Yes.	
63.7(g)	Data analysis, recordkeeping, and reporting	Yes.	
63.7(h)	Waiver of performance tests	Yes	§ 63.864(a)(6) specifies the only exemption from performance testing allowed under subpart MM.
63.8(a)	Monitoring requirements—applicability	Yes	See § 63.864.
63.8(b)	Conduct of monitoring	Yes.	
63.8(c)	Operation and maintenance of CMS	Yes.	
63.8(d)	Quality control program	Yes.	
63.8(e)(1)	Performance evaluation of CMS	Yes.	
63.8(e)(2)	Notification of performance evaluation	Yes.	
63.8(e)(3)	Submission of site-specific performance evaluation test plan.	Yes.	
63.8(e)(4)	Conduct of performance evaluation and performance evaluation dates.	Yes.	
63.8(e)(5)	Reporting performance evaluation results	Yes.	
63.8(f)	Use of an alternative monitoring method	Yes.	
63.8(g)	Reduction of monitoring data	Yes.	
63.9(a)	Notification requirements—applicability and general information.	Yes.	
63.9(b)	Initial notifications	Yes.	
63.9(c)	Request for extension of compliance	Yes.	
63.9(d)	Notification that source subject to special compliance requirements.	Yes.	
63.9(e)	Notification of performance test	Yes.	
63.9(f)	Notification of opacity and V.E. observations	Yes	Subpart MM does not contain any opacity or V.E standards; however, § 63.864 specifies opacity monitoring requirements.
63.9(g)(1)	Additional notification requirements for sources with CMS.	Yes.	
63.9(g)(2)	Notification of compliance with opacity emission standard.	Yes	Subpart MM does not contain any opacity or V.E. emission standards; however, § 63.864 specifies opacity monitoring requirements.
63.9(g)(3)	Notification that criterion to continue use of alternative to relative accuracy testing has been exceeded.	Yes.	
63.9(h)	Notification of compliance status	Yes.	
63.9(i)	Adjustment to time periods or postmark deadlines for submittal and review of required communications.	Yes.	
63.9(j)	Change in information already provided	Yes.	
63.10(a)	Recordkeeping requirements—applicability and general information.	Yes	See § 63.866.
63.10(b)(1)	Records retention	Yes.	
63.10(b)(2)	Information and documentation to support notifications and demonstrate compliance.	Yes.	
63.10(b)(3)	Records retention for sources not subject to relevant standard.	Yes	Applicability requirements are given in § 63.860.
63.10(c)	Additional recordkeeping requirements for sources with CMS.	Yes.	
63.10(d)(1)	General reporting requirements	Yes.	

TABLE 1 TO SUBPART MM.—GENERAL PROVISIONS APPLICABILITY TO SUBPART MM—Continued

General provisions reference	Summary of requirements	Applies to subpart MM	Comments
63.10(d)(2)	Reporting results of performance tests	Yes.	
63.10(d)(3)	Reporting results of opacity or V.E. observations	Yes	Subpart MM does not include any opacity or visible emission standards; however, § 63.864 specifies opacity monitoring requirements.
63.10(d)(4)	Progress reports	Yes.	
63.10(d)(5)	Periodic and immediate startup, shutdown, and malfunction reports.	Yes.	
63.10(e)	Additional reporting requirements for sources with CMS.	Yes.	
63.10(f)	Waiver of recordkeeping and reporting requirements.	Yes.	
63.11	Control device requirements for flares	No	The use of flares to meet the standards in subpart MM is not anticipated.
63.12	State authority and delegations	Yes.	
63.13	Addresses of State air pollution control agencies and EPA Regional Offices.	Yes.	
63.14	Incorporations by reference	Yes.	
63.15	Availability of information and confidentiality	Yes.	

[FR Doc. 98–9614 Filed 4–14–98; 8:45 am]

BILLING CODE 6560–50–P

federal register

Wednesday
April 15, 1998

Part IV

Environmental Protection Agency

40 CFR Part 430

Amendments to the Effluent Limitations Guidelines, Pretreatment Standards, and New Source Performance Standards for the Bleached Papergrade Kraft and Soda Subcategory of the Pulp, Paper, and Paperboard Point Source Category; Proposed Rule

ENVIRONMENTAL PROTECTION AGENCY

40 CFR Part 430

[FRL–5924–9; 2040–AD05]

RIN 2040–AD05

Amendments to the Effluent Limitations Guidelines, Pretreatment Standards, and New Source Performance Standards for the Bleached Papergrade Kraft and Soda Subcategory of the Pulp, Paper, and Paperboard Point Source Category

AGENCY: Environmental Protection Agency (EPA).

ACTION: Proposed rule.

SUMMARY: Today EPA is proposing two amendments to 40 CFR Part 430, the Pulp, Paper and Paperboard Point Source Category. The first affects only existing direct discharging mills in Subpart B (Bleached Papergrade Kraft and Soda Subcategory) that choose to enroll in the Voluntary Advanced Technology Incentives Program being promulgated in the final Pulp and Paper ''Cluster Rules,'' found elsewhere in today's **Federal Register**. Today's proposal would require such mills to submit a plan (referred to as the ''Milestones Plan'') specifying research, construction, and other activities leading to achievement of the Voluntary Advanced Technology BAT effluent limitations in § 430.24(b) of the final ''Cluster Rules,'' with accompanying dates for achieving these milestones. The purpose of the plan would be to provide the permitting authority with mill-specific information upon which to base permit requirements reflecting reasonable interim milestones as required by § 430.24(b)(2).

The second amendment proposed today would authorize mills in Subpart B to demonstrate compliance with applicable chloroform limitations and standards, (also being promulgated today in the ''Cluster Rules'') in lieu of monitoring at a fiber line, by certifying that the fiber line is not using elemental chlorine or hypochlorite as bleaching agents and that they also maintain certain operational conditions specified in the proposed regulation. This second amendment would reduce the reporting burden for those mills that choose to certify.

In addition, although EPA is not proposing totally chlorine-free (TCF) technologies and associated process wastewater flow reduction technologies as the basis for new source performance standards or pretreatment standards for new sources for mills in Subpart B at this time, EPA today is requesting comments and data on the feasibility of TCF processes for this subcategory, especially the range of products made and their specifications. EPA is also requesting comments and data regarding effluent reduction performance of TCF processes for this subcategory.

DATES: Comments on the proposed rule, as well as information and data regarding the feasibility of TCF bleaching processes for new sources in the Bleached Papergrade Kraft and Soda Subcategory, must be received by June 15, 1998.

ADDRESSES: Send comments on this proposal, as well as information and data regarding TCF processes, in triplicate to Mr. J. Troy Swackhammer, Office of Water, Engineering and Analysis Division (4303), U.S. Environmental Protection Agency, 401 M Street, SW, Washington DC 20460. In addition to submitting hard copies of the comments, the public may also send comments via e-mail to:swackhammer.j-troy@epamail.epa.gov. The public record (excluding confidential business information) for this rulemaking is available for review at the EPA's Water Docket, 401 M Street, SW, Washington DC. For access to docket materials, call (202) 260–3027 between 9:00 a.m. and 3:30 p.m. for an appointment. The EPA public information regulation (40 CFR Part 2) provides that a reasonable fee may be charged for copying.

FOR FURTHER INFORMATION CONTACT: Mr. J. Troy Swackhammer at (202) 260–7128.

SUPPLEMENTARY INFORMATION:

Regulated entities. Entities potentially regulated by this action are those operations that chemically pulp wood fiber using kraft or soda methods to produce bleached papergrade pulp and/or bleached paper/paperboard. Regulated categories and entities include:

Category	Applicable proposed amendment	Examples of regulated entities
Industry—Bleached Papergrade Kraft and Soda Subcategory.	• Submittal of Milestones Plan	• Pulp and paper mills that choose to enroll in the Voluntary Advanced Technology Incentives Program.
	• Certification in place of chloroform monitoring.	• Pulp and Paper Mills that choose to certify to the use of Elemental Chlorine-Free processes and certain other processes and operational controls in lieu of monitoring for chloroform.

This table is not intended to be exhaustive, but rather provides a guide for readers regarding entities likely to be regulated by this action. This table lists the types of entities that EPA is now aware could potentially be regulated by this action. Other types of entities not listed in the table could also be regulated. To determine whether your facility is regulated by this action, you should carefully examine the applicability criteria in § 430.20 of the final Pulp and Paper ''Cluster Rules'' found elsewhere in today's **Federal Register**. If you have questions regarding the applicability of this action to a particular entity, consult the person listed in the preceding **FOR FURTHER INFORMATION CONTACT** section.

Overview

This preamble describes the legal authority of this proposed rule, background information to the development of the proposed amendments, and the rationale for the proposed Milestones Plan and the proposed chloroform certification provisions. This preamble also solicits comments and data regarding the proposed amendments, as well as information and data regarding the feasibility of Totally Chlorine-Free bleaching processes as a basis for new source performance standards (NSPS) or pretreatment standards for new sources (PSNS) for mills in Subpart B (Bleached Papergrade Kraft and Soda Subcategory).

Organization of this Preamble

I. Legal Authority
II. Background
  A. Voluntary Advanced Technology Incentives Program
  B. Demonstrating Compliance With Chloroform Limitations

C. Availability of Totally Chlorine-Free Technologies
III. The Milestones Plan
A. Rational for Submittal of the Plan
B. Scope of the Milestone Plan
C. Permit Writers' Responsibilities
D. Estimates of Burden for Milestones Plan
IV. Certification in Lieu of Monitoring for Chloroform
V. Solicitation of Data and Commenters
VI. Administrative Requirements
A. Executive Order 12866
B. Regulatory Flexibility Act and the Small Business Regulatory Enforcement Fairness Act of 1996
C. Paperwork Reduction Act
D. Unfunded Mandates Reform Act (UMRA)
E. Executive Order 12875
F. Executive Order 12898
G. National Technology Transfer and Advancement Act

I. Legal Authority

This proposed regulation would establish requirements for submitting a ''Milestones Plan'' by mills that choose to enroll in the Voluntary Advanced Technology Incentives Program and would reduce the monitoring burden on mills that certify that they use elemental chlorine-free processes and other operational controls. These amendments to 40 CFR Part 430 are proposed under the authorities of Sections 301, 304, 306, 307, 308, 402, and 501 of the Clean Water Act, 33 U.S.C. 1311, 1314, 1316, 1317, 1318, 1342, and 1361, as amended.

II. Background

A. Voluntary Advanced Technology Incentives Program

EPA is establishing a Voluntary Advanced Technology Incentives Program for Subpart B to encourage direct discharging mills to move beyond today's baseline BAT and NSPS technologies toward the ''mill of the future,'' which EPA believes will have a minimum impact on the environment. See 40 CFR 430.24(b) and 430.25(c). Mills that enroll in the incentives program (hereafter AT mills) can choose between two or three different levels of ultimate performance requirements (i.e., existing mills can choose Tier I, Tier II, or Tier III; new source mills can choose Tier II or Tier III). In any tier, existing AT mills must meet ''stage 1'' limitations, interim milestones, and ''stage 2'' limitations (i.e., the ultimate performance requirements for the particular tier). New source AT mills must meet the ultimate Tier performance requirements upon commencement of discharge. For further details on this voluntary program, see Section IX of the preamble for the promulgated ''Cluster Rules'' for the pulp and paper industry published elsewhere in today's **Federal Register**.

In order to facilitate achievement of the ultimate BAT limitations required by this program, EPA is proposing today to require all existing mills enrolled in the voluntary incentives program to submit plans (referred to as ''Milestones Plans'') detailing the strategy the mill will follow to develop and implement the technologies or processes it intends to use to achieve the Voluntary Advanced Technology BAT limitations associated with the chosen incentive tier.

B. Demonstrating Compliance With Chloroform Limitations

In response to comments, EPA considered in connection with the final Cluster Rules whether certification of Elemental Chlorine-Free (ECF) bleaching processes can be used in lieu of monitoring as a basis for compliance with the regulations published elsewhere in the **Federal Register** today. EPA determined that the information available at this time does not demonstrate that ECF certification alone is sufficient to ensure compliance with the regulations promulgated today. Therefore, the effluent limitations guidelines promulgated today do not allow certification of ECF bleaching to replace monitoring for any regulated pollutant. However, EPA is proposing here to allow mills in Subpart B that demonstrate compliance with the applicable chloroform limitations or standards through required monitoring over a two-year period to demonstrate continuing compliance with chloroform limitations and standards by certifying that they use ECF bleaching processes and also maintain process and operation conditions in use during the initial two-year monitoring period. See Section IV. EPA is requesting data to further inform its final decision in this matter. See Section V.

C. Availability of Totally Chlorine-Free Technologies

With respect to Totally Chlorine-Free (TCF) bleaching processes, several non-U.S. mills have reported the production of TCF softwood kraft pulp at full market brightness. However, EPA's data are not sufficient to confirm that TCF bleaching processes are technically demonstrated for the full range of market products currently served by the bleached kraft process. EPA is also unable, based on the information available today, to define a segment of the Bleached Papergrade Kraft and Soda subcategory for which TCF bleaching processes and, if appropriate, flow reduction technologies similar to those incorporated in the Voluntary Advanced Technology Incentives program, are known to be technically feasible and thus could be the basis for NSPS or PSNS. EPA believes that progress being made in developing TCF bleaching processes and process wastewater flow reduction technologies is substantial, and that additional data may demonstrate that TCF processes and flow reduction technologies are indeed available for the full range, or a substantial portion, of market products. To this end, EPA is soliciting additional data and comment on the full range of market specifications currently being achieved for TCF kraft pulp (e.g., brightness, strength, and cleanliness). EPA also will further evaluate whether the performance of TCF and associated process wastewater flow reduction technologies would be superior environmentally to the performance of the technology basis of the new NSPS/PSNS standards for Subpart B mills published elsewhere in today's **Federal Register**. Depending on these findings, EPA will determine whether to propose revisions to NSPS/PSNS based upon TCF for Subpart B mills.

III. The Milestones Plan

A. Rationale for Submittal of the Plan

EPA has determined that the Milestones Plan described in today's proposed amendment to 40 CFR 430.24 will provide information necessary for the development of interim limitations or permit conditions under 40 CFR 430.24(b)(2) that lead to achievement of the Voluntary Advanced Technology BAT limitations codified at 40 CFR 430.24(b) (3) and (4). See CWA section 308(a). Once incorporated into NPDES permits, these milestones will be enforceable and will provide valuable benchmarks for reasonable inquiries into progress being made by participating mills toward achievement of the interim and ultimate Tier limits. EPA believes that requiring each mill enrolled in the Voluntary Advanced Technology Incentives Program to submit an individualized Milestones Plan to its permitting authority will provide the necessary flexibility to the mill and the permit writer so that the milestones selected to be incorporated into the mill's NPDES permit reflect the unique situation at that mill. These interim milestones will represent reasonable further progress toward the achievement of the six-year milestone limits for Tiers II and III and the ultimate Advanced Technology BAT limitations for all Tiers. As developed by each individual mill, these milestones should reflect the planning process under which the mill

determined the ultimate Tier limits to be economically achievable.

B. Scope of the Milestones Plan

As proposed today, the Milestones Plan would describe each envisioned new technology component or process modification the mill intends to implement in order to achieve the Voluntary Advanced Technology BAT limits. In addition, the mill would be required to include a master schedule in the plan showing the sequence of implementing the new technologies and process modifications and identifying critical-path relationships within the sequence. For each individual technology or process modification, the Milestones Plan would need to include: (1) A schedule that lists the anticipated dates that associated construction, installation, and/or process changes will be initiated; (2) the anticipated date that those steps will be completed; (3) the anticipated date that the Advanced Technology process or individual component will be fully operational; (4) and the anticipated reductions in effluent quantity and improvements in effluent quality as measured at the bleach plant (for bleach plant, pulping area and evaporator condensates flow and BAT parameters other than Adsorbable Organic Halides (AOX)) and at the end of the pipe (for AOX). For those technologies or process modifications that are not commercially available or demonstrated on a full-scale basis at the time the plan is developed, the plan would be required to include a schedule for research (if necessary), process development, and mill trials. The schedule for research, process development, and mill trials would need to show major milestone dates and the anticipated date the technology or process change will be available for mill implementation. The plan also would need to include contingency plans in the event that any of the technologies or processes specified in the Milestones Plan need to be adjusted or alternative approaches developed to ensure that the ultimate tier limits are achieved by the dates outlined in the master schedule. EPA is proposing new regulatory language describing the Milestones Plan in § 430.24(c).

C. Permit Writers' Responsibilities

EPA expects the permitting authority to use the information contained in those plans, as well as its own best professional judgment, to establish enforceable interim milestones applying all statutory factors. EPA also expects permit writers to include reopener clauses in the permits to adjust these interim milestones as necessary to reflect the results of research, process development, mill trials, and contingencies as appropriate.

D. Estimates of Burden for Milestones Plan

EPA has estimated the reporting burden associated with the required Milestones Plan, and is developing a draft Information Collection Request (ICR) under the Paperwork Reduction Act, described in Section VI.C. These estimates reflect the burden of preparing the Milestones Plan, and are based on the assumption that plans will follow the outline given as an example in the ''Voluntary Advanced Technology Incentives Program Technical Support Document'' (DCN 14488). The labor hour and cost estimates are based on the anticipated level of complexity of the Tier plans, and reflect greater complexity at higher Tiers. It should be noted that the burden estimates include preparation and submittal of the Milestones Plan and for Tiers II and III plan development, a budget to perform scoping studies to determine implementability at the mills.

EPA estimated 56 hours for the preparation and submittal of the Milestones Plan for mills enrolling in Tier I of the Voluntary Advanced Technology Incentives Program. This assumes the mill will implement readily-available technology and will not perform research and development activities. EPA estimates that 14 mills will enroll at the Tier I level.

EPA estimates 154 hours for the preparation and submittal of the Milestones Plan for mills enrolling in Tier II of the Voluntary Advanced Technology Incentives Program in addition to an estimate of approximately $14,000 for each scoping study, which may be performed by a consultant. This assumes the mill, upon implementing the Milestones Plan, will conduct one research and development project related to condensate reuse, but otherwise will implement readily-available technology. The cost of the research and development project, which is estimated as part of EPA's estimates for compliance with the Voluntary Advanced Technology Incentives Program, is not included in this burden estimate. EPA estimates that 13 mills will enroll at the Tier II level.

EPA estimates 328 hours for the preparation and submittal of the Milestones Plan for mills enrolling in Tier III of the Voluntary Advanced Technology Incentives Program in addition to an estimate of approximately $26,000 for each scoping study, which may be performed by a consultant. This assumes the mill upon implementing the Milestone Plan, will conduct six research and development projects designed to upgrade condensate quality from evaporators, to improve treatment of condensates, to provide advanced process control, to optimize water balance strategies to nearly closed loop processing, and to remove minerals and/or chloride. The cost of the research and development projects, which are estimated as part of EPA's estimates for compliance with the Voluntary Advanced Technology Incentives Program, are not included in this burden estimate. EPA estimates that 2 mills will enroll at the Tier III level.

The following chart reflects the underlying basis for the hour estimates:

	Tier I		Tier II		Tier III	
	Engineer hours	Management hours	Engineer hours	Management hours	Engineer hours	Management hours
Overview of Technical Strategy	12	4	20	8	24	8
Description of Technology Elements	10	2	20	4	32	8
Master Schedule	20	4	46	8	64	16
Research and Development Schedule	0	0	24	8	112	40
Appendix of Supporting Documentation[1]	4	0	16	0	24	0
Total Hours	56		154		328	

[1] Includes vendor documentation or preliminary studies at all Tier levels, feasibility studies, research proposals and reports, and literature on minimum effluent technology at Tier II and III levels, and literature on closed cycle technology for Tier III.

Assuming a salary rate (inclusive of benefits) of $65 per hour for process engineering time and $100 per hour for senior management time, the costs for preparing milestone plans are estimated at $246,400 as a one-time cost for mills anticipated to enroll in the program. The total cost of the milestones plan preparation inclusive of estimates for scoping studies is approximately $481,000.

IV. Certification in Lieu of Monitoring for Chloroform

Commenters to EPA's July 15, 1996 Notice of Availability on the pulp and paper effluent limitations guidelines and standards, 61 FR 36835, suggested that EPA consider allowing certification of process changes (specifically elimination of elemental chlorine and hypochlorite, but no other process factors) in lieu of monitoring to demonstrate compliance with the chloroform limitations and standards EPA had proposed. EPA did not include a certification option in the final Cluster Rules because the information available at this time does not demonstrate that ECF certification alone is sufficient to ensure compliance with the regulations published elsewhere in today's **Federal Register**. EPA based this conclusion on its finding that pulping and bleaching processes and related factors also have an effect on the rates of generation of chlorinated pollutants as measured in mill wastewaters. See DCN 14497, Vol. 1.

Nevertheless, EPA believes that it may be appropriate to allow mills to demonstrate compliance with chloroform limitations and standards promulgated today through a certification that accounts for those process and operating conditions. EPA has reason to believe that these conditions are relevant to compliance with the promulgated chloroform limitations and standards. Among the process and related factors that EPA believes may influence compliance are: residual lignin content of unbleached pulp (kappa number); the bleaching chemicals used (e.g., chlorine dioxide, or chlorine monoxide assuming elemental chlorine and hypchlorite have been eliminated); and, their application rates, kappa factor, and other physical factors (e.g., mixing with other wastewaters with differing properties prior to monitoring point, etc.) plus the types of bleach plant washers used (e.g., high air flow drum washers, low air flow washers, etc.).

Therefore, EPA is proposing new regulatory language in 40 CFR 430.02(f) that would allow Subpart B mills to certify in lieu of the requirement to monitor for chloroform at a fiber line to which the limitations or standards apply, if: (1) The discharger demonstrates, based on two years of monitoring conducted in accordance with the minimum monitoring requirements of the final regulation, that it is achieving the applicable limitations or standards for chloroform; (2) the discharger certifies at that time and annually thereafter to the permitting or pretreatment control authority that the fiber line does not use elemental chlorine or hypochlorite as bleaching agents and that it is maintaining certain other process and operating conditions in use at the fiber line during the initial compliance demonstration period; and, (3) the discharger maintains records of the process and operating conditions for the fiber line. These process and operating conditions include, for example, maintaining a kappa factor and/or chemical application rate that does not exceed that for which compliance has been demonstrated at that fiber line, achieving a pre-bleaching kappa number that does not exceed that for which compliance has been demonstrated, and using precursor-free raw material. Examples of additional operational factors that may be required as part of the certification are the mixing (or separation) of acid and alkaline filtrates prior to the monitoring point and other physical factors such as types of bleach plant washers (e.g., high air flow drum washers, low air flow washers, etc.).

EPA is proposing that the certification be made annually, rather than once every permit cycle, because the certification includes operational factors in addition to chemical use or substitution. These factors require greater oversight and control on the part of the mill than can be achieved by monitoring mill chemical purchases.

EPA believes that additional data will allow it to further document and confirm the specific process and operating conditions that are necessary to provide an adequate basis for establishing compliance with the promulgated chloroform limitations and standards. EPA believes that if additional data becomes available that further document and confirm pertinent process and operating conditions, then it would be appropriate to provide flexibility to allow ECF mills to certify that they consistently maintain these process changes and operating conditions subsequent to the two-year period of monitoring for compliance demonstration. Thus, additional data will be critical to EPA's final decision on the certification being proposed today for Subpart B mills.

The certification alternative for chloroform being proposed today is not limited to the timeframes during which monitoring is required at the minimum monitoring frequencies specified in 40 CFR 430.02(b) and (c), but may apply as an alternative to monitoring that would be otherwise be required by a permit writer or pretreatment control authority in accordance with 40 CFR 122.44(i) or 40 CFR Part 403, as applicable.

EPA anticipates that the cost of certifying, when compared to the cost of monitoring, would be negative. EPA also recognizes that certification is voluntary and is not being required of mills that prefer to monitor. EPA has therefore not included costs of certification in the overall cost estimates of this proposal.

V. Solicitation of Data and Comments

EPA is seeking comment on today's proposed amendments to Part 430, which would require submission of a plan for achieving the Voluntary Advanced Technology BAT limits codified in Subpart B. Specifically, EPA solicits comment on the overall scope of the plan and the suggested content, including the effectiveness of the milestones required, critical-path schedule, contingency alternatives, and identification of major milestones, in the form of numeric or narrative limitations and/or conditions, that could or should be incorporated in an NPDES permit. EPA also solicits comment on the reasonableness of the response burden that such a plan would impose. (See Sections III.D and VI.C of today's proposal for discussions of the burden estimated to be associated with the Milestones Plan).

EPA is also seeking additional bleach plant chloroform data from Subpart B ECF mills, along with corresponding process and operating information and data, to determine whether an ECF certification process for chloroform should also require certification that relevant process and operating factors are consistently maintained. Currently available data and any new data that are received will be used by EPA as a basis for its final decision on whether to promulgate the certification being proposed today and the extent to which process and related factors are incorporated.

EPA also is soliciting comment and data on TCF processes and associated process wastewater flow reduction technologies that may serve as the technology basis for NSPS/PSNS for Subpart B mills. EPA specifically solicits data on the range of market pulp and paper products that are commercially manufactured by TCF

processes in the U.S., Canada, Europe, and elsewhere. EPA also solicits and will seek to gather additional performance data for full scale TCF mills that could serve as the basis for NSPS/PSNS that may be proposed at a later date.

Interested parties wishing to gather and submit data at ECF mills for chloroform generation and related process variables, and for the performance and products of TCF processes and flow reduction technologies, are strongly encouraged to contact EPA to ensure that the data gathering to be undertaken will be of adequate scope, will utilize appropriate analytical methods where necessary, and will include sufficient documentation to be useful. (Consult the person listed in the **FOR FURTHER INFORMATION CONTACT** section of this proposal.)

Finally, EPA is soliciting comment on the estimated burden associated with preparing the Milestones Plan (see Sections III.D and VI.C of today's notice for detailed discussions of the estimated burden).

VI. Administrative Requirements

A. Executive Order 12866

Under Executive Order 12866, 58 FR 51735 (Oct. 4, 1993), the Agency must determine whether the regulatory action is ''significant'' and therefore subject to OMB review and the requirements of the Executive Order. The Order defines ''significant regulatory action'' as one that is likely to result in a rule that may:

(1) Have an annual effect on the economy of $100 million or more or adversely affect in a material way the economy, a sector of the economy, productivity, competition, jobs, the environment, public health or safety, or State, local, or tribal governments or communities;

(2) Create a serious inconsistency or otherwise interfere with an action taken or planned by another agency;

(3) Materially alter the budgetary impact of entitlements, grants, user fees, or loan programs or the rights and obligations of recipients thereof; or

(4) Raise novel legal or policy issues arising out of legal mandates, the President's priorities, or the principles set forth in the Executive Order.

Pursuant to the terms of Executive Order 12866, it has been determined that this rule is a ''significant regulatory action.'' As such, this action was submitted to OMB for review. Changes made in response to OMB suggestions or recommendations will be documented in the public record.

B. Regulatory Flexibility Act and the Small Business Regulatory Enforcement Fairness Act of 1996

Under the Regulatory Flexibility Act (RFA) (5 U.S.C. 601 *et seq.*), whenever a federal agency is required by section 553 of the Administrative Procedure Act (or any other law) to publish a general notice of proposed rulemaking for any proposed rule, the Agency generally must prepare an initial regulatory flexibility analysis (IRFA) describing the economic impact of the regulatory action on small entities. The Agency must prepare an IRFA for a proposed rule unless the head of the agency certifies that it will not have a significant economic impact on a substantial number of small entities. EPA is today certifying, pursuant to section 605(b) of the RFA, that this rule will not have a significant economic impact on a substantial number of small entities. Therefore, the Agency did not prepare an IRFA.

The proposal, if promulgated, will not have a significant economic impact on a substantial number of small entities for the following reasons. The RFA defines ''small entity'' to mean a small business, small organization or small governmental jurisdiction. The proposal to allow certification in lieu of monitoring for chloroform would reduce the economic cost of compliance for any direct discharging mill that chooses to certify, including any mill that is a small business. Therefore, the proposal to allow certification, if adopted, would not have a significant economic impact on a substantial number of small entities.

With respect to the Milestones Plan proposal, EPA has determined that there are only three mills in Subpart B that are small businesses. These mills would be subject to the proposed Milestones Plan requirement only if they choose to enroll in the Voluntary Advanced Technology Incentives Program (VATIP). EPA does not believe three to be a substantial number. Furthermore, EPA has concluded that the cost of the Milstones Plan requirement to any mill choosing to enroll in VATIP that is a small business is not significant. EPA has calculated the cost of the Milestones Plan requirement to be between $4,000 and $50,000 per mill, depending on whether the mill chose Tier I, II or III. This amount is a small fraction of the total cost of the new effluent guideline requirements for Subpart B, which EPA has already certified as not having a significant impact elsewhere in today's **Federal Register.** Furthermore, the requirement to submit a Milestones Plan would only affect those mills that voluntarily choose to enroll in the program. In these circumstances, the Milestones Plan requirement would not, if promulgated, have a significant impact on a substantial number of small entities.

C. Paperwork Reduction Act

The information collection requirements in this proposed rule will be submitted for approval to the Office of Management and Budget (OMB) under the Paperwork Reduction Act, 44 U.S.C. 3501 *et seq.*, following the 60 day comment period of this notice and incorporation/consideration of those comments received on the burden of the information collection requirements. An Information Collection Request (ICR) document will be prepared by EPA for submission to OMB. However, EPA is using today's notice to solicit public comments on the estimates associated with the burden of the Milestones Plan for Tier I, Tier II, and Tier III Advanced Technology mills prior to submitting the ICR document to OMB (See Section III.D of today's notice for a discussion of the burden estimates). EPA will publish a notice in the **Federal Register** when the ICR is submitted to OMB for approval, allowing for additional public comments to be submitted to OMB on the burden estimates. The information requirements are not effective until OMB approves them and today's proposed amendments are promulgated.

As discussed in Section III.A of today's notice, EPA believes the Milestones Plan is necessary to provide NPDES permit writers with the information necessary to design a permit that contains mill specific ''interim milestones'' required by the Voluntary Advanced Technologies Incentives Program. See § 430.24(b)(2) of the final Pulp and Paper ''Cluster Rules,'' found elsewhere in today's **Federal Register**. The Milestones Plan will allow permit writers to set milestones on a schedule that the mill believes is realistic for its facility.

EPA does not believe the second proposed amendment in today's notice—certification in lieu of monitoring for chloroform—will cause any additional burden on those mills choosing to certify. In fact, EPA believes that for mills that choose to make the certification, the burden associated with monitoring will be reduced because they will no longer need to monitor for chloroform.

As discussed in more detail in Section III.D of today's notice, the total burden for the Milestones Plan is listed by Tier in the following table:

MILESTONES PLAN—ESTIMATED INDUSTRY BURDEN

Tier	Hours/Mill	Estimated number of enrolled mills	Total hours	Scoping study estimate ($)	Total cost ($)
Tier I	56	14	784	0	55,900
Tier II	154	13	2,002	182,130	325,000
Tier III	328	2	656	52,320	100,000
Total for all Tiers		29	3,442	234,450	480,900

Burden means the total time, effort, or financial resources expended by persons to generate, maintain, retain, or disclose or provide information to or for a Federal agency. This includes the time needed to review instructions; develop, acquire, install, and utilize technology and systems for the purposes of collecting, validating, and verifying information, processing and maintaining information, and disclosing and providing information; adjust the existing ways to comply with any previously applicable instructions and requirements; train personnel to be able to respond to a collection of information; search data sources; complete and review the collection of information; and transmit or otherwise disclose the information.

An Agency may not conduct or sponsor a collection of information, and a person is not required to respond to a collection of information unless it displays a currently valid OMB control number. The OMB control numbers for EPA's regulations are listed in 40 CFR part 9 and 48 CFR chapter 15.

D. Unfunded Mandates Reform Act (UMRA)

Title II of the Unfunded Mandates Reform Act of 1995 (UMRA), Pub. L. 104–4, establishes requirements for Federal agencies to assess the effects of their regulatory actions on State, local, and tribal governments and the private sector. Under section 202 of the UMRA, EPA generally must prepare a written statement, including a cost-benefit analysis, for proposed and final rules with ''Federal mandates'' that may result in expenditures to State, local, and tribal governments, in the aggregate, or to the private sector, of $100 million or more in any one year. Before promulgating an EPA rule for which a written statement is needed, section 205 of the UMRA generally requires EPA to identify and consider a reasonable number of regulatory alternatives and adopt the least costly, most cost-effective or least burdensome alternative that achieves the objectives of the rule. The provisions of section 205 do not apply when they are inconsistent with applicable law. Moreover, section 205 allows EPA to adopt an alternative other than the least costly, most cost-effective or least burdensome alternative if the Administrator publishes with the final rule an explanation why that alternative was not adopted. Before EPA establishes any regulatory requirements that may significantly or uniquely affect small governments, including tribal governments, it must have developed under section 203 of the UMRA a small government agency plan. The plan must provide for notifying potentially affected small governments, enabling officials of affected small governments to have meaningful and timely input in the development of EPA regulatory proposals with significant Federal intergovernmental mandates, and informing, educating, and advising small governments on compliance with the regulatory requirements.

EPA has determined that this rule does not contain a Federal mandate that may result in expenditures of $100 million or more for State, local, and tribal governments, in the aggregate, or the private sector in any one year. This rule would impose a reporting burden on the private sector of less than 3,500 burden hours (costed at less than $250,000) as a one-time expense. This rule does not affect tribal governments at all, will ease the burden on State governments responsible for implementing final regulations published elsewhere in this **Federal Register** today, and may ease the compliance monitoring burden of local governments responsible for implementing final regulations published elsewhere in this **Federal Register** today. Thus, today's rule is not subject to the requirements of sections 202 and 205 of the UMRA.

EPA has determined that this rule contains no regulatory requirements that might significantly or uniquely affect small governments for the same reasons cited above.

E. Executive Order 12875

To reduce the burden of Federal regulations on States and small governments, the President issued Executive Order 12875 on October 28, 1993, entitled Enhancing the Intergovernmental Partnership (58 FR 58093). In particular, this executive order requires EPA to consult with representatives of affected State, local, or tribal governments on Federal matters that significantly or uniquely affect their communities. This rule does not affect tribal governments at all, will ease the burden on State governments responsible for implementing final regulations published elsewhere in this **Federal Register** today, and may ease the compliance monitoring burden of local governments responsible for implementing final regulations published elsewhere in this **Federal Register** today.

F. Executive Order 12898

Executive Order 12898 directs Federal agencies to ''determine whether their programs, policies, and activities have disproportionally high adverse human health or environmental effects on minority populations and low-income populations.'' (Sec. 3–301 and Sec. 3–302). This proposed rule will not have adverse health or environmental effects.

G. National Technology Transfer and Advancement Act

Under section 12(d) of the National Technology Transfer and Advancement Act (''NTTAA''), the Agency is required to use voluntary consensus standards in its regulatory activities unless to do so would be inconsistent with applicable law or otherwise impractical. Voluntary consensus standards are technical standards (e.g., materials specifications, test methods, sampling procedures, business practices, etc.) that are developed or adopted by voluntary consensus standards bodies. Where available and potentially applicable voluntary consensus standards are not used by EPA, the Act requires the Agency to provide Congress, through the Office of Management and Budget, an explanation of the reasons for not using such standards.

The Agency does not believe that this proposed rule addresses any technical standards subject to the NTTAA. A

commenter who disagrees with this conclusion should indicate how the notice is subject to the Act and identify any potentially applicable voluntary consensus standards.

List of Subjects in 40 CFR Part 430

Environmental protection, Chloroform, Effluent guidelines, Elemental chlorine-free, Incentives, Milestones Plan, Pulp and paper industry, Totally chlorine-free, Water pollution control.

Dated: November 14, 1997.

Carol M. Browner,

Administrator.

For the reasons set forth in the preamble, title 40 chapter I of the Code of Federal Regulations, part 430, is proposed to be amended as follows:

PART 430—THE PULP, PAPER, AND PAPERBOARD POINT SOURCE CATEGORY

1. The authority citation for part 430 continues to read as follows:

Authority: Secs. 301, 304, 306, 307, 308, 402, and 501 of the Clean Water Act, (33 U.S.C. 1311, 1314, 1316, 1317, 1318, 1342, and 1361), and section 112 of Clean Air Act (42 U.S.C. 7412).

2. Section 430.02 is amended by adding paragraph (f) to read as follows:

§ 430.02 Monitoring requirements.

* * * * *

(f) *Certification in Lieu of Monitoring.* A discharger subject to limitations and standards for chloroform under subpart B of this part is not required to monitor for chloroform at a fiber line to which the limitations or standards apply if:

(A) The discharger demonstrates, based on two years of monitoring conducted in accordance with paragraph (a) of this section, that it is achieving the applicable limitations or standards for chloroform;

(B) The discharger certifies at that time and annually thereafter to the permitting or pretreatment control authority that the fiber line does not use either elemental chlorine or hypochlorite as bleaching agents, and that the mill consistently maintains process operation conditions representative of those employed during the two year compliance monitoring period required in paragraph (f)(1) of this section, including pre-bleaching kappa numbers, use of precursor-free raw materials, kappa factor and bleaching chemical application rates, and other factors pertinent to the initial compliance demonstration; and

(C) The discharger maintains records of the process and operating conditions referenced in paragraph (f)(2) of this section for the fiber line on site.

3. Section 430.24 is amended by revising paragraph (b)(2) and adding paragraph (c) to read as follows:

§ 430.24 Effluent limitations reflecting the degree of effluent reduction attainable by application of the best available technology economically achievable (BAT).

* * * * *

(b) * * *

(2) *Best Professional Judgment Milestones:* Narrative or numeric limitations and/or special permit conditions, as appropriate, established by the permitting authority on the basis of his or her best professional judgment that reflects a reasonable interim milestones toward achievement of the effluent limitations specified in paragraphs (b)(3) and (b)(4) of this section, as applicable, after consideration of the Milestones Plan submitted by the discharger in accordance with paragraph (c) of this section.

* * * * *

(c) All dischargers enrolled or intending to enroll in the Voluntary Advanced Technology Incentives Program must submit to the NPDES permitting authority a Milestones Plan covering all fiber lines enrolled or intending to be enrolled in that program at their mill by *[insert 14 months from date of publication of the final rule]* or the date the discharger applies for NPDES permit limitations consistent with paragraph (b) of this section, whichever is later. The Milestones Plan must include the following information:

(1) A description of each anticipated new technology component or process modification that is needed to achieve the limitations in paragraphs (b)(3) and (b)(4) of this section;

(2) A master schedule showing the sequence of implementing the new technology components or process modifications and identifying critical path relationships;

(3) A schedule for each individual new technology component or process modification that includes:

(i) The anticipated initiation and completion dates of construction, installation and operational ''shakedown'' period associated with the technology components or process modifications and, when applicable, the anticipated dates of initiation and completion of associated research, process development, and mill trials;

(ii) The anticipated date that the discharger expects the technologies and process modifications selected to achieve the limitations specified in paragraphs (b)(3) and (b)(4) of this section are operational on a full-scale basis;

(iii) Contingency plans should any technology or process specified in the Milestones Plan need to be adjusted or alternative approaches developed to ensure that the limitations specified in paragraphs (b)(3) and (b)(4) of this section are met; and

(4) A signature by the responsible corporate officer as defined in 40 CFR 122.22.

* * * * *

[FR Doc. 98–9615 Filed 4–14–98; 8:45 am]

BILLING CODE 6560–50–P

federal register

Wednesday
April 15, 1998

Part V

Department of Housing and Urban Development

Indian Housing Block Grant Program—Notice of Additional Transition Requirements—Advance Funding; Notice

DEPARTMENT OF HOUSING AND URBAN DEVELOPMENT

[Docket No. FR–4170–N–17]

RIN 2577–AB74

Indian Housing Block Grant Program—Notice of Additional Transition Requirements—Advance Funding

AGENCY: Office of the Assistant Secretary for Public and Indian Housing, HUD.

ACTION: Notice of additional transition requirements—advance funding.

SUMMARY: This notice provides instructions to tribes, tribally designated housing entities (TDHEs), and Area Offices of Native American Programs (AONAPs) to request and process an advance of Indian Housing Block Grant (IHBG) funds to ensure uninterrupted delivery of operating expenses for housing owned by an IHA for the second quarter, third quarter and possibly the fourth quarter of Federal Fiscal Year (FFY) 1998. Eligible operating expenses are those that were previously subsidized, such as salaries, benefits, taxes, insurance, travel, training, and maintenance. Until an Indian Housing Plan (IHP) is approved for a tribe, advance IHBG funds may only be used for operating expenses of units formerly assisted under the United States Housing Act of 1937 and renewal of tenant-based rental assistance where required, and may not be used for any other housing activities.

DATES: These additional transition requirements are effective April 15, 1998.

FOR FURTHER INFORMATION CONTACT: Deborah Lalancette, National Office of Native American Programs, Department of Housing and Urban Development, 1999 Broadway, Suite 3390, Denver, CO; telephone (303) 675–1600 (this is not a toll-free number). Hearing or speech-impaired individuals may access this number via TTY by calling the toll-free Federal Information Relay Service at 1–800–877–8339.

SUPPLEMENTARY INFORMATION:

I. Background

The Native American Housing Assistance and Self-Determination Act of 1996 (25 U.S.C. 4101 *et. seq.*) (NAHASDA) was enacted on October 26, 1996, and took effect on October 1, 1997. NAHASDA requires HUD to make grants on behalf of Indian tribes to carry out affordable housing activities.

Section 502 of NAHASDA states that after September 30, 1997, financial assistance may not be provided under the United States Housing Act of 1937 (1937 Act), unless such assistance is provided from amounts made available for Fiscal Year (FY) 1997 and pursuant to a commitment entered into before September 30, 1997. This section also states that after September 30, 1997, any housing developed or operated pursuant to a contract between the Secretary and an Indian housing authority (IHA) pursuant to the USHA shall not be subject to any provision of such Act or any Annual Contributions Contract (ACC).

Under NAHASDA, funds provided for affordable housing programs are made in the form of an Indian Housing Block Grant (IHBG), which will be distributed annually to tribes and/or tribally designated housing entities (TDHEs) based upon a formula-driven calculation. The tribe/TDHE is required by section 203(b) of NAHASDA to use IHBG funds in an amount necessary to provide for the continued maintenance and operation of the 1937 Act units. IHBG funds cannot be distributed until a tribe or its TDHE submits an IHP and HUD determines that the IHP is in compliance with NAHASDA requirements.

A final rule to implement NAHASDA was published on March 12, 1998, (63 FR 12334), with an effective date of April 13, 1998. Because NAHASDA cannot be fully implemented at this time, the distribution of IHBG funds is delayed, with a resulting adverse effect on recipients. There is immediate concern for any IHA that had a Fiscal Year End (FYE) of December 31, 1997, March 31, 1998, or June 30, 1998, and that does not have sufficient operating reserves to continue to pay administrative expenses for the continuation of housing services. Accordingly, pursuant to section 101(b)(2) of NAHASDA, HUD is waiving the IHP requirement in order to advance funds for the sole purpose of funding operating expenses and renewal of tenant-based rental assistance for those IHAs.

II. Purpose of this Notice

This notice provides instructions to tribes/TDHEs and Area Offices of Native American Programs (AONAPs) to request and process an advance of IHBG funds to ensure uninterrupted delivery of operating expenses for housing owned by an IHA for the second quarter, third quarter and possibly the fourth quarter of Federal Fiscal Year (FFY) 1998. Eligible operating expenses are those that were previously subsidized, such as salaries, benefits, taxes, insurance, travel, training, and maintenance. Until an IHP is approved, advance IHBG funds may only be used for operating expenses of units assisted under the 1937 Act and renewal of tenant-based rental assistance where required, and may not be used for any other housing activities such as modernization, development, etc.

III. Eligibility

Tribes/TDHEs are eligible if their IHA has a FYE of December 31, 1997, March 31, 1998, or June 30, 1998, and received operating subsidy appropriated with FFY 1997 funds under the 1937 Act. Tribes/TDHEs whose IHA had a 12/31 FYE may be eligible for up to three fiscal quarters; tribes/TDHEs whose IHA had a FYE of 3/31 may be eligible for two fiscal quarters; and tribes/TDHEs whose IHA had a FYE of 6/30 may be eligible for one fiscal quarter.

IV. Processing Steps

(a) *Determine Eligibility of Tribes/TDHEs for Subsidy.*

(1) Tribes/TDHEs are eligible for an advance of IHBG funds only if, for the fiscal periods from January 1 through December 31, 1997, April 1, 1997 through March 31, 1998, or July 1, 1997 through June 30, 1998, their IHA received operating subsidy for Low Rent, Mutual Help and/or Turnkey III units determined in the current assisted stock (CAS) calculation; and the IHA had an FYE of December 31, 1997, March 31, 1998 or June 30, 1998.

(2) Where the IHA had a FYE of September 30, 1998, the tribe shall not be eligible for an advance of IHBG funds. These IHAs will receive operating subsidy under the FFY 1997 appropriation. The operating subsidy will be provided through September 30, 1998; therefore, it is not necessary to advance IHBG funds.

(b) *Tribe or TDHE Determines if Operating Reserves are sufficient.*

(1) In order to expedite the process, AONAPs shall make a telephone call to tribes/TDHEs whose IHAs had a FYE of 12/31, 3/31, and 6/30 (giving priority to those with a 12/31 or 3/31 FYE date), informing them of their potential eligibility to receive advance IHBG funds. AONAPs shall maintain a log that consists of the date, time, and person contacted.

(2) All assisted housing programs are eligible for interim funding, which include the Low Rent, Mutual Help, Turnkey III and Section 8 programs. To determine the eligibility amount for each program:

(i) *Low Rent:* Use the subsidy eligibility for the most recent fiscal period received by the IHA, and use the amount on Line 32 of the Calculation of Performance Funding System, form HUD–52723.

(ii) *Mutual Help:* Use the HUD-approved amount for counseling and training for the prior fiscal period. Tribes/TDHEs shall not include unusual circumstances or collection losses into the request.

(iii) *Turnkey III:* Use the HUD-authorized amount approved for the deficit requested by the IHA for the most recent fiscal period. Do not request funding to reimburse equity.

(iv) *Section 8 Vouchers, Certificates and Moderate Rehabilitation:* To determine the amount of IHBG funds needed to continue providing tenant-based assistance for those contracts which expire after September 30, 1997, (when the tribe will continue to manage the assistance in a manner similar to the Section 8 Program), divide the total annual contributions approved (Form HUD–52673, Line 29) for the most recent fiscal period by the total number of unit months (Form HUD 52673, Line 8) to determine the average per unit cost. Multiply the average per unit cost by the number of expired unit months for the period October 1, 1997 to September 30, 1998.

(3) Where there are umbrella IHAs or TDHEs, the amount of operating subsidy eligibility shall be adjusted for the number of CAS units belonging to each tribe. The tribes shall then divide the adjusted subsidy eligibility by four to determine quarterly amounts.

(4) Once a quarterly amount is determined by the tribe, the tribe/TDHE shall compare the amount of the adjusted subsidy eligibility to its operating reserves to determine if reserves are sufficient to fund administrative operations for the interim period beginning January 1 through September 30, 1998 (for 12/31), April 1 through September 30, 1998 (for 3/31), and July 1, through September 30, 1998 (for 6/30). Proceeds of sale funds should be considered as part of the available reserves if they are not obligated for another purpose.

(5) If there are sufficient funds in the operating reserve account, the AONAP shall instruct the tribe/TDHE to use operating reserves to fund operating expenses for the period. Choose the applicable situation from the three identified below:

(i) Where there are insufficient operating reserves and the TDHE is the IHA and serves only one tribe, the AONAP shall comply with the guidance as set forth in section IV.(c) of this notice, below; or

(ii) Where there are insufficient operating reserve funds and an umbrella IHA or TDHE administers housing programs for multiple tribes, that entity shall determine the percentage of IHBG funds each tribe will receive. This percentage shall be based upon the amount of CAS for each tribe. Once completed, the AONAP shall continue with guidance set forth in section IV.(c) of this notice, below; or

(iii) Where a tribe is no longer part of an umbrella IHA and will be administering its own program, the tribe shall determine the amount of the IHBG funds to be advanced based upon the CAS amount as established in the estimated formula amount which was distributed by National ONAP. In such cases, there may be no operating reserves from which to draw funds if umbrella IHAs have not distributed operating reserves to the new recipient. Once completed, the tribe shall notify the AONAP of the amount of the advance and then the AONAP shall comply with the guidance as set forth in section IV.(c) of this notice, below.

(c) *Determine the Amount of Subsidy Needed.*

(1) *Operating Subsidy.*

(i) Where the tribe or TDHE determines that reserves are insufficient, the amount of the deficit may be requested in writing by the tribe with a tribal resolution and certification that operating reserves are insufficient. A tribe may choose not to request an advance of its IHBG funds if funds will be provided from alternative resources.

(ii) AONAPs shall compare requested amounts and limit requests to not more than ¼ of the CAS estimated formula amount (for each quarterly period). Formula amounts were distributed to tribes by letter dated October 15, 1997. AONAPs shall then notify the National ONAP of the total amount of funding needed for their office for tribes whose IHAs are adversely impacted by the 12/31/97, 3/31/98 and 6/30/98 FYEs.

(iii) The National ONAP shall request the advance of IHBG funds from the Office of Budget and Finance.

(iv) AONAPs will receive a Fund Assignment, form HUD–185, for their office.

(2) *Section 8.* The amount of IHBG funds determined to be necessary, based on the calculation in IV.(b)(2)(iv) of this notice, above, will be the amount provided for the Section 8 program or another similar program operated by the tribe.

(d) *Letters-of-Intent.*

(1) After receipt of Fund Assignment, AONAPs shall send out Letters-of-Intent (LOI) and a copy of the Funding Approval/Agreement, with the ''special condition,'' Form HUD–52734, to eligible recipients. The AONAPs shall check box 7b. of form HUD–52734–B and use the following language in the attachment: ''The funds may only be used to pay operating expenses and renewal tenant-based assistance of the Indian Housing Authority.''

(2) In the case of multiple tribes under an umbrella IHA or TDHE, each tribe is required to execute its own grant agreement and provide a tribal resolution acknowledging the action.

(3) Each eligible tribe shall complete Items 1, 2, and 3 of the Funding Approval/Agreement, form HUD–52734, sign the form and return it to the AONAP.

(4) AONAP staff shall complete Items 4 through 10 of the Funding Approval/Agreement, form HUD–52734. AONAP Administrators shall sign the form. A copy of the form HUD–52734 and LOI shall be sent to Field Accounting Divisions (FADs) to be recorded in the Project Accounting System (PAS) and in the Line of Credit Control System (LOCCS).

(5) Advance IHBG funds may be drawn down through the LOCCS accounting system and the recipient shall comply with 24 CFR 85.21. This provision requires that recipients minimize the time elapsing between the draw down and disbursement of funds. HUD has established the maximum time to be generally three working days.

(6) Once LOCCS accounts are established, AONAP staff shall verify grant data and ensure that edit thresholds have been established by the Office of Finance and Accounting (OFA). This can be verified by viewing the Q46, Program Area Threshold Query screen in LOCCS. The AONAP staff shall then perform the Budget Line Item spread to Account 1500.

(e) *Complete LOCCS forms.*

(1) AONAP staff shall ensure that LOCCS documents have been completed and submitted by recipients.

(2) All tribes must complete the form HUD–27054 (even if they have previously had LOCCS access) because they will be adding the category of ''IHBG'' in the LOCCS Program Area. The following original forms shall then be returned to the AONAP:

(i) *Direct Deposit Form, SF 1199A.* On this form, the recipient identifies its Tax Identification Number (TIN) and grant number.

(ii) LOCCS VRS Access Authorization, form HUD–27054 for VRS draw down privileges for a given TIN and HUD program area.

(3) Project numbers shall be established by the AONAPs and disseminated to recipients in the LOIs. An example follows:

Example project number: 98IH0212340

98 = two digit FY indicator

IH = Indian Housing Block Grant Program

02 = two digit state indicator
1234 = four digit tribal code
0 = one digit project sequence number

(4) Upon receipt of the forms from the recipients, AONAPs shall review the forms SF1199A and HUD–27054 to ensure that the information is complete and accurate. Forms shall then be forwarded to the following address: Security Administrator, FBSM, Room 3143, 451 Seventh St, SW, Washington, D.C. 20410

(f) *Reporting Requirements.*

(1) Recipients shall comply with the following requirements and standards:

(i) OMB Circular No. A–87, ''Principles for Determining Costs Applicable to Grants and Contracts with State, Local and Federally Recognized Indian Tribal Governments;''

(ii) OMB Circular A–133, ''Audits of States, Local Governments, and Non-Profit Organizations;'' and

(iii) 24 CFR part 85, ''Uniform Administrative Requirements for Grants and Cooperative Agreements to State and Local Governments.''

(2) 24 CFR part 85.41 requires recipients to provide a Federal Cash Transactions Report, SF 272, to the Federal agency making the grant on a quarterly basis. The cash report is due within 30 days after the end of the fiscal quarter and shall be submitted to the AONAP.

(g) *Additional Requirements.*

(1) In order to receive an advance of IHBG funds, tribes are required to submit a Tribal Resolution and certification that will identify the recipient and ensure that if a TDHE is to receive the money, it is authorized to do so by the tribe.

(2) If a tribe, or the TDHE of a tribe, fails to submit an IHP which is in compliance with NAHASDA requirements in FY 1998, the tribe or TDHE, as applicable, will be required to repay all IHBG funds advanced. Repayment shall occur as an offset of any NAHASDA funds which the tribe or TDHE is eligible to receive in FY 1998 or, if no such funds are available, in the next FY in which such funds become available, or through direct repayment from the tribe or TDHE to the Department, or any combination thereof.

(3) If a recipient is requesting funds for expiring Section 8 contracts, it must certify that it will continue to operate a tenant-based assistance program.

V. Summary of Processing Steps

(a) *AONAP* notifies tribes of potential eligibility.

(b) *Tribe:*

(1) Determines need; and

(2) Notifies AONAP of desired amount of IHBG advance.

(c) *AONAP:*

(1) Verifies amount requested (limited to ¼ of CAS);

(2) Notifies National ONAP of amount requested;

(3) Receives fund assignments; and

(4) Sends the following document to recipient:

(i) Letter-of-Intent (1 per tribe);

(ii) Blank form HUD–52734 (1 per tribe);

(iii) Blank form SF1199a (1 per TDHE); and

(iv) Blank form HUD–27054 (1 per recipient with access to LOCCS).

(d) *Tribe:*

(1) Completes and returns forms sent by AONAP:

(i) Executed resolution (each tribe);

(ii) Form SF–1199a; and

(iii) Form HUD–27054; and

(2) Returns forms to AONAP.

(e) *AONAP:*

(1) Completes and executes agreement, form HUD–52734;

(2) Forwards all HUD–27054s to LOCCS Administrator;

(3) Sends copies of SF–1199a, LOI and HUD–52734 to FAD; and

(4) Verifies funds have been correctly entered into LOCCS.

(f) *Tribe or TDHE:*

(1) Draws down funds via LOCCS/VRS; and

(2) Submits quarterly cash reports, SF 272, to AONAP within 30 days after FY period covered.

VI. Sample Letter-of-Intent

(Strictly for use to reserve IHBG funds for tribes/TDHEs whose IHA had a FYE date of 12/31/97, 3/31/98, or 6/30/98 and who received subsidy for units previously covered by an ACC in FFY 97.)

Name _____
Title _____
Tribe or TDHE _____
Address _____
Dear _____

Subject: Letter-of-Intent to Advance Indian Housing Block Grant Funds (IHBG) for Operating Expenses to an Indian Housing Authority (IHA) with a Fiscal Year End (FYE) date of December 31, 1997; March 31, 1998 or June 30, 1998.

Appropriation Symbol: 86X0313
PAS Code: NHB
LOCCS Project No.: _____
TIN: _____

The Native American Housing Assistance and Self-Determination Act of 1996 (NAHASDA) was enacted on October 26, 1996, and this Act and the amendments made by this Act took effect on October 1, 1997. NAHASDA requires HUD to make grants on behalf of Indian tribes to carry out affordable housing activities (to the extent amounts are made available to carry out this Act).

Section 502 of the NAHASDA states that after September 30, 1997, financial assistance may not be provided under the United States Housing Act of 1937 (1937 Act), unless such assistance is provided from amounts made available for Fiscal Year (FY) 1997 and pursuant to a commitment entered into before September 30, 1997. This Section also states that after September 30, 1997, any housing developed or operated pursuant to a contract between the Secretary and an IHA pursuant to the 1937 Act shall not be subject to any provision of such Act or any Annual Contributions Contract (ACC).

As a result, funds provided for affordable housing programs are made in the form of an IHBG, which will be distributed annually to tribes and or tribally designated housing entities (TDHE) based upon a formula-driven calculation. The tribe/TDHE is required by section 203(b) of NAHASDA to use IHBG funds in an amount necessary to provide for the continued operation and maintenance of the 1937 Act units. The IHBG cannot be distributed until HUD determines that an Indian housing Plan (IHP) is in compliance with NAHASDA requirements.

Due to delays in publishing a Final Rule, NAHASDA cannot be fully implemented at this time. The publishing delay will ultimately delay the distribution of IHBG funds and therefore have an adverse effect on recipients. There is immediate concern where an IHA had a Fiscal Year End (FYE) of December 31, 1997, March 31, 1998, or June 30, 1998, and does not have sufficient operating reserves to continue to pay operating expenses for the continuation of housing services. Accordingly, pursuant to section 101(b)(2) of NAHASDA, HUD is waiving the IHP requirement in order to advance funds for the sole purpose of funding operating expenses and renewal of tenant-based rental assistance for those IHAs.

This Letter-of-Intent and the enclosed Funding Approval/ Agreement, Form HUD–52734, obligates $_____ as an advance on your FY 1998 grant amount, which represents a distribution of funding for the period of time beginning January 1, 1998 through September 30, 1998, or April 1, 1998 through September 30, 1998, or July 1, 1998 through September 30 ,1998, as applicable. The amount obligated herein is based upon your FY 1997 adjusted subsidy eligibility, divided by four to arrive at the quarterly estimate. This is an advance of your FY 1998 IHBG amount. The remainder of the grant funds will be provided after publication of the Final Rule and approval of your IHP. If a tribe, or the TDHE of a tribe, fails to submit an IHP which is in compliance with NAHASDA requirements in FY 1998, the tribe or TDHE, as applicable, will be required to repay all IHBG funds advanced. Repayment shall occur as an offset of any NAHASDA funds which the tribe or TDHE is eligible to receive in FY 1998, or if no such funds are available, in the next FY in which such funds become available, or through direct repayment from the tribe or TDHE to the Department, or any combination thereof.

Funds may be drawn down after a Line of Credit Control System (LOCCS) account is established by the Department. The LOCCS is a computerized cash management and

disbursement system that uses electronic wire-transfer payments and is accessed by telephone using a Voice Response System (VRS).

Enclosed are several forms that must be completed and returned to your Area Office of Native American Programs (AONAP) in order to gain access to LOCCS.

The required LOCCS forms are as follows:

I. Direct Deposit Form, SF 1199A. On this form, the recipient identifies its Tax Identification Number (TIN) and grant number. This form must be completed even if you currently have a LOCCS account as this action will add the IHBG account.

Additionally, you must attach a copy of a voided check.

II. LOCCS VRS Access Authorization, for form HUD–27054, for VRS draw down privileges for a given TIN and HUD program area, with original signatures.

Other items required:

1. Funding Approval/Agreement, form HUD–52734. Complete Items 1, 2, and 3.

2. A Tribal Resolution which:

a. Identifies and authorizes the TDHE to receive and administer the IHBG funds, if applicable;

b. Certifies that operating reserves are insufficient;

c. Certifies that funds will be used solely for operating expenses that were previously subsidized;

d. Identifies the specific amount of the advance requested;

e. Certifies that the tribe will be responsible to repay any advanced IHBG funds if the tribe or TDHE fails to submit an IHP which is in compliance with NAHASDA requirements; and

f. certifies that the recipient will continue to operate a tenant-based rental assistance program, if applicable.

If you have any questions regarding this program, please call (insert AONAP telephone number).

Very sincerely yours,

Administrator

Enclosures:
Form SF–1199A
Form HUD–27054
Form HUD–52734
Tribal Resolution

VII. Example of Tribal Resolution and Certification

Whereas, the _____ Tribe (herein known as the Tribe) was formerly served by _____ Housing Authority (herein known as the _____ HA); and

Whereas, the Tribe designated _____ as the Tribally Designated Housing Entity (herein known as TDHE) and as such, the TDHE is authorized to receive Indian Housing Block Grant (herein known as IHBG) funds to administer affordable housing programs on behalf of the Tribe; and

Whereas, the _____ HA had a Fiscal Year End (FYE) date of December 31, 1997, March 31, 1998 or June 30, 1998; and

Whereas, it has been determined, and is hereby certified by the Tribe, that there are insufficient operating reserves available to continue funding operating expenses for housing units formerly covered under an Annual Contributions Contract (ACC) between the Department and the _____ HA; and

Whereas, the Tribe determined to take an advance of its IHBG funds (as authorized by the Native American Housing Assistance and Self-Determination Act of 1996) in order to continue to fund operating expenses for tenant-based rental assistance and/or for the continued operation and maintenance of the current assisted housing stock; and

Whereas, once an Indian Housing Plan (IHP) is determined to be in compliance with NAHASDA and IHBG funds are approved in FY 1998, the total formula amount will be reduced by the amount of IHBG funds advanced; and

Whereas, the Tribe certifies that the IHBG funds advanced will be used solely for operating expenses or tenant-based rental assistance that was previously provided; and

Whereas, the Tribe or TDHE certifies that it will continue to operate a tenant-based rental assistance program, if applicable; and

Whereas, the Tribe certifies that it will be responsible to repay all IHBG funds advanced if the Tribe, or the TDHE of the Tribe, fails to submit or get HUD approval of the IHP.

Therefore, be it resolved that the Tribe requests an advance of IHBG funds in the amount of $ _____ for the period beginning: (Select the applicable interim period.) ____January 1, 1998 through September 30, 1998 ____April 1, 1998 through September 30, 1998 ____July 1, 1998 through September 30, 1998

VIII. Findings and Certifications

Paperwork Reduction Act Statement

The information collection requirements contained in this notice have been approved by the Office of Management and Budget under the Paperwork Reduction Act of 1995 and assigned control number 2577–0218. An agency may not conduct or sponsor, and a person is not required to respond to, a collection of information unless the collection displays a valid control number.

Executive Order 12612, Federalism

The General Counsel has determined, as the Designated Official for HUD under section 6(a) of Executive Order 12612, Federalism, that the policies contained in this notice will not have substantial direct effects on states or their political subdivisions, or the relationship between the federal government and the states, or on the distribution of power and responsibilities among the various levels of government. The notice only provides for temporary transition requirements for the initial participation by Indian tribes in a new statutory program.

Environmental Review

A Finding of No Significant Impact with respect to the environment was made at the time of development of the January 27, 1997 notice in accordance with HUD regulations at 24 CFR part 50, which implement section 102(2)(C) of the National Environmental Policy Act of 1969. That Finding of No Significant Impact remains applicable to this notice and is available for public inspection between 7:30 a.m. and 5:30 p.m. weekdays in the Office of the Rules Docket Clerk, Office of General Counsel, Room 10276, Department of Housing and Urban Development, 451 Seventh Street, SW, Washington, DC 20410–0500.

Authority: 25 U.S.C. 4116(a).

Dated: April 8, 1998.

Deborah Vincent,

Acting Assistant Secretary for Public and Indian Housing.

[FR Doc. 98–10016 Filed 4–14–98; 8:45 am]

BILLING CODE 4210–33–P

federal register

Wednesday
April 15, 1998

Part VI

The President

Proclamation 7081—Pan American Day and Pan American Week, 1998

Federal Register
Vol. 63, No. 72
Wednesday, April 15, 1998

Presidential Documents

Title 3—

The President

Proclamation 7081 of April 10, 1998

Pan American Day and Pan American Week, 1998

By the President of the United States of America

A Proclamation

Today, the nations of the Americas stand at the forefront of a promising new era of exciting growth and global cooperation. Americans north and south of the equator are communicating, interacting, and trading with one another more than ever before. All the nations in our hemisphere but one enjoy freely elected governments that promote human rights, free enterprise, and sustainable economic development through free trade. These vibrant democracies continue to seek opportunities to work together for the security, prosperity, and general welfare of all our citizens.

In keeping with this spirit of cooperation, the leaders of the 34 American democracies will meet in Santiago, Chile, on April 18 and 19 for the second Summit of the Americas. The United States hosted the first such summit in Miami in December 1994, and we look forward to strengthening our involvement in what is becoming a mature partnership that is fostering increased prosperity and security for our country. We hope to reach agreements in Santiago that will enhance hemispheric collaboration in more than 20 areas—including education, economic integration, democracy, justice, counternarcotics, security, poverty, and human rights.

This month also marks the 50th anniversary of the founding of the Organization of American States (OAS), a cornerstone of cooperation in our hemisphere. The most recent successes of the OAS include agreements against corruption and illegal firearms trafficking and ratification of the Washington Protocol, which provides for the suspension from the OAS of any country whose democracy has been overthrown by force. We applaud the crucial role the OAS plays in promoting and preserving democracy and human rights in the Americas. We look forward to its continued success in multilateral efforts to deepen the roots of democracy in this hemisphere and create new possibilities for progress in the next millennium.

The peoples of the Americas stand united in a commitment to democratic values and to increased regional cooperation and understanding. The partnership among our countries is laying the foundations for lasting freedom, prosperity, and peace in our hemisphere and bringing to reality our shared vision of a brighter future.

NOW, THEREFORE, I, WILLIAM J. CLINTON, President of the United States of America, by virtue of the authority vested in me by the Constitution and laws of the United States, do hereby proclaim Tuesday, April 14, 1998, as Pan American Day and April 12 through April 18, 1998, as Pan American Week. I urge the Governors of the 50 States, the Governor of the Commonwealth of Puerto Rico, and the officials of other areas under the flag of the United States of America to honor these observances with appropriate ceremonies and activities.

IN WITNESS WHEREOF, I have hereunto set my hand this tenth day of April, in the year of our Lord nineteen hundred and ninety-eight, and of the Independence of the United States of America the two hundred and twenty-second.

William J. Clinton

[FR Doc. 98–10193
Filed 4–14–98; 8:45 am]
Billing code 3195–01–P

federal register

Wednesday
April 15, 1998

Part VII

The President

Presidential Determination No. 98–20 of April 3, 1998—Use of Nonproliferation, Anti-Terrorism, Demining and Related Programs Account Funds for the U.S. Contribution to the Korean Peninsula Energy Development Organization (KEDO)

Federal Register
Vol. 63, No. 72
Wednesday, April 15, 1998

Presidential Documents

Title 3—

The President

Presidential Determination No. 98–20 of April 3, 1998

Use of Nonproliferation, Anti-Terrorism, Demining and Related Programs Account Funds for the U.S. Contribution to the Korean Peninsula Energy Development Organization (KEDO)

Memorandum for the Secretary of State

Pursuant to the authority vested in me by section 614(a)(1) of the Foreign Assistance Act of 1961, as amended, 22 U.S.C. 2364(a)(1), I hereby determine that it is important to the security interests of the United States to furnish up to $30 million in funds made available under the heading ''Nonproliferation, Anti-Terrorism, Demining and Related Programs'' in title II of the Foreign Operations, Export Financing, and Related Programs Appropriation Act, 1998 (Public Law 105–118) for the United States contribution to the Korean Peninsula Energy Development Organization without regard to any provision of law within the scope of section 614(a)(1). I hereby authorize the furnishing of such assistance.

You are hereby authorized and directed to transmit this determination to the Congress and to arrange for its publication in the **Federal Register**.

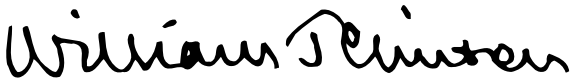

THE WHITE HOUSE,
Washington, April 3, 1998.

[FR Doc. 98–10194
Filed 4–14–98; 9:17 am]
Billing code 4710–10–P

Reader Aids

Federal Register

Vol. 63, No. 72

Wednesday, April 15, 1998

CUSTOMER SERVICE AND INFORMATION

Federal Register/Code of Federal Regulations

General Information, indexes and other finding aids	**202–523–5227**
Laws	**523–5227**

Presidential Documents

Executive orders and proclamations	**523–5227**
The United States Government Manual	**523–5227**

Other Services

Electronic and on-line services (voice)	**523–4534**
Privacy Act Compilation	**523–3187**
Public Laws Update Service (numbers, dates, etc.)	**523–6641**
TTY for the deaf-and-hard-of-hearing	**523–5229**

ELECTRONIC RESEARCH

World Wide Web

Full text of the daily Federal Register, CFR and other publications:

http://www.access.gpo.gov/nara

Federal Register information and research tools, including Public Inspection List, indexes, and links to GPO Access:

http://www.nara.gov/fedreg

E-mail

PENS (Public Law Electronic Notification Service) is an E-mail service that delivers information about recently enacted Public Laws. To subscribe, send E-mail to

listproc@etc.fed.gov

with the text message:

subscribe publaws-l <firstname> <lastname>

Use listproc@etc.fed.gov only to subscribe or unsubscribe to PENS. We cannot respond to specific inquiries at that address.

Reference questions. Send questions and comments about the Federal Register system to:

info@fedreg.nara.gov

The Federal Register staff cannot interpret specific documents or regulations.

FEDERAL REGISTER PAGES AND DATES, APRIL

15739–16084 1
16085–16386 2
16387–16668 3
16669–16876 6
16877–17048 7
17049–17306 8
17307–17666 9
17667–17930 10
17931–18116 13
18117–18306 14
18307–18816 15

CFR PARTS AFFECTED DURING APRIL

At the end of each month, the Office of the Federal Register publishes separately a List of CFR Sections Affected (LSA), which lists parts and sections affected by documents published since the revision date of each title.

3 CFR

Proclamations:
7075 16385
7076 16668
7077 16873
7078 17307
7079 18111
7080 18115
7081 18811
Administrative Orders:
Presidential Determinations:
No. 98–20 of April 3, 1998 18815
Executive Order:
13079 17309
13080 17667

5 CFR

Ch. XXV 18501
410 16877
831 17049
844 17049
Proposed Rules:
Ch. XIV 16141

7 CFR

91 16370
93 16370
96 16370
301 16877
354 16878
405 17050
457 17050
925 16387
959 16390
1425 17311
1700 .....16085, 18307
1942 16088
1951 16088
Proposed Rules:
301 16908
1468 16142
1710 17127
1714 17127
1728 17128
1755 17738
1956 17125

8 CFR

264 17489
Proposed Rules:
274a 16909

9 CFR

85 17315
97 16881
130 18117
Proposed Rules:
200 16913
301 17959
318 17959
320 17959

10 CFR

430 .....16446, 16669
Proposed Rules:
140 17130
171 17130
430 .....16706, 16707
625 17260

12 CFR

4 16378
202 16392
208 16378
226 16669
303 17056
309 16402
325 17056
326 17056
327 17056
337 16378
346 17056
347 17056
351 17056
362 17056
563 16378
Proposed Rules:
28 16708
220 16446
221 16446
224 16446
544 18149
563 17966

13 CFR

121 16882
125 .....
126 .....
Proposed Rules:
121 .....16148, 18150
125 .....16148, 18150
126 .....16148, 18150

14 CFR

21 16089
25 17090
39 .....16091, 16094, 16096, 16098, 16100, 16102, 16104, 16107, 16109, 16110, 16111, 16678, 16679, 16681, 16883, 16884, 16886, 17316, 17318, 17320, 17321, 17323, 17324, 17669, 17670, 17672, 17674, 17676, 17677, 17931, 17932, 18118, 18119, 18121, 18307, 18308
71 .....16408, 16888, 16889, 17092, 17934, 17935, 17936, 18371, 18312, 18313
73 16890
97 .....17937, 17938, 17939
107 18076
108 18076

150 16409
Proposed Rules:
Ch. I 16913
39 ....16163, 16165, 16167, 16169 16170, 16172, 16174, 16175, 16177, 16447, 16449, 16709, 16711, 16713, 16715, 16716, 16916, 17130, 17341, 17342, 17344, 17346, 17740, 17741, 17742, 17743, 17969, 17970, 17972, 18151, 18153, 18155, 18156, 18158, 18160, 18163, 18164, 18167, 18341, 18342
71 ....16451, 16718, 17740, 17741, 17742, 17743
91 16452
121 16452
125 16452
129 16452

15 CFR

280 18260
806 16890
Proposed Rules:
30 18344

16 CFR

Proposed Rules:
20 17132
235 17348

17 CFR

241 17943
Proposed Rules:
10 16453

19 CFR

10 16414
118 16683
123 16414
128 16414
141 16414
143 16414
145 16414
148 16414

20 CFR

200 17325
216 17326

21 CFR

5 18314
101 17327
172 16417
520 17329
558 17947
606 16685
610 16685
640 16685
1270 16685
Proposed Rules:
26 17744
1308 18170

22 CFR

40 16686
41 16892
93 16686
121 17329

24 CFR

206 17654

25 CFR

514 17489

26 CFR

1 16895
Proposed Rules:
1 17973

27 CFR

9 16902

28 CFR

Proposed Rules:
2 17771

29 CFR

1910 17093
1926 17093
4044 18317
Proposed Rules:
1910 16918
2510 18345

30 CFR

203 17330
913 17094
Proposed Rules:
56 17781
57 17781
72 17492
75 17492
206 17349
210 17133
216 17133
913 16719
914 ....16723, 16725
916 16728
920 16730
924 ....18172, 18173
944 17138

31 CFR

285 16354

33 CFR

100 ....16114, 16115, 16687, 16688
110 16688
117 ....16905, 17679, 18319, 18320, 18321, 18322, 18323
165 ....16116, 17098
Proposed Rules:
20 16731
66 18349
100 16179
117 ....17781, 18350
151 17783
165 16181

34 CFR

280 16906
303 18290
Proposed Rules:
303 18297

37 CFR

Proposed Rules:
201 17142

39 CFR

Proposed Rules:
111 17143
501 16464

40 CFR

8 18323
51 17331
52 ....16433, 16435, 17680, 18122
62 17683
63 ....17933, 18504
180 ....16437, 16690, 17099, 17101, 17687, 17690, 17692, 17699, 18326, 18329
185 17101
186 17101
258 17706
261 18504
430 18504
Proposed Rules:
8 18352
52 ....16465, 16751, 17349, 17793, 18177
62 17793
63 18754
131 ....16182, 18501
261 18354
300 16465
372 16754
430 18796

41 CFR

51–5 16439
51–6 16439
51–8 16439
51–9 16439
51–10 16439
Proposed Rules:
301–3 16936
301–10 16936

42 CFR

121 16296
422 18124

43 CFR

4700 18338

44 CFR

65 ....17731, 17732
67 17734
206 17108
Proposed Rules:
67 17793

45 CFR

2510 18135
2516 18135
2517 18135
2519 18135
2521 18135
2540 18135

46 CFR

Proposed Rules:
5 16731

47 CFR

1 17118
4 17118
52 16440
64 16696
73 ....16906, 17123, 17736
76 ....16906, 17333
Proposed Rules:
0 16938
1 ....16188, 16938, 17974
13 16938
22 16938
24 16938
26 16938
27 16938
73 ....17123, 17798
80 16938
87 16938
90 16938
95 16938
97 16938
101 16938

48 CFR

Ch. 28 16118
209 17124
212 17124
213 17124
217 17124
222 17124
235 17124
243 17124
252 ....16871, 17124
801 17334
810 17334
811 17334
812 17334
836 17334
852 17334
870 17304
1843 17339
1852 17339
Proposed Rules:
803 16955
852 16955
915 17799
970 17799

49 CFR

395 16697
533 16699
571 16215
572 16136
Proposed Rules:
393 17811
571 16217
575 17974

50 CFR

217 17948
227 17948
230 16701
622 ....18139, 18144, 18147
660 17736
679 ....16705, 17737
Proposed Rules:
17 ....16217, 16218, 17350, 17981
285 ....16220, 17353
424 16955
644 17353
679 16223
697 18178

REMINDERS

The items in this list were editorially compiled as an aid to Federal Register users. Inclusion or exclusion from this list has no legal significance.

RULES GOING INTO EFFECT APRIL 15, 1998

AGRICULTURE DEPARTMENT

Rural Utilities Service

General information, organization and functions, and loan making authority; correction; published 4-15-98

ENVIRONMENTAL PROTECTION AGENCY

Pesticides; tolerances in food, animal feeds, and raw agricultural commodities:

Canola oil; published 4-15-98

Spinosad; published 4-15-98

HEALTH AND HUMAN SERVICES DEPARTMENT

Children and Families Administration

Head Start Program:

Eligibility, recruitment, etc.; programs serving specific populations; published 3-16-98

HEALTH AND HUMAN SERVICES DEPARTMENT

Food and Drug Administration

Organization, functions, and authority delegations:

Current addresses for headquarters and field offices; published 4-15-98

INTERIOR DEPARTMENT

Fish and Wildlife Service

Endangered and threatened species:

Fat threeridge, etc. (seven freshwater mussels from Alabama, Florida, and Georgia); published 3-16-98

POSTAL SERVICE

Domestic Mail Manual:

Rate, fee, and classification changes; published 3-16-98

TRANSPORTATION DEPARTMENT

Coast Guard

Drawbridge operations:

Maine; published 4-15-98

New York; published 4-15-98

TRANSPORTATION DEPARTMENT

Federal Aviation Administration

Airworthiness directives:

Construcciones Aeronauticas, S.A.; published 3-11-98

Dassault; published 3-11-98

TRANSPORTATION DEPARTMENT

Research and Special Programs Administration

Pipeline safety:

Drug use and alcohol misuse control in natural gas, liquefied natural gas, and hazardous pipeline operations; published 12-24-97

Drug use and alcohol misuse control in natural gas, liquefied natural gas, and hazardous liquid pipeline operations; effective date; published 3-24-98

COMMENTS DUE NEXT WEEK

AGRICULTURE DEPARTMENT

Animal and Plant Health Inspection Service

Interstate transportation of animals and animal products (quarantine):

Tuberculosis in livestock other than cattle and bison; testing requirements; comments due by 4-24-98; published 2-23-98

Plant-related quarantine, domestic:

Oriental fruit fly; comments due by 4-24-98; published 2-23-98

AGRICULTURE DEPARTMENT

Commodity Credit Corporation

Export programs:

Foreign donation of agricultural commodities; changes, corrections, and clarifications; comments due by 4-24-98; published 2-23-98

Foreign donation of agricultural commodities; ocean transportation procurement procedures; comments due by 4-24-98; published 2-23-98

AGRICULTURE DEPARTMENT

Forest Service

Alaska National Interest Lands Conservation Act; Title VIII implementation (subsistence priority):

Waters subject to subsistence priority; redefinition; comments due by 4-20-98; published 12-17-97

AGRICULTURE DEPARTMENT

Rural Utilities Service

Telecommunications standards and specifications:

Materials, equipment, and construction—

Special equipment contract (including installation); comments due by 4-21-98; published 2-20-98

COMMERCE DEPARTMENT

International Trade Administration

Uruguay Round Agreements Act (URAA):

Antidumping and countervailing duties; five-year ''sunset'' review procedures; comments due by 4-20-98; published 3-20-98

COMMERCE DEPARTMENT

National Oceanic and Atmospheric Administration

Fishery conservation and management:

Alaska; fisheries of Exclusive Economic Zone—

Halibut; comments due by 4-20-98; published 3-4-98

West Coast States and Western Pacific fisheries—

Northern anchovy; comments due by 4-22-98; published 3-23-98

COMMODITY FUTURES TRADING COMMISSION

Organization, functions, and authority delegations:

Exemptive, non-action and interpretive letters; requests filing procedures establishment; comments due by 4-22-98; published 3-27-98

ENVIRONMENTAL PROTECTION AGENCY

Air pollutants, hazardous; national emission standards:

Petroleum refineries, new and existing; comments due by 4-20-98; published 3-20-98

Air programs; approval and promulgation; State plans for designated facilities and pollutants:

Kansas; comments due by 4-20-98; published 3-20-98

Air quality implementation plans; approval and promulgation; various States:

California; comments due by 4-20-98; published 3-20-98

Illinois; comments due by 4-22-98; published 3-23-98

Ohio; comments due by 4-22-98; published 3-23-98

Virginia; comments due by 4-22-98; published 3-23-98

Air quality implementation plans; √A√approval and promulgation; various States; air quality planning purposes; designation of areas:

Iowa; comments due by 4-20-98; published 3-19-98

Clean Air Act:

Federal and State operating permits programs; draft rules and accompanying information availability; comments due by 4-24-98; published 3-25-98

Emergency response plans:

Hazardous substance releases; reimbursement to local governments; comments due by 4-20-98; published 2-18-98

Pesticides; tolerances in food, animal feeds, and raw agricultural commodities:

Dimethomorph; comments due by 4-20-98; published 2-18-98

Titanium dioxide; comments due by 4-24-98; published 3-25-98

Superfund program:

National oil and hazardous substances contingency plan—

National priorities list update; comments due by 4-20-98; published 3-19-98

National priorities list update; comments due by 4-22-98; published 3-23-98

EQUAL EMPLOYMENT OPPORTUNITY COMMISSION

Federal sector equal employment opportunity:

Complaint processing regulations; alternative dispute resolution programs availability, etc.; comments due by 4-21-98; published 2-20-98

FARM CREDIT ADMINISTRATION

Farm credit system:

Organization—

Balloting and stockholder reconsideration issues; comments due by 4-20-98; published 3-20-98

FEDERAL COMMUNICATIONS COMMISSION

Practice and procedure:

Regulatory fees (1998 FY); assessment and collection; comments due by 4-22-98; published 4-2-98

Radio and television broadcasting:

Emergency alert system; comments due by 4-20-98; published 4-1-98

Radio stations; table of assignments:

Montana; comments due by 4-20-98; published 3-9-98

New York; comments due by 4-20-98; published 3-9-98

HEALTH AND HUMAN SERVICES DEPARTMENT

Health Care Financing Administration

Medicare and Medicaid:

Hospital participation conditions; provider agreements and supplier approval; comments due by 4-20-98; published 2-17-98

HOUSING AND URBAN DEVELOPMENT DEPARTMENT

Federal Housing Enterprise Oversight Office

Privacy Act; implementation; comments due by 4-24-98; published 2-23-98

INTERIOR DEPARTMENT

Indian Affairs Bureau

Indian Gaming Regulatory Act:

Class III (casino) gaming on Indian lands; authorization procedures when States raise Eleventh Amendment defense; comments due by 4-22-98; published 1-22-98

INTERIOR DEPARTMENT

Fish and Wildlife Service

Alaska National Interest Lands Conservation Act; Title VIII implementation (subsistence priority):

Waters subject to subsistence priority; redefinition; comments due by 4-20-98; published 12-17-97

Endangered and threatened species:

Howell's spectacular thelypody; comments due by 4-20-98; published 3-5-98

INTERIOR DEPARTMENT

Surface Mining Reclamation and Enforcement Office

Permanent program and abandoned mine land reclamation plan submissions:

Maryland; comments due by 4-21-98; published 4-6-98

LABOR DEPARTMENT

Mine Safety and Health Administration

Coal mine safety and health standards:

Occupational noise exposure; comments due by 4-24-98; published 4-10-98

PERSONNEL MANAGEMENT OFFICE

Administrative law judges; appointment, pay, and removal; comments due by 4-24-98; published 2-23-98

TRANSPORTATION DEPARTMENT

Coast Guard

Regattas and marine parades:

River Race Augusta; comments due by 4-23-98; published 3-24-98

TRANSPORTATION DEPARTMENT

Federal Aviation Administration

Airworthiness directives:

de Havilland; comments due by 4-22-98; published 3-23-98

Aermacchi; comments due by 4-24-98; published 3-13-98

Aerospatiale; comments due by 4-20-98; published 3-20-98

Airbus; comments due by 4-20-98; published 3-20-98

AlliedSignal Inc.; comments due by 4-24-98; published 2-23-98

Boeing; comments due by 4-24-98; published 2-4-98

British Aerospace; comments due by 4-24-98; published 3-19-98

Cessna; comments due by 4-24-98; published 2-13-98

Construcciones Aeronauticas, S.A.; comments due by 4-22-98; published 3-23-98

Dornier; comments due by 4-20-98; published 3-20-98

Fokker; comments due by 4-20-98; published 3-20-98

Glaser-Dirks Flugzeugbau GmbH; comments due by 4-24-98; published 3-19-98

Pilatus Aircraft Ltd.; comments due by 4-24-98; published 3-24-98

Superior Air Parts, Inc.; comments due by 4-20-98; published 2-17-98

Airworthiness standards:

Special conditions—

Boeing model 757-300 airplane; comments due by 4-24-98; published 3-25-98

Class E airspace; comments due by 4-20-98; published 3-9-98

TRANSPORTATION DEPARTMENT

Federal Highway Administration

Engineering and traffic operations:

Emergency relief program; disaster eligibility threshold; comments due by 4-20-98; published 2-19-98

TREASURY DEPARTMENT

Internal Revenue Service

Income taxes:

State and political subdivision obligations; cross-reference; comments due by 4-22-98; published 1-22-98

LIST OF PUBLIC LAWS

This is a continuing list of public bills from the current session of Congress which have become Federal laws. It may be used in conjunction with ''P L U S'' (Public Laws Update Service) on 202–523–6641. This list is also available online at http://www.nara.gov/fedreg.

The text of laws is not published in the **Federal Register** but may be ordered in ''slip law'' (individual pamphlet) form from the Superintendent of Documents, U.S. Government Printing Office, Washington, DC 20402 (phone, 202–512–1808). The text will also be made available on the Internet from GPO Access at http://www.access.gpo.gov/su_docs/. Some laws may not yet be available.

S. 750/P.L. 105–167

To consolidate certain mineral interests in the National Grasslands in Billings County, North Dakota, through the exchange of Federal and private mineral interests to enhance land management capabilities and environmental and wildlife protection, and for other purposes. (Apr. 13, 1998; 112 Stat. 40)

Last List April 8, 1998

Public Laws Electronic Notification Service (PENS)

PENS is a free electronic mail notification service of newly enacted public laws. To subscribe, send E-mail to **listproc@etc.fed.gov** with the text message: **subscribe PUBLAWS-L** (your name)

Note: This service is strictly for E-mail notification of new public laws. The text of laws is not available through this service. **PENS** cannot respond to specific inquiries sent to this address.