3–25–98
Vol. 63 No. 57
Pages 14329–14600

federal register

Wednesday
March 25, 1998

Briefings on how to use the Federal Register
For information on briefings in Washington, DC, and Salt Lake City, UT, see announcement on the inside cover of this issue.

Now Available Online via
GPO Access

Free online access to the official editions of the *Federal Register, the Code of Federal Regulations* and other Federal Register publications is available on *GPO Access*, a service of the U.S. Government Printing Office at:

http://www.access.gpo.gov/nara/index.html

For additional information on ***GPO Access*** products, services and access methods, see page II or contact the *GPO Access* User Support Team via:

- ★ Phone: toll-free: 1-888-293-6498
- ★ Email: gpoaccess@gpo.gov

The **FEDERAL REGISTER** is published daily, Monday through Friday, except official holidays, by the Office of the Federal Register, National Archives and Records Administration, Washington, DC 20408, under the Federal Register Act (44 U.S.C. Ch. 15) and the regulations of the Administrative Committee of the Federal Register (1 CFR Ch. I). The Superintendent of Documents, U.S. Government Printing Office, Washington, DC 20402 is the exclusive distributor of the official edition.

The **Federal Register** provides a uniform system for making available to the public regulations and legal notices issued by Federal agencies. These include Presidential proclamations and Executive Orders, Federal agency documents having general applicability and legal effect, documents required to be published by act of Congress, and other Federal agency documents of public interest.

Documents are on file for public inspection in the Office of the Federal Register the day before they are published, unless the issuing agency requests earlier filing. For a list of documents currently on file for public inspection, see http://www.nara.gov/fedreg.

The seal of the National Archives and Records Administration authenticates the Federal Register as the official serial publication established under the Federal Register Act. Under 44 U.S.C. 1507, the contents of the **Federal Register** shall be judicially noticed.

The **Federal Register** is published in paper and on 24x microfiche. It is also available online at no charge as one of the databases on GPO Access, a service of the U.S. Government Printing Office.

The online edition of the **Federal Register** is issued under the authority of the Administrative Committee of the Federal Register as the official legal equivalent of the paper and microfiche editions (44 U.S.C. 4101 and 1 CFR 5.10). It is updated by 6 a.m. each day the **Federal Register** is published and it includes both text and graphics from Volume 59, Number 1 (January 2, 1994) forward.

GPO Access users can choose to retrieve online **Federal Register** documents as TEXT (ASCII text, graphics omitted), PDF (Adobe Portable Document Format, including full text and all graphics), or SUMMARY (abbreviated text) files. Users should carefully check retrieved material to ensure that documents were properly downloaded.

On the World Wide Web, connect to the **Federal Register** at http://www.access.gpo.gov/nara. Those without World Wide Web access can also connect with a local WAIS client, by Telnet to swais.access.gpo.gov, or by dialing (202) 512-1661 with a computer and modem. When using Telnet or modem, type swais, then log in as guest with no password.

For more information about GPO Access, contact the GPO Access User Support Team by E-mail at gpoaccess@gpo.gov; by fax at (202) 512–1262; or call (202) 512–1530 or 1–888–293–6498 (toll free) between 7 a.m. and 5 p.m. Eastern time, Monday–Friday, except Federal holidays.

The annual subscription price for the **Federal Register** paper edition is $555, or $607 for a combined **Federal Register,** Federal Register Index and List of CFR Sections Affected (LSA) subscription; the microfiche edition of the **Federal Register** including the Federal Register Index and LSA is $220. Six month subscriptions are available for one-half the annual rate. The charge for individual copies in paper form is $8.00 for each issue, or $8.00 for each group of pages as actually bound; or $1.50 for each issue in microfiche form. All prices include regular domestic postage and handling. International customers please add 25% for foreign handling. Remit check or money order, made payable to the Superintendent of Documents, or charge to your GPO Deposit Account, VISA, MasterCard or Discover. Mail to: New Orders, Superintendent of Documents, P.O. Box 371954, Pittsburgh, PA 15250–7954.

There are no restrictions on the republication of material appearing in the **Federal Register.**

How To Cite This Publication: Use the volume number and the page number. Example: 63 FR 12345.

SUBSCRIPTIONS AND COPIES

PUBLIC	
Subscriptions:	
Paper or fiche	**202–512–1800**
Assistance with public subscriptions	**512–1806**
General online information	**202–512–1530; 1–888–293–6498**
Single copies/back copies:	
Paper or fiche	**512–1800**
Assistance with public single copies	**512–1803**
FEDERAL AGENCIES	
Subscriptions:	
Paper or fiche	**523–5243**
Assistance with Federal agency subscriptions	**523–5243**

FEDERAL REGISTER WORKSHOP

THE FEDERAL REGISTER: WHAT IT IS AND HOW TO USE IT

FOR: Any person who uses the Federal Register and Code of Federal Regulations.

WHO: Sponsored by the Office of the Federal Register.

WHAT: Free public briefings (approximately 3 hours) to present:

1. The regulatory process, with a focus on the Federal Register system and the public's role in the development regulations.
2. The relationship between the Federal Register and Code of Federal Regulations.
3. The important elements of typical Federal Register documents.
4. An introduction to the finding aids of the FR/CFR system.

WHY: To provide the public with access to information necessary to research Federal agency regulations which directly affect them. There will be no discussion of specific agency regulations.

SALT LAKE CITY, UT

WHEN: April 9, 1998 at 9:00 am.

WHERE: State Office Building Auditorium
State Office Building, Capitol Hill
(Just north of Capitol)
Salt Lake City, UT

RESERVATIONS: Call the Federal Information Center
1–800–688–9889 x 0

Printed on recycled paper containing 100% post consumer waste

Contents

Federal Register

Vol. 63, No. 57

Wednesday, March 25, 1998

Agricultural Marketing Service
RULES
Spearmint oil produced in Far West
Correction, 14334

Agriculture Department
See Agricultural Marketing Service
See Animal and Plant Health Inspection Service
See Federal Crop Insurance Corporation
See Food and Nutrition Service

Animal and Plant Health Inspection Service
RULES
Interstate transportation of animals and animal products (quarantine):
Brucellosis in cattle and bison—
State and area classifications, 14335–14336

Architectural and Transportation Barriers Compliance Board
PROPOSED RULES
Americans with Disabilities Act; implementation:
Accessibility guidelines for transportation vehicles—
Over-the-road buses, 14571–14578

Army Department
NOTICES
Environmental statements; availability, etc.:
Base realignment and closure—
Sierra Army Depot, CA, 14430–14431
Military traffic management:
Freight carriers qualifying program—
Brokers inclusion standards, 14431

Centers for Disease Control and Prevention
NOTICES
Advisory committees; annual reports; availability; correction, 14504
Healthy People 2010 Planning Process; birth defects, genetic disorders, and developmental disabilities work group; recommendations; input request
Correction, 14468

Children and Families Administration
PROPOSED RULES
Personal Responsibility and Work Opportunity Reconciliation Act of 1996; implementation:
Computerized support enforcement systems, 14402–14414

Commerce Department
See Export Administration Bureau
See Foreign-Trade Zones Board
See International Trade Administration
See National Oceanic and Atmospheric Administration
NOTICES
Agency information collection activities:
Submission for OMB review; comment request, 14421–14422

Committee for the Implementation of Textile Agreements
NOTICES
Cotton, wool, and man-made textiles:
Republic of Maldives, 14427
Textile and apparel categories:
Correlation wih U.S. Harmonized Tariff Schedule, 14428

Commodity Futures Trading Commission
NOTICES
Meetings; Sunshine Act, 14428

Consumer Product Safety Commission
NOTICES
Settlement agreements:
Safety 1st, Inc., 14428–14429

Defense Department
See Army Department
NOTICES
Agency information collection activities:
Proposed collection; comment request, 14429–14430

Education Department
NOTICES
Agency information collection activities:
Submission for OMB review; comment request, 14431–14432

Energy Department
See Energy Research Office
See Federal Energy Regulatory Commission
NOTICES
Committees; establishment, renewal, termination, etc.:
Energy Advisory Board, 14432

Energy Research Office
NOTICES
Grants and cooperative agreements; availability, etc.:
Financial assistance programs—
Global climate change integrated assessment research program, 14432–14434
Natural and Accelerated Bioremediation Research Program, 14435–14439

Environmental Protection Agency
RULES
Air quality implementation plans; approval and promulgation; various States:
Colorado; correction, 14357–14360
Pesticides; tolerances in food, animal feeds, and raw agricultural commodities:
Imidacloprid, 14363–14378
Titanium dioxide, 14360–14363
PROPOSED RULES
Clean Air Act:
Federal and State operating permits programs; draft rules and accompanying information availability, 14392–14393
NOTICES
Pesticides; emergency exemptions, etc.:
Bifenthrin, 14458–14459
Carbofuran, 14459–14460

Pyriproxfen and buprofezin, 14460–14461
Pyriproxyfen and buprofezin, 14461–14462

Executive Office of the President
See Presidential Documents

Export Administration Bureau
NOTICES
Agency information collection activities:
Proposed collection; comment request, 14422

Federal Aviation Administration
RULES
Class D and E airspace; correction, 14344–14345
Class E airspace, 14345–14348
Class E airspace; correction, 14348–14349
PROPOSED RULES
Airworthiness directives:
British Aerospace, 14383–14385
Pilatus Aircraft, Ltd., 14385
Airworthiness standards:
Special conditions—
Boeing model 757-300 airplane, 14381–14383
Class E airspace, 14387–14390

Federal Communications Commission
NOTICES
Agency information collection activities:
Proposed collection; comment request, 14462
Reporting and recordkeeping requirements, 14463–14464

Federal Crop Insurance Corporation
RULES
Crop insurance regulations:
Fresh market tomatoes, etc., 14333–14334

Federal Energy Regulatory Commission
NOTICES
Environmental statements; availability, etc.:
Southern California Edison Co., 14457–14458
Hydroelectric applications, 14458
Applications, hearings, determinations, etc.:
Angle, George B., 14439–14440
ANR Pipeline Co., 14440
AOG Gas Transmission Co., L.P., 14440
Banks, Lee, 14440–14441
Benson Mineral Group, Inc., 14441–14443
Bone, Sally L., 14443–14444
California Power Exchange Corp., 14444
Cinergy Operating Co., 14445
Cove Point LNG L.P., 14445
El Paso Natural Gas Co., 14445
Gower, Mark A., 14445–14446
Graham-Michaelis Corp., 14446–14447
Helzel, Leo, 14447
Hummon Corp., 14447–14448
Kaiser-Francis Oil Co., 14448–14450
Kansas Petroleum, Inc., 14450–14451
Koch Gateway Pipeline Co., 14451
Midgard Energy Co., 14451–14452
Molz Oil Co., 14452–14453
Natural Gas Pipeline Co., 14453
Northern Natural Gas Co., 14453
Pickrell Drilling Co., Inc., 14453–14454
Quinque Oil & Gas Producing Co., 14454
Quinque Operating Co., 14454–14455
Raymond Oil Co., Inc., 14455–14456
Schwarzhoff, Dale, 14456–14457
Tennessee Gas Pipeline Co., 14457
Transok, L.L.C., 14457

Federal Maritime Commission
NOTICES
Agreements filed, etc., 14464
Freight forwarder licenses:
Sterling International Freight Forwarders et al., 14464

Federal Reserve System
RULES
Electronic fund transfers (Regulation E):
Disclosure requirements; delivery by electronic communication, 14528–14532
PROPOSED RULES
Consumer leasing (Regulation M):
Disclosure requirements; delivery by electronic communication, 14538–14548
Electronic fund transfers (Regulation E):
Point-of-sale debit card and foreign-initiated transactions; claims investigation extended time periods eliminated, 14555–14558
Equal credit opportunity (Regulation B):
Disclosure requirements; delivery by electronic communication, 14552–14555
Truth in lending (Regulation Z):
Disclosure requirements; delivery by electronic communication, 14548–14552
Truth in savings (Regulation DD):
Disclosure requirements; delivery by electronic communication, 14533–14538
NOTICES
Banks and bank holding companies:
Formations, acquisitions, and mergers, 14464–14465

Federal Service Impasses Panel
NOTICES
Agency information collection activities:
Proposed collection; comment request, 14465–14466

Federal Trade Commission
NOTICES
Prohibited trade practices:
Civic Development Group, Inc., et al., 14466–14468

Fish and Wildlife Service
RULES
Endangered and threatened species:
Mexican spotted owl, etc., 14378–14379
PROPOSED RULES
Endangered and threatened species:
Flatwoods salamander, 14414–14415
Migratory bird hunting:
Baiting and baited areas, 14415–14420
NOTICES
Endangered and threatened species permit applications, 14471–14472
Meetings:
Aquatic Nuisance Species Task Force, 14472
Klamath Fishery Management Council, 14472

Food and Drug Administration
RULES
Animal and human drugs:
Current good manufacturing practices—
Testing and approval or rejection of components, drug product containers, and closures; technical amendment, 14355–14356

Animal drugs, feeds, and related products:
New drug applications—
Bambermycins, 14356
Food for human consumption:
Food labeling—
Nutrient content claims; definition of term ''healthy'', 14349–14355
PROPOSED RULES
Food for human consumption:
Food labeling—
Sugars and sweets products category; candies reference amounts and serving sizes, 14390
Medical devices:
User medical devices and persons who refurbish, recondition, rebuild, service or remarket such devices; compliance policy guides review and revision, 14390–14391
NOTICES
Agency information collection activities:
Submission for OMB review; comment request, 14468–14470

Food and Nutrition Service
NOTICES
Agency information collection activities:
Proposed collection; comment request, 14421

Foreign-Trade Zones Board
NOTICES
Applications, hearings, determinations, etc.:
Pennsylvania
Bayer Corp.; aspirin products; correction, 14504

Health and Human Services Department
See Centers for Disease Control and Prevention
See Children and Families Administration
See Food and Drug Administration
See Health Care Financing Administration
See Inspector General Office, Health and Human Services Department

Health Care Financing Administration
See Inspector General Office, Health and Human Services Department
PROPOSED RULES
Medicare programs:
Medicare overpayment liability; ''Without fault'' and waiver of recovery from an individual, 14506–14526

Housing and Urban Development Department
NOTICES
Agency information collection activities:
Submission for OMB review; comment request, 14470–14471

Inspector General Office, Health and Human Services Department
PROPOSED RULES
Health care programs; fraud and abuse:
Health Insurance Portability and Accountability Act—
Civil monetary penalties; inflation adjustment, 14393–14402

Interior Department
See Fish and Wildlife Service
See Land Management Bureau
See Minerals Management Service
See Reclamation Bureau

Internal Revenue Service
PROPOSED RULES
Income taxes:
Qualified plans and individual retirement plans; required distributions; correction, 14391–14392

International Trade Administration
NOTICES
Antidumping:
Oil country tubular goods from—
Mexico, 14422–14423
Countervailing duties:
Steel wire rope from—
Thailand, 14423
Overseas trade missions:
Business development mission to Eastern Caribbean, 14423–14424
U.S. and Foreign Commercial Service; joint projects with commercial centers in Brazil, Indonesia and China, 14424–14426

International Trade Commission
NOTICES
Import investigations:
Lens-fitted film packages, 14474–14475
Steel wire rod from—
Canada et al., 14475–14476
Wheat gluten, 14476

Justice Department
NOTICES
Grants and cooperative agreements; availability, etc.:
Community oriented policing services; equipment and technology purchase and support services procurement, 14476–14477
Pollution control; consent judgments:
Hanlin Group, Inc., et al., 14477–14478
NL Industries et al., 14478
North Landing Line Construction Co. et al., 14478

Land Management Bureau
NOTICES
Meetings:
Resource advisory councils—
Eastern Washington, 14472–14473
Realty actions; sales, leases, etc.:
Oregon, 14473
Utah, 14473

Medicare Payment Advisory Commission
NOTICES
Meetings, 14478–14479

Minerals Management Service
NOTICES
Outer Continental Shelf operations:
Oil and gas lease sales—
Bid adequacy procedures modifications, 14473

National Credit Union Administration
RULES
Freedmon of Information Act and Privacy Act; implementation, 14336–14344

National Labor Relations Board
NOTICES
Meetings; Sunshine Act, 14479

National Oceanic and Atmospheric Administration
RULES
Fishery conservation and management:
Alaska; fisheries of Exclusive Economic Zone—
Pacific halibut, etc.; community development quota program, 14379–14380
NOTICES
Agency information collection activities:
Proposed collection; comment request, 14426
Fishery conservation and management:
Atlantic highly migratory species; comprehensive research and monitoring plan, 14427

Nuclear Regulatory Commission
PROPOSED RULES
Byproduct material; domestic licensing:
Regulatory, health, and radiation safety basis of licensing practices; clarification; withdrawn, 14381
NOTICES
Agency information collection activities:
Proposed collection; comment request, 14479
Environmental statements; availability, etc.:
Arizona Public Service Co., 14479–14481
Tennessee Valley Authority, 14481–14482
Operating licenses, amendments; no significant hazards considerations; biweeklynotices, 14482–14497
Privacy Act:
Systems of records, 14497–14500

Personnel Management Office
NOTICES
Personnel management demonstration projects:
Army Department—
U.S. Army Engineer Waterways Experiment Station, Vicksburg, MS; republication, 14580–14599

Presidential Documents
ADMINISTRATIVE ORDERS
Vietnam:
Export-Import Bank Act of 1945; purchase or lease of products or services, 14331
Trade Act of 1974; waiver (Presidential Determination No. 98-17 of March 9, 1998), 14329

Public Health Service
See Centers for Disease Control and Prevention
See Food and Drug Administration

Reclamation Bureau
NOTICES
Meetings:
Yakima River Basin Water Enhancement Project Conservation Advisory Group, 14474

Securities and Exchange Commission
NOTICES
Meetings; Sunshine Act, 14500

Small Business Administration
NOTICES
Applications, hearings, determinations, etc.:
BB&T Capital Partners, LLC, 14500
New England Partners Capital, L.P., 14501
Utah Ventures II, L.P., 14501

State Department
NOTICES
Agency information collection activities:
Proposed collection; comment request, 14501
Foreign Operations, Export Financing, and Related Programs Appropriations Act:
U.S. bilateral assistance to Federal Republic; waiver—
Srpska, 14502
Yugoslavia, 14502
Meetings:
International Telecommunications Advisory Committee, 14501

Surface Transportation Board
NOTICES
Rail carriers:
Cost recovery procedures—
Adjustment factor, 14502

Textile Agreements Implementation Committee
See Committee for the Implementation of Textile Agreements

Transportation Department
See Federal Aviation Administration
See Surface Transportation Board
PROPOSED RULES
Americans with Disabilities Act; implementation:
Accessibility guidelines—
Transportation for individuals with disabilities; over-the-road buses, 14560–14571
Accessibility guidelines for transportation vehicles—
Over-the-road buses, 14571–14578

Treasury Department
See Internal Revenue Service
RULES
National Security Information designations, 14356–14357
NOTICES
Organization, functions, and authority delegations:
Assistant Secretary for Management and Chief Financial Officer, 14502
Classification of national security information; original and derivative authority, 14502–14503

Separate Parts In This Issue

Part II
Department of Health and Human Services, Health Care Financing Administration, 14506–14526

Part III
Federal Reserve System, 14528–14558

Part IV
Department of Transportation, 14560–14578

Part V
Personnel Management Office, 14580–14599

Reader Aids
Consult the Reader Aids section at the end of this issue for phone numbers, online resources, finding aids, reminders, and notice of recently enacted public laws.

CFR PARTS AFFECTED IN THIS ISSUE

A cumulative list of the parts affected this month can be found in the Reader Aids section at the end of this issue.

3 CFR

Administrative Orders:

Presidential Determinations:

No. 98–17 of March 9, 1998 14329

No. 98–18 of March 9, 1998 14331

7 CFR

401....14333
454....14333
457....14333
985....14333

9 CFR

78....14335

10 CFR

Proposed Rules:

33....14381

12 CFR

205....14528
792....14336

Proposed Rules:

202....14552
205....14555
213....14538
226....14548
230....14533

14 CFR

71 (8 documents) 14344, 14345, 14346, 14347, 14348

Proposed Rules:

25....14381
39 (2 documents) 14383, 14385
71 (2 documents) 14387, 14388

21 CFR

101....14349
211....14355
558....14356

Proposed Rules:

101....14390
801....14390
803....14390
804....14390
806....14390
807....14390
810....14390
820....14390
821....14390
1002....14390
1020....14390

26 CFR

Proposed Rules:

1....14391

31 CFR

2....14356

36 CFR

Proposed Rules:

1192....14571

40 CFR

52....14357
180 (3 documents) 14360, 14363, 14371

Proposed Rules:

70....14392

42 CFR

Proposed Rules:

401....14506
403....14506
405....14506
410....14506
411....14506
413....14506
447....14506
466....14506
473....14506
493....14506
1003....14393
1005....14393
1006....14393

45 CFR

Proposed Rules:

302....14402
304....14402
307....14402

49 CFR

Proposed Rules:

37....14560
38....14571

50 CFR

17....14378
679....14379

Proposed Rules:

17....14414
20....14415

Federal Register
Vol. 63, No. 57
Wednesday, March 25, 1998

Presidential Documents

Title 3—

The President

Presidential Determination No. 98–17 of March 9, 1998

Presidential Determination on Section 402(c)(2)(A) of the Trade Act of 1974—Vietnam

Memorandum for the Secretary of State

Pursuant to section 402(c)(2)(A) of the Trade Act of 1974 (Public Law 93–618, January 3, 1975; 88 Stat. 1978, 19 U.S.C. 2432(c)(2)(A)) as amended (the ''Act''), I determine that a waiver by Executive order of the application of subsections (a) and (b) of section 402 of the Act with respect to Vietnam will substantially promote the objectives of section 402.

You are authorized and directed to publish this determination in the **Federal Register**.

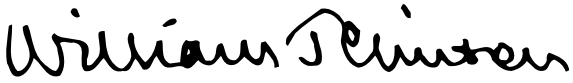

THE WHITE HOUSE,
Washington, March 9, 1998.

[FR Doc. 98–7995
Filed 3–24–98; 8:45 am]
Billing code 4710–10–F

Presidential Documents

Presidential Determination No. 98–18 of March 9, 1998

Presidential Determination Under Subsection 2(b)(2)(D) of the Export-Import Bank Act of 1945, as Amended—Vietnam

Memorandum for the Secretary of State

Pursuant to subsection 2(b)(2)(D) of the Export-Import Bank Act of 1945, as amended, I determine that it is in the national interest for the Export-Import Bank of the United States to guarantee, insure, extend credit, and participate in the extension of credit in connection with the purchase or lease of any product or service by, for use in, or for sale or lease to Vietnam.

You are authorized and directed to report this determination to the Congress and publish it in the **Federal Register.**

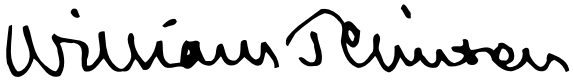

THE WHITE HOUSE,
Washington, March 9, 1998.

[FR Doc. 98–7996
Filed 3–24–98; 8:45 am]
Billing code 4710–10–F

Rules and Regulations

Federal Register

Vol. 63, No. 57

Wednesday, March 25, 1998

This section of the FEDERAL REGISTER contains regulatory documents having general applicability and legal effect, most of which are keyed to and codified in the Code of Federal Regulations, which is published under 50 titles pursuant to 44 U.S.C. 1510.

The Code of Federal Regulations is sold by the Superintendent of Documents. Prices of new books are listed in the first FEDERAL REGISTER issue of each week.

DEPARTMENT OF AGRICULTURE

Federal Crop Insurance Corporation

7 CFR Parts 401, 454, and 457

General Crop Insurance Regulations, Various Endorsements; Fresh Market Tomato (Guaranteed Production Plan) Crop Insurance Regulations; and Common Crop Insurance Regulations, Various Crop Insurance Provisions

AGENCY: Federal Crop Insurance Corporation, USDA.

ACTION: Final rule.

SUMMARY: The Federal Crop Insurance Corporation (FCIC) adopts regulations for the General Crop Insurance Regulations; Canning and Processing Tomato and Rice Endorsements; Fresh Market Tomato (Guaranteed Production Plan) Crop Insurance Regulations; and the Common Crop Insurance Regulations, Cotton, Coarse Grains (Corn, Grain Sorghum, and Soybeans), Dry Bean, ELS Cotton, Sugar Beet, and Sunflower Seed Crop Insurance Provisions, effective for the 1998 crop year only, for counties and states with a November 30 contract change date. The intended effect of this action is to extend the contract change date to December 17, 1997.

EFFECTIVE DATE: This rule was effective November 26, 1997.

FOR FURTHER INFORMATION CONTACT: Louise Narber, Insurance Management Specialist, Research and Development, Product Development Division, Federal Crop Insurance Corporation, United States Department of Agriculture, 9435 Holmes Road, Kansas City, MO 64131, telephone (816) 926–7730.

SUPPLEMENTARY INFORMATION:

Executive Order 12866

The Office of Management and Budget (OMB) determined this rule to be not significant for the purposes of Executive Order 12866 and, therefore, this rule has not been reviewed by OMB.

Paperwork Reduction Act of 1995

Under the provisions of the Paperwork Reduction Act of 1995 (44 U.S.C. chapter 35), there are no information collection requirements contained in this rule.

Unfunded Mandates Reform Act of 1995

Title II of the Unfunded Mandates Reform Act of 1995 (UMRA), Pub. L.104–4, establishes requirements for Federal agencies to assess the effects of their regulatory actions on State, local, and tribal governments or the private sector. This rule contains no Federal mandates (under the regulatory provisions of title II of the UMRA) for State, local, and tribal governments or the private sector. Therefore, this rule is not subject to the requirements of sections 202 and 205 of the UMRA.

Executive Order 12612

It has been determined under section 6(a) of Executive Order 12612, Federalism, that this rule does not have sufficient federalism implications to warrant the preparation of a Federalism Assessment. The provisions contained in this rule will not have a substantial direct effect on States or their political subdivisions or on the distribution of power and responsibilities among the various levels of government.

Regulatory Flexibility Act

This regulation will not have a significant economic impact on a substantial number of small entities. The extended contract change date included in this rule will not impact small entities to a greater extent than large entities. Under the current regulations, FCIC is required to have changes in policy provisions at the agent's office by November 30. If this date is not met, then the changes will not be applicable until the next crop year. The administrative process has delayed the implementation of the 1998 prevented planting and other policy changes intended to simplify and streamline the process. This regulation merely extended that date so that insurance companies and producers can receive the benefit of these changes in the 1998 crop year. The amount of work required of insurance companies delivering and servicing these policies will not increase significantly from the amount of work currently required. This rule does not have any greater or lesser impact on the producer. Therefore, this action is determined to be exempt from the provisions of the Regulatory Flexibility Act (5 U.S.C. 605), and no Regulatory Flexibility Analysis was prepared.

Federal Assistance Program

This program is listed in the Catalog of Federal Domestic Assistance under No. 10.450.

Executive Order 12372

This program is not subject to the provisions of Executive Order 12372, which require intergovernmental consultation with State and local officials. See the Notice related to 7 CFR part 3015, subpart V, published at 48 FR 29115, June 24, 1983.

Executive Order 12988

This rule has been reviewed in accordance with Executive Order 12988 on civil justice reform. This rule was published as an interim rule effective November 26, 1997. The rule was in the agents office by November 30, 1997, so as to be effective for the 1998 crop year. The provisions of this rule will not have retroactive effect prior to November 26, 1997. The provisions of this rule will preempt State and local laws to the extent such State and local laws are inconsistent herewith. The administrative appeal provisions published at 7 CFR part 11 must be exhausted before action against FCIC for judicial review may be brought.

Environmental Evaluation

This action is not expected to have a significant impact on the quality of the human environment, health, and safety. Therefore, neither an Environmental Assessment nor an Environmental Impact Statement is needed.

National Performance Review

This regulatory action is being taken as part of the National Performance Review Initiative to eliminate unnecessary or duplicative regulations and improve those that remain in force.

Background

On Tuesday, December 2, 1997, FCIC published an interim rule in the **Federal Register** at 62 FR 63631 to amend the General Crop Insurance Regulations,

Various Endorsements; Fresh Market Tomato (Guaranteed Production Plan) Crop Insurance Regulations; and Common Crop Insurance Regulations, Various Crop Insurance Provisions by extending the contract change date for certain 1998 spring crop counties and States. Since this rule benefited the insured and insurance companies by improving coverage and simplifying and streamlining the policies, good cause was found to make the interim rule effective November 26, 1997, the date the interim rule was placed on file for public inspection at the office at the **Federal Register**.

Following publication of the interim rule, the public was afforded 27 days to submit written comments and opinions. Comments were received from a reinsured company and legal counsel for a reinsured company. The comments and FCIC's responses are as follows:

Comment: A reinsured company and legal counsel for a reinsured company stated that FCIC's inability to propose and promulgate timely changes in its regulations will adversely affect the reinsured companies and their policyholders. Since the first crops affected by the rule have a sales closing date of January 15, 1998, the commenters state that there is not sufficient time for the companies to understand the changes in the twelve policies FCIC has proposed to change, train the trainers, have the trainers train the agents, have the agents explain these changes to their insureds, and then to permit the insureds to complete the reports required of them in a timely and accurate manner. Also, when the insureds are late receiving the crop insurance changes, it interrupts and delays their planning and decisions. Receiving these changes late contributes to more obstacles to be overcome by program providers and agents as opposed to the mandate and goal of simplification. One of the commenters expects FCIC to hold the reinsured company harmless for the consequences of FCIC's errors and omissions. This commenter also stated that the reinsured company reserves the right to accept, without penalty, late filed applications, written agreements, acreage reports and any other document that requires a belated amendment as a result of the FCIC's delay regardless of whether the sales closing date is extended. The commenter also stated that the reinsured company reserves the right to challenge the legality of the FCIC's interim rule and final rule.

Response: It was crucial that better late and prevented planting coverage be developed and implemented for the 1998 crop year. FCIC spent months working with producers, farm organizations, commodity groups, reinsured companies, an insurance service organization, and agents to develop simplified prevented planting provisions that: (1) Would protect producers when crops were prevented from being planted by an insurable cause of loss, (2) would be actuarially sound, (3) reinsured companies could quickly develop training plans to present to employees and agents, and (4) would be simple enough for agents to explain to the producers in a limited time frame. FCIC determined that its efforts were successful and that neither insureds nor reinsured companies would be adversely affected by extension of the contract change date. The sales closing date of January 15, 1998, which is the first sales closing date for the 1998 crop year, is only applicable to a few counties and crops and few insureds were affected by the contract change date extension. With respect to the sales closing date, neither the Manager or any reinsured company has the authority to extend the sales closing date. Further, nothing in the rule or the time of its implementation should require any sales closing date extensions. Late filed documents may only be accepted in accordance with applicable regulations and FCIC approved procedures. If FCIC extends the contract change date and the reinsured company does not feel prepared to sell a policy prior to the sales closing date, then the company should not sell the policy and the applicant should be advised to find another agent. Therefore, no change has been made and the interim rule as published on December 2, 1997, at 62 FR 63631 is adopted as a final rule.

List of Subjects

7 CFR Part 401

Crop insurance, Canning and processing tomato, Rice.

7 CFR Part 454

Crop insurance, Fresh market tomato (guaranteed production plan).

7 CFR Part 457

Crop insurance, Cotton, Coarse grains (corn, grain sorghum, and soybeans), Dry bean, ELS cotton, Sugar beet, Sunflower seed.

PART 457—[AMENDED]

The authority citation for 7 CFR part 457 continues to read as follows:

Authority: 7 USC 1506(1), 1506(p).

Final Rule

Accordingly, for the reasons set forth in the preamble, the Federal Crop Insurance Corporation adopts as a final rule, the interim rule as published at 62 FR 63631 on December 2, 1997.

Signed in Washington, D.C., on March 18, 1998.

Kenneth D. Ackerman,

Manager, Federal Crop Insurance Corporation.

[FR Doc. 98–7735 Filed 3–24–98; 8:45 am]

BILLING CODE 3410–08–P

DEPARTMENT OF AGRICULTURE

Agricultural Marketing Service

7 CFR Part 985

[Docket No. FV98–985–1 FRC]

Marketing Order Regulating the Handling of Spearmint Oil Produced in the Far West; Salable Quantities and Allotment Percentages for the 1998–99 Marketing Year; Correction

AGENCY: Agricultural Marketing Service, USDA.

ACTION: Final rule; correction.

SUMMARY: The Agricultural Marketing Service, USDA, published in the **Federal Register** of February 20, 1998, a document establishing the quantity of spearmint oil produced in the Far West, by class, that handlers may purchase from, or handle for, producers during the 1998–99 marketing year. The 1998–99 marketing year covers the period June 1 through May 31. This document corrects an error in the **EFFECTIVE DATES** caption of that rule.

EFFECTIVE DATE: March 26, 1998.

FOR FURTHER INFORMATION CONTACT: George J. Kelhart, Marketing Order Administration Branch, Fruit and Vegetable Programs, AMS, USDA, room 2525–S, P.O. Box 96456, Washington, DC 20090–6456; telephone: 202–720–2491.

SUPPLEMENTARY INFORMATION: In rule FR Doc. 98–4036 published on February 20, 1998 (63 FR 8559), make the following correction. On page 8559, in the first column, under **EFFECTIVE DATES** the dates ''June 1, 1998, through May 30, 1999'' are corrected to read ''June 1, 1998, through May 31, 1999.''

Dated: March 19, 1998.

Robert C. Keeney,

Deputy Administrator, Fruit and Vegetable Programs.

[FR Doc. 98–7734 Filed 3–24–98; 8:45 am]

BILLING CODE 3410–02–P

DEPARTMENT OF AGRICULTURE

Animal and Plant Health Inspection Service

9 CFR Part 78

[Docket No. 98–014–1]

Brucellosis in Cattle; State and Area Classifications; Florida

AGENCY: Animal and Plant Health Inspection Service, USDA.

ACTION: Interim rule and request for comments.

SUMMARY: We are amending the brucellosis regulations concerning the interstate movement of cattle by changing the classification of Florida from Class A to Class Free. We have determined that Florida meets the standards for Class Free status. This action relieves certain restrictions on the interstate movement of cattle from Florida.

DATES: Interim rule effective March 25, 1998. Consideration will be given only to comments received on or before May 26, 1998.

ADDRESSES: Please send an original and three copies of your comments to Docket No. 98–014–1, Regulatory Analysis and Development, PPD, APHIS, Suite 3C03, 4700 River Road Unit 118, Riverdale, MD 20737–1238. Please state that your comments refer to Docket No. 98–014–1. Comments received may be inspected at USDA, room 1141, South Building, 14th Street and Independence Avenue, SW., Washington, DC, between 8 a.m. and 4:30 p.m., Monday through Friday, except holidays. Persons wishing to inspect comments are requested to call ahead on (202) 690–2817 to facilitate entry into the comment reading room.

FOR FURTHER INFORMATION CONTACT: Dr. R.T. Rollo, Jr., Staff Veterinarian, National Animal Health Programs, VS, APHIS, 4700 River Road Unit 43, Riverdale, MD 20737–1231, (301) 734–7709; or e-mail: rrollo@aphis.usda.gov.

SUPPLEMENTARY INFORMATION:

Background

Brucellosis is a contagious disease affecting animals and humans, caused by bacteria of the genus *Brucella*.

The brucellosis regulations, contained in 9 CFR part 78 (referred to below as the regulations), provide a system for classifying States or portions of States according to the rate of *Brucella* infection present, and the general effectiveness of a brucellosis control and eradication program. The classifications are Class Free, Class A, Class B, and Class C. States or areas that do not meet the minimum standards for Class C are required to be placed under Federal quarantine.

The brucellosis Class Free classification is based on a finding of no known brucellosis in cattle for the 12 months preceding classification as Class Free. The Class C classification is for States or areas with the highest rate of brucellosis. Class B and Class A fall between these two extremes. Restrictions on moving cattle interstate become less stringent as a State approaches or achieves Class Free status.

The standards for the different classifications of States or areas entail (1) maintaining a cattle herd infection rate not to exceed a stated level during 12 consecutive months; (2) tracing back to the farm of origin and successfully closing a stated percent of all brucellosis reactors found in the course of Market Cattle Identification (MCI) testing; (3) maintaining a surveillance system that includes testing of dairy herds, participation of all recognized slaughtering establishments in the MCI program, identification and monitoring of herds at high risk of infection (including herds adjacent to infected herds and herds from which infected animals have been sold or received), and having an individual herd plan in effect within a stated number of days after the herd owner is notified of the finding of brucellosis in a herd he or she owns; and (4) maintaining minimum procedural standards for administering the program.

Before the effective date of this interim rule, Florida was classified as a Class A State.

To attain and maintain Class Free status, a State or area must (1) remain free from field strain *Brucella abortus* infection for 12 consecutive months or longer; (2) trace back at least 90 percent of all brucellosis reactors found in the course of MCI testing to the farm of origin; (3) successfully close at least 95 percent of the MCI reactor cases traced to the farm of origin during the 12 consecutive month period immediately prior to the most recent anniversary of the date the State or area was classified Class Free; and (4) have a specified surveillance system, as described above, including an approved individual herd plan in effect within 15 days of locating the source herd or recipient herd.

After reviewing the brucellosis program records for Florida, we have concluded that this State meets the standards for Class Free status. Therefore, we are removing Florida from the list of Class A States in § 78.41(b) and adding it to the list of Class Free States in § 78.41(a). This action relieves certain restrictions on moving cattle interstate from Florida.

Immediate Action

The Administrator of the Animal and Plant Health Inspection Service has determined that there is good cause for publishing this interim rule without prior opportunity for public comment. Immediate action is warranted to remove unnecessary restrictions on the interstate movement of cattle from Florida.

Because prior notice and other public procedures with respect to this action are impracticable and contrary to the public interest under these conditions, we find good cause under 5 U.S.C. 553 to make it effective upon publication in the **Federal Register**. We will consider comments that are received within 60 days of publication of this rule in the **Federal Register**. After the comment period closes, we will publish another document in the **Federal Register**. It will include a discussion of any comments we receive and any amendments we are making to the rule as a result of the comments.

Executive Order 12866 and Regulatory Flexibility Act

This rule has been reviewed under Executive Order 12866. For this action, the Office of Management and Budget has waived its review process required by Executive Order 12866.

Cattle moved interstate are moved for slaughter, for use as breeding stock, or for feeding. Changing the brucellosis status of Florida from Class A to Class Free will promote economic growth by reducing certain testing and other requirements governing the interstate movement of cattle from this State. Testing requirements for cattle moved interstate for immediate slaughter or to quarantined feedlots are not affected by this change. Cattle from certified brucellosis-free herds moving interstate are not affected by this change.

The groups affected by this action will be herd owners in Florida, as well as buyers and importers of cattle from this State.

There are an estimated 20,000 cattle herds in Florida that will be affected by this rule. All of these are owned by small entities. Test-eligible cattle offered for sale interstate from other than certified-free herds must have a negative test under present Class A status regulations, but not under regulations concerning Class Free status. If such testing were distributed equally among all animals affected by this rule, Class Free status would save approximately $4 per head.

Therefore, we believe that changing the brucellosis status of Florida will not have a significant economic impact on the small entities affected by this interim rule.

Under these circumstances, the Administrator of the Animal and Plant Health Inspection Service has determined that this action will not have a significant economic impact on a substantial number of small entities.

Executive Order 12372

This program/activity is listed in the Catalog of Federal Domestic Assistance under No. 10.025 and is subject to Executive Order 12372, which requires intergovernmental consultation with State and local officials. (See 7 CFR part 3015, subpart V.)

Executive Order 12988

This rule has been reviewed under Executive Order 12988, Civil Justice Reform. This rule: (1) Preempts all State and local laws and regulations that are in conflict with this rule; (2) has no retroactive effect; and (3) does not require administrative proceedings before parties may file suit in court challenging this rule.

Paperwork Reduction Act

This document contains no information collection or recordkeeping requirements under the Paperwork Reduction Act of 1995 (44 U.S.C. 3501 *et seq.*).

List of Subjects in 9 CFR Part 78

Animal diseases, Bison, Cattle, Hogs, Quarantine, Reporting and recordkeeping requirements, Transportation.

Accordingly, 9 CFR part 78 is amended as follows:

PART 78—BRUCELLOSIS

1. The authority citation for part 78 continues to read as follows:

Authority: 21 U.S.C. 111–114a–1, 114g, 115, 117, 120, 121, 123–126, 134b, and 134f; 7 CFR 2.22, 2.80, and 371.2(d). 78.41 [Amended]

§ 78.41 [Amended]

2. In § 78.41, paragraph (a) is amended by adding ''Florida,'' immediately after ''Delaware,'' and paragraph (b) is amended by removing ''Florida,''.

Done in Washington, DC, this 20th day of March 1998.

Terry L. Medley,

Administrator, Animal and Plant Health Inspection Service.

[FR Doc. 98–7718 Filed 3–24–98; 8:45 am]

BILLING CODE 3410–34–P

NATIONAL CREDIT UNION ADMINISTRATION

12 CFR PART 792

The Freedom of Information Act and Privacy Act

AGENCY: National Credit Union Administration (NCUA).

ACTION: Final rule.

SUMMARY: NCUA is revising its regulations governing the disclosure of information under the Freedom of Information Act (FOIA) to reflect recent changes to FOIA brought about by the enactment of the Electronic Freedom of Information Act Amendments of 1996 (E–FOIA). The revised regulation sets forth new procedures NCUA will employ to implement provisions of E–FOIA, such as expedited treatment of requests and multi-track processing. The rule also clarifies the information that must be included in FOIA requests so that NCUA can process them. Other changes to the rule provide guidance to the public on how to obtain records contained in the files of the Office of Inspector General. A change to the fee provision reflects a recalculation of the agency's duplication costs.

DATES: This regulation is effective April 24, 1998.

FOR FURTHER INFORMATION CONTACT: Dianne Salva, Staff Attorney, or Sheila Albin, Associate General Counsel, (703) 518–6540.

SUPPLEMENTARY INFORMATION:

Background

On October 2, 1996, the President signed into law the Electronic Freedom of Information Act Amendments of 1996, Public Law 104–231. E-FOIA has twin goals of making records contained in government files more easily accessible to the public and improving administration of FOIA programs in the agencies. In particular, Congress moved to amend the FOIA because it found that government agencies were increasingly using computers to conduct agency business and store valuable agency records and information. In recognition of the vast amount of information the government maintains in electronic format, E–FOIA was designed to ensure continued public access to government information, including that maintained in electronic format. This final rule revises the NCUA's information disclosure regulations, 12 CFR part 792, to comply with E–FOIA.

On November 13, 1997, NCUA published a proposed rule, (62 FR 60799), and, in response, received five comments from the public. The comments received generally supported the proposal. Several commenters applauded the breadth of information available on the NCUA website, but also asked that NCUA consider expanding the categories of information available on the website and emphasized the need to update the website information expeditiously. NCUA has a wide variety of records on its website and more information is added regularly. One commenter asked that information on the website be made available in various electronic formats. These comments have been forwarded to the NCUA staff responsible for maintenance of the website for consideration.

One commenter expressed confusion over the mechanics of the multi-track system. NCUA believes that a multi-track processing system is the most efficient and fair way to process FOIA requests. If requests were processed on a strict first-in first-out basis, a request that could be easily answered, such as one for a press release, would be processed only after an earlier-received, complex request requiring extensive search and review. Accordingly, the multi-track system remains incorporated in this final rule. One commenter expressed confusion over the interaction between the treatment of an expedited request and the multi-track processing system, as well as the standards that will be applied to determine to which track a request is assigned. To address such confusion, NCUA's final rule clarifies that the multi-track system includes a fast track, an expedited track and a regular track. The types of requests that will enter the fast track are described in the proposal as those that seek records which are readily identifiable or have already been cleared for public release. In general, requests placed on the fast track will be those seeking records that are not voluminous and do not require extensive review to determine the applicability of any FOIA exemptions. The commenter asked that NCUA explain, by example, what type of records would meet that standard. Generally speaking, records that will qualify for the fast track will be those that have previously been released publicly by NCUA under FOIA, and that can be quickly located at the Information Center handling the request. Examples of such documents include NCUA letters to credit unions, reports to Congress, call report data as available on the NCUA website or listings of credit unions in a geographical area.

NCUA received four comments suggesting that it establish a specific time limit for processing requests under the multi-track or expedited processing

systems. NCUA carefully considered the comments concerning setting specific time frames for fast track or expedited requests. The procedure for the multi-track system will be that, when a request is received, the Information Center will review it and determine which track it should enter. Requests within each track will generally be processed according to their date of receipt. This should result in the greatest number of requests being completed in the least amount of time. Furthermore, we reviewed other agencies' final regulations implementing E–FOIA and found that no other agency has elected to assign a time frame of less than 20 days for response to requests in any track of a multi-track system. NCUA is aware that some requests may not easily be categorized, or may appear to qualify for the fast track initially, but be determined to be more complex once the processing is underway. For these reasons, it was determined that no specific time frames, other than those set forth in the statute, should be adopted in the final rule.

One commenter suggested that NCUA establish an electronic form for filing FOIA requests from its website, and another asked that NCUA identify an e-mail address and fax numbers for submitting requests. Since FOIA requests may be submitted to NCUA's Central Office or any of its six regional offices, a list of fax numbers in the rule would be cumbersome, but an e-mail address has been added. NCUA is currently planning to devote space in its website to E–FOIA, and will take the remaining comments into consideration in developing that space.

New Provisions

Section 792.02 now reflects the additional category of records NCUA will make publicly available for inspection and copying: records released under FOIA after March 31, 1997, which the agency determines have become or are likely to become the subject of subsequent requests.

Section 792.03 sets forth the indices of records made available for public inspection and copying and includes the additional index of popular FOIA responses.

Section 792.04 informs the public that certain records created by NCUA after November 1, 1996 are also available on the NCUA website.

Section 792.06 clarifies that records maintained in electronic format are subject to FOIA.

Section 792.07 identifies the places within NCUA where the public may write to request records. The Office of Inspector General has been added to reflect that the NCUA Board has delegated authority to the Inspector General to respond to initial FOIA requests for records contained in Office of Inspector General files.

Sections 792.08 and 792.09 clarify administrative requirements and procedures for submitting FOIA requests. To improve communications between the agency and requesters, requesters are instructed to include their name, address and telephone number with their request. In recognition of the new requirement that agencies honor form or format requests, requesters are also asked to designate their form or format of choice, if other than paper copy, at the time they make their request.

Section 792.10 sets forth the procedures for the multi-track processing system comprised of a fast track, expedited track and regular track. Fast track processing will apply to records that are easily identifiable by NCUA staff and have been previously cleared for release to the public. Fast track requests will be handled as expeditiously as possible in the order they are received. Requests will be placed on the expedited track if the requester meets the requirements for expedited treatment set forth in § 792.18. All information requests that do not meet the fast track or expedited track processing standards will be handled under regular processing procedures. A requester who desires fast track processing, but whose request does not meet those standards, may contact the NCUA to try to narrow the scope of the request so that it will qualify for fast track processing.

Section 792.12 was added to inform requesters that, as long as it is technically feasible and would not harm an interest that a FOIA exemption is intended to protect, NCUA will indicate where, why and how much information was withheld from its response.

Section 792.13 was added to advise requesters that they may obtain information in any readily reproducible form or format they request. It also clarifies that only one copy of a record will be produced.

Section 792.15 sets forth the new processing time limit of 20 working days in place of the prior 10 working days. It also sets forth the two exceptions to the 20 working day time limit: the suspension of time for the payment of fees or if unusual circumstances exist.

Section 792.16 describes the criteria for determining whether unusual circumstances exist. The criteria have not changed. The regulation contains a new provision on aggregating multiple requests which, together, cause unusual circumstances to exist. NCUA will now aggregate multiple requests from the same requester or group of requesters acting in concert, if it believes they constitute a single request, and if, taken together, the requests satisfy the unusual circumstances criteria. This section also contains a new provision advising requesters that, if NCUA sends them a notice extending the processing time due to unusual circumstances, it will also tell them that they may reduce the scope of their request so that it can be processed within the statutory time frame or agree to an alternative time frame.

Section 792.18 has been added to implement the expedited processing provision of E–FOIA. It sets forth the criteria for a requester seeking to establish a compelling need to support a request for expedited processing. E-FOIA permits two categories of requests involving compelling needs to be granted expedited treatment: Those that entail an imminent threat to the life or physical safety of an individual or those that are filed by persons primarily engaged in disseminating information and involve an urgency to inform the public concerning actual or alleged government activity. For ease of administration and consistency, the proposed rule uses the term ''representative of the news media'' to describe a person primarily engaged in disseminating information, because the term has been used for many years in other provisions of the regulation and is familiar to the public and agency staff. In keeping with Congress' express intent that the specified criteria for compelling need be narrowly applied, expedited processing will only be granted in those extraordinary cases meeting the specific requirements of the regulation. H.R. Rep. 795, 104th Cong., 2d Sess. 26 (1996). As the legislative history states, ''the expedited process procedure is intended to be limited to circumstances in which a delay in obtaining information can reasonably be foreseen to cause a significant adverse consequence to a recognized interest.'' *Id.* To meet the criterion of an urgency to inform the public concerning an actual or alleged federal government activity, the requester must show that a delay in the release of the information would compromise a significant recognized interest, and that the requested information pertains to a matter of current exigency to the American public. This section also informs the public of the right of appeal for denial of a request for expedited processing.

Section 792.19 has been amended to reflect that the current fee schedule is available on the NCUA website. It has also been amended to reflect a new duplication rate. The current regulation sets out that searches for records responsive to a FOIA request will be conducted by computer using existing programming. The final rule strikes the reference to existing programming and adds language to say that no modification of existing programming or system will be made if it would significantly interfere with the operation of an NCUA automated information system.

Section 792.28 clarifies that appeals are permitted when NCUA denies a request for a fee waiver or reduction.

Regulatory Procedures

Regulatory Flexibility Act

The Regulatory Flexibility Act requires the NCUA to prepare an analysis to describe any significant economic impact any proposed regulation may have on a substantial number of small credit unions, meaning those under $1 million in assets. The NCUA Board has determined and certifies that the rule will not have a significant economic impact on a substantial number of small credit unions. The rule simplifies some of the procedures regarding the release of information and requires disclosure of information in certain instances in accordance with law. The disclosure requirements are imposed on the NCUA, therefore, they should not have a significant economic impact on a substantial number of small credit unions.

Paperwork Reduction Act Analysis

These regulations will impose no additional information collection, reporting or record keeping requirements subject to the approval of the Office of Management and Budget pursuant to the Paperwork Reduction Act of 1995, 44 U.S.C. 3501, *et seq.*

Executive Order 12,612

The NCUA Board certifies that the rule will not have a substantial direct effect on the States, on the relationship between the national government and the States, or on the distribution of power and responsibilities among various levels of government.

Small Business Regulatory Enforcement Fairness Act

The Small Business Regulatory Enforcement Fairness Act of 1996 (SBREFA) (Pub. L. 104–121) provides generally for congressional review of agency rules. The reporting requirement is triggered when a final rule is issued. The rule has been submitted to OMB for determination of whether this final rule constitutes a major rule as defined under the statute. A major rule is one that OMB finds has resulted in or is likely to result in: (1) An annual effect on the economy of $100 million or more; (2) a major increase in costs or prices for consumers, individuals, industries, federal state or local government agencies or geographic regions; or (3) significant adverse effects on competition, employment, investment, productivity, innovation, or the ability of United States based enterprises to compete with foreign based enterprises in domestic and export markets. OMB has determined that this rule is not a major rule.

List of Subjects in 12 CFR Part 792

Administrative practice and procedure, Credit unions, Confidential business information, Freedom of Information Act, Privacy Act.

By the National Credit Union Administration Board on March 19, 1998.

Becky Baker,

Secretary of the Board.

For the reasons set forth in the preamble, NCUA amends 12 CFR part 792 as follows:

PART 792—[AMENDED]

1. The authority citation for part 792 is revised to read as follows:

Authority: 5 U.S.C. 301, 552, 552a, 552b; 12 U.S.C. 1752a(d), 1766, 1789, 1795f; E.O. 12600, 52 FR 23781, 3 CFR, 1987 Comp., p. 235; E.O. 12958, 60 FR 19825, 3 CFR, 1995 Comp., p.333.

§§ 792.20—792.37 (Subpart B) [Redesignated as Subpart E (§§ 792.52—792.69)]

2. Redesignate subpart B (792.20–792.37) as subpart E (792.52–792.69) and reserve subpart B.

3. Revise subpart A of part 792 to read as follows:

Subpart A—The Freedom of Information Act

General Purpose

Sec.
792.01 What What is the purpose of this subpart?

Records Publicly Available

792.02 What records does NCUA make available to the public for inspection and copying?
792.03 How will I know which records to request?
792.04 How can I obtain these records?
792.05 What is the significance of records made available and indexed?

Records Available Upon Request

792.06 Can I obtain other records?
792.07 Where do I send my request?
792.08 What must I include in my request?
792.09 What if my request does not meet the requirements of this subpart?
792.10 What will NCUA do with my request?
792.11 What kind of records are exempt from public disclosure?
792.12 How will I know what records NCUA has determined to be exempt?
792.13 Can I get the records in different forms or formats?
792.14 Who is responsible for responding to my request?
792.15 How long will it take to process my request?
792.16 What unusual circumstances can delay NCUA's response?
792.17 What can I do if the time limit passes and I still have not received response?

Expedited Processing

792.18 What if my request is urgent and I cannot wait for the records?

Fees

792.19 How does NCUA calculate the fees for processing my request?
792.20 What are the charges for each fee category?
792.21 Will NCUA provide a fee estimate?
792.22 What will NCUA charge for other services?
792.23 Can I avoid charges by sending multiple, small requests?
792.24 Can NCUA charge me interest if I fail to pay my bill?
792.25 Will NCUA charge me if the records are not found or are determined to be exempt?
792.26 Will I be asked to pay fees in advance?

Fee Waiver or Reduction

792.27 Can fees be reduced or waived?

Appeals

792.28 What if I am not satisfied with the response I receive?

Submitter Notice

792.29 If I send NCUA confidential commercial information, can it be disclosed under FOIA?

Release of Exempt Records

792.30 Is there a prohibition against disclosure of exempt records?
792.31 Can exempt records be disclosed to credit unions, financial institutions and state or federal agencies?
792.32 Can exempt records be disclosed to investigatory agencies?

Subpart A—The Freedom of Information Act

General Purpose

§ 792.01 What is the purpose of this subpart?

This subpart describes the procedures you must follow to obtain records from NCUA under the Freedom of Information Act (FOIA), (5 U.S.C. 552).

Records Publicly Available

§ 792.02 What records does NCUA make available to the public for inspection and copying?

Except for records that are exempt from public disclosure under FOIA as amended (5 U.S.C. 552) or are promptly published and copies are available for purchase, NCUA routinely makes the following five types of records available for you to inspect and copy:

(a) Final opinions, including concurring and dissenting opinions, and orders made in the adjudication of cases;

(b) Statements of policy and interpretations which have been adopted by the agency but not published in the **Federal Register**;

(c) Administrative staff manuals and instructions to staff that affect a member of the public;

(d) Copies of all records, regardless of form or format, which have been released after March 31, 1997, in response to a FOIA request and which, because of the nature of their subject matter, NCUA determines have been or are likely to become the subject of subsequent requests; and

(e) Indices of the documents referred to in this paragraph.

§ 792.03 How will I know which records to request?

NCUA maintains current indices providing identifying information for the public for any matter referred to in § 792.02, issued, adopted, or promulgated after July 4, 1967. The listing of material in an index is for the convenience of possible users and does not constitute a determination that all of the items listed will be disclosed. NCUA has determined that publication of the indices is unnecessary and impractical. You may obtain copies of indices by making a request to the Office of Administration, at NCUA, 1775 Duke Street, Alexandria, VA 22314–2387 or, as indicated, on the NCUA web site. The indices are available for public inspection and copying and are provided at their duplication cost. The indices are:

(a) NCUA Publications List: Manuals relating to general and technical information, booklets published by NCUA, and the Credit Union Directory. The NCUA Publications list is available on the NCUA web site.

(b) Directives Control Index: A list of statements of policy, NCUA Instructions, Bulletins, Letters to Credit Unions, and certain internal manuals.

(c) Popular FOIA Index: Records released in response to a FOIA request, that NCUA determines are likely to be the subject of subsequent requests because of the nature of their subject matter. The Popular FOIA Index will be available on the NCUA web site on or before December 31, 1999.

§ 792.04 How can I obtain these records?

You may obtain these types of records or information in the following ways:

(a) You may obtain copies of the records referenced in § 792.02 by obtaining the index referred to in § 792.03 and following the ordering instructions it contains, or by making a request to the FOIA Officer, NCUA, Office of General Counsel at 1775 Duke Street, Alexandria, Virginia 22314–3428.

(b) If they were created by NCUA on or after November 1, 1996, records referenced in § 792.02 are available on the NCUA web site, found at http://www.ncua.gov.

§ 792.05 What is the significance of records made available and indexed?

The records referred to in § 792.02 may be relied on, used, or cited as precedent by NCUA against a party, provided:

(a) The materials have been indexed and either made available or published; or

(b) The party has actual and timely notice of the materials' contents.

Records Available Upon Request

§ 792.06 Can I obtain other records?

Except with respect to records routinely made available under § 792.02 or published in the **Federal Register**, or to the extent that records are exempt under the FOIA, if you make a request for records in accordance with this subpart, NCUA will make such records available to you, including records maintained in electronic format, as long as you agree to pay the actual, direct costs.

§ 792.07 Where do I send my request?

(a) You must send your request to one of NCUA's Information Centers. The Central Office, Regional Offices, Office of Inspector General and the Asset Management and Assistance Center are designated as Information Centers for the NCUA. The Freedom of Information Officer of the Office of General Counsel is responsible for the operations of the Information Center maintained at the Central Office. The Regional Directors are responsible for the operation of the Information Centers in their Regional Offices. The Inspector General is responsible for the operation of the Office of Inspector General Information Center.

(b) If you think that the records are located at one of NCUA's Regional Offices, then you should send your request to the appropriate Regional Director, whose address can be found in § 790.2(c) of this chapter.

(c) If you think that the records are located at the Asset Management and Assistance Center, then you should send your request to the President, Asset Management and Assistance Center, 4807 Spicewood Springs Road, Suite 5100, Austin, Texas 78759–8490.

(d) If you think that the records you want are in the files of the Office of Inspector General, then you should send your request to the Inspector General, NCUA, 1775 Duke Street, Alexandria, Virginia 22314–3428.

(e) When you are not sure of the location of records, or if you think that the records you want are located in the Central Office, you should send your request to the Freedom of Information Officer at NCUA, Office of the General Counsel, 1775 Duke Street, Alexandria, Virginia 22314–3428. You may also send your request by electronic mail to FOIA@NCUA.gov.

§ 792.08 What must I include in my request?

Your request must include the following:

(a) Your name, address and a telephone number where you can be reached during normal business hours.

(b) A reasonable description of the records you seek. A reasonable description is one that enables an NCUA employee, who is familiar with the subject area of the request, to locate the record with a reasonable amount of effort.

(c) A statement agreeing to pay all applicable fees or to pay fees up to a certain maximum amount, or requesting a fee reduction or waiver in accordance with § 792.27. If the actual fees are expected to exceed the maximum amount you indicate in your request, NCUA will contact you to see if you are willing to pay the estimated fees. If you do not want to pay the estimated fees, your request will be closed and no bill will be sent.

(d) If other than paper copy, you must identify the form and format of responsive information you are requesting.

§ 792.09 What if my request does not meet the requirements of this subpart?

NCUA need not accept or process your request if it does not comply with the requirements of this subpart. NCUA may return such a request to you with an explanation of the deficiency. You may then submit a corrected request, which will be treated as a new request.

§ 792.10 What will NCUA do with my request?

(a) On receipt of any request, the Information Center assigns it to the appropriate processing schedule, pursuant to paragraph (b) of this section. The date of receipt for any request, including one that is addressed incorrectly or that is referred to NCUA by another agency, is the date the appropriate Information Center actually receives the request.

(b) NCUA has a multi-track processing system. Requests for records that are readily identifiable by the Information Center and have already been cleared for public release may qualify for fast track processing. Requests which meets the requirements of § 792.18 will be processed on the expedited track. All other requests will be handled under normal processing procedures.

(c) The Information Center will make the determination whether a request qualifies for fast track processing or expedited track processing. You may contact the Information Center to learn to which track your request has been assigned. If your request has not qualified for fast track processing, you will have an opportunity to limit the scope of material requested to qualify for fast track processing. Limitations of requests must be in writing. If your request for expedited processing is not granted, you will be advised of your right to appeal.

(d) The Information Center will normally process requests in the order they are received in the separate processing tracks. However, in NCUA's discretion, a particular request may be processed out of turn.

(e) Upon a determination by the appropriate Information Center to comply with your initial request for records, the records will be made promptly available to you. If we notify you of a denial of your request, we will include the names and titles or positions of each person responsible for the denial.

§ 792.11 What kind of records are exempt from public disclosure?

(a) All records of NCUA or any officer, employee, or agent thereof, are confidential, privileged and exempt from disclosure, except as otherwise provided in this subpart, if they are:

(1) Records specifically authorized under criteria established by an Executive Order to be kept secret in the interest of national defense or foreign policy and are in fact properly classified pursuant to an Executive Order.

(2) Records related solely to NCUA internal personnel rules and practices. This exemption applies to internal rules or instructions which must be kept confidential in order to assure effective performance of the functions and activities for which NCUA is responsible and which do not materially affect members of the public. This exemption also applies to manuals and instructions to the extent that release of the information would permit circumvention of laws or regulations.

(3) Specifically exempted from disclosure by statute, where the statute either makes nondisclosure mandatory or establishes particular criteria for withholding information.

(4) Records which contain trade secrets and commercial or financial information which relate to the business, personal or financial affairs of any person or organization, are furnished to NCUA, and are confidential or privileged. This exemption includes, but is not limited to, various types of confidential sales and cost statistics, trade secrets, and names of key customers and personnel. Assurances of confidentiality given by staff are not binding on NCUA.

(5) Inter-agency or intra-agency memoranda or letters which would not be available by law to a private party in litigation with NCUA. This exemption preserves the existing freedom of NCUA officials and employees to engage in full and frank written or taped communications with each other and with officials and employees of other agencies. It includes, but is not limited to, inter-agency and intra-agency reports, memoranda, letters, correspondence, work papers, and minutes of meetings, as well as staff papers prepared for use within NCUA or in concert with other governmental agencies.

(6) Personnel, medical, and similar files (including financial files), the disclosure of which without written permission would constitute a clearly unwarranted invasion of personal privacy. Files exempt from disclosure include, but are not limited to:

(i) The personnel records of the NCUA;

(ii) The personnel records voluntarily submitted by private parties in response to NCUA's requests for proposals; and

(iii) Files containing reports, records or other material pertaining to individual cases in which disciplinary or other administrative action has been or may be taken.

(7) Records or information compiled for law enforcement purposes, but only to the extent that the production of such law enforcement records or information:

(i) Could reasonably be expected to interfere with enforcement proceedings;

(ii) Would deprive a person of a right to a fair trial or an impartial adjudication;

(iii) Could reasonably be expected to constitute an unwarranted invasion of personal privacy;

(iv) Could reasonably be expected to disclose the identity of a confidential source, including a state, local, or foreign agency or authority or any private institution which furnished information on a confidential basis, and, in the case of a record or information compiled by a criminal law enforcement authority in the course of a criminal investigation on or by an agency conducting a lawful national security intelligence investigation, information furnished by the confidential source;

(v) Would disclose techniques and procedures for law enforcement investigation or prosecutions, or would disclose guidelines for law enforcement investigations or prosecutions if such disclosure could reasonably be expected to risk circumvention of the law; or

(vi) Could reasonably be expected to endanger the life or physical safety of any individual. This includes, but is not limited to, information relating to enforcement proceedings upon which NCUA has acted or will act in the future.

(8) Contained in or related to examination, operating or condition reports prepared by, or on behalf of, or for the use of NCUA or any agency responsible for the regulation or supervision of financial institutions. This includes all information, whether in formal or informal report form, the disclosure of which would harm the financial security of credit unions or would interfere with the relationship between NCUA and credit unions.

(b) We will provide any reasonably segregable portion of a requested record after deleting those portions that are exempt from disclosure under this section.

§ 792.12 How will I know what records NCUA has determined to be exempt?

As long as it is technically feasible and does not threaten an interest protected by the FOIA, we will:

(a) Mark the place where we redacted information from documents released to you and note the exemption that protects the information from public disclosure; or

(b) Make reasonable efforts to include with our response to you an estimate of the volume of information withheld.

§ 792.13 Can I get the records in different forms or formats?

NCUA will provide a copy of the record in any form or format requested,

such as computer disk, if the record is readily reproducible by us in that form or format, but we will not provide more than one copy of any record.

§ 792.14 Who is responsible for responding to my request?

The appropriate Regional Director, the Inspector General, the President of the Asset Management and Assistance Center, or the Freedom of Information Officer, or, in their absence, their designee, is responsible for making the initial determination on whether to grant or deny a request for information. This official may refer a request to an NCUA employee who is familiar with the subject area of the request. Other NCUA staff members may aid the official by providing information, advice, recommending a decision, or implementing a decision, but no NCUA employee other than an authorized official may make the initial determination. Referral of a request by the official to an employee will not affect the time limitation imposed in § 792.15 unless the request involves an unusual circumstance as provided in § 792.16.

§ 792.15 How long will it take to process my request?

NCUA will respond to requests within 20 working days, except:

(a) Where the running of such time is suspended for payment of fees pursuant to § 792.26;

(b) In unusual circumstances, as defined in 5 U.S.C. 552(a)(6)(B) and § 792.16, the time limit may be extended for:

(1) An additional 10 working days as provided by written notice to you, stating the reasons for the extension and the date on which a determination will be sent; or

(2) Such alternative time period as mutually agreed by you and the Information Office, when NCUA notifies you that the request cannot be processed in the specified time limit.

§ 792.16 What unusual circumstances can delay NCUA's response?

(a) In unusual circumstances, the time limits for responding to your request (or your appeal) may be extended by NCUA. If NCUA extends the time it will provide you with written notice, setting forth the reasons for such extension and the date on which a determination is expected to be dispatched. Our notice will not specify a date that would result in an extension for more than 10 working days, except as set forth in paragraph (c) of this section. The unusual circumstances that can delay NCUA's response to your request are:

(1) The need to search for, and collect the requested records from field facilities or other establishments that are separate from the office processing the request;

(2) The need to search for, collect, and appropriately examine a voluminous amount of separate and distinct records which are demanded in a single request; or

(3) The need for consultation, which will be conducted with all practicable speed, with another agency having substantial interest in the determination of the request or among two or more components of NCUA having a substantial interest in the subject matter.

(b) If you, or you and a group of others acting in concert, submit multiple requests that NCUA believes actually constitute a single request, which would otherwise satisfy the unusual circumstances criteria specified in this section, and the requests involve related matters, then NCUA may aggregate those requests and the provisions of § 792.15(b) will apply.

(c) If NCUA sends you an extension notice, it will also advise you that you can either limit the scope of your request so that it can be processed within the statutory time limit or agree to an alternative time frame for processing your request.

§ 792.17 What can I do if the time limit passes and I still have not received a response?

You can file suit against NCUA because you will be deemed to have exhausted your administrative remedies if NCUA fails to comply with the time limit provisions of this subpart. If NCUA can show that exceptional circumstances exist and that it is exercising due diligence in responding to your request, the court may retain jurisdiction and allow NCUA to complete its review of the records. In determining whether exceptional circumstances exist, the court may consider your refusal to modify the scope of your request or arrange an alternative time frame for processing after being given the opportunity to do so by NCUA, when it notifies you of the existence of unusual circumstances as set forth in § 792.16.

Expedited Processing

§ 792.18 What if my request is urgent and I cannot wait for the records?

You may request expedited processing of your request if you can show a compelling need for the records. In cases where your request for expedited processing is granted or if NCUA has determined to expedite the response, it will be processed as soon as practicable.

(a) To demonstrate a compelling need for expedited processing, you must provide a certified statement. The statement, certified by you to be true and correct to the best of your knowledge and belief, must demonstrate that:

(1) The failure to obtain the records on an expedited basis could reasonably be expected to pose an imminent threat to the life or physical safety of an individual; or

(2) The requester is a representative of the news media, as defined in § 792.20, and there is urgency to inform the public concerning actual or alleged NCUA activity.

(b) In response to a request for expedited processing, the Information Center will notify you of the determination within ten days of receipt of the request. If the Information Center denies your request for expedited processing, you may file an appeal pursuant to the procedures set forth in § 792.28, and NCUA will expeditiously respond to the appeal.

(c) The Information Center will normally process requests in the order they are received in the separate processing tracks. However, in NCUA's discretion, a particular request may be processed out of turn.

Fees

§ 792.19 How does NCUA calculate the fees for processing my request?

We will charge you our allowable direct costs, unless they are less than the cost of billing you. Direct costs means those expenditures that NCUA actually incurs in searching for, duplicating and reviewing documents to respond to a FOIA request. Search means all time spent looking for material that is responsive to a request, including page-by-page or line-by-line identification of material within documents. Searches may be done manually or by computer. Search does not include modification of an existing program or system that would significantly interfere with the operation of an automated information system. Review means examining documents to determine whether any portion should be withheld and preparing documents for disclosure. Fees are subject to change as costs increase. The current rate schedule is available on our web site at http://www.ncua.gov. We may contract with the private sector to locate, reproduce or disseminate records. NCUA will not contract out responsibilities that FOIA requires it to discharge, such as determining the applicability of an exemption, or determining whether to waive or reduce fees. The following labor and duplication rate calculations apply:

(a) NCUA will charge fees at the following rates for manual searches for and review of records:

(1) If search/review is done by clerical staff, the hourly rate for CU–5, plus 16% of that rate to cover benefits;

(2) If search/review is done by professional staff, the hourly rate for CU–13, plus 16% of that rate to cover benefits.

(b) NCUA will charge fees at the hourly rate for CU–13, plus 16% of that rate to cover benefits, plus the hourly cost of operating the computer for computer searches for records.

(c) NCUA will charge the following duplication fees:

(1) The per-page fee for paper copy reproduction of a document is $.05;

(2) The fee for documents generated by computer is the hourly fee for the computer operator, plus the cost of materials (computer paper, tapes, labels, etc.);

(3) If any other method of duplication is used, NCUA will charge the actual direct cost of duplication.

§ 792.20 What are the charges for each fee category?

The fee category definitions are:

(a) *Commercial use request* means a request from or on behalf of one who seeks information for a use or purpose that furthers the commercial, trade, or profit interests of the requester or the person on whose behalf the request is made.

(b) *Educational institution* means a preschool, an elementary or secondary school, an institution of undergraduate higher education, an institution of graduate higher education, an institution of professional education, and an institution of vocational education operating a program or programs of scholarly research.

(c) *Noncommercial scientific institution* means an institution that is not operated for a ''commercial'' purpose as that term is used in paragraph (a) of this section and is operated solely for the purpose of conducting scientific research, the results of which are not intended to promote any particular product or industry.

(d) *Representative of the news media* means any person actively gathering news for an entity that is organized and operated to publish or broadcast news to the public. Included within the meaning of public is the credit union community. The term news means information that is about current events or that would be of current interest to the public. You may consult the following chart to find the fees applicable to your request:

If your fee category is	You'll receive	And you'll be charged
Commercial use	0 hours free search	search time
	0 hours free review	review time
	0 free pages	duplication
Educational institution, noncommercial scientific institution, newsmedia.	Unlimited free search hours	duplication
	Unlimited free review hours	
	100 free pages	
All others	2 hours free search	search time
	Unlimited free review hours.	
	100 free pages	duplication

§ 792.21 Will NCUA provide a fee estimate?

NCUA will notify you of the estimated amount if fees are likely to exceed $25, unless you have indicated in advance a willingness to pay fees as high as those anticipated. You will then have the opportunity to confer with NCUA personnel to reformulate the request to meet your needs at a lower cost.

§ 792.22 What will NCUA charge for other services?

Complying with requests for special services is entirely at the discretion of NCUA. NCUA will recover the full costs of providing such services to the extent it elects to provide them.

§ 792.23 Can I avoid charges by sending multiple, small requests?

You may not file multiple requests, each seeking portions of a document or similar documents, solely to avoid payment of fees. If this is done, NCUA may aggregate any such requests and charge you accordingly.

§ 792.24 Can NCUA charge me interest if I fail to pay my bill?

NCUA can assess interest charges on an unpaid bill starting on the 31st day following the date of the bill. If you fail to pay your bill within 30 days, interest will be at the rate prescribed in 31 U.S.C. 3717, and will accrue from the date of the billing.

§ 792.25 Will NCUA charge me if the records are not found or are determined to be exempt?

NCUA may assess fees for time spent searching and reviewing, even if it fails to locate the records or if records located are determined to be exempt from disclosure.

§ 792.26 Will I be asked to pay fees in advance?

NCUA will require you to give an assurance of payment or an advance payment only when:

(a) NCUA estimates or determines that allowable charges that you may be required to pay are likely to exceed $250. NCUA will notify you of the likely cost and obtain satisfactory assurance of full payment where you have a history of prompt payment of FOIA fees, or require an advance payment of an amount up to the full estimated charges in the case where you have no history of payment; or

(b) You have previously failed to pay a fee charged in a timely fashion. NCUA may require you to pay the full amount owed, plus any applicable interest, or demonstrate that you have, in fact, paid the fee, and to make an advance payment of the full amount of the estimated fee before we begin to process a new request or a pending request from you.

(c) If you are required to make an advance payment of fees, then the administrative time limits prescribed in § 792.16 will begin only after NCUA has received the fee payments described.

Fee Waiver or Reduction

§ 792.27 Can fees be reduced or waived?

You may request that NCUA waive or reduce fees if disclosure of the information you request is in the public interest because it is likely to contribute significantly to public understanding of the operations or activities of the government, and is not primarily in your commercial interest.

(a) NCUA will make a determination of whether the public interest requirement above is met based on the following factors:

(1) Whether the subject of the requested records concerns the operations or activities of the government;

(2) Whether the disclosure is likely to contribute to an understanding of government operations or activities;

(3) Whether disclosure of the requested information will contribute to public understanding; and

(4) Whether the disclosure is likely to contribute significantly to public understanding of government operations or activities,

(b) If the public interest requirement is met, NCUA will make a determination on the commercial interest requirement based upon the following factors:

(1) Whether you have a commercial interest that would be furthered by the requested disclosure; and if so

(2) Whether the magnitude of your commercial interest is sufficiently large in comparison with the public interest in disclosure, that disclosure is primarily in your commercial interest.

(c) If the required public interest exists and your commercial interest is not primary in comparison, NCUA will waive or reduce fees.

(d) If you are not satisfied with our determination on your fee waiver or reduction request, you may submit an appeal to the General Counsel in accordance with § 792.28.

Appeals

§ 792.28 What if I am not satisfied with the response I receive?

If you are not satisfied with NCUA's response to your request, you can file an administrative appeal. Your appeal must be in writing and must be filed within 30 days from receipt of the initial determination (in cases of denials of an entire request, or denial of a request for fee waiver or reduction), or from receipt of any records being made available pursuant to the initial determination (in cases of partial denials.) In its response to your initial request, the Freedom of Information Act Officer, Inspector General, President of the Asset Management and Assistance Center, or responsible Regional Director, (or designee,) will notify you that you may appeal any adverse determination to the Office of General Counsel. The General Counsel, or designee, as set forth in this paragraph, will:

(a) Make a determination with respect to any appeal within 20 days (excepting Saturdays, Sundays, and legal public holidays) after the receipt of such appeal. If, on appeal, the denial of the request for records is, in whole or in part, upheld, the Office of General Counsel will notify you of the provisions for judicial review of that determination under FOIA. Where you do not address your request or appeal to the proper official, the time limitations stated above will be computed from the receipt of the request or appeal by the proper official.

(b) The General Counsel is the official responsible for determining all appeals from initial determinations. In case of this person's absence, the appropriate officer acting in the General Counsel's stead will make the appellate determination, unless such officer was responsible for the initial determination, in which case the Vice-Chairman of the NCUA Board will make the appellate determination.

(c) All appeals should be addressed to the General Counsel in the Central Office and should be clearly identified as such on the envelope and in the letter of appeal by using the indicator ''FOIA–APPEAL.'' Failure to address an appeal properly may delay commencement of the time limitation stated in paragraph (a)(1) of this section, to take account of the time reasonably required to forward the appeal to the Office of General Counsel.

§ 792.29 If I send NCUA confidential commercial information, can it be disclosed under FOIA?

(a) If you submit confidential commercial information to NCUA, it may be disclosed in response to a FOIA request in accordance with this section.

(b) For purposes of this section:

(1) *Confidential commercial information* means commercial or financial information provided to NCUA by a submitter that arguably is protected from disclosure under § 792.11(a)(4) because disclosure could reasonably be expected to cause substantial competitive harm.

(2) *Submitter* means any person or entity who provides business information, directly or indirectly, to NCUA.

(c) Submitters of business information must use good faith efforts to designate, by appropriate markings, either at the time of submission or at a reasonable time thereafter, those portions of their submissions deemed to be protected from disclosure under § 792.11(a)(4). Such a designation shall expire ten years after the date of submission.

(d) We will provide a submitter with written notice of a FOIA request or administrative appeal encompassing designated business information when:

(1) The information has been designated in good faith by the submitter as confidential commercial information deemed protected from disclosure under § 792.11(a)(4); or

(2) NCUA has reason to believe that the information may be protected from disclosure under § 792.11(a)(4).

(e) A copy of the notice to the submitter will also be provided to the FOIA requester.

(f) Through the notice described in paragraph (d) of this section, NCUA will afford the submitter a reasonable period of time within which to provide a detailed written statement of any objection to disclosure. The statement must describe why the information is confidential commercial information and why it should not be disclosed.

(g) Whenever we decide that we must disclose confidential commercial information over the objection of the submitter, we will send both the submitter and the FOIA requester, within a reasonable number of days prior to the specified disclosure date, a written notice which will include:

(1) A statement of the reasons for which the submitter's disclosure objection was not sustained; and

(2) A description of the information to be disclosed; and

(3) A specified disclosure date.

(h) If a requester brings suit to compel disclosure of confidential commercial information, we will promptly notify the submitter.

(i) The notice requirements of paragraph (d) of this section do not apply if:

(1) We determine that the information should not be disclosed;

(2) The information has been lawfully published or has been officially made available to the public;

(3) Disclosure of the information is required by law; or

(4) The designation made by the submitter in accordance with paragraph (c) of this section appears obviously frivolous; except that in such case, NCUA will provide the submitter with written notice of any final administrative decision to disclose the information within a reasonable number of days prior to the specified disclosure date.

Release of Exempt Information

§ 792.30 Is there a prohibition against disclosure of exempt records?

Except those authorized officials listed in § 792.14, or as provided in §§ 792.31–792.32, and subpart C of this part, no officer, employee, or agent of NCUA or of any federally-insured credit union shall disclose or permit the disclosure of any exempt records of NCUA to any person other than those NCUA or credit union officers, employees, or agents properly entitled to such information for the performance of their official duties.

§ 792.31 Can exempt records be disclosed to credit unions, financial institutions and state or federal agencies?

The NCUA Board, in its sole discretion, or any person designated by it in writing, may make available to certain governmental agencies and insured financial institutions copies of reports of examination and other documents, papers or information for their use, when necessary, in the performance of their official duties or functions. All reports, documents and papers made available pursuant to this paragraph shall remain the property of NCUA. No person, agency or employee shall disclose the reports or exempt records without NCUA's express written authorization.

§ 792.32 Can exempt records be disclosed to investigatory agencies?

The NCUA Board, or any person designated by it in writing, in its discretion and in appropriate circumstances, may disclose to proper federal or state authorities copies of exempt records pertaining to irregularities discovered in credit unions which may constitute either unsafe or unsound practices or violations of federal or state, civil or criminal law.

[FR Doc. 98–7726 Filed 3–24–98; 8:45 am]

BILLING CODE 7535–01–U

DEPARTMENT OF TRANSPORTATION

Federal Aviation Administration

14 CFR Part 71

[Airspace Docket No. 97–ACE–36]

Amendment to Class D and Class E Airspace; Topeka, Philip Billard Municipal Airport, KS; Correction

AGENCY: Federal Aviation Administration, DOT.

ACTION: Direct final rule; confirmation of effective date and correction.

SUMMARY: This notice confirms the effective date of a direct final rule which revises Class D and Class E airspace at Topeka, Philip Billard Municipal Airport, KS, and corrects two errors in the airspace designation as published in the direct final rule.

DATES: The direct final rule published at 63 FR 4378 is effective on 0901 UTC, April 23, 1998.

This correction is effective on April 23, 1998.

FOR FURTHER INFORMATION CONTACT: Kathy Randolph, Air Traffic Division, Airspace Branch, ACE–520C, Federal Aviation Administration, 601 East 12th Street, Kansas City, Missouri 64106; telephone: (816) 426–3408.

SUPPLEMENTARY INFORMATION: On January 29, 1998, the FAA published in the **Federal Register** a direct final rule, request for comments, which modified the Class D and Class E airspace at Topeka, Philip Billard Municipal Airport, KS (FR Doc. 98–2217, 63 FR 4378, Airspace Docket No. 97–ACE–36). Two errors were subsequently discovered in the Class E airspace designation. After careful review of all available information related to the subject presented above, the FAA has determined that air safety and the public interest require adoption of the rule. The FAA has determined that these corrections will not change the meaning of the action nor add any additional burden on the public beyond that already published. This action corrects those errors and confirms the effective date of the direct final rule.

The FAA uses the direct final rulemaking procedure for a non-controversial rule where the FAA believes that there will be no adverse public comment. This direct final rule advises the public that no adverse comments were anticipated, and that unless a written adverse comment, or a written notice of intent to submit such an adverse comment, were received within the comment period, the regulation would become effective on April 23, 1998. No adverse comments were received, and thus this notice confirms that this direct final rule will become effective on that date.

Correction

In rule FR Doc. 98–2217 published in the **Federal Register** on January 29, 1998, 63 FR 4378, make the following correction to the Topeka, Philip Billard Municipal Airport, KS, Class E airspace designation incorporated by reference in 14 CFR 71.1:

§ 71.1 [Corrected]

On page 4379 in the second column, in the airspace designation, under ACE KS E4 Topeka, Philip Billard Municipal Airport, KS [Revised], in the first paragraph, in the sixth line, the geographic coordinates for the Topeka VORTAC are corrected by removing ''(Lat. 39°08′14″ N., long. 95°32′51″ W.)'' and adding ''(Lat. 39°08′14″ N., long. 95°32′57″ W.)'' in its place.

On page 4379, in the second column, in the airspace designations, under ACE KS E4 Topeka, Philip Billard Municipal Airport, KS [Revised], after the sixth line, insert; Topeka, Philip Billard Municipal Airport ILS (Lat. 39°03′47″ N., long. 95°36′42″ W.).

Issued in Kansas City, MO on March 5, 1998.

Bryan H. Burleson,

Acting Manager, Air Traffic Division Central, Region.

[FR Doc. 98–7822 Filed 3–24–98; 8:45 am]

BILLING CODE 4910–13–M

DEPARTMENT OF TRANSPORTATION

Federal Aviation Administration

14 CFR Part 71

[Airspace Docket No. 97–ACE–35]

Amendment to Class D and Class E Airspace; Salina, KS; Correction.

AGENCY: Federal Aviation Administration, DOT.

ACTION: Direct final rule; confirmation of effective date and correction.

SUMMARY: This notice confirms the effective date of a direct final rule which revises Class D and Class E airspace at Salina Municipal airport, KS, and corrects two errors in the airspace designation as published in the direct final rule.

DATES: The direct final rule published at 63 FR 4376 is effective on 0901 UTC, April 23, 1998.

This correction is effective on April 23, 1998.

FOR FURTHER INFORMATION CONTACT: Kathy Randolph, Air Traffic Division, Airspace Branch, ACE–520C, Federal Aviation Administration, 601 East 12th Street, Kansas City, Missouri 64106; telephone: (816) 426–3408.

SUPPLEMENTARY INFORMATION: On January 29, 1998, the FAA published in the **Federal Register** a direct final rule, request for comments, which modified the Class D and Class E airspace at Salina Municipal Airport, KS (FR Doc. 98–2216, 63 FR 4376, Airspace Docket No. 97–ACE–35). Two errors were subsequently discovered in the Class E airspace designation. After careful review of all available information related to the subject presented above, the FAA has determined that air safety and the public interest require adoption of the rule. The FAA has determined that these corrections will not change the meaning of the action nor add any additional burden on the public beyond that already published. This action corrects those errors and confirms the effective date of the direct final rule.

The FAA uses the direct final rulemaking procedure for a non-controversial rule where the FAA believes that there will be no adverse public comment. This direct final rule advised the public that no adverse

comments were anticipated, and that unless a written adverse comment, or a written notice of intent to submit such an adverse comment, were received within the comment period, the regulation would become effective on April 23, 1998. No adverse comments were received, and thus this notice confirms that this direct final rule will become effective on that date.

Correction

In rule FR Doc. 98–2216 published in the **Federal Register** on January 29, 1998, 63 FR 4376, make the following correction to the Salina Municipal Airport, KS, Class E airspace designation incorporated by reference in 14 CFR 71.1:

§ 71.1 [Corrected]

On page 4378 in the first column, in the airspace designation, under ACE KS E5 Salina, KS [Revised], in the fifth line, the geographic coordinates for the Salina VORTAC are corrected by removing ''(lat. 38°55′35″ N., long. 97°37′35″ W.);; and adding ''(lat. 38°55′31″ N., long. 97°37′17″ W.)'' in its place.

On page 4378, in the first column, in the airspace designation, under ACE E5 KS Salina, KS [Revised], after the seventh line, insert; Salina Municipal Airport ILS (Lat. 38°48′53″ N., long. 97°38′46″ W.)

Issued in Kansas City, MO on March 5, 1998.

Bryan H. Burleson,

Acting Manager, Air Traffic Division, Central Region.

[FR Doc. 98–7821 Filed 3–24–98; 8:45 am]

BILLING CODE 4910–13–M

DEPARTMENT OF TRANSPORTATION

Federal Aviation Administration

14 CFR Part 71

[Airspace Docket No. 97–ACE–37]

Amendment to Class E Airspace; Iola, KS

AGENCY: Federal Aviation Administration, DOT.

ACTION: Direct Final rule, confirmation of effective date.

SUMMARY: This notice confirms the effective date of a direct final rule which revises Class E airspace at Iola, KS.

DATES: The direct final rule published at 63 FR 4381 is effective on 0901 UTC April 23, 1998.

FOR FURTHER INFORMATION CONTACT: Kathy Randolph, Air Traffic Division, Airspace Branch ACE–520C, Federal Aviation Administration, 601 East 12th Street, Kansas City, Missouri 64106; telephone: (816) 426–3408.

SUPPLEMENTARY INFORMATION: The FAA published this direct final rule with a request for comments in the **Federal Register** on January 29, 1998 (63 FR 4381). The FAA uses the direct final rulemaking procedure for a non-controversial rule where the FAA believes that there will be no adverse public comment. This direct final rule advised the public that no adverse comments were anticipated, and that unless a written adverse comment, or a written notice of intent to submit such an adverse comment, were received within the comment period, the regulation would become effective on April 23, 1998. No adverse comments were received, and thus this notice confirms that this direct final rule will become effective on that date.

Issued in Kansas City, MO on March 5, 1998.

Bryan H. Burleson,

Acting Manager, Air Traffic Division, Central Region.

[FR Doc. 98–7823 Filed 3–24–98; 8:45 am]

BILLING CODE 4910–13–M

DEPARTMENT OF TRANSPORTATION

Federal Aviation Administration

14 CFR Part 71

[Airspace Docket No. 97–AEA–50]

Amendment to Class E Airspace; Andover, NJ

AGENCY: Federal Aviation Administration (FAA) DOT.

ACTION: Final rule.

SUMMARY: This action amends Class E airspace extending upward from 700 feet Above Ground Level (AGL) at Andover, NJ. The development of a Standard Instrument Approach Procedure (SIAP) based on the Global Positioning System (GPS) at Aeroflex-Andover Airport has made this action necessary. This action is intended to provide adequate Class E airspace to contain instrument flight rules (IFR) operations for aircraft executing the GPS Runway (RWY) 3 SIAP to Aeroflex-Andover Airport at Andover, NJ.

EFFECTIVE DATE: 0901 UTC, August 13, 1998.

FOR FURTHER INFORMATION CONTACT: Mr. Francis Jordan, Airspace Specialist, Airspace Branch, AEA–520, Air Traffic Division, Eastern Region, Federal Aviation Administration, Federal Building #111, John F. Kennedy International Airport, Jamaica, New York 11430; telephone: (718) 553–4521.

SUPPLEMENTARY INFORMATION:

History

On January 27, 1998, a proposal to amend Part 71 of the Federal Aviation Regulations (14 CFR part 71) to amend the Class E airspace at Andover, NJ, was published in the **Federal Register** (63 FR 3859). The development of a GPS RWY 3 SIAP for Aeroflex-Andover Airport requires the amendment of the Class E airspace at Andover, NJ. The proposal was to amend controlled airspace extending upward from 700 feet AGL to contain IFR operations in controlled airspace during portions of the terminal operation and while transitioning between the enroute and terminal environments.

Interested parties were invited to participate in this rulemaking proceeding by submitting written comments on the proposal to the FAA. No comments to the proposal were received. The rule is adopted as proposed.

The coordinates for this airspace docket are based on North American Datum 83. Class E airspace area designations for airspace extending upward from 700 feet AGL are published in paragraph 6005 of FAA Order 7400.9E, dated September 10, 1997, and effective September 16, 1997, which is incorporated by reference in 14 CFR 71.1. The Class E airspace designation listed in this document will be published subsequently in the Order.

The Rule

This amendment to part 71 of the Federal Aviation Regulations (14 CFR part 71) amends Class E airspace at Andover, NJ, to provide controlled airspace extending upward from 700 feet AGL for aircraft executing the GPS RWY 3 SIAP to Aeroflex-Andover Airport.

The FAA has determined that this regulation only involves an established body of technical regulations for which frequent and routine amendments are necessary to keep them operationally current. Therefore, this regulation—(1) is not a ''significant regulatory action'' under Executive Order 12866; (2) is not a ''significant rule'' under DOT Regulatory Policies and Procedures (44 FR 11034; February 26, 1979); and (3) does not warrant preparation of a Regulatory Evaluation as the anticipated impact is so minimal. Since this is a routine matter that will only affect air traffic procedures and air navigation it is certified that this rule will not have a significant economic impact on a substantial number of small entities under the criteria of the Regulatory Flexibility Act.

List of Subjects in 14 CFR Part 71

Airspace, Incorporation by reference, Navigation (air).

Adoption of the Amendment

In consideration of the foregoing, the Federal Aviation Administration amends 14 CFR part 71 as follows:

PART 71—[AMENDED]

1. The authority citation for 14 CFR part 71 continues to read as follows:

Authority: 49 U.S.C. 106(g), 40103, 40113, 40120; EO 10854, 24 FR 9565, 3 CFR, 1959–1963 Comp., p. 389.

§ 71.1 [Amended]

2. The incorporation by reference in 14 CFR 71.1 of Federal Aviation Administration Order 7400.9E, Airspace Designations and Reporting Points, dated September 10, 1997, and effective September 16, 1997, is amended as follows:

Paragraph 6005 Class E airspace areas extending upward from 700 feet or more above the surface of the earth

* * * * *

AEA NJ AEA E5 Andover, NJ [Revised]

Aeroflex-Andover Airport, NJ
(Lat. 41°00′31″ N., long. 74°44′17″ W.)

That airspace extending upward from 700 feet above the surface within a 10-mile radius of Aeroflex-Andover Airport, excluding the portion that coincides with the Sussex, NJ, Blairstown, NJ, and New York, NY, Class E airspace areas.

* * * * *

Issued in Jamaica, New York on March 12, 1998.

Franklin D. Hatfield,

Manager, Air Traffic Division, Eastern Region.

[FR Doc. 98–7815 Filed 3–24–98; 8:45 am]

BILLING CODE 4910–13–M

DEPARTMENT OF TRANSPORTATION

Federal Aviation Administration

14 CFR Part 71

[Airspace Docket No. 97–AEA–48]

Amendment to Class E Airspace; Galax, VA

AGENCY: Federal Aviation Administration (FAA) DOT.

ACTION: Final rule.

SUMMARY: This action amends Class E airspace extending upward from 700 feet Above Ground Level (AGL) at Galax, VA. The development of a Standard Instrument Approach Procedure (SIAP) based on the Global Positioning System (GPS) at Twin County Airport has made this action necessary. This action is intended to provide adequate Class E airspace to contain instrument flight rules (IFR) operations for aircraft executing the GPS Runway (RWY) 10 SIAP to Twin County Airport at Galax, VA.

EFFECTIVE DATE: 0901 UTC, August 13, 1998.

FOR FURTHER INFORMATION CONTACT: Mr. Francis Jordan, Airspace Specialist, Airspace Branch, AEA–520, Air Traffic Division, Eastern Region, Federal Aviation Administration, Federal Building # 111, John F. Kennedy International Airport, Jamaica, New York 11430; telephone: (718) 553–4521.

SUPPLEMENTARY INFORMATION:

History

On January 27, 1998, a proposal to amend Part 71 of the Federal Aviation Regulations (14 CFR part 71) to amend the Class E airspace at Galax, VA, was published in the **Federal Register** (63 FR 3857). The development of a GPS RWY 18 SIAP for Twin County Airport requires the amendment of the Class E airspace at Galax, VA. The proposal was to amend controlled airspace extending upward from 700 feet AGL to contain IFR operations in controlled airspace during portions of the terminal operation and while transitioning between the enroute and terminal environments.

Interested parties were invited to participate in this rulemaking proceeding by submitting written comments on the proposal to the FAA. No comments to the proposal were received. The rule adopted as proposed.

The coordinates for this airspace docket are based on North American Datum 83. Class E airspace areas designations for airspace extending upward from 700 feet AGL are published in paragraph 6005 of FAA Order 7400.9E, dated September 10, 1997, and effective September 16, 1997, which is incorporated by reference in 14 CFR 71.1. The Class E airspace designation listed in this document will be published subsequently in the Order.

The Rule

This amendment to Part 71 of the Federal Aviation Regulation (14 CFR Part 71) amends Class E airspace at Galax, VA, to provide controlled airspace extending upward from 700 feet AGL for aircraft executing the GPS RWY 18 SIAP to Twin County Airport.

The FAA has determined that this regulation only involves an established body of technical regulations for which frequent and routine amendments are necessary to keep them operationally current. Therefore, this regulation—(1) is not a ''significant regulatory action'' under Executive Order 12866; (2) is not a ''significant rule'' under DOT Regulatory Policies and Procedures (44 FR 11034; February 26, 1997); and (3) does not warrant preparation of a Regulatory Evaluation as the anticipated impact is so minimal. Since this is a routine matter that will only affect air traffic procedures and air navigation it is certified that this rule will not have significant economic impact on a substantial number of small entities under the criteria of Regulatory Flexibility Act.

List of Subjects in 14 CFR Part 71

Airspace, Incorporation by reference, Navigation (air).

Adoption of the Amendment

In consideration of the foregoing, the Federal Aviation Administration amends 14 CFR Part 71 as follows:

PART 71—[AMENDED]

1. The authority citation for 14 CFR part 71 continues to read as follows:

Authority: 49 U.S.C. 106(g), 41013, 40113, 40120; EO 10854, 24 FR 9565, 3 CFR, 1959–1963 Comp., p. 389.

§ 71.1 [Amended]

2. The incorporation by reference in 14 CFR 71.1 of Federal Aviation Administration Order 7400.9E, Airspace Designations and Reporting Points, dated September 10, 1997, and effective September 16, 1997, is amended as follows:

Paragraph 6005 Class E airspace areas extending upward from 700 feet or more above the surface of the earth

* * * * *

AEA VA AEA E5, Galax VA [Revised]

Twin County Airport, VA
(Lat. 36°45′58″ N., long. 80°49′25″ W.)

That airspace extending upward from 700 feet above the surface within a 13-mile radius of Twin County Airport, excluding the portion that coincides with the Stuart, VA, Dublin, VA, and Marion, VA, Class E airspace areas.

* * * * *

Issued in Jamaica, New York on March 12, 1998.

Franklin D. Hartfield,

Manager, Air Traffic Division, Eastern Region.

[FR Doc. 98–7816 Filed 3–24–98; 8:45 am]

BILLING CODE 4910–13–M

DEPARTMENT OF TRANSPORTATION

Federal Aviation Administration

14 CFR Part 71

[Airspace Docket No. 97–AEA–49]

Amendment to Class E Airspace; Wilmington, DE

AGENCY: Federal Aviation Administration (FAA) DOT.

ACTION: Final rule.

SUMMARY: This action amends Class E airspace extending upward from 700 feet Above Ground Level (AGL) at Wilmington, DE. The development of a Standards Instrument Approach Procedure (SIAP) based on the Global Positioning System (GPS) at New Castle County Airport has made this action necessary. This action is intended to provide adequate Class E airspace to contain instrument flight rules (IFR) operations for aircraft executing the GPS Runway (RWY) 9 SIAP to New Castle County Airport at Wilmington, DE.

EFFECTIVE DATE: 0901 UTC, August 13, 1998.

FOR FURTHER INFORMATION CONTACT: Mr. Francis Jordan, Airspace Specialist, Airspace Branch, AEA–520, Air Traffic Division, Eastern Region, Federal Aviation Administration, Federal Building #111, John F. Kennedy International Airport, Jamaica, New York 11430; telephone: (718) 553–4521.

SUPPLEMENTARY INFORMATION:

History

On January 27, 1998, a proposal to amend Part 71 of the Federal Aviation Regulations (14 CFR Part 71) to amend the Class E airspace at Wilmington, DE, was published in the **Federal Register** (63 FR 3858). The development of a GPS RWY 9 SIAP for New Castle County Airport requires the amendment of the Class E airspace at Wilmington, DE. The proposal was to amend controlled airspace extending upward from 700 feet AGL to contain IFR operations in controlled airspace during portions of the terminal operation and while transitioning between the enroute and terminal environments.

Interested parties were invited to participate in this rulemaking proceeding by submitting written comments on the proposal to the FAA. No comments to the proposal were received. The rule is adopted as proposed.

The coordinates for this airspace docket are based on North American Datum 83. Class E airspace areas designations for airspace extending upward from 700 feet AGL are published in paragraph 6005 of FAA Order 7400.9E, dated September 10, 1997, and effective September 16, 1997, which is incorporated by reference in 14 CFR 71.1. The Class E airspace designation listed in this document will be published subsequently in the Order.

The Rule

This amendment to Part 71 of the Federal Aviation Regulations (14 CFR Part 71) amends Class E airspace at Wilmington, DE, to provide controlled airspace extending upward from 700 feet AGL for aircraft executing the GPS RWY 9 SIAP to New Castle County Airport.

The FAA has determined that this regulation only involves an established body of technical regulations for which frequent and routine amendments are necessary to keep them operationally current. Therefore, this regulation—(1) is not a ''significant regulatory action'' under Executive Order 12866; (2) is not a ''significant rule'' under DOT Regulatory Policies and Procedures (44 FR 11034; February 26, 1979); and (3) does not warrant preparation of a Regulatory Evaluation as the anticipated impact is so minimal. Since this is a routine matter that will only affect air traffic procedures and air navigation it is certified that this rule will not have significant economic impact on a substantial number of small entities under the criteria of the Regulatory Flexibility Act.

List of Subjects in 14 CFR Part 71

Airspace, Incorporation by reference, Navigation (air).

Adoption of the Amendment

In consideration of the foregoing, the Federal Aviation Administration amends 14 CFR part 71 as follows:

PART 71—[AMENDED]

1. The authority citation for 14 CFR part 71 continues to read as follows:

Authority: 49 U.S.C. 106(g), 40103, 40113, 40120; EO 10854, 24 FR 9565, 3 CFR, 1959–1963 Comp., p. 389.

§ 71.1 [Amended]

2. The incorporation by reference in 14 CFR 71.1 of Federal Aviation Administration Order 7400.9E, Airspace Designations and Reporting Points, dated September 10, 1997, and effective September 16, 1997, is amended as follows:

Paragraph 6005 Class E airspace areas extending upward from 700 feet or more above the surface of the earth

* * * * *

AEA DE AEA E5, Wilmington, DE [Revised]

New Castle County Airport, DE
(Lat. 39°40′43″ N., long. 75°36′24″ W.)
Summit Airpark, DE
(Lat. 39°31′13″ N., long. 75°43′14″ W.)

That airspace extending upward from 700 feet above the surface within a 6.7-mile radius of New Castle County Airport and within 4 miles each side of the 258° bearing from the airport extending from the 6.7-mile radius to 10 miles west of the airport and within a 6.6-mile radius of Summit Airpark and within 2.2 miles each side of a line bearing 345° from a point at lat. 39°23′36″ N., long. 75°40′35″ W., extending from said point to the 6.6-mile radius of Summit Airpark, excluding the portion that coincides with the Toughkenamon, PA Class E airspace area.

* * * * *

Issued in Jamaica, New York on March 12, 1998.

Franklin D. Hatfield,

Manager, Air Traffic Division, Eastern Region.

[FR Doc. 98–7818 Filed 3–24–98; 8:45 am]

BILLING CODE 4910–13–M

DEPARTMENT OF TRANSPORTATION

Federal Aviation Administration

14 CFR Part 71

[Airspace Docket No. 97–AEA–46]

Amendment to Class E Airspace; Danville, VA

AGENCY: Federal Aviation Administration (FAA) DOT.

ACTION: Final rule.

SUMMARY: This action amends Class E airspace extending upward from 700 feet Above Ground Level (AGL) at Danville, VA. The amendments to existing Standing Instrument Approach Procedures (SIAP)s at Danville Regional Airport has made this action necessary. This action is intended to provide adequate Class E airspace to contain instrument flight rules (IFR) operations for aircraft executing the amended Instrument Landing System (ILS) Runway (RWY) 2 SIAP and the amended Very High Frequency Omnidirectional Range (VOR) RWY 20 SIAP to Danville Regional Airport at Danville, VA.

EFFECTIVE DATE: 0901 UTC, August 13, 1998.

FOR FURTHER INFORMATION CONTACT: Mr. Francis Jordan, Airspace Specialist, Airspace Branch, AEA–520, Air Traffic Division, Eastern Region, Federal Aviation Administration, Federal Building #111, John F. Kennedy International Airport, Jamaica, New York 11430; telephone: (718) 553–4521.

SUPPLEMENTARY INFORMATION:

History

On January 27, 1998, a proposal to amend Part 71 of the Federal Aviation Regulations (14 CFR Part 71) to amend the Class E airspace at Danville, VA, was published in the **Federal Register** (63 FR 3855). The amendment of the ILS RWY 2 SIAP and the amendment of the VOR RWY 20 SIAP for Danville Regional Airport require the amendment of the Class E airspace at Danville, VA. The proposal was to amend controlled airspace extending upward from 700 feet AGL to contain IFR operations in controlled airspace during portions of the terminal operation and while transitioning between the enroute and terminal environments.

Interested parties were invited to participate in this rulemaking proceeding by submitting written comments on the proposal to the FAA. No comments to the proposal were received. The rule is adopted as proposed.

The coordinates for this airspace docket are based on North American Datum 83. Class E airspace areas designations for airspace extending upward from 700 feet AGL are published in paragraph 6005 of FAA Order 7400.9E, dated September 10, 1997, and effective September 16, 1997, which is incorporated by reference in 14 CFR 71.1. The Class E airspace designation listed in this document will be published subsequently in the Order.

The Rule

This amendment to Part 71 of the Federal Aviation Regulations (14 CFR Part 71) amends Class E airspace at Danville, VA, to provide controlled airspace extending upward from 700 feet AGL for aircraft executing the ILS RWY 2 SIAP and VOR RWY 20 SIAP to Danville Regional Airport.

The FAA has determined that this regulation only involves an established body of technical regulations for which frequent and routine amendments are necessary to keep them operationally current. Therefore, this regulation—(1) is not a ''significant regulatory action'' under Executive Order 12866; (2) is not a ''significant rule'' under DOT Regulatory Policies and Procedures (44 FR 11034; February 26, 1979); and (3) does not warrant preparation of a Regulatory Evaluation as the anticipated impact is so minimal. Since this is a routine matter that will only affect air traffic procedures and air navigation it is certified that this rule will not have significant economic impact on a substantial number of small entities under the criteria of the Regulatory Flexibility Act.

List of Subjects in 14 CFR Part 71

Airspace, Incorporation by reference, Navigation (air).

Adoption of the Amendment

In consideration of the foregoing, the Federal Aviation Administration amends 14 CFR part 71 as follows:

PART 71—[AMENDED]

1. The authority citation for 14 CFR part 71 continues to read as follows:

Authority: 49 U.S.C. 106(g), 40103, 40113, 40120; EO 10854, 24 FR 9565, 3 CFR, 1959–1963 Comp., p. 389.

§ 71.1 [Amended]

2. The incorporation by reference in 14 CFR 71.1 of Federal Aviation Administration Order 7400.9E, Airspace Designations and Reporting Points, dated September 10, 1997, and effective September 16, 1997, is amended as follows:

Paragraph 6005 Class E airspace areas extending upward from 700 feet or more above the surface of the earth

* * * * *

AEA VA AEA E5 Danville, VA [Revised]

Danville Regional Airport, VA
(Lat. 36°34′27″ N., long. 79°20′07″ W.)

That airspace extending upward from 700 feet above the surface within a 10-mile radius of Danville Regional Airport.

* * * * *

Issued in Jamaica, New York on March 12, 1998.

Franklin D. Hatfield,

Manager, Air Traffic Division, Eastern Region.

[FR Doc. 98–7819 Filed 3–24–98; 8:45 am]

BILLING CODE 4910–13–M

DEPARTMENT OF TRANSPORTATION

Federal Aviation Administration

14 CFR Part 71

[Airspace Docket No. 97–ACE–34]

Revocation, Establishment, and Modification of Class E Airspace Areas; Cedar Rapids, IA; Correction

AGENCY: Federal Aviation Administration, DOT.

ACTION: Direct final rule; confirmation of effective date and correction.

SUMMARY: This notice confirms the effective date of a direct final rule which revises Class E airspace at Cedar Rapids, The Eastern Iowa Airport, IA, and corrects an error in the airspace designation as published in the direct final rule.

DATES: The direct final rule published at 63 FR 4380 is effective on 0901 UTC, April 23, 1998.

This correction is effective on April 23, 1998.

FOR FURTHER INFORMATION CONTACT: Kathy Randolph, Air Traffic Division, Airspace Branch, ACE—520C, Federal Aviation Administration , 601 East 12th Street, Kansas City, Missouri 64106; telephone: (816) 426–3408.

SUPPLEMENTARY INFORMATION:

On January 29, 1998, the FAA published in the **Federal Register** a direct final rule, request for comments, which removed, established and modified Class E airspace at Cedar Rapids, The Eastern Iowa Airport, IA (FR Doc. 98–2214, 63 FR 4380, Airspace Docket No. 97–ACE–34). An error was subsequently discovered in the Class E airspace designation. After careful review of all available information related to the subject presented above, the FAA has determined that these corrections will not change the meaning of the action nor add any additional burden on the public beyond that already published. This action corrects those errors and confirms the effective date of the direct final rule.

The FAA uses the direct final rulemaking procedure for a non-controversial rule where the FAA believes that there will be no adverse public comment. This direct final rule advised the public that no adverse comments were anticipated, and that unless a written adverse comment, or a written notice of intent to submit such an adverse comment, were received within the comment period, the regulation would become effective on April 23, 1998. No adverse comments were received, and thus this notice confirms that this direct final rule will become effective on that date.

Correction

In rule FR Doc. 98–2214 published in the **Federal Register** on January 29, 1998, 63 FR 4380, make the following correction to the Cedar Rapids, The Eastern Iowa Airport, IA, Class E airspace designation incorporated by reference in 14 CFR 71.1:

§ 71.1 [Corrected]

On page 4381 in the third column, in the airspace designation, under ACE IA E5 Cedar Rapids, IA [Revised], in the first paragraph, in the fourth line, 269° should read 271°.

Issued in Kansas City, MO on March 5, 1998.

Bryan H. Burleson,

Acting Manager, Air Traffic Division Central Region.

[FR Doc. 98–7820 Filed 3–24–98; 8:45 am]

BILLING CODE 4910–13–M

DEPARTMENT OF HEALTH AND HUMAN SERVICES

Food and Drug Administration

21 CFR Part 101

[Docket Nos. 91N–384H and 95P–0241]

RIN 0910–AA19

Food Labeling: Nutrient Content Claims, Definition of Term: Healthy

AGENCY: Food and Drug Administration, HHS.

ACTION: Final rule.

SUMMARY: The Food and Drug Administration (FDA) is revising its food labeling regulations by amending the definition of the term ''healthy'' to permit certain processed fruits and vegetables and enriched cereal-grain products that conform to a standard of identity to bear this term. This action is being taken to provide consumers with information that will assist them in achieving their dietary goals. This action also responds to petitions submitted to the agency by the American Frozen Food Institute (AFFI), the National Food Processors Association (NFPA), and the American Bakers Association (ABA).

EFFECTIVE DATE: March 25, 1998.

FOR FURTHER INFORMATION CONTACT: Loretta A. Carey, Center for Food Safety and Applied Nutrition (HFS–158), Food and Drug Administration, 200 C St. SW., Washington, DC 20204, 202–205–5099.

SUPPLEMENTARY INFORMATION:

I. Background

In the **Federal Register** of May 10, 1994 (59 FR 24232), FDA published a final rule entitled ''Food Labeling: Nutrient Content Claims, Definition of Term: Healthy'' (hereinafter referred to as ''the healthy final rule''), which established a definition for the use of the implied nutrient content claim ''healthy'' under the Federal Food, Drug, and Cosmetic Act, as amended by the Nutrition Labeling and Education Act of 1990 (the NLEA). The regulation permits the use of the term ''healthy'' and its derivatives on the labels of individual foods, main dishes, and meal products that are particularly useful, because of their nutrient profile, in assisting consumers to construct a diet that conforms to current dietary guidelines.

The definition for ''healthy'' in § 101.65(d) (21 CFR 101.65(d)) provides that an individual food, main dish, or meal product may bear this term if: (1) It is ''low'' in fat and saturated fat; (2) its content of sodium and cholesterol does not exceed the levels for these nutrients established in the definition; and (3) it contributes at least 10 percent of the Reference Daily Intake (RDI) or Daily Reference Value (DRV) of 1 or more of the following nutrients: Vitamin A, vitamin C, calcium, iron, protein, or fiber (that is, the food must be a ''good source'' of one or more of these six nutrients). In addition, the definition provides that a food can be fortified to meet the 10 percent nutrient contribution requirement if the fortification is done in accordance with the agency's fortification policy in § 104.20 (21 CFR 104.20). The definition further provides that raw fruits and vegetables are exempt from the 10 percent nutrient contribution requirement and may bear the term provided they meet the other requirements.

Following publication of the healthy final rule, three trade associations, AFFI, NFPA, and ABA, submitted petitions to FDA (Docket Nos. 91N–384H/PRC1, 91N–384H/PRC2, and 95P–024, respectively) requesting that the agency amend the definition of ''healthy.''

Two of the petitioners, AFFI and NFPA, requested that FDA reconsider its decision to exempt only raw fruits and vegetables from the 10 percent nutrient contribution requirement. Both petitioners argued that precluding certain processed fruits and vegetables from bearing the term ''healthy,'' especially when they are nutritionally equivalent to raw fruits and vegetables, would undermine the intent of the definition for ''healthy,'' which is to assist consumers to construct a diet that conforms to current dietary guidelines. AFFI further argued in their petition that the blanching and freezing processes do not significantly change the nutrient profile of frozen fruits and vegetables. In support of this argument, AFFI presented data to FDA comparing nutrient profiles of various raw and frozen fruits and vegetables, single ingredient versions of the same fruits and vegetables.

The third petition, submitted by ABA, requested that the agency amend the definition of ''healthy'' to permit the claim on enriched cereal-grain products that conform to the standards of identity in part 136, 137, or 139 (21 CFR part 136, 137, or 139) and bread that conforms to the standard of identity for enriched bread in 21 CFR 136.115, except that it contains whole wheat or other grain products not permitted under that standard. ABA argued that most nutritional authorities agree that grain products play a central role in a healthy diet. In fact, the petitioner argued, precluding enriched cereal-grain products from bearing a ''healthy'' claim was inconsistent with the basis of the ''healthy'' claim because these foods are particularly helpful in assisting consumers to construct a diet that conforms to current dietary guidelines.

Having considered the arguments raised in the petitions, the agency tentatively concluded in the **Federal Register** of February 12, 1996 (61 FR 5349), (hereinafter referred to as ''the 1996 healthy proposal''), that certain frozen fruit and vegetable products and enriched cereal-grain products that conform to a standard of identity should not be barred from using the term ''healthy'' because these foods can be particularly useful in assisting consumers in achieving dietary goals. Accordingly, in that document, FDA proposed to amend the definition of ''healthy'' to allow frozen fruit and vegetable products comprised solely of fruits and vegetables, and enriched grain products that conform to a standard of identity in part 136, 137, or 139, that do not contain 10 percent of vitamin A, vitamin C, calcium, iron, protein, or fiber, but otherwise meet the requirement of the ''healthy'' definition, to bear the term.

Interested parties were given until April 29, 1996, to comment. FDA received approximately 100 letters in response to the proposal, each containing one or more comments, from industry, trade organizations, consumers, consumer interest groups, and academia. The comments generally supported the proposal. Several comments addressed issues outside the scope of the proposal (e.g., changing the 10 percent nutrient contribution requirement to a 5 percent requirement, revising the nutrient contribution requirement so that it is based on the caloric contribution of the food, and changing the word ''enriched'' to ''partially restored'') and they will not be discussed here. A number of comments suggested modifications and revisions in various provisions of the proposal. A summary of these comments and the agency's responses follow:

II. Comments and Agency Response

A. General Comments

1. One comment that supported the concept of extending use of the ''healthy'' claim to processed fruits and vegetables and enriched grain products contended that the exemption approach is both discriminatory and piecemeal and that a new regulation providing a rational and consistent approach should be issued.

Similarly, another comment stated that the 1996 healthy proposal would lead to inequity in the marketplace and confuse consumers. The comment asserted that the agency is creating ''regulatory chaos'' by a desire to fix a problem that in reality does not exist under the current regulations. The comment suggested that the importance of fruits and vegetables as part of a healthy diet, whether they are raw, frozen, or canned, can be highlighted on product labels under the existing regulation even if no exemption to the good source requirement is included in the rule. For example, fruit and vegetable products ineligible to bear the term ''healthy'' may bear information on general dietary guidance that promotes consumption of fruit and vegetable products as part of an overall healthy diet. Such language, in the absence of an expressed or implied claim, would not require the food bearing the label to meet the requirements of the ''healthy'' claim. The comment further asserted that the only thing the current regulation would prevent is the use of the word ''healthy'' in a nutritional context on the label to indicate that the food is, in and of itself, ''healthy.'' Neither of these comments, however, presented any alternative approaches that the agency had not considered when it first established the definition for ''healthy.''

The agency appreciates the concerns raised in the comments regarding the regulatory approach the agency is taking in this rulemaking in amending the definition of ''healthy.'' Still, it is not persuaded that this approach is discriminatory and will create regulatory chaos. To the contrary, by extending this exemption to other fruit and vegetable products and to enriched cereal-grain products that conform to a standard of identity, the agency will permit the ''healthy'' claim on products that are particularly helpful in assisting consumers to achieve dietary goals yet are currently precluded from bearing the claim because they do not contain at least 10 percent of the subject nutrients, and in many cases cannot be reformulated to do so. The agency believes that a failure to provide for these foods to bear ''healthy'' would decrease the utility of the claim in assisting consumers in achieving dietary goals. Therefore, the agency concludes that the approach it is taking in amending the definition of ''healthy'' in this rulemaking is equitable, consistent with dietary guidelines, and unlikely to confuse consumers regarding use of the term ''healthy.''

In addition, the approach that FDA is taking in this final rule is similar to the approach that it took in establishing the definition of ''healthy'' for seafood and game meats. As discussed in the 1996 healthy proposal, FDA adopted different provisions for the use of the term ''healthy'' on raw, single ingredient seafood and game meat products with regard to the amount of fat, saturated fat, and cholesterol. FDA established different provisions for these foods because, in part, they would not qualify for the claim if held to the criteria of being ''low fat'' and ''low saturated fat'' because they are inherently higher in fat and in saturated fat than many other foods, yet some are recommended by the Surgeon General and the Food and Nutrition Board as foods to include in a healthy diet. In this document, FDA is relying on the same general concept on which it based its decision to provide alternative criteria for raw, single ingredient seafood and game meats. Namely, the agency would consider it inappropriate if the requirements in the definition of ''healthy'' precluded use of the claim for fruits and vegetables and cereal-grain products, which play such an important role in the diet and that dietary guidelines recommend be included in a healthy diet, especially in cases where manufacturers do not have the flexibility to reformulate the food to qualify it to bear the claim. This regulatory approach ensures that the term ''healthy'' is used in a way that enables consumers to have confidence that the foods that bear this term will in fact be particularly useful in constructing diets that conform to dietary guidelines.

The agency acknowledges that products described in the latter comment do have other claims available to them. However, the fact that these products have other claims available to them is not an adequate basis for the agency to find that they should be precluded from bearing the term ''healthy.'' The agency believes that the more compelling argument is that in cases where the frozen or canned version of the fruit or vegetable is nutritionally comparable to the raw version of the same fruit or vegetable, and it is as beneficial as the raw version, they should be eligible to bear the ''healthy'' claim under the same conditions as the raw version. Furthermore, consumers should be informed that these foods serve as appropriate and useful alternatives to raw fruits and vegetables in assisting them in achieving their dietary goals.

B. Single Ingredient Fruit and Vegetable Products

The data that AFFI presented in supplemental comments to its petition comparing nutrient profiles of various raw fruits and vegetables and frozen, single ingredient versions of the same fruits and vegetables indicated that frozen fruits and vegetables generally are nutritionally comparable to raw fruits and vegetables. This indication is consistent with the agency's review of literature comparing raw fruits and vegetables to frozen and canned fruits and vegetables (Ref. 1). Based on a preliminary review of the AFFI data, the agency tentatively concluded in the 1996 healthy proposal that frozen, single ingredient fruits and vegetables should not be barred from bearing the term ''healthy'' because they are nutritionally comparable to raw fruits and vegetables. Moreover, like raw fruits and vegetables, they can contribute significantly to a healthy diet and to achieving compliance with dietary guidelines. Thus, the agency proposed to amend § 101.65(d)(2)(iv) to exempt frozen, single ingredient fruit and vegetable products and mixtures of frozen, single ingredient fruit and vegetable products from the 10 percent nutrient contribution requirement.

2. Some comments were opposed to exempting frozen, single ingredient fruit and vegetable products and mixtures of frozen, single ingredient fruit and vegetable products from the 10 percent nutrient contribution requirement because, the comments contended, frozen, single ingredient fruits and vegetables were nutritionally inferior to the raw fruits and vegetables. These comments argued that allowing manufacturers to label their products as ''healthy'' when the food did not contain 10 percent of one of the six listed nutrients was not a good idea because of the way that frozen fruits and vegetables were processed (e.g., blanching, trimming, washing, chopping, and freezing). One of these comments asserted that frozen food products are not comparable to raw food products because frozen products tend to diminish in quality during transportation and storage due to temperature changes. The comment contended, therefore, that frozen fruit and vegetable products should bear the term ''healthy'' only when they meet all

the requirements of the claim, including the 10 percent nutrient contribution requirement.

Many of the comments supported the proposal to exempt frozen, single ingredient fruit and vegetable products and mixtures of frozen, single ingredient fruit and vegetable products from the 10 percent nutrient contribution requirement. They agreed that these foods are nutritionally comparable to raw fruits and vegetables, can be used interchangeably in the diet with raw fruits and vegetables, can make a significant contribution to achieving dietary compliance, and the absence of a claim on frozen versions of a raw product that bears a claim could be misleading. In addition, the comments noted that the appearance of the ''healthy'' claim on frozen, single ingredient fruits and vegetables communicates something broad, powerful, and positive about the described food consistent with its role in achieving compliant diets and, therefore, would contribute to a balanced and healthful diet by encouraging increased consumption of these products in accordance with dietary guidelines.

The agency disagrees with the first comments. While those comments stated that frozen food products are nutritionally inferior to raw fruits and vegetables, they did not provide the agency with any data or other information to support their position or to cause the agency to reconsider its tentative conclusion that frozen, single ingredient fruits and vegetables are nutritionally comparable to raw fruits and vegetables and can be used interchangeably in the diet.

In efforts to evaluate the nutrient content of frozen fruits and vegetables compared to that of raw fruits and vegetables, the agency reviewed both the AFFI's supplemental data and similar data from the U.S. Department of Agriculture (USDA) (Ref. 2). The nutrient profiles of selected raw fruits and vegetables and frozen, single ingredient versions of the same fruits and vegetables revealed relatively equivalent nutrient profiles. The data reviewed by the agency did not support the argument raised in the comments that blanching and/or freezing fruits and vegetables generally reduces their nutrient content. In fact, some data showed that the nutrient content level for certain nutrients was higher in the frozen version of the food than in the raw version of the food. This is probably attributable to the fact that unprocessed (i.e., raw) fruits and vegetables may lose some of their nutrients over time under certain storage conditions (Ref. 1). Further, both sets of data supported the argument raised by the petitioners that frozen fruits and vegetables have comparable nutritional profiles when compared to the raw version. Therefore, the agency continues to believe that single ingredient frozen fruits and vegetables are nutritionally the same as raw fruits and vegetables. Moreover, these foods can contribute significantly to a healthy diet and to achieving compliance with dietary guidelines, even if particular products do not meet the 10 percent nutrient contribution requirement.

Further, based on these data, the agency concludes that because single ingredient, frozen fruit or vegetable products are nutritionally comparable to the raw versions, they would likely have the same inherent beneficial effects as the raw version. Precluding such foods from bearing the term ''healthy'' could undermine an important element of current dietary guidance, as well as the basis for the ''healthy'' claim that is to assist consumers in constructing a diet that conforms to dietary guidelines. Consumers should be informed, moreover, that these foods serve as appropriate and useful alternatives to raw fruits and vegetables in constructing diets consistent with current dietary recommendations even if the products do not meet the 10 percent nutrient contribution requirement. Therefore, the agency concludes that such foods should not be barred from bearing the term ''healthy.'' Accordingly, the agency is amending § 101.65(d) to exempt frozen, single ingredient fruit and vegetable products and mixtures of frozen, single ingredient fruits and vegetables from the 10 percent nutrient contribution requirement.

C. Multi-Ingredient Fruit and Vegetable Products

As discussed in the 1996 healthy proposal (61 FR 5349 at 5352), FDA tentatively concluded that providing an exemption for multi-ingredient fruit and vegetable products would be inconsistent with current dietary recommendations and, consequently, inconsistent with the basis of the ''healthy'' claim because such foods may increase the consumption of certain undesirable nutrients and decrease consumption of micronutrients. Thus, FDA did not propose to extend the exemption to multi-ingredient fruit and vegetable products composed of ingredients other than fruits or vegetables that do not contain at least 10 percent of one of the six listed nutrients.

3. Two comments requested that the agency reconsider its tentative position regarding the eligibility of multi-ingredient fruit and vegetable products (i.e., products that contain added oils, sodium, sauces, syrups, or similar ingredients) to bear the term ''healthy'' when the food did not meet the 10 percent nutrient contribution requirement. One comment contended that if a product contains minimal amounts of these added ingredients and the levels of fat, saturated fat, cholesterol, or sodium are not significantly increased, then the product should be granted an exemption. The comment opined that the addition of insignificant amounts of these nutrients should not cause the product to be inconsistent with the purpose of the ''healthy'' claim or incompatible with current dietary guidelines. The other comment argued that multi-ingredient fruit and vegetable products will likely be better tasting when compared to fruit and vegetable products without these ingredients and, therefore, are more likely to be selected by consumers in their efforts to meet the public health goal of increasing fruit and vegetable consumption.

The agency is not persuaded by these comments that multi-ingredient fruit and vegetable products with added oils, sodium, sauces, syrups, or similar ingredients should be exempt from the 10 percent requirement. These foods do not have the same nutrient profile as fruits or vegetables not containing these added ingredients and therefore, have the potential, when used interchangeably in the diet with such fruits or vegetables, of increasing the dietary intake of substances that dietary guidelines recommend be decreased. Consumers who rely on the appearance of the term ''healthy'' to construct a diet consistent with current dietary recommendations could be misled to believe that multi-ingredient fruit and vegetable products with added oils, sodium, sauces, syrups, or similar ingredients are just as useful and helpful as raw and single ingredient fruits and vegetables in achieving dietary goals, when in fact, they could increase dietary intake of less desirable nutrients. Furthermore, the usefulness of a food labeled ''healthy'' is not based on how it compares to a similar food (for example, in taste), but on how, because of its nutrient profile, it contributes to achieving a total diet consistent with dietary recommendations.

The agency notes that the comment suggested minimal or insignificant amounts of these ingredients be permitted. The comments, however, did not provide a basis on which the agency could establish a minimal or insignificant amount. The agency notes,

however, that manufacturers should be advised that fruit and vegetable products composed of ingredients other than fruits or vegetables can be formulated and fortified in accordance with § 104.20 to meet the 10 percent contribution requirement, and, when so formulated, a food that meets the nutrient contribution requirement as well as the other requirements of the claim can bear the term ''healthy.'' Accordingly, FDA is not exempting multi-ingredient fruit and vegetable products that contain added oils, sodium, sauces, syrups, or similar ingredients from the 10 percent nutrient contribution requirement. As discussed below, however, certain nonnutritive ingredients (i.e., ingredients that do not change the levels of macro or micronutrients in the food) may be added under certain conditions.

4. One comment stated that products that meet the standard of identity for fruit, fruit juices, and fruit products (e.g., applesauce) should also be exempt from the 10 percent nutrient contribution requirement. The comment stated that these products contribute to healthful diets. The comment contended that discriminating against apple products, in particular, would confuse consumers and discourage them from consuming fruit products such as apple slices and apple juice. The comment cited no basis for exempting these foods other than the fact that some of the foods cited in the comment met a standard of identity. The comment did not provide any data or other information to suggest which of these products were currently prohibited from bearing the ''healthy'' claim.

Nevertheless, the agency considered it prudent to review the standards of identity to ensure that fruit products conforming to a standard of identity that are particularly helpful in assisting consumers in constructing diets consistent with dietary guidelines are not unfairly precluded from bearing the term because of the provisions in the standard. Several standards of identity governing fruit products permit the optional fortification of one or more of the six listed nutrients at levels sufficient to meet the 10 percent nutrient contribution requirement. There are fruit products under standards of identity that do not provide for fortification, that are consistent with the basis of the ''healthy'' claim, and that are not covered by the exemptions issued in this final rule. The agency reviewed USDA's database (Ref. 2) to determine whether these fruit products' nutrient profiles preclude them from bearing the term. Based on this review, the agency determined that these foods have nutrient profiles that would allow them to bear the term ''healthy'' even under the current regulations without an exemption. The agency therefore concludes that a general exemption for fruit products governed by the standards of identity is not warranted.

D. Canned and Processed Fruit and Vegetable Products

The agency stated in the 1996 healthy proposal (61 FR 5349 at 5352) that if appropriate data were submitted, the agency was prepared to extend the exemption from the 10 percent nutrient contribution requirement to other single ingredient processed fruit and vegetable products. The agency solicited comments and data on the effects of other types of processing (e.g., drying and canning) and on how these processes affect the nutritional profile of fruits and vegetables.

5. Three comments requested that the agency exempt canned fruits and vegetables from the minimum nutrient contribution requirement. In support of this request, one of the comments contained data comparing the nutrient profiles of canned fruits and vegetables to raw and frozen versions of the fruits and vegetables.[1] This comment stated that an exemption should be granted for a broad category of fruit and vegetable products, including canned varieties packed in a medium that may contain other ingredients such as water, spices, flavors, or other additives that do not weaken the requirement that the food be composed solely of fruits and vegetables, for the purpose of bearing the ''healthy'' claim.

The agency has considered the requests made in the comments as well as reviewed the data submitted in each of the appendices. The data in Appendix A were obtained from laboratory analysis and directly compared nutrient levels of raw and processed versions of the subject fruit or vegetable on a per 100-gram basis. The agency considers the data in Appendix A to be the most relevant in terms of demonstrating the effects of canning on the nutritional profile of fruits and vegetables. The data in Appendix A show that fruits and vegetables that are subjected to freezing and canning processes generally maintain nutrient levels comparable to the raw version. These data were collected nearly 2 decades ago and may not be reflective of current canning technology and its effect on nutrient levels, however. Consequently, the agency reviewed the literature to assess: (1) Whether current canning technologies differ significantly from those used 20 years ago; and (2) if so, whether use of these current technologies results in processed fruits or vegetables with significantly altered nutrient levels as compared to the raw version.

This review indicates that any improvements in canning technologies that have occurred over the last 20 years have not significantly altered nutrient levels in canned foods when compared to raw food (Ref. 3). Consequently, the agency concludes that canned, single ingredient fruit and vegetable products generally have comparable nutrient profiles to the raw and frozen versions of the fruit and vegetable. Accordingly, the agency is revising proposed § 101.65(d)(2)(iv) to include canned, single ingredient fruit and vegetable products in the list of foods that are exempt from the 10 percent nutrient contribution requirement. In deciding to extend this exemption to canned, single ingredient fruit and vegetable products, the agency is acknowledging that these products are nutritionally comparable to, and as beneficial as, raw fruits and vegetables and, therefore, can be used interchangeably in the diet with raw fruits and vegetables. Consequently, these products, like frozen, single ingredient fruits and vegetables, should be permitted to bear the ''healthy'' claim under the same conditions as raw fruits and vegetables. Moreover, canned, single ingredient fruits and vegetables, like raw and frozen, single ingredient fruits and vegetables, can be particularly helpful in assisting consumers in achieving dietary goals and should not be precluded from bearing a ''healthy'' claim.

Furthermore, the agency is concerned that an inappropriate message could be sent to consumers if a ''healthy'' claim were permitted to appear on the raw or frozen version of the fruit or vegetable product but were precluded from appearing on the canned version. Such a situation might not only confuse consumers, it would also be inconsistent with the 1995 Dietary Guidelines. These guidelines state that ''the availability of fresh fruits and vegetables varies by season and region of the country, but frozen and canned vegetables ensure a plentiful supply of these healthful foods throughout the

[1] The data submitted to the agency were presented in three appendices, A, B, and C. The Appendix A data directly compared nutrient levels of several versions of the subject fruit or vegetable, including raw, frozen, and canned. The Appendix B data compared nutrient levels before and after heating of each version of the fruit or vegetable (i.e., nutrient levels of frozen products were compared to nutrient levels of frozen products that had been heated). Appendix C contained data comparing nutrient profiles of raw products that had been cooked with other versions of the fruit or vegetable that were either cooked or uncooked.

year.'' The guidelines therefore recognize that canned as well as frozen fruits and vegetables can be used interchangeably in the diet with, and are just as helpful as, raw fruits and vegetables. Moreover, consumers should be informed that these foods serve as appropriate and useful alternatives to raw fruits and vegetables in assisting them in achieving their dietary goals.

In response to the request that the agency permit the addition of ingredients such as water, spices, flavors, or other additives, the agency would not object to the addition of ingredients that do not change the level of macro or micronutrients in the food because fruits or vegetables with such added ingredients would be nutritionally comparable to the raw version and can be used interchangeably in the diet with raw versions. On the one hand, the addition of oils, sodium, sauces, syrups, and other ingredients that could change the level of nutrients, as compared to raw foods, could increase the consumption of undesirable nutrients beyond that of the raw version, as well as imply that these products have nutritional profiles comparable to the raw version, when in fact they do not. Consequently, the agency finds no basis on which fruit and vegetable products with added oils, sauces, sodium, and syrups should be exempt from the 10 percent requirement. On the other hand, fruit and vegetable products that have nonnutritive added ingredients (such as water, spices, or flavors) maintain comparable nutrient profiles to the raw versions, and, therefore, should be permitted to bear the claim under the same conditions as the raw versions. Accordingly, the agency is amending § 101.65(d)(2)(iv) from the proposal to clarify that foods comprised solely of fruits and vegetables may have added ingredients such as water, spices, flavors or other additives that do not change the level of nutrients in the food. This change from the proposal substantially lengthens the description of the exemption for frozen and canned single ingredient fruits and vegetables. The agency has therefore placed the exemptions to the 10 percent nutrient contribution requirement at the end of § 101.165(d)(2)(iv), paragraphs A through C. In addition, the agency has deleted the phrase ''per labeled serving,'' an error in the proposed codified language, from the final codified language so that the description of the 10 percent nutrient contribution itself conforms to the preexisting codified description in § 101.165(d)(2)(iv).)

6. A few comments opposed exempting canned fruits and vegetables from the 10 percent nutrient contribution requirement because, the comments argued, some canned fruits and vegetables are high in sugar and salt and should not bear the term ''healthy.''

While the agency appreciates the concerns raised in the comments, the agency notes that it is not, in this rulemaking, providing an exemption for foods containing ingredients that would increase the amount of sugar or salt beyond that occurring in the raw version of the fruit or vegetable. The agency points out, however, that not granting an exemption to these foods would not prohibit fruits and vegetables with added sugar or salt from bearing the ''healthy'' claim because such foods that contain 10 percent or more of one of the six listed nutrients, and otherwise meet the requirements for the claim, are not precluded from bearing the claim.

E. Enriched Cereal Grain Products

In the 1996 healthy proposal, FDA proposed to amend the definition of ''healthy'' in § 101.65 to exempt enriched cereal-grain products that conform to a standard of identity in part 136, 137, or 139 from the 10 percent nutrient contribution requirement. This exemption is justified because foods made in accordance with these standards are precluded from meeting the 10 percent nutrient contribution requirement and because they are the types of food that meet the basis of the ''healthy'' definition and are recommended in dietary guidelines. Foods labeled with the term ''healthy'' should be those that can be used to achieve a total diet that conforms to current dietary recommendations (see 58 FR 2944 at 2946, January 6, 1993). Current dietary guidelines recommend 6 to 11 servings of breads, cereals, rice, and pasta per day. Because most Americans do not achieve 6 to 11 servings per day, increased consumption of grain products is also recommended in dietary guidelines. The appearance of a ''healthy'' claim on enriched cereal-grain products would likely encourage consumers to select these products as part of a healthy diet. Furthermore, precluding standardized enriched cereal-grain products from bearing the term ''healthy'' may confuse consumers because they might incorrectly regard such products as not particularly beneficial in achieving diets consistent with dietary guidelines.

Comments responding to this issue (with the exception of comment 7, in section II.E of this document) supported FDA's proposal, and stated that permitting a ''healthy'' claim on enriched cereal-grain products would likely encourage consumers to select these products as part of a healthy diet. Accordingly, FDA is amending the definition of the term ''healthy'' in § 101.65(d)(2)(iv) as proposed to exempt enriched grain products that conform to a standard of identity in part 136, 137, or 139 from the 10 percent nutrient contribution requirement.

7. Two comments opined that the healthy claim should be reserved only for breads that contain flour that is 50 percent whole grain. The comments contended that breads that are made from enriched flour and do not contain at least 50 percent whole grain flour should not be labeled as ''healthy.'' The comments further contended that valuable nutrients such as the B-vitamins, vitamin E, dietary fiber, and minerals are not adequately supplied in enriched flour.

The agency disagrees with these comments. While the agency recognizes that during the milling process of wheat, the B-vitamins, vitamin E, dietary fiber and certain minerals may be lost, the enrichment requirement in the standards of identity restores several of these nutrients. Moreover, as discussed previously in section II.E of this document, standardized enriched cereal-grain products are the types of products that are consistent with the basis of the ''healthy'' claim and should not be precluded from bearing the claim. The comments are asking the agency to base the requirement to bear the ''healthy'' claim on the presence and percentage of a particular ingredient in a food rather than on the presence and percentage of particular nutrients that are important to the food's overall nutritional profile. Such an approach would require the agency to change the underlying principles of the ''healthy'' claim, which focuses on the food's overall nutritional profile. Further, it would require the agency to develop a list of ingredients that could qualify a food to bear a ''healthy'' claim. The agency believes that such an approach is neither equitable nor feasible. Consequently, the agency is not granting the comments' request that only breads containing 50 percent whole grain flour be labeled as ''healthy.''

8. Another comment stated that all breakfast cereals should be exempt from the 10 percent nutrient contribution requirement. The comment opined that the presence of the term ''healthy'' on breakfast cereals would increase their consumption that, in turn, would increase consumption of cereal-grain products. Such consumption, the comment argued, would be entirely consistent with, and supportive of, the

government's current dietary recommendations and the intent of the NLEA. The comment provided no other rationale for exempting breakfast cereals from the 10 percent requirement.

While the agency agrees that increased consumption of breakfast cereals would mean increased consumption of cereal-grain products, the agency is not persuaded that breakfast cereals should be exempt from the nutrient contribution requirement. There is no evidence to suggest that breakfast cereals as a category of foods are precluded from bearing the term because of the food's inability to meet the 10 percent requirement. On the contrary, breakfast cereals that meet the other requirements of the claim generally are a ''good source'' of at least one of the listed nutrients. Furthermore, breakfast cereals are not governed by a standard of identity and have the flexibility of modifying their formulation to meet the requirements of the claim. Consequently, FDA is not establishing an exemption for breakfast cereals.

9. A number of comments urged the agency to allow cereal-grain products that are eligible to bear a health claim to also bear the term ''healthy.'' The comments stated that these products play a major role in a healthful diet and precluding these products would confuse consumers and undermine the ability of health claims to assist consumers in making appropriate dietary choices.

The agency strongly disagrees with these comments. The agency would like to reiterate and clarify its position on this subject. The fundamental concerns that underlie a health claim are different from those that underlie the definition of ''healthy.'' FDA's goal is to define ''healthy'' in such a way that it will highlight foods that, because of their nutrient content, will be most helpful to consumers in constructing a diet that is consistent with all of the dietary recommendations. The purpose of a health claim, by contrast, is to highlight scientifically valid nutrient-disease relationships as well as foods that have a level of the substance in question such that consumption of the food may help to affect the risk of developing the disease in question. In some cases these purposes overlap, in others they do not.

Because a health claim is based on the relationship of a substance to a specific disease or health-related condition (59 FR 24232 at 24233), a product that bears a health claim may not necessarily be particularly helpful in assisting consumers in lowering their daily intake of those nutrients that are not the subject of the claim, but of which reduced daily intake has been recommended. For example, a food must be ''low fat'' to bear the claim ''healthy,'' whereas some health claims do not require the food to be ''low fat.'' The agency therefore acknowledges that there are foods that will be eligible to bear a health claim that will not be eligible to bear the term ''healthy.'' This fact is not an inconsistency in FDA's regulations because, as described above, these two claims are different and have different functions.

The comments have not persuaded the agency that FDA's goal in defining the term ''healthy'' would be met if the agency permitted a food to bear the term ''healthy'' just because it qualifies for a health claim. Therefore, FDA is not amending the definition of ''healthy'' to permit foods to bear the term simply because the food qualifies to bear a health claim. The agency notes, however, that foods that bear health claims and that meet the requirements for ''healthy'' may also bear the term ''healthy.''

III. Economic Analysis

A. Benefit/Cost Analysis

FDA has examined the impacts of this final rule under Executive Order 12866. Executive Order 12866 directs agencies to assess all costs and benefits of available regulatory alternatives and, when regulation is necessary, to select regulatory approaches that maximize net benefits (including potential economic, environmental, public health and safety effects; distributive impacts; and equity). According to Executive Order 12866, a regulatory action is ''economically significant'' if it meets any one of a number of specified conditions, including having an annual effect on the economy of $100 million or adversely affecting in a material way a sector of the economy, competition, or jobs. A regulation is considered ''significant'' under Executive Order 12866 if it raises novel legal or policy issues. FDA finds that this final rule is neither economically significant nor a significant regulatory action as defined by Executive Order 12866.

In addition, FDA has determined that this rule does not constitute a significant rule under the Unfunded Mandates Reform Act of 1995 requiring cost-benefit and other analyses. A significant rule is defined in Section 1531(a) as ''a Federal mandate that may result in the expenditure by State, local, and tribal governments in the aggregate, or by the private sector, of $100,000,000 (adjusted annually for inflation) in any 1 year * * *''.

Finally, in accordance with the Small Business Regulatory Enforcement Fairness Act of 1996, the administrator of the Office of Information and Regulatory Affairs of the Office of Management and Budget has determined that this final rule is not a major rule for the purpose of Congressional review.

FDA is proposing to permit certain processed fruits and vegetables, and enriched cereal-grain products that conform to a standard of identity to bear the term ''healthy.'' FDA has determined that these products are particularly helpful in assisting consumers to achieve dietary goals.

In the benefit/cost analysis for the proposed rule, FDA stated that the benefit of this rule is to provide more beneficial information to consumers. FDA received comments stating that the rule will have a positive impact on the demand for fruits and vegetables if it helps people to understand the relative nutritiousness of fresh versus frozen or canned produce. Several comments also stated the rule would result in health benefits if it caused consumption of fruits and vegetables to increase.

Although it is possible that this rule will have some marginal impact on the overall demand for fruits and vegetables, it is unlikely that any increase in demand that might occur would be significant. It is likely, however, that demand will shift from products that are higher in fat, sugars, and sodium, such as multi-ingredient vegetable products with added oils, to products that are lower in fat, sugars, and sodium irrespective of whether the switching that may occur is within or between product types. The real benefit of use of the term ''healthy'' depends not on whether it favors one type of product over another, but on whether it provides consumers with a tool with which they can select foods that will help to achieve dietary goals.

The costs of this regulation will be incurred only by those manufacturers desiring to take advantage of the opportunity to use the term ''healthy.'' FDA cannot predict the number of manufacturers who will take advantage of this opportunity. Therefore, the agency cannot estimate the number of labels that will be revised as a result of this rule. FDA estimates however, that, the cost of revising a label to include a ''healthy'' claim is approximately $3,000 per label.

B. Small Entity Analysis

FDA has examined the impacts of this final rule as required by the Regulatory Flexibility Act (5 U.S.C. 601–612). If a rule has a significant impact on a

substantial number of small entities, the Regulatory Flexibility Act requires agencies to analyze options that would minimize the economic impact of that rule on small entities. Under the Regulatory Flexibility Act (5 U.S.C. 605(b)), FDA certifies that this final rule will not have a significant impact on a substantial number of small entities.

FDA received one comment to the analysis of the proposed rule regarding the potential impact on small entities. The comment suggested that if consumption shifts from raw to processed produce as a result of this rule, the impact on small farmers would be detrimental.

The comment did not provide any data with which FDA could evaluate the potential for shifts in consumption from raw to processed produce or any resulting impact on small farmers. FDA notes, however, that it is unlikely that this rule would cause consumption to shift from raw to processed produce. As stated previously, the likely substitution is from those fruits and vegetables that are too high in fat or sodium to qualify for the term ''healthy'' to those raw or processed fruits and vegetables that do qualify as ''healthy.''

FDA further notes that, even if demand for processed produce increased relative to raw produce, the impact on small farmers should not be detrimental. There is no reason to expect that small farmers would not be able to sell their produce to processors if the demand for processed produce increases.

Only those processed products that would meet the current definition of the term ''healthy'' other than the minimum nutrient contribution requirement will be affected by this rule. Because there is no change in the definition as it applies to those products currently using the term, only those entities desiring to take advantage of the new exemption will bear any cost of this regulation. No firm of any size will voluntarily bear the cost of changing a label to bear the term ''healthy'' unless doing so will be advantageous to the firm. Therefore, FDA concludes that no small entity will be adversely affected by this rule.

IV. Environmental Impact

The agency has previously considered the environmental effects of this rule as announced in the proposed rule (61 FR 5349, February 12, 1996; corrected May 21, 1996 (61 FR 25421)). No new information or comments have been received that would affect the agency's previous determination that there is no significant impact on the human environment and that an environmental impact statement is not required.

V. Paperwork Reduction Act of 1995

In the 1996 healthy proposal, FDA stated its tentative conclusion that the proposed rule contains no reporting, recordkeeping, labeling or other third party disclosure requirements and asked for comments on whether the proposed rule imposed any paperwork burden. No comments were received addressing the question of paperwork burden. FDA concludes that the labeling provisions in this document are not subject to review by the Office of Management and Budget because they do not constitute a ''collection of information'' under the Paperwork Reduction Act of 1995 (44 U.S.C. 3501 *et seq.*). Rather, the labeling statements are a ''public disclosure of information originally supplied by the Federal Government to the recipient for the purpose of disclosure to the public'' (5 CFR 1320(c)(2)).

VI. References

1. Karmas, E., and R. S. Harris, ''Nutritional Evaluation of Food Processing, 3d Ed.,'' Van Nostrand Reinhold Co., Inc., New York, chapters 3, 4, and 11, 1988.

2. Satchell, F. B., Division of Programs and Enforcement Policy (HFS–158), Center for Food Safety and Applied Nutrition, memorandum to file, September 22, 1995, Modification of USDA's Nutrient Data Base for National Nutrient Databank Release No. 9, ''Processed Fruit and Vegetable Products that Qualify to Bear the Term 'Healthy','' June 17, 1994, and July 17, 1995.

3. University of Illinois at Urbana-Champaign, Department of Food Science and Human Nutrition, ''Nutrient Conservation in Canned, Frozen and Fresh Foods,'' October 1997.

List of Subjects in 21 CFR Part 101

Food labeling, Nutrition, Reporting and recordkeeping requirements.

Therefore, under the Federal Food, Drug, and Cosmetic Act and under authority delegated to the Commissioner of Food and Drugs, 21 CFR part 101 is amended as follows:

PART 101—FOOD LABELING

1. The authority citation for 21 CFR part 101 continues to read as follows:

Authority: 15 U.S.C. 1453, 1454, 1455; 21 U.S.C. 321, 331, 342, 343, 348, 371.

2. Section 101.65 is amended by revising paragraph (d)(2)(iv) to read as follows:

§ 101.65 Implied nutrient content claims and related label statements.

* * * * *

(d) * * *

(2) * * *

(iv) The food contains at least 10 percent of the Reference Daily Intake (RDI) or Daily Reference Value (DRV) per reference amount customarily consumed of vitamin A, vitamin C, calcium, iron, protein, or fiber, except for the following:

(A) Raw fruits and vegetables;

(B) Frozen or canned single ingredient fruits and vegetables and mixtures of frozen or canned single ingredient fruits and vegetables, except that ingredients whose addition does not change the nutrient profile of the fruit or vegetable may be added;

(C) Enriched cereal-grain products that conform to a standard of identity in part 136, 137, or 139 of this chapter.

* * * * *

Dated: March 18, 1998.

William B. Schultz,

Deputy Commissioner for Policy.

[FR Doc. 98–7667 Filed 3–24–98; 8:45 am]

BILLING CODE 4160–01–F

DEPARTMENT OF HEALTH AND HUMAN SERVICES

Food and Drug Administration

21 CFR Part 211

[Docket No. 75N–0339]

Human and Veterinary Drugs; Current Good Manufacturing, Processing, Packaging, or Holding; Technical Amendment

AGENCY: Food and Drug Administration, HHS.

ACTION: Final rule; technical amendment.

SUMMARY: The Food and Drug Administration (FDA) is amending the current good manufacturing practice regulations for human and veterinary drug products to correct a typographical error. This action is being taken to ensure accuracy and clarity in the agency's regulations.

EFFECTIVE DATE: March 25, 1998.

FOR FURTHER INFORMATION CONTACT: LaJuana D. Caldwell, Office of Policy (HF–27), Food and Drug Administration, 5600 Fishers Lane, Rockville, MD 20857, 301–443–2994.

SUPPLEMENTARY INFORMATION: FDA has discovered that an error has become incorporated into the agency's current good manufacturing practice regulations for human and veterinary drug products. In an amendment to 21 CFR 211.84, published on September 29, 1978 (43 FR 45014), the word ''date'' was inadvertently misspelled as ''data''. This document corrects that error. Publication of this document constitutes final action under the Administrative Procedure Act (5 U.S.C. 553). FDA has

determined that notice and public comment are unnecessary because this amendment is nonsubstantive.

List of Subjects in 21 CFR Part 211

Drugs, Labeling, Laboratories, Packaging and containers.

Therefore, under the Federal Food, Drug, and Cosmetic Act and under authority delegated to the Commissioner of Food and Drugs, 21 CFR part 211 is amended as follows:

PART 211—CURRENT GOOD MANUFACTURING PRACTICE FOR FINISHED PHARMACEUTICALS

1. The authority citation for 21 CFR part 211 continues to read as follows:

Authority: 21 U.S.C. 321, 351, 352, 355, 356, 357, 360b, 371, 374.

§ 211.84 [Corrected]

2. Section 211.84 *Testing and approval or rejection of components, drug product containers, and closures* is amended in paragraph (c)(5) by removing the word ''data'' and by adding in its place the word ''date''.

Dated: March 16, 1998.

William K. Hubbard,

Associate Commissioner for Policy Coordination.

[FR Doc. 98–7666 Filed 3–24–98; 8:45 am]

BILLING CODE 4160–01–F

DEPARTMENT OF HEALTH AND HUMAN SERVICES

Food and Drug Administration

21 CFR Part 558

New Animal Drugs For Use In Animal Feeds; Bambermycins; Technical Amendment

AGENCY: Food and Drug Administration, HHS.

ACTION: Final rule; technical amendment.

SUMMARY: The Food and Drug Administration (FDA) is amending the animal drug regulation for bambermycins to correct several cross-references in that regulation. In approving a new animal drug application (NADA) filed by Hoechst Roussel Vet, FDA failed to amend certain cross-references to conform to amendments in the approval document and to provide certain other cross-references. This document provides for those conforming amendments and cross-references.

EFFECTIVE DATE: March 25, 1998.

FOR FURTHER INFORMATION CONTACT: David L. Gordon, Center for Veterinary Medicine (HFV–6), Food and Drug Administration, 7500 Standish Pl., Rockville, MD 20855, 301–594–1739.

SUPPLEMENTARY INFORMATION: In amending the bambermycins regulation to reflect approval of Hoechst Roussel Vet's NADA 141–034 (use of bambermycins Type A medicated articles to make Type C medicated cattle feeds), FDA amended § 558.95 (21 CFR 558.95) by redesignating paragraph (b) as paragraph (d) (see 62 FR 8373, February 25, 1997), but failed to amend the cross-references in paragraph (a). Furthermore, in approving NADA 141–034 to establish several added uses in § 558.95(b)(4) (currently § 558.95(d)(4)) (see 59 FR 15624, April 4, 1994 and 61 FR 43654, August 26, 1996), FDA failed to provide reference in paragraph (a)(5) to uses in paragraphs (b)(4)(ii) and (b)(4)(iii) (current paragraphs (d)(4)(ii) and (d)(4)(iii)). Section 558.95 is amended by revising paragraph (a), by revising the cross-references to paragraphs (d)(1), (d)(2), (d)(3), and (d)(4), as appropriate, and by expanding those references in paragraph (a)(5) to reflect all uses in paragraph (d)(4).

List of Subjects in 21 CFR Part 558

Animal drugs, Animal feeds.

Therefore, under the Federal Food, Drug, and Cosmetic Act and under authority delegated to the Commissioner of Food and Drugs and redelegated to the Center for Veterinary Medicine, 21 CFR part 558 is amended as follows:

PART 558—NEW ANIMAL DRUGS FOR USE IN ANIMAL FEEDS

1. The authority citation for 21 CFR part 558 continues to read as follows:

Authority: 21 U.S.C. 360b, 371.

2. Section 558.95 is amended by revising paragraph (a) to read as follows:

§ 558.95 Bambermycins.

(a) *Approvals.* To sponsors identified by drug labeler codes in § 510.600(c) of this chapter for use of bambermycins Type A medicated articles as bambermycins activity per pound in paragraph (d) of this section as follows:

(1) To 012799: 2, 4, and 10 grams for use as in paragraphs (d)(1), (d)(2), (d)(3), and (d)(4) of this section.

(2) To 012799: 0.4 gram for use as in paragraph (d)(2) of this section.

(3) To 011490: 0.4 and 2 grams for use as in paragraph (d)(2) of this section.

(4) To 012286, 016968, and 017790: 0.4 and 2 grams for use as in paragraph (d)(2) and 2 grams for use as in paragraph (d)(3) of this section.

(5) To 012799: 10 grams to make 40 to 800 grams per ton Type B feed for use as in paragraph (d)(4) of this section.

* * * * *

Dated: March 12, 1998.

Andrew J. Beaulieau,

Acting Director, Office of New Animal Drug Evaluation, Center for Veterinary Medicine.

[FR Doc. 98–7699 Filed 3–24–98; 8:45 am]

BILLING CODE 4160–01–F

DEPARTMENT OF THE TREASURY

31 CFR Part 2

National Security Information

AGENCY: Department of the Treasury.

ACTION: Final rule.

SUMMARY: This rule revises regulatory text that identifies, by position title, senior Treasury officials authorized to originally or derivatively classify national security information under Executive Order 12958. These designations are now contained in Treasury Order 102–19, which is published in the **Federal Register**. This order will be updated as necessary to revise the designations of officials who have been delegated by the Secretary of the Treasury the authority to classify originally or derivatively national security information.

EFFECTIVE DATE: March 25, 1998.

FOR FURTHER INFORMATION CONTACT: Robert A. McMenamin, Assistant Director (Information and Physical Security), Department of the Treasury, Office of Security, Room 3210 Annex, 1500 Pennsylvania Avenue, NW, Washington, D.C. 20220, (202) 622–1120.

SUPPLEMENTARY INFORMATION: This rule removes the specific designations of Treasury officials authorized to originally and derivatively classify national security information under Executive Order 12958 and previous Orders. The designation of such officials is now made by a Treasury Order that will be revised from time to time as may be necessary. This rule reduces costs by making it unnecessary to revise periodically the regulations in part 2.

Because this rule relates to agency management and personnel, notice and public procedure and a delayed effective date are not required pursuant to 5 U.S.C. 553(a)(2) and the provisions of Executive Order 12866 do not apply. Because notice and public procedure is not required, the provisions of the Regulatory Flexibility Act (5 U.S.C. 601 et seq.) do not apply.

List of Subjects in 31 CFR Part 2

Classified information, Reporting and recordkeeping requirements.

For the reasons set forth above, 31 CFR Part 2 is amended as set forth below.

PART 2—NATIONAL SECURITY INFORMATION

1. The authority citation for part 2 is revised to read as follows:

Authority: 31 U.S.C. 321; E.O. 12958, 60 FR 19825, 3 CFR, 1995 Comp., p. 333.

2. Section 2.2 is revised to read as follows:

§ 2.2 Classification Authority.

Designations of original classification authority for national security information are contained in Treasury Order (TO) 102–19 (or successor order), which is published in the **Federal Register**. The authority to classify inheres within the office and may be exercised by a person acting in that capacity. There may be additional redelegations of original classification authority made pursuant to TO 102–19 (or successor order). Officials with original classification authority may derivatively classify at the same classification level.

3. Section 2.9 is revised to read as follows:

§ 2.9 Derivative Classification Authority.

Designations of derivative classification authority for national security information are contained in Treasury Order 102–19 (or successor order). The authority to derivatively classify inheres within the office and may be exercised by a person acting in that capacity. There may be additional redelegations of derivative classification authority made pursuant to TO 102–19 (or successor order). Officials identified in Treasury Order 102–19 (or successor order) may also administratively control and decontrol sensitive but unclassified information using the legend ''Limited Official Use'' and may redelegate their authority to control and decontrol. Such redelegations shall be in writing on TD F 71–01.20 ''Designation of Controlling/Decontrolling Officials'' (or successor form).

Robert E. Rubin,

Secretary of the Treasury.

[FR Doc. 98–7680 Filed 3–24–98; 8:45 am]

BILLING CODE 4810–25–M

ENVIRONMENTAL PROTECTION AGENCY

40 CFR Part 52

[FRL–5977–5]

Approval and Promulgation of Implementation Plans; Colorado; Correction

AGENCY: Environmental Protection Agency (EPA).

ACTION: Final rule.

SUMMARY: EPA is promulgating corrections to the State Implementation Plan (SIP) for the State of Colorado. First, EPA is correcting its January 21, 1997 rulemaking in which EPA approved several Colorado new source review (NSR) SIP revisions. Specifically, pursuant to a December 17, 1996 request from the state of Colorado, EPA is removing from the approved SIP two sections of Colorado's prevention of significant deterioration (PSD) rules in Regulation No. 3. EPA is also disapproving a provision in the State's definition of ''Federally enforceable'' in Regulation No. 3 that EPA inadvertently failed to disapprove in its January 21, 1997 rulemaking. The provision in that definition which is being disapproved states that provisions which are not required by the Federal Clean Air Act (Act) shall not be submitted as part of the SIP and shall not be federally enforceable. This provision is being disapproved because the Act provides that any provision approved by EPA as part of the SIP is federally enforceable unless and until the State requests, and EPA approves, a SIP revision removing such provision.

Second, EPA is correcting an October 5, 1979 rulemaking in which EPA incorrectly listed Colorado House Bill 1109 as being approved as part of the Colorado SIP.

Last, EPA is correcting a September 23, 1980 rulemaking, in which EPA mistakenly replaced a Colorado SIP approval in 40 CFR 52.320 with a Montana SIP approval.

EPA proposed these corrections for public comment on December 17, 1997, and no comments were received within the 30-day public comment period.

EFFECTIVE DATE: This rule is effective on April 24, 1998.

ADDRESSES: Copies of the documents relative to this action are available for inspection during normal business hours at the Air Program, Environmental Protection Agency, Region VIII, 999 18th Street, suite 500, Denver, Colorado 80202–2466 and The Air and Radiation Docket and Information Center, 401 M Street, SW., Washington, DC 20460.

FOR FURTHER INFORMATION CONTACT: Vicki Stamper, EPA Region VIII, at (303) 312–6445.

SUPPLEMENTARY INFORMATION: On December 17, 1997, EPA proposed several corrections to previous Colorado SIP approvals (62 FR 66046–49). EPA received no public comments on the proposed actions within the 30-day public comment period. EPA received one comment letter, from the Colorado Air Pollution Control Division (APCD), after the close of the public comment period. EPA discusses the APCD's comment letter in section I.B. of this notice. The APCD's comment letter does not warrant any change to the proposed action. Therefore, EPA is promulgating the corrections to the Colorado SIP as proposed in the December 17, 1997 **Federal Register**. The following provides background information on the specific corrections being made to the Colorado SIP and EPA's justification for these corrections:

I. Corrections to EPA's January 21, 1997 Rulemaking

On January 21, 1997, EPA promulgated approval of five Colorado SIP revisions submitted on November 12, 1993, August 25, 1994, September 29, 1994, November 17, 1994, and January 29, 1996. (See 62 FR 2910–2914.) All of these SIP submittals contained revisions to the State's NSR and PSD provisions in Parts A and B of Colorado Regulation No. 3.

A. Correction to Exclude Sections V.B. and VII.A.5. of Part B of Colorado Regulation No. 3 From the SIP

Although the State's November 12, 1993 submittal discussed above only included a few changes to the State's construction permitting requirements, the State submitted its construction permitting regulations (including its PSD rules) in their entirety because the State had also restructured and renumbered Regulation No. 3 in this submittal. Subsequently, on December 17, 1996, the State submitted a request to exclude two sections of Part B of Regulation No. 3 from its November 12, 1993 SIP submittal, specifically Sections V.B. and VII.A.5. (referred to herein as Sections V.B. and VII.A.5. or as ''the two provisions.'') On January 21, 1997, EPA's approval of the State's November 12, 1993 SIP submittal was published (62 FR 2910). The approval did not exclude Sections V.B. and VII.A.5.

Section V.B. of Part B of Regulation No. 3 applies the Class I sulfur dioxide PSD increment to certain pristine areas

in Colorado that are not designated Class I by the Federal PSD regulations. This is not required by the Act or Federal PSD regulations. Section VII.A.5. of Part B of Regulation No. 3 provides that no new major stationary source or major modification shall individually consume more than 75% of an applicable increment. No such provision (or similar provision) is required by the Act or Federal PSD regulations. Neither of the two provisions is necessary for the State to demonstrate attainment and/or maintenance of the National Ambient Air Quality Standards (NAAQS). Therefore, EPA believes that these two provisions may be removed from the SIP.

In this instance, EPA believes it is appropriate to remove the two provisions from the SIP pursuant to EPA's authority under section 110(k)(6) of the Act. Section 110(k)(6) of the Act provides as follows:

> Whenever the Administrator determines that the Administrator's action approving, disapproving, or promulgating any plan or plan revision (or part thereof), area designation, redesignation, classification, or reclassification was in error, the Administrator may in the same manner as the approval, disapproval, or promulgation revise such action as appropriate without requiring any further submission from the State. Such determination and the basis thereof shall be provided to the State and public.

The State submitted its request well before EPA's final approval of the State's November 12, 1993 SIP submittal was published in the **Federal Register** or was otherwise announced to the public. Thus, EPA had an opportunity to exclude the two provisions from the final published rule, but failed to do so.

Although there may be instances where a request to withdraw components of a SIP implicates the Act's requirement for State notice and hearing, EPA does not believe this is one of them. First, these two provisions had been part of the State's regulations for many years,[1] but had been expressly excluded from the State's SIP submittals of prior PSD revisions and had been expressly excluded from EPA's rulemaking actions on those prior PSD rule revisions. (See 51 FR 31125, September 2, 1986, and 56 FR 12850, March 28, 1991.) Second, the State merely renumbered these two provisions at its July 15, 1993 hearing, and there was no indication that the State intended to change course and submit these two provisions to EPA for approval into the SIP. Presumably, if the State had intended such a change in course, the State would have focused its notice and public hearing on the two provisions prior to adopting the renumbering of Regulation No. 3 and submitting it to EPA. This did not occur, and the evidence suggests that submittal of these two provisions to EPA was merely an oversight. If EPA had reviewed the circumstances more carefully when it received the State's December 17, 1996 letter, EPA could have corrected its final rule before publication.

With respect to Section V.B., EPA also believes a correction is necessary because Section V.B. (which, as stated above, applies the Class I sulfur dioxide increment to certain pristine Class II areas in Colorado) is inconsistent with the requirements of EPA's PSD regulations. Specifically, 40 CFR 51.166(g) contains certain requirements for redesignating an area from Class II to Class I, and the State has not addressed those requirements for the areas listed in Section V.B. Thus, EPA erred in approving Section V.B. as part of the SIP. This position is consistent with EPA's prior rulemaking regarding this provision. In a September 2, 1986 action, EPA did not approve this provision into the SIP, explaining that the State had not followed the specific procedures outlined in 40 CFR 51.166(g) for redesignating an area from Class II to Class I. (See 51 FR 31125.)

For the reasons discussed above, EPA is correcting its January 21, 1997 SIP approval to remove Sections V.B. and VII.A.5. of Part B of Regulation No. 3 from the approved SIP.

B. Correction to Disapprove Provision in Definition of ''Federally Enforceable'' in Colorado Regulation No. 3

In the State's September 29, 1994 SIP submittal of revisions to Regulation No. 3, the State revised its definition of ''Federally Enforceable'' in Section I.B.22. of Part A of Colorado Regulation No. 3. EPA's nonattainment NSR and PSD permitting regulations in 40 CFR 51.165 and 51.166, respectively, require this term to be defined in States' permitting programs, as it is used in various definitions and provisions of the Federal preconstruction permitting regulations.

Colorado's definition of ''Federally enforceable'' basically mirrors the Federal definition in 40 CFR 51.165(a)(1)(xiv) and 51.166(b)(17). However, on August 18, 1994, the State revised this definition (among other things) to add a provision stating the following: ''Notwithstanding the foregoing, and except for the voluntarily accepted limitations and conditions described in the preceding sentence, any provision, standard, or regulation that is not required by the Federal Act or that is more stringent than the Federal Act is adopted under powers reserved to the State of Colorado pursuant to section 116 of the Federal Act, is not to be submitted to the EPA as a provision of the SIP and shall not be federally enforceable.'' (Referred to hereafter as the ''quoted language.'') According to the State, this revision was made to mirror the definition found in Section 25–7–105.1 of the Colorado Air Pollution Prevention and Control Act.

During the State's public comment period on this regulatory change, EPA stated in an August 12, 1994 letter that it could not approve the quoted language as part of the SIP. Any provision that has been submitted by the State and approved by EPA as part of the SIP is considered to be Federally enforceable regardless of whether it is required by the Act or more stringent than the Act. Similarly, terms and conditions incorporated into a permit that is issued under an EPA-approved permitting program, such as new source review or title V operating permits, are also generally considered to be Federally enforceable.[2] The only way a State can change the Federal enforceability of any provision that has been approved by EPA as part of the SIP is by submitting a request for revision to the SIP and by receiving EPA approval of the SIP revision (through notice and comment rulemaking via the **Federal Register**).

EPA believes the quoted language is thus misleading to the public and the regulated community.

As noted earlier in this notice, EPA received one comment letter, from the Colorado Air Pollution Control Division (APCD), after the close of the public comment period.[3] In its comment letter, the APCD objects to EPA's proposal to disapprove the quoted language. The APCD comments that EPA does not have the authority to expand the scope

[1] The Colorado Air Quality Control Commission originally adopted Section V.B. on March 10, 1983 and Section VII.A.5. on May 17, 1990.

[2] States can designate certain provisions in a title V permit that have not been approved as part of the SIP or that are not otherwise Federally enforceable or Federally required as ''State-only'' in a title V operating permit, and those terms would not be considered Federally enforceable. [See 40 CFR 70.6(b)(2).]

[3] The APCD did not explain why it was submitting comments after the deadline for comments, nor did it request an extension of the comment period. EPA does not believe it has a legal obligation to consider or respond to this late comment letter as part of this rulemaking action. Nonetheless, because doing so will not significantly delay EPA's final rulemaking action in this matter, EPA is providing this brief response to the APCD's letter. EPA has provided a separate response in a letter to the APCD.

of a SIP submittal by turning State-only provisions into Federally-enforceable provisions and that EPA's disapproval of the quoted language may preclude the State from submitting State-only provisions to EPA for the purpose of providing complete information about the State program.

As to these assertions, the APCD does not explain how EPA's disapproval of the quoted language would turn State-only provisions in a SIP submittal into Federally-enforceable provisions. The State remains free to explicitly identify State-only measures in a SIP submittal and provide them to EPA for informational purposes only. EPA has not approved such measures into the SIP in the past and does not intend to do so in the future because EPA does not consider such measures to be part of the official SIP submittal. EPA's disapproval of the quoted language will not change EPA's approach to explicitly-identified State-only measures in SIP submittals. Similarly, EPA's disapproval of the quoted language will not give EPA the authority to approve, into the Federally enforceable SIP, measures the State has not submitted to EPA or force the State to submit measures that it would not otherwise submit.

On the other hand, if the quoted language remains part of the approved SIP, some may mistakenly believe that it renders unenforceable by EPA a measure the Governor has asked EPA to approve and EPA has approved into the SIP, simply because the measure is not required by the Clean Air Act or is more stringent than Federally required. Such an interpretation is inconsistent with the Clean Air Act (e.g., sections 110, 113, and 304 of the Act), and relevant case law. See, e.g., *Union Elec. Co.* v. *E.P.A.*, 96 S.Ct. 2518 (1976). Also, under such an interpretation, the quoted language would make it impossible for the general public, the regulated community, or EPA to have any certainty regarding the contents of the Federally enforceable SIP in Colorado. This result would clearly be contrary to Congressional intent. Thus, EPA feels compelled to disapprove the quoted language. The APCD's comments offer no reason for EPA to change its position on this matter.

In EPA's January 21, 1997 rulemaking, EPA approved the definition of ''Federally enforceable'' into the SIP in its entirety. (See 62 FR 2914.) However, for the reasons discussed above and in EPA's August 12, 1994 letter to the State, EPA believes its approval of the quoted language was made in error. Consequently, EPA is correcting its January 21, 1997 rulemaking by disapproving the language in the State's definition of ''Federally enforceable'' which states that any provision, standard or regulation not required by the Act is not to be submitted as part of the SIP and shall not be Federally enforceable. EPA is making this correction pursuant to section 110(k)(6) of the Act. Because the quoted language is not required by the Act and will not affect the State's ability to implement its permit program, EPA's disapproval of the quoted language will not start any sanctions or Federal implementation plan clocks.

II. Correction of October 5, 1979 Rulemaking

On October 5, 1979, EPA approved several submittals from the State of Colorado, which were made pursuant to the 1977 revisions to the Act. (See 44 FR 57401–57411.) In that action, EPA listed House Bill 1109 in 40 CFR 52.320(c)(14)as one of the submittals being approved (see 44 FR 57409, October 5, 1979). House Bill 1109 repealed and reenacted the State's Air Quality Control Act. The bill was signed into law by the Governor on June 20, 1979 and submitted to EPA on July 23, 1979, along with House Bill 1090 (regarding burning of solid wastes) and Senate Bill 1 (regarding provisions for reducing motor vehicle emissions). In the preamble to the October 5, 1979 rulemaking, EPA discussed the State's July 23, 1979 submittal of the three bills. EPA indicated that it was taking no action on House Bill 1109 at that time and would propose action in the **Federal Register** at a future date to take public comment on the acceptability of the State's revised Air Quality Control Act (see 44 FR 57403). Since EPA clearly stated in the preamble that it was not taking action on House Bill 1109, EPA erred in listing House Bill 1109 as being approved as part of the SIP in 40 CFR 52.320(c)(14). Therefore, pursuant to section 110(k)(6) of the Act, EPA is correcting the regulatory text regarding the State's July 23, 1979 submittal to remove the reference to House Bill 1109.[4]

Although EPA's October 5, 1979 rulemaking indicated that EPA would propose action on House Bill 1109 at a future date, EPA no longer believes it is necessary to take action on House Bill 1109 or any successor provisions in the State's Air Quality Control Act. Generally, EPA does not believe it is necessary to approve State authorizing legislation into the SIP. Instead, EPA needs to be satisfied that such authorizing legislation exists and that it shows that the State has adequate legal authority to adopt, implement, and enforce the SIP. Therefore, EPA will not be taking action on House Bill 1109.

III. Correction of September 23, 1980 Rulemaking

On September 23, 1980, EPA approved various SIP submittals from the State of Montana intended to address the 1977 revisions to the Act. In that action, EPA mistakenly revised 40 CFR 52.320, which identifies SIP approvals for the State of Colorado, to reflect approval of these various Montana SIP submittals (see 45 FR 62984). EPA's original intention with the September 23, 1980 rulemaking was to revise 40 CFR 52.1370(c)(8) for the State of Montana's plan, but EPA promulgated the language regarding Montana's SIP at 40 CFR 52.320(c)(8). On June 30, 1982, EPA partially corrected this error for Montana by promulgating the September 23, 1980 approval at 40 CFR 52.1370(c)(10). (See 47 FR 28373.) However, no correction was ever made to the ''Identification of Plan'' for Colorado at 40 CFR 52.320. Consequently, EPA is amending 40 CFR 52.320(c)(8) to reinstate the previous Colorado SIP approval promulgated at 52.320(c)(8), as it was last revised on March 2, 1976 (see 41 FR 8958).

IV. Final Action

EPA is revising 40 CFR 52.320(c)(72)(i)(D) to exclude Sections V.B. and VII.A.5. of Part B of Regulation No. 3, which pertain to the State's PSD program, from the approved SIP.

EPA is correcting its January 21, 1997 approval of Section I.B. of Part A of Regulation No. 3 (as in effect on September 30, 1994) to disapprove the last sentence in the definition of ''Federally enforceable'' which states that any provision, standard or regulation not required by the Act is not to be submitted as part of the SIP and shall not be Federally enforceable.

EPA is amending 40 CFR 52.320(c)(15) to remove the reference to House Bill 1109, which was incorrectly listed as being approved in EPA's October 5, 1979 Colorado rulemaking (see 44 FR 57409).

Last, EPA is amending 40 CFR 52.320(c)(8) to reinstate the Colorado SIP approval promulgated on March 2, 1976 (see 41 FR 8958) that was incorrectly replaced in a September 23, 1980 rulemaking (45 FR 62984).

EPA is making these corrections pursuant to section 110(k)(6) of the Act.

[4] Note that the provision in 40 CFR 52.320(c)(10) promulgated on October 5, 1979 was renumbered as 40 CFR 52.320(c)(15) on June 27, 1980. See 45 FR 43411.

Nothing in this action should be construed as permitting or allowing or establishing a precedent for any future request for revision to any SIP. Each request for revision to a SIP shall be considered separately in light of specific technical, economic, and environmental factors and in relation to relevant statutory and regulatory requirements.

V. Administrative Requirements

A. Executive Order 12866

The Office of Management and Budget (OMB) has exempted this regulatory action from E.O. 12866 review.

B. Regulatory Flexibility Act

Under the Regulatory Flexibility Act, 5 U.S.C. 600, *et seq.*, EPA must prepare a regulatory flexibility analysis assessing the impact of any proposed or final rule on small entities. 5 U.S.C. 603 and 604. Alternatively, EPA may certify that the rule will not have a significant impact on a substantial number of small entities. Small entities include small businesses, small not-for-profit enterprises, and government entities with jurisdiction over populations of less than 50,000.

The corrections promulgated herein remove certain provisions from the SIP. However, regardless of EPA's final action, these provisions still apply as a matter of State law, and thus, EPA's action does not affect any existing requirements applicable to small entities. Also, EPA's action does not impose any new Federal requirements. Therefore, EPA certifies that this correction action does not have a significant impact on a substantial number of small entities.

C. Unfunded Mandates

Under section 202 of the Unfunded Mandates Reform Act of 1995 (''Unfunded Mandates Act''), signed into law on March 22, 1995, EPA must prepare a budgetary impact statement to accompany any proposed or final rule that includes a Federal mandate that may result in estimated costs to State, local, or tribal governments in the aggregate; or to the private sector, of $100 million or more. Under section 205, EPA must select the most cost-effective and least burdensome alternative that achieves the objectives of the rule and is consistent with statutory requirements. Section 203 requires EPA to establish a plan for informing and advising any small governments that may be significantly or uniquely impacted by the rule.

EPA has determined that the corrections promulgated do not include a Federal mandate that may result in estimated costs of $100 million or more to either State, local, or tribal governments in the aggregate, or to the private sector. This Federal action imposes no new requirements. Accordingly, no additional costs to State, local, or tribal governments, or to the private sector, result from this action.

D. Submission to Congress and the General Accounting Office

The Congressional Review Act, 5 U.S.C. 801 *et seq.*, as added by the Small Business Regulatory Enforcement Fairness Act of 1996, generally provides that before a rule may take effect, the agency promulgating the rule must submit a rule report, which includes a copy of the rule, to each House of the Congress and to the Comptroller General of the United States. EPA will submit a report containing this rule and other required information to the U.S. Senate, the U.S. House of Representatives, and the Comptroller General of the United States prior to publication of the rule in the **Federal Register**. This rule is not a ''major rule'' as defined by 5 U.S.C. 804(2).

E. Petitions for Judicial Review

Under section 307(b)(1) of the Clean Air Act, petitions for judicial review of this action must be filed in the United States Court of Appeals for the appropriate circuit by May 26, 1998. Filing a petition for reconsideration by the Administrator of this final rule does not affect the finality of this rule for the purposes of judicial review nor does it extend the time within which a petition for judicial review must be filed, and shall not postpone the effectiveness of such rule or action. This action may not be challenged later in proceedings to enforce its requirements (see section 307(b)(2)).

List of Subjects in 40 CFR Part 52

Environmental protection, Air pollution control, Incorporation by reference, Intergovernmental relations, Particulate matter, Reporting and recordkeeping requirements.

Dated: March 5, 1998.

William P. Yellowtail,

Regional Administrator, Region VIII.

40 CFR part 52 is amended as follows:

PART 52—[AMENDED]

1. The authority citation for part 52 continues to read as follows:

Authority: 42 U.S.C. 7401 *et seq.*

Subpart G—Colorado

2. Section 52.320 is amended by revising paragraphs (c)(8), (c)(15), and (c)(72)(i)(D) to read as follows:

§ 52.320 Identification of plan.

* * * * *

(c) * * *

(8) On June 7, 1974, the Governor submitted five Air Quality Maintenance Area designations.

* * * * *

(15) On July 23, 1979, the Governor submitted House Bill 1090 and Senate Bill 1 as part of the plan.

* * * * *

(72) * * *

(i) * * *

(D) Regulation No. 3, Air Contaminant Emissions Notices, 5 CCR 1001–5, revisions adopted 8/18/94, effective 9/30/94, as follows: Part A (with the exception of the last sentence in the definition of ''Federally enforceable'' in Section I.B.22 and with the exception of Section IV.C.) and Part B (with the exception of Sections V.B. and VII.A.5.). This version of Regulation No. 3, as incorporated by reference here, supersedes and replaces all versions of Regulation No. 3 approved by EPA in previous actions.

* * * * *

[FR Doc. 98–7640 Filed 3–24–98; 8:45 am]

BILLING CODE 6560–50–P

ENVIRONMENTAL PROTECTION AGENCY

40 CFR Part 180

[OPP–300632; FRL–5779–3]

RIN 2070–AB78

Titanium Dioxide; Exemption from the Requirement of a Tolerance

AGENCY: Environmental Protection Agency (EPA).

ACTION: Final rule.

SUMMARY: This regulation establishes an exemption from the requirement of a tolerance for residues of titanium dioxide when used as an inert ingredient (UV protectant) in microencapsulated formulations of lambda-cyhalothrin. Zeneca AgProducts requested this tolerance exemption under the Federal Food, Drug and Cosmetic Act (FFDCA), as amended by the Food Quality Protection Act of 1996 (Pub. L. 104–170).

DATES: This regulation is effective March 25, 1998. Objections and requests for hearings must be received by EPA on or before April 24, 1998.

ADDRESSES: Written objections and hearing requests, identified by the docket control number, [OPP–300632], must be submitted to: Hearing Clerk (1900), Environmental Protection Agency, Rm. M3708, 401 M St., SW., Washington, DC 20460. Fees accompanying objections and hearing requests shall be labeled ''Tolerance Petition Fees'' and forwarded to: EPA Headquarters Accounting Operations Branch, OPP (Tolerance Fees), P.O. Box 360277M, Pittsburgh, PA 15251. A copy of any objections and hearing requests filed with the Hearing Clerk identified by the docket control number, [OPP–300632], must also be submitted to: Public Information and Records Integrity Branch, Information Resources and Services Division (7502C), Office of Pesticide Programs, Environmental Protection Agency, 401 M St., SW., Washington, DC 20460. In person, bring a copy of objections and hearing requests to Rm. 119, CM 1B2, 1921 Jefferson Davis Hwy., Arlington, VA.

A copy of objections and hearing requests filed with the Hearing Clerk may also be submitted electronically by sending electronic mail (e-mail) to: opp-docket@epamail.epa.gov. Copies of objections and hearing requests must be submitted as an ASCII file avoiding the use of special characters and any form of encryption. Copies of objections and hearing requests will also be accepted on disks in WordPerfect 5.1/6.1 file format or ASCII file format. All copies of objections and hearing requests in electronic form must be identified by the docket control number [OPP–300632]. No Confidential Business Information (CBI) should be submitted through e-mail. Electronic copies of objections and hearing requests on this rule may be filed online at many Federal Depository Libraries.

FOR FURTHER INFORMATION CONTACT: By mail: Indira Gairola, Registration Division (7505W), Office of Pesticide Programs, Environmental Protection Agency, 401 M St., SW., Washington, DC 20460. Office location, telephone number, and e-mail address: 4th Floor, Crystal Station 1B1, 2800 Crystal Drive,, Arlington, VA, 22202, (703)–308–8371, e-mail: gairola.indira@epamail.epa.gov.

SUPPLEMENTARY INFORMATION: In the **Federal Register** of June 20, 1997 (62 FR 33641) (FRL–5723–7), EPA issued a notice pursuant to section 408 of the Federal Food, Drug, and Cosmetic Act (FFDCA), 21 U.S.C. 346a(e) announcing the filing of a pesticide petition (PP 6E4675) for a tolerance exemption by Zeneca Ag. Products, 1800 Concord Pike, P.O Box 15458, Wilmington, DE 19850–5458. This notice included a summary of the petition prepared by Zeneca Ag. Products, the petitioner. There were no comments received in response to the notice of filing.

The petition requested that 40 CFR 180.1001 (d) be amended by establishing an exemption from the requirement of a tolerance for residues of the inert ingredient titanium dioxide, when used as an inert ingredient (UV protectant) in microencapsulated formulations of lambda-cyhalothrin applied to growing crops.

I. Risk Assessment and Statutory Findings

New section 408(b)(2)(A)(i) of the FFDCA allows EPA to establish a tolerance (the legal limit for a pesticide chemical residue in or on a food) only if EPA determines that the tolerance is ''safe.'' Section 408(b)(2)(A)(ii) defines ''safe'' to mean that ''there is a reasonable certainty that no harm will result from aggregate exposure to the pesticide chemical residue, including all anticipated dietary exposures and all other exposures for which there is reliable information.'' This includes exposure through drinking water and in residential settings, but does not include occupational exposure. Section 408(b)(2)(C) requires EPA to give special consideration to exposure of infants and children to the pesticide chemical residue in establishing a tolerance and to ''ensure that there is a reasonable certainty that no harm will result to infants and children from aggregate exposure to the pesticide chemical residue. . . .''

EPA performs a number of analyses to determine the risks from aggregate exposure to pesticide residues. First, EPA determines the toxicity of pesticides based primarily on toxicological studies using laboratory animals. These studies address many adverse health effects, including (but not limited to) reproductive effects, developmental toxicity, toxicity to the nervous system, and carcinogenicity. Second, EPA examines exposure to the pesticide through the diet (e.g., food and drinking water) and through exposures that occur as a result of pesticide use in residential settings.

II. Aggregate Risk Assessment and Determination of Safety

Consistent with section 408(b)(2)(D), EPA has reviewed the available scientific data and other relevant information in support of this action, EPA has sufficient data to assess the hazards of titanium dioxide and to make a determination on aggregate exposure, consistent with section 408(b)(2), an exemption from the requirement of a tolerance for residues of titanium dioxide when used as an inert ingredient (UV protectant) in microencapsulated formulations of lambda-cyhalothrin. EPA's assessment of the dietary exposures and risks associated with establishing the tolerance follows.

A. Toxicological Profile

Titanium is the eighth most abundant element in the earth's crust and consequently spontaneously enters the food chain to some degree. Titanium dioxide (TiO2) is a major constituent of a number of minerals, including rutile, which consists of 95% titanium dioxide. The most commercially important of the titanium compounds, titanium dioxide annual worldwide production is estimated to be appoximately two million metric tons. Titanium dioxide is an opaque powder that is approved for use as a colorant in food (21 CFR 73.575), in drugs (21 CFR 73.1575), and in cosmetics (21 CFR 73.2575; 21 CFR 73.3126). It has an extensive range of industrial uses (e.g., paint, paper, and plastics). Titanium dioxide is currently exempt from the requirement for a tolerance when used as a colorant in pesticide formulations (40 CFR 180.1001(d)).

A National Cancer Institute bioassay concluded that titanium dioxide did not affect mortality, and was not carcinogenic at dose levels of 25,000 or 50,000 ppm in rats or mice.

The World Health Organization Committee on Food Coloring Materials has determined that no ADI need be set for the use of titanium dioxide based on the range of acute, subacute and chronic toxicity assays, all showing low mammalian toxicity, including a two year chronic feeding study in mice which was negative for carcinogenicity. Indeed, titanium dioxide is frequently used as a negative control material in *in vivo* chronic dust exposure studies and in *in vivo* assessments of fibrogenic potential of dusts.

B. Exposures and Risks

Titanium dioxide is currently approved for use in a significant number of pharmaceutical, cosmetic, industrial and food products. Therefore, the potential for aggregate exposure from dietary and non-dietary routes does exist for titanium dioxide. While it is difficult to develop a precise estimate of total human exposure to titanium dioxide, its low toxicity at relatively high doses indicate that current exposures are likely to be significantly below levels that may result in adverse health effects. Titanium dioxide is approved for use in food generally up to

1% of the final weight of the food (10,000 ppm). Even the most extreme assumptions regarding its presence in foods following use as an inert ingredient in lambda-cyhalothrin formulations would not result in a measurable increase in potential dietary intake of titanium dioxide.

All registered lambda-cyhalothrin products to which titanium dioxide is added as an inert ingredient are commercial agricultural products not registered for residential use. The potential for non-occupational exposures by the general population above current background levels resulting from the many non-pesticidal uses of titanium dioxide is unlikely.

Section 408(c)(2)(B) requires that, when considering whether to establish, modify, or revoke an exemption from the requirement of a tolerance, the Agency consider ''available information'' concerning the cumulative effects of a particular pesticide chemical's residues and ''other substances that have a common mechanism of toxicity.'' The Agency believes that ''available information'' in this context might include not only toxicity, chemistry, and exposure data, but also scientific policies and methodologies for understanding common mechanisms of toxicity and conducting cumulative risk assessments. For most pesticide chemicals, although the Agency has some information in its files that may turn out to be helpful in eventually determining whether a pesticide shares a common mechanism of toxicity with any other substances, EPA does not at this time have the methodologies to resolve the complex scientific issues concerning common mechanism of toxicity in a meaningful way. EPA has begun a pilot process to study this issue further through the examination of particular classes of pesticides. The Agency hopes that the results of this pilot process will increase the Agency's scientific understanding of this question such that EPA will be able to develop and apply scientific principles for better determining which chemicals have a common mechanism of toxicity and evaluating the cumulative effects of such chemicals. The Agency anticipates, however, that even as its understanding of the science of common mechanisms increases, decisions on specific classes of chemicals will be heavily dependent on chemical specific data, much of which may not be presently available.

Although at present the Agency does not know how to apply the information in its files concerning common mechanism issues to most risk assessments, there are pesticides as to which the common mechanism issues can be resolved. These pesticides include pesticides that are toxicologically dissimilar to existing chemical substances (in which case the Agency can conclude that it is unlikely that a pesticide shares a common mechanism of activity with other substances) and pesticides that produce a common toxic metabolite (in which case common mechanism of activity will be assumed).

EPA does not have, at this time, available data to determine whether titanium dioxide has a common mechanism of toxicity with other substances or how to include this pesticide chemical in a cumulative risk assessment. Unlike other pesticide chemicals for which EPA has followed a cumulative risk approach based on a common mechanism of toxicity, titanium dioxide does not appear to produce a toxic metabolite produced by other substances. For the purposes of this tolerance action, therefore, EPA has not assumed that titanium dioxide has a common mechanism of toxicity with other substances.

C. Aggregate Risks and Determination of Safety for U.S. Population, Infants and Children

Based on its low toxicity, there is reasonable certainty that no harm will result from aggregate exposure to the U.S. population, including infants and children, to residues of titanium dioxide. This includes all anticipated dietary exposures and all other exposures for which there is reliable information. The Agency has arrived at this conclusion because of the inconsequential increases in dietary exposure resulting from its application to growing crops as an inert ingredient in formulations of lambda-cyhalothrin.

FFDCA section 408 provides that EPA shall apply an additional tenfold margin of safety for infants and children in the case of threshold effects in calculating a dose level that to account for pre-and post-natal toxicity and the completeness of the database unless EPA determines that a different margin of safety will be safe for infants and children. Margins of safety are incorporated into EPA risk assessments either directly through the use of margin of exposure analysis or through using uncertainty (safety) in calculating a dose level that poses no appreciable risk to humans.

Due to low toxicity of titanium dioxide, EPA has not used a safety factor analysis in assessing the risk of this compound. For the same reason, application of the additional safety factor for infants and children would not be appropriate.

III. Other Considerations

A. Analytical Enforcement Methodology

The Agency is establishing an exemption from the requirement of a tolerance without any numerical limitation; therefore, the Agency has concluded that an analytical method is not required for enforcement purposes for titanium dioxide.

B. International Residue Limits

No Codex maximum residue levels have been established for titanium dioxide.

IV. Conclusion

Therefore, an exemption from the requirement of a tolerance is established for residues of titanium dioxide when used as an inert ingredient (UV protectant) in microencapsulated formulations of lambda-cyhalothrin at no more than 3% by weight of the formulation.

V. Objections and Hearing Requests

The new FFDCA section 408(g) provides essentially the same process for persons to ''object'' to a tolerance regulation issued by EPA under new section 408(e) and (l)(6) as was provided in the old section 408 and in section 409. However, the period for filing objections is 60 days, rather than 30 days. EPA currently has procedural regulations which govern the submission of objections and hearing requests. These regulations will require some modification to reflect the new law. However, until those modifications can be made, EPA will continue to use those procedural regulations with appropriate adjustments to reflect the new law.

Any person may, by May 26, 1998, file written objections to any aspect of this regulation and may also request a hearing on those objections. Objections and hearing requests must be filed with the Hearing Clerk, at the address given above (40 CFR 178.20). A copy of the objections and/or hearing requests filed with the Hearing Clerk should be submitted to the OPP docket for this rulemaking. The objections submitted must specify the provisions of the regulation deemed objectionable and the grounds for the objections (40 CFR 178.25). Each objection must be accompanied by the fee prescribed by 40 CFR 180.33(i). If a hearing is requested, the objections must include a statement of the factual issues on which a hearing is requested, the requestor's contentions on such issues, and a summary of any evidence relied upon by the requestor (40 CFR 178.27). A request for a hearing will be granted if

the Administrator determines that the material submitted shows the following: There is genuine and substantial issue of fact; there is a reasonable possibility that available evidence identified by the requestor would, if established, resolve one or more of such issues in favor of the requestor, taking into account uncontested claims or facts to the contrary; and resolution of the factual issues in the manner sought by the requestor would be adequate to justify the action requested (40 CFR 178.32). Information submitted in connection with an objection or hearing request may be claimed confidential by marking any part or all of that information as CBI. Information so marked will not be disclosed except in accordance with procedures set forth in 40 CFR part 2. A copy of the information that does not contain CBI must be submitted for inclusion in the public record. Information not marked confidential may be disclosed publicly by EPA without prior notice.

VI. Public Docket

EPA has established a record for this rulemaking under docket control number [OPP–300632] (including any comments and data submitted electronically). A public version of this record, including printed, paper versions of electronic comments, which does not include any information claimed as CBI, is available for inspection from 8:30 a.m. to 4 p.m., Monday through Friday, excluding legal holidays. The public record is located in Room 119 of the Public Information and Records Integrity Branch, Information Resources and Services Division (7502C), Office of Pesticide Programs, Environmental Protection Agency, Crystal Mall 1B2, 1921 Jefferson Davis Hwy., Arlington, VA.

Electronic comments may be sent directly to EPA at:

opp-docket@epamail.epa.gov.

Electronic comments must be submitted as an ASCII file avoiding the use of special characters and any form of encryption.

The official record for this rulemaking, as well as the public version, as described above will be kept in paper form. Accordingly, EPA will transfer any copies of objections and hearing requests received electronically into printed, paper form as they are received and will place the paper copies in the official rulemaking record which will also include all comments submitted directly in writing. The official rulemaking record is the paper record maintained at the Virginia address in ''ADDRESSES'' at the beginning of this document.

VII. Regulatory Assessment Requirements

This final rule establishes an exemption from the requirement of a tolerance under FFDCA section 408(d) in response to a petition submitted to the Agency. The Office of Management and Budget (OMB) has exempted these types of actions from review under Executive Order 12866, entitled Regulatory Planning and Review (58 FR 51735, October 4, 1993). This final rule does not contain any information collections subject to OMB approval under the Paperwork Reduction Act (PRA), 44 U.S.C. 3501 *et seq.*, or impose any enforceable duty or contain any unfunded mandate as described under Title II of the Unfunded Mandates Reform Act of 1995 (UMRA) (Pub. L. 104–4). Nor does it require any prior consultation as specified by Executive Order 12875, entitled Enhancing the Intergovernmental Partnership (58 FR 58093, October 28, 1993), or special considerations as required by Executive Order 12898, entitled Federal Actions to Address Environmental Justice in Minority Populations and Low-Income Populations (59 FR 7629, February 16, 1994), or require OMB review in accordance with Executive Order 13045, entitled Protection of Children from Environmental Health Risks and Safety Risks (62 FR 19885, April 23, 1997).

In addition, since these tolerances and exemptions that are established on the basis of a petition under FFDCA section 408(d), such as the tolerance exemption in this final rule, do not require the issuance of a proposed rule, the requirements of the Regulatory Flexibility Act (RFA) (5 U.S.C. 601 *et seq.*) do not apply. Nevertheless, the Agency has previously assessed whether establishing tolerances, exemptions from tolerances, raising tolerance levels or expanding exemptions might adversely impact small entities and concluded, as a generic matter, that there is no adverse economic impact. The factual basis for the Agency's generic certification for tolerance actions published on May 4, 1981 (46 FR 24950) and was provided to the Chief Counsel for Advocacy of the Small Business Administration.

VIII. Submission to Congress and the Comptroller General

The Congressional Review Act, 5 U.S.C. 801 *et seq.*, as added by the Small Business Regulatory Enforcement Fairness Act of 1996, generally provides that before a rule may take effect, the Agency promulgating the rule must submit a rule report, which includes a copy of the rule, to each House of the Congress and to the Comptroller General of the United States. EPA will submit a report containing this rule and other required information to the U.S. Senate, the U.S. House of Representatives, and the Comptroller General of the United States prior to publication of this rule in the **Federal Register**. This rule is not a ''major rule'' as defined by 5 U.S.C. 804(2).

List of Subjects in 40 CFR Part 180

Environmental protection, Administrative practice and procedure, Agricultural commodities, Pesticides and pests, Reporting and recordkeeping requirements.

Dated: March 12, 1998.

James Jones,

Director, Registration Division, Office of Pesticide Programs.

Therefore, 40 CFR chapter I is amended as follows:

PART 180— [AMENDED]

1. The authority citation for part 180 continues to read as follows:

Authority: 21 U.S.C. 346a and 371.

2. Section 180.1195 is added to read as follows:

§ 180.1195 Titanium dioxide; exemption from the requirement of a tolerance.

Titanium dioxide is exempted from the requirement of a tolerance for residues in or on growing crops, when used as an inert ingredient (UV protectant) in microencapsulated formulations of the insecticide lambda-cyhalothrin at no more than 3.0% by weight of the formulation.

[FR Doc. 98–7492 Filed 3–24–98; 8:45 am]

BILLING CODE 6560–50–F

ENVIRONMENTAL PROTECTION AGENCY

40 CFR Part 180

[OPP–300625; FRL–5776–5]

RIN 2070–AB78

Imidacloprid; Pesticide Tolerance

AGENCY: Environmental Protection Agency (EPA).

ACTION: Final rule.

SUMMARY: This regulation establishes a tolerance for residues of the insecticide 1-[(6-chloro-3-pyridinyl)methyl]-*N*-nitro-2-imidazolidinimine and its metabolites in or on pecans. The Bayer Corporation submitted a petition to EPA

under the Federal Food, Drug and Cosmetic Act (FFDCA), as amended by the Food Quality Protection Act of 1996 (Pub. L. 104-170) requesting this tolerance.

DATES: This regulation is effective March 25, 1998. Objections and requests for hearings must be received by EPA on or before May 26, 1998.

ADDRESSES: Written objections and hearing requests, identified by the document control number, [OPP–300625], must be submitted to: Hearing Clerk (1900), Environmental Protection Agency, Rm. M3708, 401 M St., SW., Washington, DC 20460. Fees accompanying objections and hearing requests shall be labeled ''Tolerance Petition Fees'' and forwarded to: EPA Headquarters Accounting Operations Branch, OPP (Tolerance Fees), P.O. Box 360277M, Pittsburgh, PA 15251. A copy of any objections and hearing requests filed with the Hearing Clerk identified by the document control number, [OPP–300625], must also be submitted to: Public Information and Records Integrity Branch, Information Resources and Services Division (7502C), Office of Pesticide Programs, Environmental Protection Agency, 401 M St., SW., Washington, DC 20460. In person, bring a copy of objections and hearing requests to Rm. 119, CM #2, 1921 Jefferson Davis Hwy., Arlington, VA.

A copy of objections and hearing requests filed with the Hearing Clerk may also be submitted electronically by sending electronic mail (e-mail) to: opp-docket@epamail.epa.gov. Copies of objections and hearing requests must be submitted as an ASCII file avoiding the use of special characters and any form of encryption. Copies of objections and hearing requests will also be accepted on disks in WordPerfect 5.1/6.1 file format or ASCII file format. All copies of objections and hearing requests in electronic form must be identified by the document control number [OPP–300625]. No Confidential Business Information (CBI) should be submitted through e-mail. Electronic copies of objections and hearing requests on this rule may be filed online at many Federal Depository Libraries.

FOR FURTHER INFORMATION CONTACT: By mail: Elizabeth T. Haeberer, Registration Division (7505C), Office of Pesticide Programs, Environmental Protection Agency, 401 M St., SW., Washington, DC 20460. Office location, telephone number, and e-mail address: Crystal Mall #2, 1921 Jefferson Davis Hwy., Arlington, VA, (703) 308–2891, e-mail: haeberer.elizabeth@epamail.epa.gov.

SUPPLEMENTARY INFORMATION: In the **Federal Register** of December 17, 1997 (62 FR 66077)(FRL–5758–3), EPA, issued a notice pursuant to section 408 of the Federal Food, Drug, and Cosmetic Act (FFDCA), 21 U.S.C. 346a(e) announcing the filing of a pesticide petition (PP 5F4480) by the Bayer Corporation, 8400 Hawthorn Road, P.O. Box 4913, Kansas City, MO 64120-0013, to establish tolerances for the residues of the insecticide 1-[(6-chloro-3-pyridinyl)methyl]-*N*-nitro-2-imidazolidiinimine in or on pecan, nut at 0.05 parts per million (ppm). This notice included a summary of the petition prepared by the Bayer Corporation, the registrant. There were no comments received in response to the notice of filing.

The petition requested that 40 CFR 180.472(a) be amended by establishing a tolerance for the insecticide, 1-[(6-chloro-3-pyridinyl)methyl]-*N*-nitro-2-imidazolidiinimine, in or on pecans at 0.05 ppm.

I. Risk Assessment and Statutory Findings

EPA establishes maximum legal levels (tolerances) for pesticide residues on food under section 408 of the FFDCA. EPA performs a number of analyses to determine the risks from aggregate exposure to pesticide residues. For further discussion of the regulatory requirements of Section 408 and a complete description of the risk assessment process, see the Final Rule on Bifenthrin Pesticide Tolerances in the **Federal Register** of November 26, 1997, (62 FR 62961–62970)(FRL–5754–7).

II. Aggregate Risk Assessment and Determination of Safety

Consistent with section 408(b)(2)(D), EPA has reviewed the available scientific data and other relevant information in support of this action, EPA has sufficient data to assess the hazards of 1-[(6-chloro-3-pyridinyl)methyl]-*N*-nitro-2-imidazolidinimine and its metabolites containing the 6-chloropyridinyl moiety, all calculated as imidacloprid, and to make a determination on aggregate exposure, consistent with section 408(b)(2), for a tolerance for 1-[(6-chloro-3-pyridinyl)methyl]-*N*-nitro-2-imidazolidinimine and its metabolites containing the 6-chloropyridinyl moiety, all calculated as imidacloprid, on pecans at 0.05 ppm. EPA's assessment of the dietary exposures and risks associated with establishing the tolerance follows.

A. Toxicological Profile

EPA has evaluated the available toxicity data and considered its validity, completeness, and reliability as well as the relationship of the results of the studies to human risk. EPA has also considered available information concerning the variability of the sensitivities of major identifiable subgroups of consumers, including infants and children. The nature of the toxic effects caused by 1-[(6-chloro-3-pyridinyl)methyl]-*N*-nitro-2-imidazolidinimine and its metabolites containing the 6-chloropyridinyl moiety are discussed below.

1. A battery of acute toxicity studies placing technical imidacloprid in Toxicity Category II for oral LD_{50}, Category IV for dermal LD_{50}, inhalation LC_{50}, eye iritation and dermal irritation. Imidacloprid is a non-sensitizer.

2. In an acute neurotoxicity study, groups of Sprague-Dawley rats (18/sex/dose) were given a single oral administration of imidacloprid (97.6%) in 0.5% methylcellulose with 0.4% Tween 80 in deionized water at 0, 42, 151 or 307 mg/kg. Parameters evaluated included: clinical pathology (6/sex/dose); Functional Observation Battery (FOB) measurements (12/sex/dose); and neuropathology (6/sex/dose). FOB measurements were made approximately 90 minutes post dosing, and on days 7 and 14. Motor activity measurements were made at approximately 2.5 hours post dosing.

At 307 mg/kg/day, 4/18 males and 10/18 females died and both sexes of rats at this dose exhibited decreased numbers of rears, grip strength (forelimb and hindlimb) and response to stimuli (auditory, touch, or tail pinch) as well as increased gait abnormalities, righting reflex impairments and body temperatures. These symptoms regressed by day 5. At 151 milligram/kilograms/day (mg/kg/day), cage side FOB assessments revealed tremors in one male and one female and red nasal staining in one male. On the day of dosing, a dose-related decrease in total session motor activity was observed in males at 151 mg/kg/day (25% decrease) and 307 mg/kg/day (73%) and in females at all dose levels with the decreases (25, 48, and 81%, respectively at 42, 151 and 307 mg/kg/day) reaching statistical significance ($p < 0.05$) at 151 and 307 mg/kg/day dose levels. Decreases in motor activity were seen at all time intervals. Total session locomotor activity was also decreased to about the same percentage difference but statistical significance was not reported. On days 7 and 14, decreases (not statistically significant) were still observed in motor and locomotor activity in surviving high-dose males. The lowest-observed-effect level (LOEL) was 42 mg/kg based on the decrease in

motor and locomotor activities observed in females; a no-observed-effect level (NOEL) was not established.

3. In a subchronic oral toxicity study, groups of Fischer 344 rats (12/sex/dose) were fed diets containing imidacloprid (98.8%) at 0, 150, 1,000, or 3,000 ppm (0, 9.3, 63.3, or 196 mg/kg/day in males and 0, 10.5, 69.3 or 213 mg/kg/day in females, respectively) for 90 days. No treatment-related effects were seen at 150 ppm. Treatment-related effects included decreases in body weight gain during the first 4 weeks of the study at 1,000 ppm (22% in males and 18% in females) and 3,000 ppm (50% in males and 25% in females) with an associated decrease in forelimb grip strength especially in males. The NOEL was 150 ppm (9.3 and 10.5 mg/kg/day in males and females, respectively) and the LOEL was 1,000 ppm (63.3 and 69.3 mg/kg/day in males and females, respectively).

4. In a subchronic dermal toxicity study, groups of five male and five female New Zealand White rabbits received repeated dermal applications of imidacloprid (95%) at 1,000 mg/kg/day (Limit Dose), 6 hours/day, 5 days/week for 3 weeks. No dermal or systemic toxicity was seen. For systemic and dermal toxicity, the NOEL was > 1,000 mg/kg/day; a LOEL was not established.

5. In a rat inhalation study (28-day study in which rats were exposed 6 hours/day, 5 days a week for 4 weeks), the no observable effect concentration (NOEC) for imidacloprid was 5.5 mg/m^3.

6. In a chronic oral toxicity study, groups of beagle dogs (4/sex/dose) were fed diets containing imidacloprid (94.9%) at 0, 200 or 1,250/2,500 ppm (0, 6.1, 15 or 41/72 mg/kg/day, respectively) for 52 weeks. The 1,250 ppm dose was increased to 2,500 ppm from week 17 onwards. The threshold NOEL was 1,250 ppm (41 mg/kg/day). The LOEL was 2,500 ppm (72 mg/kg/day) based on increased cytochrome-P-450 levels in both sexes and was considered to be a threshold dose. Due to the lack of toxicity at 1,250 ppm, a NOEL was not established in this study; following the dose increase to the 2,500 ppm level, toxicity was observed, thus making 1,250 ppm the threshold NOEL and 2,500 ppm the threshold LOEL.

7. In a combined chronic toxicity/carcinogenicity study, groups of Bor WISW rats (50/sex/dose) received imidacloprid (95.3%) at 0, 100, 300 or 900 ppm (0, 5.7, 16.9 or 51.3 mg/kg/day in males and 0, 7.6, 24.9, or 73 mg/kg/day in females, respectively) for 104 weeks. In another study, rats of the same strain (50/sex) received imidacloprid at 0 or 1,800 ppm (0, 102.6 and 143.7 mg/kg/day in males and females, respectively) for 104 weeks. For chronic toxicity, the NOEL was 100 ppm (5.7 mg/kg/day) and the LOEL was 300 ppm (16.9 mg/kg/day) based on decreased body weight gains in females and increased thyroid lesions in males. There was no evidence of carcinogenicity in either sex.

8. In a carcinogenicity study groups of B6C3F1 mice (50/sex/dose) were fed diets containing imidacloprid (95%) at 0, 100, 330 or 1,000 ppm (0, 20, 66 or 208 mg/kg/day in males and 0, 30, 104 or 274 mg/kg/day in females, respectively) for 2 years. In a supplementary study conducted to evaluate the adequacy of the high dose tested in the main study, the same strain of mice (50/sex) received 0 or 2,000 ppm (414 and 424 mg/kg/day in males and females, respectively) for the same time period. For chronic toxicity, the NOEL was 1,000 ppm (208 mg/kg/day). The LOEL was 2,000 ppm (414 mg/kg/day) based on decreased body weight gain, food consumption and water consumption. There was no evidence of carcinogenicity in either sex.

9. In a developmental toxicity study with Sprague-Dawley rats, groups of pregnant animals (25/group) received oral administration of imidacloprid (94.2%) at 0, 10, 30, or 100 mg/kg/day during gestation days 6 through 16. Maternal toxicity was manifested as decreased body weight gain at all dose levels and reduced food consumption at 100 mg/kg/day. No treatment-related effects were seen in any of the reproductive parameters (i.e., cesarean section evaluation). At 100 mg/kg/day, developmental toxicity manifested as wavy ribs (fetus =7/149 in treated vs. 2/158 in controls and litters, 4/25 vs. 1/25). For maternal toxicity, the LOEL was 10 mg/kg/day lowest dose tested (LDT) based on decreased body weight gain; a NOEL was not established. For developmental toxicity, the NOEL was 30 mg/kg/day and the LOEL was 100 mg/kg/day based on increased wavy ribs.

10. In a developmental toxicity study with Chinchilla rabbits, groups of 16 pregnant does were given oral doses of imidacloprid (94.2%) at 0, 8, 24 or 72 mg/kg/day during gestation days 6 through 18. For maternal toxicity, the NOEL was 24 mg/kg/day and the LOEL was 72 mg/kg/day based on mortality, decreased body weight gain, increased resorptions, and increased abortions. For developmental toxicity, the NOEL was 24 mg/kg/day and the LOEL was 72 mg/kg/day based on decreased fetal body weight, increased resorptions, and increased skeletal abnormalities.

11. In a 2-generation reproductive toxicity study, imidacloprid (95.3%) was administered to Wistar/Han rats at dietary levels of 0, 100, 250, or 700 ppm (0, 7.3, 18.3, or 52.0 mg/kg/day for males and 0, 8.0, 20.5, or 57.4 mg/kg/day for females). For parental/systemic/reproductive toxicity, the NOEL was 250 ppm (18.3 mg/kg/day) and the LOEL was 750 ppm (52 mg/kg/day), based on decreases in body weight in both sexes in both generations. Based on these factors,the Data Evaluation Record should be revised to indicate the parental/systemic/reproductive NOEL and LOEL to be 250 and 700 ppm, respectively, based upon the body weight decrements observed in both sexes in both generations.

12. Studies on gene mutation and other genotoxic effects: an Ames *Salmonella* Assay which was negative up to 5,500 µg/plate concentration; recombination assay-yeast, negative for cross-over in yeast up to 10,000 µg; *In Vivo* Chromasomal Aberration, negative for chromosome breakage up to 2,000 µg/ml; *In Vitro* Chromasomal Aberrations, positive at 500 µg/ml -S9 and 1,300 µg/ml +S9, both toxic doses (acceptable study); *In Vivo* Sister Chromatid assay, negative up to 2,000 µg/ml; *In Vitro* Cytogenetics-CHO cells, negative for producing forward mutation in CHO (mammalian) cells treated up to 1,222 µg/ml; Micronucleus - mouse, negative up to (toxic) 50 µg/ml (ip); DNA repair test, negative for cross-over in yeast up to 10,000 µg; HGPRT assay-CHO, negative up to 2,000 µg/ml. Mutagenicity studies have demonstrated that imidacloprid is non-mutagenic both *in vivo* and *in vitro*.

B. Toxicological Endpoints

1. *Special sensitivity to infants and children*. In assessing the potential for additional sensitivity of infants and children to residues of imidacloprid, EPA considered data from developmental toxicity studies in the rat and rabbit and a 2-generation reproduction study in the rat. These studies are described in unit II A. of this document. The developmental toxicity data demonstrated no increased sensitivity of rats or rabbits to in utero exposure to imidacloprid. In addition, the multi-generation reproductive toxicity study data did not identify any increased sensitivity of rats to in utero or postnatal exposure. Parental NOELs were lower or equivalent to developmental or offspring NOELs. The developmental toxicity studies are designed to evaluate adverse effects on the developing organism resulting from maternal pesticide exposure gestation. Reproduction studies provide information relating to effects from exposure to the pesticide on the

reproductive capability of mating animals and data on systemic toxicity.

FFDCA section 408 provides that EPA shall apply an additional tenfold margin of safety for infants and children in the case of threshold effects to account for pre-and post-natal toxicity and the completeness of the database unless EPA determines that a different margin of safety will be safe for infants and children. Margins of safety are incorporated into EPA risk assessments either directly through use of a MOE analysis or through using uncertainty (safety) factors in calculating a dose level that poses no appreciable risk to humans. EPA believes that reliable data support using the standard uncertainty factor (usually 100 for combined inter- and intra-species variability)) and not the additional tenfold MOE/uncertainty factor when EPA has a complete data base under existing guidelines and when the severity of the effect in infants or children or the potency or unusual toxic properties of a compound do not raise concerns regarding the adequacy of the standard MOE/safety factor.

Although developmental toxicity studies showed no increased sensitivity in fetuses as compared to maternal animals following in utero exposures in rats and rabbits, no increased sensitivity in pups as compared to adults was seen in the two generation reproduction toxicity study in rats, and the toxicology data base is complete as to core requirements, the Agency determined that the additional safety factor for the protection of infants and children will be retained but reduced to 3x based on the following weight-of-the-evidence considerations relating to potential sensitivity and completeness of the data:

(i) There is concern for structure activity relationship. Imidacloprid, a chloronicotinyl compound, is an analog to nicotine and studies in the published literature suggests that nicotine, when administered causes developmental toxicity, including functional deficits, in animals and/or humans that are exposed *in utero*.

(ii) There is evidence that imidacloprid administration causes neurotoxicity following a single oral dose in the acute study and alterations in brain weight in rats in the 2-year carcinogenicity study.

(iii) The concern for structure activity relationship along with the evidence of neurotoxicity dictates the need of a developmental neurotoxicity study for assessment of potential alterations on functional development.

Because a developmental neurotoxicity study potentially relates to both acute and chronic effects in both the mother and the fetus, the additional UF for FQPA is being applied for all population subgroups, and both acute and chronic risk.

2. *Acute toxicity*. Acute dietary risk assessment is required for all population subgroups. LOEL=42 mg/kg/day based on decreased motor activity in female rats; MOE=300, as discussed above. Conventionally, when a LOEL from the critical study is used for risk assessment, an additional UF will be applied. For acute risk assessment with imidacloprid, however, the Committee determined that an additional uncertainty factor is not necessary because: (i) of the low confidence in the endpoint based on the minimal nature of the effect (decreased motor activity only in females);(ii) this effect was seen in adult rats; and (iii) the same effect was not seen in the subchronic toxicity study following repeated doses.

3. *Short - and intermediate - term toxicity*. In a dermal toxicity study, groups of five male and five female New Zealand White rabbits received repeated dermal applications of imidacloprid (95%) at 1,000 mg/kg/day (Limit Dose), 6 hours/day, 5 days/week for three weeks. No dermal or systemic toxicity was seen. For systemic and dermal toxicity, the NOEL was > 1,000 mg/kg/day; a LOEL was not established (MRID No. 42256329).

In an oral toxicity study, groups of Fischer 344 rats (12/sex/dose) were fed diets containing imidacloprid (98.8%) at 0, 150, 1,000, or 3,000 ppm (0, 9.3, 63.3, or 196 mg/kg/day in males and 0, 10.5, 69.3 or 213 mg/kg/day in females, respectively) for 90 days. No treatment-related effects were seen at 150 ppm. Treatment-related effects included decreases in body weight gain during the first 4 weeks of the study at 1,000 ppm (22% in males and 18% in females) and 3,000 ppm (50% in males and 25% in females) with an associated decrease in forelimb grip strength especially in males. The NOEL was 150 ppm (9.3 and 10.5 mg/kg/day in males and females, respectively) and the LOEL was 1,000 ppm (63.3 and 69.3 mg/kg/day in males and females, respectively) (MRID No. 43286401).

In a rat inhalation study (28-day study in which rats were exposed 6 hours/day, 5 days a week for 4 weeks), the no observable effect concentration (NOEC) for imidacloprid was 5.5 mg/m3 (MRID No. 422730-01).

4. *Chronic toxicity*. EPA has established the RfD for 1-[(6-chloro-3-pyridinyl)methyl]-*N*-nitro-2-imidazolidinimine at 0.019 mg/kg/day. This RfD is based upon increased number of thyroid lesions in male and decreased body weight gains in female Bor WISW rats, with a NOEL of 5.7 mg/kg/day, and LOEL of 16.9/24.9 mg/kg/day (males and females respectively); UF=300, as discussed above.

5. *Carcinogenicity*. This chemical has been classified as a Group E - no evidence of carcinogenicity for humans. A cancer risk assessment is not required.

C. Exposures and Risks

1. *From food and feed uses*. Tolerances have been established 40 CFR 180.472(a) for the combined residues of 1-[(6-chloro-3-pyridinyl)methyl]-*N*-nitro-2-imidazolidinimine and its metabolites, in or on a variety of raw agricultural commodities. Risk assessments were conducted by EPA to assess dietary exposures and risks from imidacloprid as follows:

i. *Acute exposure and risk*. Acute dietary risk assessments are performed for a food-use pesticide if a toxicological study has indicated the possibility of an effect of concern occurring as a result of a one day or single exposure. An acute dietary risk assessment is required for all population subgroups.

This acute dietary (food) risk assessment used the Theoretical Maximum Residue Contribution (TMRC). Resulting exposure values and Margins of Exposure (MOEs; MOE = Acute Endpoint ÷ Exposure) are shown below.

Population Subgroup	High-End[1] Exposure (mg/kg/day)	MOE[2]	Exposure @ 99th Percentile (mg/kg/day)	MOE
U.S. population (48 states)	0.10	420	0.05[3]	840
Infants (< 1 yr)	0.15	280	0.10	420
Children (1-6 yrs)	0.15	280	0.10	420
Females (13+ yrs)	0.05	840	0.04	1050

Population Subgroup	High-End[1] Exposure (mg/kg/day)	MOE[2]	Exposure @ 99th Percentile (mg/kg/day)	MOE
Males (13+ yrs)	0.10	420	0.05	840

[1] > 99.5th Percentile.
[2] MOE = Margin of Exposure.
[3] @ 98th Percentile (U.S. Pop. only).

These results should be viewed as a very conservative risk estimate; refinement using anticipated residue values and percent crop-treated information in conjunction with Monte Carlo analysis would result in a lower estimate (i.e., higher MOE) of acute dietary exposure.

ii. *Chronic exposure and risk.* The endpoint selected for chronic risk assessment is decreased body weight gains in females and increased thyroid lesions observed at 7.6 mg/kg/day in male rats in a combined chronic toxicity/carcinogenicity study. The NOEL was 5.7 mg/kg/day. A UF of 300 is required as discussed above. In conducting this chronic dietary (food) risk assessment, EPA used: (1) tolerance level residues for pecans, grain sorghum, and all other commodities with published, permanent or time-limited imidacloprid tolerances, the pending proposed tolerance for the citrus crop group; and, (2) percent crop-treated (%CT) information on some of these crops. Thus, this risk assessment should be viewed as partially refined. Further refinement using anticipated residue values and additional %CT information would result in a lower estimate of chronic dietary exposure. The results are summarized below.

Population Subgroup	Exposure(mg/kg/day)	%RfD
Nursing Infants (<1 year old)	0.002824	15
Non-Nursing Infants (<1 year old)	0.009983	53
Children (1-6 years old)	0.007514	40
Children (7-12 years old)	0.005305	28
U.S. Population - Fall Season	0.003716	20
Northeast Region	0.003771	20
Western Region	0.003842	20
Hispanics	0.003879	20
Non-Hispanic Others	0.003906	21

The subgroups listed above are: (1) the U.S. population (48 states); (2) those for infants and children; and, (3) the other subgroups for which the percentage of the RfD occupied is greater than that occupied by the subgroup U.S. population (48 states).

Section 408(b)(2)(F) states that the Agency may use data on the actual percent of food treated for assessing chronic dietary risk only if the Agency can make the following findings: (1) that the data used are reliable and provide a valid basis for showing the percentage of food derived from a crop that is likely to contain residues; (2) that the exposure estimate does not underestimate the exposure for any significant subpopulation and; (3) where data on regional pesticide use and food consumption are available, that the exposure estimate does not understate exposure for any regional population. In addition, the Agency must provide for periodic evaluation of any estimates used. To provide for the periodic evaluation of these estimates of percent crop treated as required by the section 408(b)(2)(F), EPA may require registrants to submit data on percent crop treated.

The Agency used percent crop treated (PCT) information as follows. A routine chronic dietary exposure analysis for imidacloprid was based on likely maximum percent of crop treated as follows: 6% grapefruits, 3% oranges, 13% other citrus, 19% apples, 2% pears, 11% grapes, 30% eggplants/peppers, 32% head lettuce, 21% cole crops, 15% melons, 10% tomatoes, 6% cotton.

The Agency believes that the three conditions listed above have been met. With respect to (1), EPA finds that the PCT information described above for imidacloprid is reliable and has a valid basis. The Agency has utilized the latest statistical data from RFF (Resources For The Future), DOANE, and USDA, the best available sources for such information. Concerning (2) and (3), regional consumption information and consumption information for significant subpopulations is taken into account through EPA's computer-based model for evaluating the exposure of significant subpopulations including several regional groups. Use of this consumption information in EPA's risk assessment process ensures that EPA's exposure estimate does not understate exposure for any significant subpopulation group and allows the Agency to be reasonably certain that no regional population is exposed to residue levels higher than those estimated by the Agency. Other than data available through national food consumption surveys, EPA does not have available information on the consumption of food bearing imidacloprid in a particular area.

2. *From drinking water.* EPA used the estimated environmental concentration (EEC) data to calculate acute and chronic exposure estimates for imidacloprid in surface water using the following formulas:

Adult Male: Exposure (mg/kg/day) = (chemical concentration in g/L in consumed water) * (10^{-3} mg/µg) ÷ (70 kg body weight) * (2 L water consumed/day)

Adult Female: Exposure (mg/kg/day) = (chemical concentration in g/L in consumed water) * (10^{-3} mg/µg) ÷ (60 kg body weight) * (2 L water consumed/day)

Child (1-6 years): Exposure (mg/kg/day) = (chemical concentration in g/L in consumed water) * (10^{-3} mg/µg) ÷ (10 kg body weight) * (1 L water consumed/day)

Acute MOE: Acute Endpoint (42 mg/kg/day) ÷ Exposure (mg/kg/day)

Chronic Risk (%RfD): Exposure (mg/kg/day) ÷ RfD (0.019 mg/kg/day) * 100

The 2 liters (L) of drinking water consumed/day by adults and the 1 L per day consumed by children are default assumptions used by the Office of Water. The Agency's default body weights for males is 70 kg and for females, 60 kg. HED's default body weight for children is 10 kg.

The results are summarized below:

Population Subgroup	Acute Scenario			Chronic Scenario		
	µg/L in Water Consumed	Exposure (mg/kg/day)	MOE	µg/L in Water Consumed	Exposure (mg/kg/day)	% RfD
Adult male	50.9	0.00145	29,000	19.1	0.00055	2.9
Adult Female	50.9	0.00170	24,700	19.1	0.00064	3.4
Child (1-6 yrs)	50.9	0.00509	8,250	19.1	0.00191	10.1

These results should be viewed as a very conservative risk estimate. Refinement by applying factors to account for the percent of acreage planted in a watershed, the percent of crop-treated, and the water flow rate would result in a lower estimate of acute and chronic exposure from consumption of surface waters containing imidacloprid residues.

3. *From non-occupational non-dietary exposure.* Imidacloprid is currently registered for use on the following residential non-food sites: ornamentals (e.g., flowering and foliage plants, ground covers, turf, lawns, et al.), tobacco, golf courses, walkways, recreational areas, bathrooms, household or domestic dwellings (indoor/outdoor), cats/dogs, and wood protection treatment to buildings. Available data do not demonstrate that imidacloprid has either dermal or inhalation toxicity potential, therefore, non-occupational non-dietary risk assessments are not required. Since data show no toxicity from short term exposure via the dermal or inhalation route, the Agency feels there is no contribution to toxicity from these routes of exposure, and no increase in aggregate risk is anticipated from this exposure. Therefore residential exposure does not aggregate with dietary exposure for any risk assessments.

4. *Cumulative exposure to substances with common mechanism of toxicity.* Section 408(b)(2)(D)(v) requires that, when considering whether to establish, modify, or revoke a tolerance, the Agency consider ''available information'' concerning the cumulative effects of a particular pesticide's residues and '' other substances that have a common mechanism of toxicity.'' An explanation of the current Agency approach to assessment of pesticides with a common mechanism of toxicity may be found in the Final Rule on Bifenthrin Pesticide Tolerances **Federal Register** of November 26, 1997, (62 FR 62961–62970)(FRL–5754–7).

EPA does not have, at this time, available data to determine whether imidacloprid has a common mechanism of toxicity with other substances or how to include this pesticide in a cumulative risk assessment. Unlike other pesticides for which EPA has followed a cumulative risk approach based on a common mechanism of toxicity, imidacloprid does not appear to produce a toxic metabolite produced by other substances. For the purposes of this tolerance action, therefore, EPA has not assumed that imidacloprid has a common mechanism of toxicity with other substances. Imidacloprid is the sole member to date of the new chloronicotinyl class of pesticides.

D. Aggregate Risks and Determination of Safety for U.S. Population, Infants and Children

1. *Acute risk.* Acute aggregate dietary risk (combined food and water) is estimated by adding the acute exposures to food and water (highest of ground or surface water) and comparing this exposure to the acute dietary endpoint:

Aggregate MOE_{ACUTE} = acute dietary endpoint ÷ aggregate exposure.

The results of the acute aggregate dietary (food and water) risk assessment are given below.

Population Subgroup	Exposure from Food (mg/kg/day)	Exposure from Surface Water (mg/kg/day)	Aggregate Exposure (mg/kg/day)	Aggregate Acute MOE
U.S. population (48 states)	0.101	0.0023	0.102	412
Infants (<1 yr)	0.102	0.0054	0.105	4005
Children (1-6 yrs)	0.102	0.005	0.105	4005
Females (13+ yrs)	0.051	0.002	0.052	808
Males (13+ yrs)	0.101	0.002	0.102	412

[1] High-End Exposure (>99.5th Percentile).
[2] Exposure @ 99th percentile; high-end exposure = 0.15 mg/kg/day.
[3] 3 Exposure value used was that calculated for females (13+ years) and males (13+ years).
[4] Exposure value used was that calculated for children (1-6 years).
[5] Based on exposure @ 99th percentile; MOE is 271 @ high-end exposure (>99.5th percentile).

For imidacloprid, an (aggregate) acute dietary MOE of ≥300 is needed to protect the safety of all population subgroups. The aggregate MOEs for the general population, females (13+ years), and males (13+ years) are >400 at the high-end exposure. The aggregate MOEs for infants and children are calculated to be 400 at the 99th percentile of exposure, and 271 at the high-end exposure (>99.5th percentile).

In conducting the acute dietary (food) risk assessment the Theoretical Maximum Residue Contribution (TMRC) was used. There was no refinement using anticipated residue values and percent crop-treated information in conjunction with Monte Carlo analysis which would result in a much lower estimate (i.e., higher MOE) of acute dietary exposure.

Because of the very conservative nature of the assumptions used in these calculations, and the fact that refinement would lower the risk estimates (i.e., result in higher MOE values) for both MOE_{food} and MOE_{water}, EPA concludes that there is a reasonable certainty that no harm will result to infants, children, or adults from acute agregate (food and water) exposure to imidacloprid residues.

2. *Chronic risk.* Dermal and inhalation exposure endpoints were not selected due to the demonstrated absence of toxicity, thus, there is no residential component for assessing chronic aggregate exposure and risk.

In conducting the chronic dietary (food) risk assessment, EPA used: (i) tolerance level residues for pecans, grain sorghum, and all other commodities with published, permanent or time-limited imidacloprid tolerances, the pending proposed

tolerance for the citrus crop group; and, (ii) percent crop-treated (%CT) information on some of these crops. Thus, this risk assessment should be viewed as partially refined. Further refinement using anticipated residue values and additional %CT information would result in a lower estimate of chronic dietary exposure.

Chronic aggregate dietary risk (combined food and water) will be estimated by adding the chronic exposures to food and water (highest of ground or surface water) and comparing this exposure to the RfD:

Aggregate %RfD Occupied = (aggregate exposure ÷ RfD) x 100.

The results of the chronic aggregate dietary (food and water) risk assessment are given below.

Population Subgroup	Exposure from Food (mg/kg/day)	Exposure from Surface Water (mg/kg/day)	Aggregate Exposure (mg/kg/day)	% RfD Occupied
U.S. population (48 states)	0.0036	0.00061	0.0042	22
Nursing infants (<1 yr old)	0.0028	0.00192	0.0047	25
Non-nursing infants (<1 yr old)	0.0100	0.00192	0.0119	63
Children (1-6 yrs old)	0.0075	0.0019	0.0094	49
Children (7-12 yrs old)	0.0053	0.00192	0.0072	38

[1] Used average value based on adult male (0.00055 mg/kg/day) and adult female (0.00064 mg/kg/day).
[2] Data not available; used the value for children (1-6 years).

This chronic aggregate dietary risk assessment is based on conservative exposure consumptions. Refinement of the assumptions used in estimating exposure from food and water sources would result in lower estimates of chronic aggregate dietary risk.

The calculated results indicate that the aggregate dietary exposure to imidacloprid utilizes 22% of the RfD for the U.S. general population.

For infants and children, the percentage of the RfD that is utilized by aggregate dietary exposure to imidacloprid ranges from 25% for nursing infants less than 1-year old, up to 63% for non-nursing infants less than 1-year old.

The Agency generally has no concern for exposures below 100% of the RfD because the RfD represents the level at or below which daily aggregate dietary exposure over a lifetime will not pose appreciable risks to human health.

EPA concludes that there is a reasonable certainty that no harm will result to infants, children, or adults from chronic aggregate (food plus water) exposure to imidacloprid residues.

3. *Short - intermediate - term risk.* Short - and intermediate - term aggregate exposure take into account chronic dietary food and water plus indoor and outdoor residential exposure. This risk assessment is not required for imidacloprid.

E. Aggregate Cancer Risk for U.S. Population

Imidacloprid has been classified as a Group E chemical, no evidence of carcinogenicity for humans, therefore, a cancer risk assessment is not required.

III. Other Considerations

A. Metabolism In Plants and Animals

The nature of imidacloprid residues in plants and animals is adequately understood. The residue of concern is imidacloprid and its metabolites containing the 6-chloropyridinyl moiety, all expressed as parent, as specified in 40 CFR 180.472.

B. Analytical Enforcement Methodology

Adequate enforcement methods are available for determination of the regulated imidacloprid residue in plant (Bayer GC/MS Method 00200 and Bayer HPLC-UV Confirmatory Method 00357) and animal (Bayer GC/MS Method 00191) commodities. These methods have successfully completed EPA Tolerance Method Validation, and are awaiting publication in Pesticide Analytical Manual II (PAM II). In the interim, these methods are available from Calvin Furlow, EPA, OPP, IRSD, PIRIB.

C. Magnitude of Residues

Residue data have been submitted from 13 field trials, with adequate geographical representation, and including 8 varieties of pecans. The pecan trees in 7 field trials were treated with 1 or 2 foliar applications starting at the fill stage for the first application and at or prior to shuck split for the second application for a repeat application interval of 10 + or - 2 days. Pecan trees were treated with imidacloprid at a rate of 0.17 lb ai/acre/application plus a spray adjuvant using ground airblast sprays, for a total application of 0.34 lb/ai/acre/season. Pecans were gathered at the earliest harvest which varied from 4 to 31 days after the last application. Pecan trees in 6 field trials were treated with imidacloprid in a single soil application at a rate of 0.5 lb/ai/acre. The pre-harvest interval (PHI) for pecans from the single soil application ranged from 99 to 150 days.

All treated pecan samples were below the limit of quantitation (LOQ) of <0.05 ppm regardless of the PHI. Total imidacloprid residues ranged from approximately 0.001 ppm to 0.005 ppm or <1/2 the limit of detection (LD).

Crop field trial data are adequate to show that combined residues of imidacloprid and its metabolites, all calculated as imidacloprid, will not exceed the tolerance of 0.05 ppm requested and prescribed in this **Federal Register** rule for the pesticide chemical residue in the raw agricultural commodity, pecans. OPPTS Test Guidelines, Series 860, Residue Chemistry, Table 1, does not list any processed commodities for pecans, thus no imidacloprid in pecans processing study is required. Similarly , there are no bovine, porcine, or poultry feedstuffs associated with pecans; thus there is little likelihood of additional imidacloprid in meat, milk, poultry, and eggs from the feeding of pecans. The established imidacloprid secondary tolerances are adequate for any inadvertent feeding of pecans.

D. Rotational Crop Restrictions.

Field crop rotational studies with three crop groups (small grains, root crops, and leafy vegetables) support a 12-month plant-back restriction. Since pecans are not considered to be a rotated crop, this restriction does not apply to pecans.

E. International Residue Limits

There are no CODEX or Mexican maximum residue limits (MRLs) for imidacloprid on any crop. There are Canadian MRLs for combined residues of imidacloprid plus metabolites with the 6-chlorophenyl moiety, but not on pecans. International compatibility is thus not an issue.

IV. Conclusion

Therefore, the tolerance is established for residues of 1-[(6-chloro-3-

pyridinyl)methyl]-N-nitro-2-imidazolidinimine and its metabolites in or on pecans at 0.05 ppm.

V. Objections and Hearing Requests

The new FFDCA section 408(g) provides essentially the same process for persons to ''object'' to a tolerance regulation issued by EPA under new section 408(e) and (l)(6) as was provided in the old section 408 and in section 409. However, the period for filing objections is 60 days, rather than 30 days. EPA currently has procedural regulations which govern the submission of objections and hearing requests. These regulations will require some modification to reflect the new law. However, until those modifications can be made, EPA will continue to use those procedural regulations with appropriate adjustments to reflect the new law.

Any person may, by May 26, 1998, file written objections to any aspect of this regulation and may also request a hearing on those objections. Objections and hearing requests must be filed with the Hearing Clerk, at the address given above (40 CFR 178.20). A copy of the objections and/or hearing requests filed with the Hearing Clerk should be submitted to the OPP docket for this rulemaking. The objections submitted must specify the provisions of the regulation deemed objectionable and the grounds for the objections (40 CFR 178.25). Each objection must be accompanied by the fee prescribed by 40 CFR 180.33(i). If a hearing is requested, the objections must include a statement of the factual issues on which a hearing is requested, the requestor's contentions on such issues, and a summary of any evidence relied upon by the requestor (40 CFR 178.27). A request for a hearing will be granted if the Administrator determines that the material submitted shows the following: There is genuine and substantial issue of fact; there is a reasonable possibility that available evidence identified by the requestor would, if established, resolve one or more of such issues in favor of the requestor, taking into account uncontested claims or facts to the contrary; and resolution of the factual issues in the manner sought by the requestor would be adequate to justify the action requested (40 CFR 178.32). Information submitted in connection with an objection or hearing request may be claimed confidential by marking any part or all of that information as CBI. Information so marked will not be disclosed except in accordance with procedures set forth in 40 CFR part 2. A copy of the information that does not contain CBI must be submitted for inclusion in the public record. Information not marked confidential may be disclosed publicly by EPA without prior notice.

VI. Public Docket

EPA has established a record for this rulemaking under docket control number [OPP–300625] (including any comments and data submitted electronically). A public version of this record, including printed, paper versions of electronic comments, which does not include any information claimed as CBI, is available for inspection from 8:30 a.m. to 4 p.m., Monday through Friday, excluding legal holidays. The public record is located in Room 119 of the Public Information and Records Integrity Branch, Information Resources and Services Division (7502C), Office of Pesticide Programs, Environmental Protection Agency, Crystal Mall #2, 1921 Jefferson Davis Highway, Arlington, VA.

Electronic comments may be sent directly to EPA at:

opp-docket@epamail.epa.gov.

Electronic comments must be submitted as an ASCII file avoiding the use of special characters and any form of encryption.

The official record for this rulemaking, as well as the public version, as described above will be kept in paper form. Accordingly, EPA will transfer any copies of objections and hearing requests received electronically into printed, paper form as they are received and will place the paper copies in the official rulemaking record which will also include all comments submitted directly in writing. The official rulemaking record is the paper record maintained at the Virginia address in ''ADDRESSES'' at the beginning of this document.

VII. Regulatory Assessment Requirements

This final rule establishes a tolerance for the residues of imidacloprid at 0.05 ppm in/on pecans under FFDCA section 408(d) in response to a petition submitted to the Agency. The Office of Management and Budget (OMB) has exempted these types of actions from review under Executive Order 12866, entitled Regulatory Planning and Review (58 FR 51735, October 4, 1993). This final rule does not contain any information collections subject to OMB approval under the Paperwork Reduction Act (PRA), 44 U.S.C. 3501 *et seq.*, or impose any enforceable duty or contain any unfunded mandate as described under Title II of the Unfunded Mandates Reform Act of 1995 (UMRA) (Pub. L. 104-4). Nor does it require any prior consultation as specified by Executive Order 12875, entitled Enhancing the Intergovernmental Partnership (58 FR 58093, October 28, 1993), or special considerations as required by Executive Order 12898, entitled Federal Actions to Address Environmental Justice in Minority Populations and Low-Income Populations (59 FR 7629, February 16, 1994), or require OMB review in accordance with Executive Order 13045, entitled Protection of Children from Environmental Health Risks and Safety Risks (62 FR 19885, April 23, 1997).

In addition, since these tolerances and exemptions that are established on the basis of a petition under FFDCA section 408(d), such as the tolerance for the residues of imidacloprid in/on pecans at 0.05 ppm in this final rule, do not require the issuance of a proposed rule, the requirements of the Regulatory Flexibility Act (RFA) (5 U.S.C. 601 *et seq.*) do not apply. Nevertheless, the Agency has previously assessed whether establishing tolerances, exemptions from tolerances, raising tolerance levels or expanding exemptions might adversely impact small entities and concluded, as a generic matter, that there is no adverse economic impact. The factual basis for the Agency's generic certification for tolerance actions published on May 4, 1981 (46 FR 24950) and was provided to the Chief Counsel for Advocacy of the Small Business Administration.

VIII. Submission to Congress and the Comptroller General

The Congressional Review Act, 5 U.S.C. 801 *et seq.*, as added by the Small Business Regulatory Enforcement Fairness Act of 1996, generally provides that before a rule may take effect, the agency promulgating the rule must submit a rule report, which includes a copy of the rule, to each House of the Congress and to the Comptroller General of the United States. EPA will submit a report containing this rule and other required information to the U.S. Senate, the U.S. House of Representatives, and the Comptroller General of the United States prior to publication of the rule in the **Federal Register**. This rule is not a ''major rule'' as defined by 5 U.S.C. 804(2).

List of Subjects in 40 CFR Part 180

Environmental protection, Administrative practice and procedure, Agricultural commodities, Pesticides and pests, Reporting and recordkeeping requirements.

Dated: March 16, 1998

James Jones,

Director, Registration Division, Office of Pesticide Programs.

Therefore, 40 CFR chapter I is amended as follows:

PART 180–[AMENDED]

1. The authority citation for part 180 continues to read as follows:

Authority : 21 U.S.C. 346a and 371.

2. Section 180.472, paragraph (a) is amended by alphabetically adding the commodity to read as follows:

§ 180.472 Imidacloprid; tolerances for residues.

(a) * * *

Commodity	Parts per million
* * * * * * *	
Pecans	0.05
* * * * * * *	

* * * * *

[FR Doc. 98–7647 Filed 3–24–98; 8:45 am]

BILLING CODE 6560–50–F

ENVIRONMENTAL PROTECTION AGENCY

40 CFR Part 180

[OPP–300628; FRL–5778–3]

RIN 2070–AB78

Imidacloprid; Pesticide Tolerance

AGENCY: Environmental Protection Agency (EPA).

ACTION: Final rule.

SUMMARY: This regulation establishes tolerances for residues of the insecticide 1-[(6-chloro-3-pyridinyl)methyl]-*N*-nitro-2-imidazolidinimine and its metabolites in or on sorghum grain 0.05 parts per million (ppm), forage 0.10 ppm, and stover 0.10 ppm. Gustafson, Inc. submitted a petition to EPA under the Federal Food, Drug and Cosmetic Act (FFDCA), as amended by the Food Quality Protection Act of 1996 (Pub. L. 104-170) requesting these tolerances.

DATES: This regulation is effective March 25, 1998. Objections and requests for hearings must be received by EPA on or before May 26, 1998.

ADDRESSES: Written objections and hearing requests, identified by the document control number, [OPP–300628], must be submitted to: Hearing Clerk (1900), Environmental Protection Agency, Rm. M3708, 401 M St., SW., Washington, DC 20460. Fees accompanying objections and hearing requests shall be labeled ''Tolerance Petition Fees'' and forwarded to: EPA Headquarters Accounting Operations Branch, OPP (Tolerance Fees), P.O. Box 360277M, Pittsburgh, PA 15251. A copy of any objections and hearing requests filed with the Hearing Clerk identified by the document control number, [OPP–300628], must also be submitted to: Public Information and Records Integrity Branch, Information Resources and Services Division (7502C), Office of Pesticide Programs, Environmental Protection Agency, 401 M St., SW., Washington, DC 20460. In person, bring a copy of objections and hearing requests to Rm. 119, CM #2, 1921 Jefferson Davis Hwy., Arlington, VA.

A copy of objections and hearing requests filed with the Hearing Clerk may also be submitted electronically by sending electronic mail (e-mail) to: opp-docket@epamail.epa.gov. Copies of objections and hearing requests must be submitted as an ASCII file avoiding the use of special characters and any form of encryption. Copies of objections and hearing requests will also be accepted on disks in WordPerfect 5.1/6.1 file format or ASCII file format. All copies of objections and hearing requests in electronic form must be identified by the document control number [OPP–300628]. No Confidential Business Information (CBI) should be submitted through e-mail. Electronic copies of objections and hearing requests on this rule may be filed online at many Federal Depository Libraries.

FOR FURTHER INFORMATION CONTACT: By mail: Elizabeth T. Haeberer, Registration Division (7505C), Office of Pesticide Programs, Environmental Protection Agency, 401 M St., SW., Washington, DC 20460. Office location, telephone number, and e-mail address: Crystal Mall #2, 1921 Jefferson Davis Hwy., Arlington, VA, (703) 308–2891, e-mail: haeberer.elizabeth@epamail.epa.gov.

SUPPLEMENTARY INFORMATION: In the **Federal Register** of October 29, 1997 (62 FR 56171)(FRL–5752–2), EPA, issued a notice pursuant to section 408 of the Federal Food, Drug, and Cosmetic Act (FFDCA), 21 U.S.C. 346a(e) announcing the filing of a pesticide petition (PP 4F4415) by Gustafson, Inc., 1400 Preston Road, Suite 400, Plano, Texas 75093, to establish tolerances for the residues of the insecticide 1-[(6-chloro-3-pyridinyl)methyl]-*N*-nitro-2-imidazolidiinimine in or on sorgum grain at 0.05 parts per million (ppm), forage 0.10 ppm, and stover 0.10 ppm. This notice included a summary of the petition prepared by Gustafson, Inc., the registrant. There were no comments received in response to the notice of filing.

The petition requested that 40 CFR 180.472(a) be amended by establishing tolerances for the insecticide, 1-[(6-chloro-3-pyridinyl)methyl]-*N*-nitro-2-imidazolidiinimine, in or on sorghum grain, forage, and stover at 0.05, 0.10, and 0.10 ppm respectively.

I. Risk Assessment and Statutory Findings

EPA establishes maximum legal levels (tolerances) for pesticide residues on food under section 408 of the FFDCA. EPA performs a number of analyses to determine the risk from aggregate exposure to pesticide residues. For further discussion of the regulatory requirements of section 408 and a complete description of the risk assessment process, see the Final Rule on Bifenthrin Pesticide Tolerances in the **Federal Register**, of November 26, 1997, (62 FR 62961–62970)(FRL–5754–7).

II. Aggregate Risk Assessment and Determination of Safety

Consistent with section 408(b)(2)(D), EPA has reviewed the available scientific data and other relevant information in support of this action, EPA has sufficient data to assess the hazards of 1-[(6-chloro-3-pyridinyl)methyl]-*N*-nitro-2-imidazolidinimine and its metabolites containing the 6-chloropyridinyl moiety, all calculated as imidacloprid, and to make a determination on aggregate exposure, consistent with section 408(b)(2), for a tolerance for 1-[(6-chloro-3-pyridinyl)methyl]-*N*-nitro-2-imidazolidinimine and its metabolites containing the 6-chloropyridinyl

moiety, all calculated as imidacloprid, in or on sorghum grain, forage, and stover at 0.05, 0.10, and 0.10 ppm respectively. EPA's assessment of the dietary exposures and risks associated with establishing the tolerance follows.

A. Toxicological Profile

EPA has evaluated the available toxicity data and considered its validity, completeness, and reliability as well as the relationship of the results of the studies to human risk. EPA has also considered available information concerning the variability of the sensitivities of major identifiable subgroups of consumers, including infants and children. The nature of the toxic effects caused by 1-[(6-chloro-3-pyridinyl)methyl]-*N*-nitro-2-imidazolidinimine and its metabolites containing the 6-chloropyridinyl moiety are discussed below.

1. A battery of acute toxicity studies placing technical imidacloprid in Toxicity Category II for oral LD_{50}, Category IV for dermal LD_{50}, inhalation LC_{50}, eye iritation and dermal irritation. Imidacloprid is a non-sensitizer.

2. In an acute neurotoxicity study, groups of Sprague-Dawley rats (18/sex/dose) were given a single oral administration of imidacloprid (97.6%) in 0.5% methylcellulose with 0.4% Tween 80 in deionized water at 0, 42, 151 or 307 mg/kg. Parameters evaluated included: clinical pathology (6/sex/dose); Functional Observation Battery (FOB) measurements (12/sex/dose); and neuropathology (6/sex/dose). FOB measurements were made approximately 90 minutes post dosing, and on days 7 and 14. Motor activity measurements were made at approximately 2.5 hours post dosing.

At 307 mg/kg/day, 4/18 males and 10/18 females died and both sexes of rats at this dose exhibited decreased numbers of rears, grip strength (forelimb and hindlimb) and response to stimuli (auditory, touch, or tail pinch) as well as increased gait abnormalities, righting reflex impairments and body temperatures. These symptoms regressed by day 5. At 151 milligram/kilograms/day (mg/kg/day), cage side FOB assessments revealed tremors in one male and one female and red nasal staining in one male. On the day of dosing, a dose-related decrease in total session motor activity was observed in males at 151 mg/kg/day (25% decrease) and 307 mg/kg/day (73%) and in females at all dose levels with the decreases (25, 48, and 81%, respectively at 42, 151 and 307 mg/kg/day) reaching statistical significance ($p < 0.05$) at 151 and 307 mg/kg/day dose levels. Decreases in motor activity were seen at all time intervals. Total session locomotor activity was also decreased to about the same percentage difference but statistical significance was not reported. On days 7 and 14, decreases (not statistically significant) were still observed in motor and locomotor activity in surviving high-dose males. The lowest-observed-effect level (LOEL) was 42 mg/kg based on the decrease in motor and locomotor activities observed in females; a no-observed-effect level (NOEL) was not established.

3. In a subchronic oral toxicity study, groups of Fischer 344 rats (12/sex/dose) were fed diets containing imidacloprid (98.8%) at 0, 150, 1,000, or 3,000 ppm (0, 9.3, 63.3, or 196 mg/kg/day in males and 0, 10.5, 69.3 or 213 mg/kg/day in females, respectively) for 90 days. No treatment-related effects were seen at 150 ppm. Treatment-related effects included decreases in body weight gain during the first 4 weeks of the study at 1,000 ppm (22% in males and 18% in females) and 3,000 ppm (50% in males and 25% in females) with an associated decrease in forelimb grip strength especially in males. The NOEL was 150 ppm (9.3 and 10.5 mg/kg/day in males and females, respectively) and the LOEL was 1,000 ppm (63.3 and 69.3 mg/kg/day in males and females, respectively).

4. In a subchronic dermal toxicity study, groups of 5 male and 5 female New Zealand White rabbits received repeated dermal applications of imidacloprid (95%) at 1,000 mg/kg/day (Limit Dose), 6 hours/day, 5 days/week for three weeks. No dermal or systemic toxicity was seen. For systemic and dermal toxicity, the NOEL was > 1,000 mg/kg/day; a LOEL was not established.

5. In a rat inhalation study (28-day study in which rats were exposed 6 hours/day, 5 days a week for 4 weeks), the no observable effect concentration (NOEC) for imidacloprid was 5.5 mg/m^3.

6. In a chronic oral toxicity study, groups of beagle dogs (4/sex/dose) were fed diets containing imidacloprid (94.9%) at 0, 200 or 1,250/2,500 ppm (0, 6.1, 15 or 41/72 mg/kg/day, respectively) for 52 weeks. The 1,250 ppm dose was increased to 2,500 ppm from week 17 onwards. The threshold NOEL was 1250 ppm (41 mg/kg/day). The LOEL was 2,500 ppm (72 mg/kg/day) based on increased cytochrome-P-450 levels in both sexes and was considered to be a threshold dose. Due to the lack of toxicity at 1,250 ppm, a NOEL was not established in this study; following the dose increase to the 2,500 ppm level, toxicity was observed, thus making 1,250 ppm the threshold NOEL and 2,500 ppm the threshold LOEL.

7. In a combined chronic toxicity/carcinogenicity study, groups of Bor WISW rats (50/sex/dose) received imidacloprid (95.3%) at 0, 100, 300 or 900 ppm (0, 5.7, 16.9 or 51.3 mg/kg/day in males and 0, 7.6, 24.9, or 73 mg/kg/day in females, respectively) for 104 weeks. In another study, rats of the same strain (50/sex) received imidacloprid at 0 or 1,800 ppm (0, 102.6 and 143.7 mg/kg/day in males and females, respectively) for 104 weeks. For chronic toxicity, the NOEL was 100 ppm (5.7 mg/kg/day) and the LOEL was 300 ppm (16.9 mg/kg/day) based on decreased body weight gains in females and increased thyroid lesions in males. There was no evidence of carcinogenicity in either sex.

8. In a carcinogenicity study groups of B6C3F1 mice (50/sex/dose) were fed diets containing imidacloprid (95%) at 0, 100, 330 or 1,000 ppm (0, 20, 66 or 208 mg/kg/day in males and 0, 30, 104 or 274 mg/kg/day in females, respectively) for 2 years. In a supplementary study conducted to evaluate the adequacy of the high dose tested in the main study, the same strain of mice (50/sex) received 0 or 2,000 ppm (414 and 424 mg/kg/day in males and females, respectively) for the same time period. For chronic toxicity, the NOEL was 1,000 ppm (208 mg/kg/day). The LOEL was 2,000 ppm (414 mg/kg/day) based on decreased body weight gain, food consumption and water consumption. There was no evidence of carcinogenicity in either sex.

9. In a developmental toxicity study with Sprague-Dawley rats, groups of pregnant animals (25/group) received oral administration of imidacloprid (94.2%) at 0, 10, 30, or 100 mg/kg/day during gestation days 6 through 16. Maternal toxicity was manifested as decreased body weight gain at all dose levels and reduced food consumption at 100 mg/kg/day. No treatment-related effects were seen in any of the reproductive parameters (i.e., cesarean section evaluation). At 100 mg/kg/day, developmental toxicity manifested as wavy ribs (fetus =7/149 in treated vs. 2/158 in controls and litters, 4/25 vs. 1/25). For maternal toxicity, the LOEL was 10 mg/kg/day lowest dose tested (LDT) based on decreased body weight gain; a NOEL was not established. For developmental toxicity, the NOEL was 30 mg/kg/day and the LOEL was 100 mg/kg/day based on increased wavy ribs.

10. In a developmental toxicity study with Chinchilla rabbits, groups of 16 pregnant does were given oral doses of imidacloprid (94.2%) at 0, 8, 24 or 72 mg/kg/day during gestation days 6 through 18. For maternal toxicity, the NOEL was 24 mg/kg/day and the LOEL was 72 mg/kg/day based on mortality,

decreased body weight gain, increased resorptions, and increased abortions. For developmental toxicity, the NOEL was 24 mg/kg/day and the LOEL was 72 mg/kg/day based on decreased fetal body weight, increased resorptions, and increased skeletal abnormalities.

11. In a 2-generation reproductive toxicity study, imidacloprid (95.3%) was administered to Wistar/Han rats at dietary levels of 0, 100, 250, or 700 ppm (0, 7.3, 18.3, or 52.0 mg/kg/day for males and 0, 8.0, 20.5, or 57.4 mg/kg/day for females). For parental/systemic/reproductive toxicity, the NOEL was 250 ppm (18.3 mg/kg/day) and the LOEL was 750 ppm (52 mg/kg/day), based on decreases in body weight in both sexes in both generations. Based on these factors, the Data Evaluation Record should be revised to indicate the parental/systemic/reproductive NOEL and LOEL to be 250 and 700 ppm, respectively, based upon the body weight decrements observed in both sexes in both generations.

12. Studies on gene mutation and other genotoxic effects: an Ames *Salmonella* Assay which was negative up to 5,500 µg/plate concentration; recombination assay-yeast, negative for cross-over in yeast up to 10,000 µg; *In Vivo* Chromasomal Aberration, negative for chromosome breakage up to 2,000 µg/ml; *In Vitro* Chromasomal Aberrations, positive at 500 µg/ml -S9 and 1,300 µg/ml +S9, both toxic doses (acceptable study); *In Vivo* Sister Chromatid assay, negative up to 2,000 µg/ml; *In Vitro* Cytogenetics-CHO cells, negative for producing forward mutation in CHO (mammalian) cells treated up to 1222 µg/ml; Micronucleus - mouse, negative up to (toxic) 50 µg/ml (ip); DNA repair test, negative for cross-over in yeast up to 10,000 µg; HGPRT assay-CHO, negative up to 2,000 µg/ml. Mutagenicity studies have demonstrated that imidacloprid is non-mutagenic both *in vivo* and *in vitro*.

B. Toxicological Endpoints

1. Special sensitivity to infants and children. In assessing the potential for additional sensitivity of infants and children to residues of imidacloprid, EPA considered data from developmental toxicity studies in the rat and rabbit and a 2-generation reproduction study in the rat. These studies are described in unit II A. of this document. The developmental toxicity data demonstrated no increased sensitivity of rats or rabbits to *in utero* exposure to imidacloprid. In addition, the multi-generation reproductive toxicity study data did not identify any increased sensitivity of rats to in utero or postnatal exposure. Parental NOELs were lower or equivalent to developmental or offspring NOELs. The developmental toxicity studies are designed to evaluate adverse effects on the developing organism resulting from maternal pesticide exposure gestation. Reproduction studies provide information relating to effects from exposure to the pesticide on the reproductive capability of mating animals and data on systemic toxicity.

Section 408 of FFDCA provides that EPA shall apply an additional tenfold margin of safety for infants and children in the case of threshold effects to account for pre-and post-natal toxicity and the completeness of the database unless EPA determines that a different margin of safety will be safe for infants and children. Margins of safety are incorporated into EPA risk assessments either directly through use of a MOE analysis or through using uncertainty (safety) factors in calculating a dose level that poses no appreciable risk to humans. EPA believes that reliable data support using the standard uncertainty factor (usually 100 for combined inter- and intra-species variability)) and not the additional tenfold MOE/uncertainty factor when EPA has a complete data base under existing guidelines and when the severity of the effect in infants or children or the potency or unusual toxic properties of a compound do not raise concerns regarding the adequacy of the standard MOE/safety factor.

Although developmental toxicity studies showed no increased sensitivity in fetuses as compared to maternal animals following in utero exposures in rats and rabbits, no increased sensitivity in pups as compared to adults was seen in the two generation reproduction toxicity study in rats, and the toxicology data base is complete as to core requirements, the Agency determined that the additional safety factor for the protection of infants and children will be retained but reduced to 3x based on the following weight-of-the-evidence considerations relating to potential sensitivity and completeness of the data:

(i) There is concern for structure activity relationship. Imidacloprid, a chloronicotinyl compound, is an analog to nicotine and studies in the published literature suggests that nicotine, when administered causes developmental toxicity, including functional deficits, in animals and/or humans that are exposed *in utero*.

(ii) There is evidence that imidacloprid administration causes neurotoxicity following a single oral dose in the acute study and alterations in brain weight in rats in the 2-year carcinogenicity study.

(iii) The concern for structure activity relationship along with the evidence of neurotoxicity dictates the need of a developmental neurotoxicity study for assessment of potential alterations on functional development.

Because a developmental neurotoxicity study potentially relates to both acute and chronic effects in both the mother and the fetus, the additional UF for FQPA is being applied for all population subgroups, and both acute and chronic risk.

2. *Acute toxicity*. Acute dietary risk assessment is required for all population subgroups. LOEL=42 mg/kg/day based on decreased motor activity in female rats; MOE=300, as discussed above. Conventionally, when a LOEL from the critical study is used for risk assessment, an additional UF will be applied. For acute risk assessment with imidacloprid, however, the Committee determined that an additional uncertainty factor is not necessary because: (i) of the low confidence in the endpoint based on the minimal nature of the effect (decreased motor activity only in females); (ii) this effect was seen in adult rats; and (iii) the same effect was not seen in the subchronic toxicity study following repeated doses.

3. *Short - and intermediate - term toxicity*. In a dermal toxicity study, groups of 5 male and 5 female New Zealand White rabbits received repeated dermal applications of imidacloprid (95%) at 1,000 mg/kg/day (Limit Dose), 6 hours/day, 5 days/week for three weeks. No dermal or systemic toxicity was seen. For systemic and dermal toxicity, the NOEL was > 1,000 mg/kg/day; a LOEL was not established (MRID No. 42256329).

In an oral toxicity study, groups of Fischer 344 rats (12/sex/dose) were fed diets containing imidacloprid (98.8%) at 0, 150, 1,000, or 3,000 ppm (0, 9.3, 63.3, or 196 mg/kg/day in males and 0, 10.5, 69.3 or 213 mg/kg/day in females, respectively) for 90 days. No treatment-related effects were seen at 150 ppm. Treatment-related effects included decreases in body weight gain during the first four weeks of the study at 1,000 ppm (22% in males and 18% in females) and 3,000 ppm (50% in males and 25% in females) with an associated decrease in forelimb grip strength especially in males. The NOEL was 150 ppm (9.3 and 10.5 mg/kg/day in males and females, respectively) and the LOEL was 1,000 ppm (63.3 and 69.3 mg/kg/day in males and females, respectively) (MRID No. 43286401).

In a rat inhalation study (28-day study in which rats were exposed 6 hours/day, 5 days a week for 4 weeks), the no observable effect concentration (NOEC)

for imidacloprid was 5.5 mg/m3 (MRID No. 422730-01).

4. *Chronic toxicity*. EPA has established the RfD for 1-[(6-chloro-3-pyridinyl)methyl]-*N*-nitro-2-imidazolidinimine at 0.019 mg/kg/day. This RfD is based upon increased number of thyroid lesions in male and decreased body weight gains in female Bor WISW rats, with a NOEL of 5.7 mg/kg/day, and LOEL of 16.9/24.9 mg/kg/day (males and females respectively); UF=300, as discussed above.

5. *Carcinogenicity*. This chemical has been classified as a Group E - no evidence of carcinogenicity for humans. A cancer risk assessment is not required.

C. Exposures and Risks

1. *From food and feed uses.* Tolerances have been established 40 CFR 180.472(a) for the combined residues of 1-[(6-chloro-3-pyridinyl)methyl]-*N*-nitro-2-imidazolidinimine and its metabolites, in or on a variety of raw agricultural commodities. Risk assessments were conducted by EPA to assess dietary exposures and risks from imidacloprid as follows:

i. *Acute exposure and risk.* Acute dietary risk assessments are performed for a food-use pesticide if a toxicological study has indicated the possibility of an effect of concern occurring as a result of a one day or single exposure. An acute dietary risk assessment is required for all population subgroups.

This acute dietary (food) risk assessment used the Theoretical Maximum Residue Contribution (TMRC). Resulting exposure values and Margins of Exposure (MOEs; MOE = Acute Endpoint ÷ Exposure) are shown below.

Population Subgroup	High-End[1] Exposure (mg/kg/day)	MOE[2]	Exposure @ 99th Percentile (mg/kg/day)	MOE
U.S. population (48 states)	0.10	420	0.05[3]	840
Infants (< 1 yr)	0.15	280	0.10	420
Children (1-6 yrs)	0.15	280	0.10	420
Females (13+ yrs)	0.05	840	0.04	1050
Males (13+ yrs)	0.10	420	0.05	840

[1] > 99.5th Percentile.
[2] MOE = Margin of Exposure.
[3] @ 98th Percentile (U.S. Pop. only).

These results should be viewed as a very conservative risk estimate; refinement using anticipated residue values and percent crop-treated information in conjunction with Monte Carlo analysis would result in a lower estimate (i.e., higher MOE) of acute dietary exposure.

ii. *Chronic exposure and risk.* The endpoint selected for chronic risk assessment is decreased body weight gains in females and increased thyroid lesions observed at 7.6 mg/kg/day in male rats in a combined chronic toxicity/carcinogenicity study. The NOEL was 5.7 mg/kg/day. A UF of 300 is required as discussed above.

In conducting this chronic dietary (food) risk assessment, EPA used: (i) tolerance level residues for pecans, grain sorghum, and all other commodities with published, permanent or time-limited imidacloprid tolerances, the pending proposed tolerance for the citrus crop group; and, (ii) percent crop-treated (%CT) information on some of these crops. Thus, this risk assessment should be viewed as partially refined. Further refinement using anticipated residue values and additional %CT information would result in a lower estimate of chronic dietary exposure.

The results are summarized below.

Population Subgroup	Exposure(mg/kg/day)	%RfD
U.S. Population (48 states)	0.003596	19
Nursing Infants (<1 year old)	0.002824	15
Non-Nursing Infants (<1 year old)	0.009983	53
Children (1-6 years old)	0.007514	40
Children (7-12 years old)	0.005305	28
U.S. Population - Fall Season	0.003716	20
Northeast Region	0.003771	20
Western Region	0.003842	20
Hispanics	0.003879	20
Non-Hispanic Others	0.003906	21

The subgroups listed above are: (1) the U.S. population (48 states); (2) those for infants and children; and, (3) the other subgroups for which the percentage of the RfD occupied is greater than that occupied by the subgroup U.S. population (48 states).

Section 408(b)(2)(F) states that the Agency may use data on the actual percent of food treated for assessing chronic dietary risk only if the Agency can make the following findings: (1) that the data used are reliable and provide a valid basis for showing the percentage of food derived from a crop that is likely to contain residues; (2) that the exposure estimate does not underestimate the exposure for any significant subpopulation and; (3) where data on regional pesticide use and food consumption are available, that the exposure estimate does not understate exposure for any regional population. In addition, the Agency must provide for periodic evaluation of any estimates used. To provide for the periodic evaluation of these estimates of percent crop treated as required by the section 408(b)(2)(F), EPA may require registrants to submit data on percent crop treated.

The Agency used percent crop treated (PCT) information as follows. A routine chronic dietary exposure analysis for imidacloprid was based on likely maximum percent of crop treated as follows: 6% grapefruits, 3% oranges, 13% other citrus, 19% apples, 2% pears, 11% grapes, 30% eggplants/peppers, 32% head lettuce, 21% cole crops, 15% melons, 10% tomatoes, 6% cotton.

The Agency believes that the three conditions listed above have been met. With respect to (1), EPA finds that the PCT information described above for imidacloprid is reliable and has a valid basis, The Agency has utilized the latest statistical data from RFF (Resources For The Future), DOANE, and USDA, the best available sources for such information. Concerning (2) and (3), regional consumption information and consumption information for significant subpopulations is taken into account through EPA's computer-based model

for evaluating the exposure of significant subpopulations including several regional groups. Use of this consumption information in EPA's risk assessment process ensures that EPA's exposure estimate does not understate exposure for any significant subpopulation group and allows the Agency to be reasonably certain that no regional population is exposed to residue levels higher than those estimated by the Agency. Other than data available through national food consumption surveys, EPA does not have available information on the consumption of food bearing imidacloprid in a particular area.

2. *From drinking water*. EPA used the estimated environmental concentration (EEC) data to calculate acute and chronic exposure estimates for imidacloprid in surface water using the following formulas:

Adult Male: Exposure (mg/kg/day) = (chemical concentration in µg/L in consumed water) * (10^{-3} mg/µg) ÷ (70 kg body weight) * (2 L water consumed/day)

Adult Female: Exposure (mg/kg/day) = (chemical concentration in g/L in consumed water) * (10-3 mg/µg) ÷ (60 kg body weight) * (2 L water consumed/day)

Child (1-6 years): Exposure (mg/kg/day) = (chemical concentration in µg/L in consumed water) * (10^{-3} mg/µg) ÷ (10 kg body weight) * (1 L water consumed/day)

Acute MOE: Acute Endpoint (42 mg/kg/day) ÷ Exposure (mg/kg/day)

Chronic Risk (%RfD): Exposure (mg/kg/day) ÷ RfD (0.019 mg/kg/day) * 100

The 2 liters (L) of drinking water consumed/day by adults and the 1 L per day consumed by children are default assumptions used by the Office of Water. The Agency's default body weights for males is 70 kg and for females, 60 kg. HED's default body weight for children is 10 kg.

The results are summarized below:

Population Sub-group	Acute Scenario			Chronic Scenario		
	µg/L in Water Consumed	Exposure (mg/kg/day)	MOE	µg/L in Water Consumed	Exposure (mg/kg/day)	% RfD
Adult male	50.9	0.00145	29,000	19.1	0.00055	2.9
Adult Female	50.9	0.00170	24,700	19.1	0.00064	3.4
Child (1-6 yrs)	50.9	0.00509	8,250	19.1	0.00191	10.1

These results should be viewed as a very conservative risk estimate. Refinement by applying factors to account for the percent of acreage planted in a watershed, the percent of crop-treated, and the water flow rate would result in a lower estimate of acute and chronic exposure from consumption of surface waters containing imidacloprid residues.

3. *From non-occupational non-dietary exposure*. Imidacloprid is currently registered for use on the following residential non-food sites: ornamentals (e.g., flowering and foliage plants, ground covers, turf, lawns, et al.), tobacco, golf courses, walkways, recreational areas, bathrooms, household or domestic dwellings (indoor/outdoor), cats/dogs, and wood protection treatment to buildings. Available data do not demonstrate that imidacloprid has either dermal or inhalation toxicity potential, therefore, non-occupational non-dietary risk assessments are not required. Since data show no toxicity from short term exposure via the dermal or inhalation route, the Agency feels there is no contribution to toxicity from these routes of exposure, and no increase in aggregate risk is anticipated from this exposure. Therefore residential exposure does not aggregate with dietary exposure for any risk assessments.

4. *Cumulative exposure to substances with common mechanism of toxicity*. Section 408(b)(2)(D)(v) requires that, when considering whether to establish, modify, or revoke a tolerance, the Agency consider ''available information'' concerning the cumulative effects of a particular pesticide's residues and ''other substances that have a common mechanism of toxicity.'' An explanation of the current Agency approach to assessment of pesticides with a common mechanism of toxicity may be found in the Final Rule on Bifenthrin Pesticide Tolerances in the **Federal Register**, of November 26, 1997, (62 FR 62961–62970)(FRL–5754–7).

EPA does not have, at this time, available data to determine whether imidacloprid has a common mechanism of toxicity with other substances or how to include this pesticide in a cumulative risk assessment. Unlike other pesticides for which EPA has followed a cumulative risk approach based on a common mechanism of toxicity, imidacloprid does not appear to produce a toxic metabolite produced by other substances. For the purposes of this tolerance action, therefore, EPA has not assumed that imidacloprid has a common mechanism of toxicity with other substances. Imidacloprid is the sole member to date of the new chloronicotinyl class of pesticides.

D. Aggregate Risks and Determination of Safety for U.S. Population, Infants and Children

1. *Acute risk*. Acute aggregate dietary risk (combined food and water) is estimated by adding the acute exposures to food and water (highest of ground or surface water) and comparing this exposure to the acute dietary endpoint:

Aggregate MOE_{ACUTE} = acute dietary endpoint ÷ aggregate exposure.

The results of the acute aggregate dietary (food and water) risk assessment are given below.

Population Subgroup	Exposure from Food (mg/kg/day)	Exposure from Surface Water (mg/kg/day)	Aggregate Exposure (mg/kg/day)	Aggregate Acute MOE
U.S. population (48 states)	0.101	0.0023	0.102	412
Infants (<1 yr)	0.102	0.0054	0.105	4005
Children (1-6 yrs)	0.102	0.005	0.105	4005
Females (13+ yrs)	0.051	0.002	0.052	808
Males (13+ yrs)	0.101	0.002	0.102	412

[1] High-End Exposure (>99.5th Percentile).
[2] Exposure @ 99th percentile; high-end exposure = 0.15 mg/kg/day.

[3] 3 Exposure value used was that calculated for females (13+ years) and males (13+ years).
[4] Exposure value used was that calculated for children (1-6 years).
[5] Based on exposure @ 99th percentile; MOE is 271 @ high-end exposure (>99.5th percentile).

For imidacloprid, an (aggregate) acute dietary MOE of ≥300 is needed to protect the safety of all population subgroups. The aggregate MOEs for the general population, females (13+ years), and males (13+ years) are >400 at the high-end exposure. The aggregate MOEs for infants and children are calculated to be 400 at the 99th percentile of exposure, and 271 at the high-end exposure (>99.5th percentile).

In conducting the acute dietary (food) risk assessment the Theoretical Maximum Residue Contribution (TMRC) was used. There was no refinement using anticipated residue values and percent crop-treated information in conjunction with Monte Carlo analysis which would result in a much lower estimate (i.e., higher MOE) of acute dietary exposure.

Because of the very conservative nature of the assumptions used in these calculations, and the fact that refinement would lower the risk estimates (i.e., result in higher MOE values) for both MOE_{food} and MOE_{water}, EPA concludes that there is a reasonable certainty that no harm will result to infants, children, or adults from acute aggregate risk (food and water) exposure to imidacloprid residues.

2. *Chronic risk.* Dermal and inhalation exposure endpoints were not selected due to the demonstrated absence of toxicity, thus, there is no residential component for assessing chronic aggregate exposure and risk.

In conducting the chronic dietary (food) risk assessment, EPA used: (i) tolerance level residues for pecans, grain sorghum, and all other commodities with published, permanent or time-limited imidacloprid tolerances, the pending proposed tolerance for the citrus crop group; and, (ii) percent crop-treated (%CT) information on some of these crops. Thus, this risk assessment should be viewed as partially refined. Further refinement using anticipated residue values and additional %CT information would result in a lower estimate of chronic dietary exposure.

Chronic aggregate dietary risk (combined food and water) will be estimated by adding the chronic exposures to food and water (highest of ground or surface water) and comparing this exposure to the RfD:

Aggregate %RfD Occupied = (aggregate exposure ÷ RfD) x 100.

The results of the chronic aggregate dietary (food and water) risk assessment are given below.

Population Subgroup	Exposure from Food (mg/kg/day)	Exposure from Surface Water (mg/kg/day)	Aggregate Exposure (mg/kg/day)	% RfD Occupied
U.S. population (48 states)	0.0036	0.00061	0.0042	22
Nursing infants (<1 yr old)	0.0028	0.00192	0.0047	25
Non-nursing infants (<1 yr old)	0.0100	0.00192	0.0119	63
Children (1-6 yrs old)	0.0075	0.0019	0.0094	49
Children (7-12 yrs old)	0.0053	0.00192	0.0072	38

[1] Used average value based on adult male (0.00055 mg/kg/day) and adult female (0.00064 mg/kg/day).
[2] Data not available; used the value for children (1-6 years).

This chronic aggregate dietary risk assessment is based on conservative exposure consumptions. Refinement of the assumptions used in estimating exposure from food and water sources would result in lower estimates of chronic aggregate dietary risk.

The calculated results indicate that the aggregate dietary exposure to imidacloprid utilizes 22% of the RfD for the U.S. general population.

For infants and children, the percentage of the RfD that is utilized by aggregate dietary exposure to imidacloprid ranges from 25% for nursing infants less than 1 year old, up to 63% for non-nursing infants less than 1 year old.

The Agency generally has no concern for exposures below 100% of the RfD because the RfD represents the level at or below which daily aggregate dietary exposure over a lifetime will not pose appreciable risks to human health.

EPA concludes that there is a reasonable certainty that no harm will result to infants, children, or adults from chronic aggregate (food plus water) exposure to imidacloprid residues.

3. *Short - intermediate - term risk.* Short - and intermediate - term aggregate exposure take into account chronic dietary food and water plus indoor and outdoor residuential exposure. This risk assessment is not required for imidacloprid.

E. Aggregate Cancer Risk for U.S. Population

Imidacloprid has been classified as a Group E chemical, no evidence of carcinogenicity for humans, therefore, a cancer risk assessment is not required.

III. Other Considerations

A. Metabolism In Plants and Animals

The nature of imidacloprid residues in plants and animals is adequately understood. The residue of concern is imidacloprid and its metabolites containing the 6-chloropyridinyl moiety, all expressed as parent, as specified in 40 CFR 180.472.

B. Analytical Enforcement Methodology

Adequate enforcement methods are available for determination of the regulated imidacloprid residue in plant (Bayer GC/MS Method 00200 and Bayer HPLC-UV Confirmatory Method 00357) and animal (Bayer GC/MS Method 00191) commodities. The limit of quantitaion (LOQ) is 0.05 ppm, and the limit of detection (LD) is 0.01 ppm for grain sorgum, sorghum forage and fodder. These methods have successfully completed EPA Tolerance Method Validation, and are awaiting publication in Pesticide Analytical Manual II (PAM II). In the interim, these methods are available from Calvin Furlow, EPA, OPP, IRSD, PIRIB.

C. Magnitude of Residues

A total of three field residue trials were conducted in 1995 in three different states, located in Regions 6, 7, and 8. A single application of imidacloprid was made to seed at a rate of 1X. Two replicate samples of forage were harvested from each treated plot 90-119 days after planting; samples of grain and fodder, 118-139 days. The samples were frozen and analyzed within 3 months of harvest, using the validated enforcement method. The average recovery was 82 ± 10% in grain,

79 ± 4% in forage, and 83 ± 6% in fodder. Analyses of the treated samples showed that the total residues of imidacloprid and its metabolites were <0.05 ppm. These results support tolerances for residues of imidacloprid and its metabolites at 0.05 ppm for sorghum grain, and for sorghum forage and fodder at 0.1 ppm.

D. Magnitude of the Residue in Processed Commodities

There are no detectable total imidacloprid residues at or above the LOQ of 0.05 ppm in the rac sorghum grain from an exaggerated 2X seed treatment application, thus a sorghum processing study is not required.

E. Magnitude of Secondary Residues in Meat/Milk/Poultry/Eggs

Based on the results of the imidacloprid bovine and poultry feeding studies, finite residues will occur in meat, milk, poultry, and eggs from the feeding of imidacloprid treated racs or their processed feed items from seed treatment uses. Adequate total imidacloprid secondary tolerances have been established at 0.1 ppm in milk, 0.3 ppm in meat, fat, and meat by-products of cattle, goats, hogs, horses, and sheep, 0.02 ppm in eggs, and 0.05 ppm in meat, fat, and meat by-products of poultry, to cover this seed treatment use in/on sorgum.

F. Rotational Crop Restrictions.

Adequate limited field rotational crop studies have been presented from 3 sites with an in-furrow soil application of the 2.5% granular formulation and soil aged 1, 4, 8, and 11 months before replanting with the cereal grains wheat or sorghum, turnips as the root crop, and mustard greens or spinach as the leafy vegetable. Total imidacloprid residues were at or about the minimum detection limit (MDL) of 0.01 ppm by 11 months. Total imidacloprid residues present would be less after 12 months in cereal or small grains, root crops, or leafy vegetables. These limited field crop rotational studies with the 3 crop groups support an overall 12 month plant back restriction for no detectable residues to be present in rotated crops. No rotational crop imidacloprid tolerances are necessary with such a restriction.

G. International Residue Limits

There are no CODEX or Mexican maximum residue limits (MRLs) for imidacloprid on any crop. There are Canadian MRLs for combined residues of imidacloprid plus metabolites with the 6-chlorophenyl moiety, but not on grain sorghum. International compatibility is thus not an issue.

IV. Conclusion

Therefore, the tolerance is established for residues of 1-[(6-chloro-3-pyridinyl)methyl]-*N*-nitro-2-imidazolidinimine and its metabolites in or on grain sorghum at 0.05 ppm, grain sorghum forage and stover at 0.10 ppm.

V. Objections and Hearing Requests

The new FFDCA section 408(g) provides essentially the same process for persons to ''object'' to a tolerance regulation issued by EPA under new section 408(e) and (l)(6) as was provided in the old section 408 and in section 409. However, the period for filing objections is 60 days, rather than 30 days. EPA currently has procedural regulations which govern the submission of objections and hearing requests. These regulations will require some modification to reflect the new law. However, until those modifications can be made, EPA will continue to use those procedural regulations with appropriate adjustments to reflect the new law.

Any person may, by May 26, 1998, file written objections to any aspect of this regulation and may also request a hearing on those objections. Objections and hearing requests must be filed with the Hearing Clerk, at the address given above (40 CFR 178.20). A copy of the objections and/or hearing requests filed with the Hearing Clerk should be submitted to the OPP docket for this rulemaking. The objections submitted must specify the provisions of the regulation deemed objectionable and the grounds for the objections (40 CFR 178.25). Each objection must be accompanied by the fee prescribed by 40 CFR 180.33(i). If a hearing is requested, the objections must include a statement of the factual issues on which a hearing is requested, the requestor's contentions on such issues, and a summary of any evidence relied upon by the requestor (40 CFR 178.27). A request for a hearing will be granted if the Administrator determines that the material submitted shows the following: There is genuine and substantial issue of fact; there is a reasonablepossibility that available evidence identified by the requestor would, if established, resolve one or more of such issues in favor of the requestor, taking into account uncontested claims or facts to the contrary; and resolution of the factual issues in the manner sought by the requestor would be adequate to justify the action requested (40 CFR 178.32). Information submitted in connection with an objection or hearing request may be claimed confidential by marking any part or all of that information as CBI. Information so marked will not be disclosed except in accordance with procedures set forth in 40 CFR part 2. A copy of the information that does not contain CBI must be submitted for inclusion in the public record. Information not marked confidential may be disclosed publicly by EPA without prior notice.

VI. Public Docket

EPA has established a record for this rulemaking under docket control number [OPP–300628] (including any comments and data submitted electronically). A public version of this record, including printed, paper versions of electronic comments, which does not include any information claimed as CBI, is available for inspection from 8:30 a.m. to 4 p.m., Monday through Friday, excluding legal holidays. The public record is located in Room 119 of the Public Information and Records Integrity Branch, Information Resources and Services Division (7502C), Office of Pesticide Programs, Environmental Protection Agency, Crystal Mall #2, 1921 Jefferson Davis Highway, Arlington, VA.

Electronic comments may be sent directly to EPA at:

opp-docket@epamail.epa.gov.

Electronic comments must be submitted as an ASCII file avoiding the use of special characters and any form of encryption.

The official record for this rulemaking, as well as the public version, as described above will be kept in paper form. Accordingly, EPA will transfer any copies of objections and hearing requests received electronically into printed, paper form as they are received and will place the paper copies in the official rulemaking record which will also include all comments submitted directly in writing. The official rulemaking record is the paper record maintained at the Virginia address in ''ADDRESSES'' at the beginning of this document.

VII. Regulatory Assessment Requirements

This final rule establishes tolerances for the residues of imidacloprid and its metabolites in or on grain sorghum at 0.05 ppm, grain sorghum forage and stover at 0.10 ppm under FFDCA section 408(d) in response to a petition submitted to the Agency. The Office of Management and Budget (OMB) has exempted these types of actions from review under Executive Order 12866, entitled Regulatory Planning and Review (58 FR 51735, October 4, 1993).

This final rule does not contain any information collections subject to OMB approval under the Paperwork Reduction Act (PRA), 44 U.S.C. 3501 *et seq.*, or impose any enforceable duty or contain any unfunded mandate as described under Title II of the Unfunded Mandates Reform Act of 1995 (UMRA) (Pub. L. 104-4). Nor does it require any prior consultation as specified by Executive Order 12875, entitled Enhancing the Intergovernmental Partnership (58 FR 58093, October 28, 1993), or special considerations as required by Executive Order 12898, entitled Federal Actions to Address Environmental Justice in Minority Populations and Low-Income Populations (59 FR 7629, February 16, 1994), or require OMB review in accordance with Executive Order 13045, entitled Protection of Children from Environmental Health Risks and Safety Risks (62 FR 19885, April 23, 1997).

In addition, since these tolerances and exemptions that are established on the basis of a petition under FFDCA section 408(d), such as the tolerances for the residues of imidacloprid and its metabolites in or on grain sorghum at 0.05 ppm, grain sorghum forage and stover at 0.10 ppm in this final rule, do not require the issuance of a proposed rule, the requirements of the Regulatory Flexibility Act (RFA) (5 U.S.C. 601 *et seq.*) do not apply. Nevertheless, the Agency has previously assessed whether establishing tolerances, exemptions from tolerances, raising tolerance levels or expanding exemptions might adversely impact small entities and concluded, as a generic matter, that there is no adverse economic impact. The factual basis for the Agency's generic certification for tolerance actions published on May 4, 1981 (46 FR 24950) and was provided to the Chief Counsel for Advocacy of the Small Business Administration.

VIII. Submission to Congress and the Comptroller General

The Congressional Review Act, 5 U.S.C. 801 *et seq.*, as added by the Small Business Regulatory Enforcement Fairness Act of 1996, generally provides that before a rule may take effect, the agency promulgating the rule must submit a rule report, which includes a copy of the rule, to each House of the Congress and to the Comptroller General of the United States. EPA will submit a report containing this rule and other required information to the U.S. Senate, the U.S. House of Representatives, and the Comptroller General of the United States prior to publication of the rule in the **Federal Register**. This rule is not a ''major rule'' as defined by 5 U.S.C. 804(2).

List of Subjects in 40 CFR Part 180

Environmental protection, Administrative practice and procedure, Agricultural commodities, Pesticides and pests, Reporting and recordkeeping requirements.

Dated: March 16, 1998

James Jones,

Director, Registration Division, Office of Pesticide Programs.

Therefore, 40 CFR chapter I is amended as follows:

PART 180–[AMENDED]

1. The authority citation for part 180 continues to read as follows:

Authority: 21 U.S.C. 346a and 371.

2. Section 180.472, paragraph (a) is amended by alphabetically adding the commodities to read as follows:

§ 180.472 Imidacloprid; tolerances for residues.

(a) * * *

Commodity	Parts per million
* * * * * * *	
Grain, sorghum	0.05
Grain, sorghum forage	0.10
Grain, sorghum stover	0.10
* * * * * * *	

* * * * *

[FR Doc. 98–7646 Filed 3–24–98; 8:45 am]

BILLING CODE 6560–50–F

DEPARTMENT OF THE INTERIOR

Fish and Wildlife Service

50 CFR Part 17

RIN 1018–AE95

Endangered and Threatened Wildlife and Plants; Revocation of Critical Habitat for the Mexican Spotted Owl, Loach Minnow, and Spikedace

AGENCY: Fish and Wildlife Service, Interior.

ACTION: Final rule; notice of revocation of critical habitat.

SUMMARY: Due to several Federal court orders, the Fish and Wildlife Service (Service) amends the List of Threatened and Endangered Wildlife (50 CFR 17.11) to remove critical habitat designations for the Mexican spotted owl (*Strix occidentalis lucida*), spikedace (*Meda fulgida*), and loach minnow (*Rhinichthys cobitis*), pursuant to the Endangered Species Act of 1973, as amended (Act). Critical habitat is also removed from 50 CFR 17.95(b) (Mexican spotted owl) and 17.95(e) (loach minnow and spikedace).

DATES: This final rule is effective March 25, 1998.

ADDRESSES: The file for this revocation is available for inspection, by appointment, during normal business hours at the U.S. Fish and Wildlife Service, Division of Ecological Services, 500 Gold Avenue Southwest, Albuquerque, New Mexico 87102.

FOR FURTHER INFORMATION CONTACT: Renne Lohoefener, Assistant Regional Director, Ecological Services, U.S. Fish and Wildlife Service, telephone 505/248–6920.

SUPPLEMENTARY INFORMATION:

Background

The Service designated critical habitat for the loach minnow and spikedace on March 8, 1994 (59 FR 10898 and 59 FR 10906, respectively). However, on October 13, 1994, the United States District Court for the District of New Mexico set aside the critical habitat designation for the two species, ruling that the Service is required to analyze the effects of critical habitat designation under the National Environmental Policy Act (NEPA). In 1996 the Tenth Circuit affirmed this decision. The District Court's decision setting aside the critical habitat designation became effective when the appeal process for the case was completed. (*Catron County Board of Commissioners, New Mexico* v. *U.S. Fish and Wildlife Service*, CIV No.

93–730 HB, (D.N.M. 1994), *aff'd by* 75 F.3d 1429 (10th Cir. 1996)). The critical habitat designated for these two species occurred also in Arizona which is in the Ninth Circuit where NEPA is not required for critical habitat designations; however, in 1996 the United States District Court for the District of Arizona acknowledged that the set aside in the *Catron County* case also applied in Arizona. (*Southwest Center for Biological Diversity* v. *Rogers*, CV 96–018–TUC–JMR (D. Ariz. 1996)).

The Service designated critical habitat for the Mexican spotted owl on June 6, 1995 (60 FR 29914). On March 4, 1997, the United States District Court for the District of New Mexico set aside that critical habitat designation, again for the Service's failure to complete the NEPA process (*Coalition of Arizona/New Mexico Counties for Stable Economic Growth* v. *U.S. Fish and Wildlife Service*, CIV No. 95–1285–M (D.N.M. 1997)).

Pursuant to the decisions of the New Mexico District Courts, the Service, by publication of this revocation, removes critical habitat for the loach minnow, spikedace, and Mexican spotted owl from the List of Endangered and Threatened Wildlife (17.11) and from the Code of Federal Regulations at 50 CFR 17.95(b) (Mexican spotted owl) and 17.95(e) (loach minnow and spikedace). Further, this revocation gives notice to Federal agencies and interested individuals that the Service will no longer consider critical habitat for the three species for the purpose of conducting section 7 consultation.

Pursuant to 5 U.S.C. 553(d), the requirement for a 30-day delay in the effective date following publication of this revocation is waived. Because critical habitat for these species has been set aside by the United States District Court for the District of New Mexico, the Service believes there is good cause to issue this rule effective immediately.

Required Determinations

This revocation does not contain collections of information that require approval by the Office of Management and Budget under 44 U.S.C. 3501 *et seq.*

References Cited

A complete list of all references cited herein is available upon request from the U.S. Fish and Wildlife Service, Division of Ecological Services (see **ADDRESSES** section).

Author: The author of this document is Steven L. Spangle, Division of Ecological Services (see **ADDRESSES** section).

List of Subjects in 50 CFR Part 17

Endangered and threatened species, Exports, Imports, Reporting and recordkeeping requirements, Transportation.

Regulation Promulgation

Accordingly, the Service hereby amends part 17, subchapter B of chapter I, title 50 of the Code of Federal Regulations, as set forth below:

PART 17—[AMENDED]

1. The authority citation for part 17 continues to read as follows:

Authority: 16 U.S.C. 1361–1407; 16 U.S.C. 1531–1544; 16 U.S.C. 4201–4245; Pub. L. 99–625, 100 Stat. 3500, unless otherwise noted.

§ 17.11 [Amended]

2. Amend section 17.11(h) by revising the ''Critical Habitat'' column in the table entry for ''Owl, Mexican spotted'' under BIRDS to read ''NA.''

3. Amend section 17.11(h) by revising the ''Critical Habitat'' column in the table entry for ''Minnow, loach'' under FISHES to read ''NA.''

4. Amend section 17.11(h) by revising the ''Critical Habitat'' column in the table entry for ''Spikedace'' under FISHES to read ''NA.''

§ 17.95 [Amended]

5. Amend section 17.95(b) by removing critical habitat maps and associated text for the ''Mexican Spotted Owl.''

6. Amend section 17.95(e) by removing critical habitat maps and associated text for the ''Loach Minnow.''

7. Amend section 17.95(e) by removing critical habitat maps and associated text for the ''Spikedace.''

Dated: March 18, 1998.

Daniel M. Ashe,

Acting Director, Fish and Wildlife Service.

[FR Doc. 98–7620 Filed 3–24–98; 8:45 am]

BILLING CODE 4310–55–P

DEPARTMENT OF COMMERCE

National Oceanic and Atmospheric Administration

50 CFR Part 679

[I.D. 031398C]

Fisheries of the Exclusive Economic Zone off Alaska; Community Development Quota Program

AGENCY: National Marine Fisheries Service (NMFS), National Oceanic and Atmospheric Administration (NOAA), Department of Commerce.

ACTION: Approval of the Community Development Plans for Pacific halibut, fixed gear sablefish, and crab for the years 1998–2000.

SUMMARY: NMFS announces the approval of recommendations made by the State of Alaska (State) for the 1998–2000 halibut, fixed gear sablefish, and crab Community Development Plans (CDPs) under the Western Alaska Community Development Quota (CDQ) Program. This action announces the decision by NMFS to approve the State's recommended CDPs, including the percentage allocations of the halibut, fixed gear sablefish, and crab CDQ reserves to each CDP, and the availability of findings underlying NMFS's decision. This action is intended to further the goals and objectives of the Magnuson-Stevens Fishery Conservation and Management Act.

DATES: Approval of the CDPs is effective March 23, 1998.

ADDRESSES: Copies of the findings made by NMFS in approving the State's recommendations may be obtained from the Alaska Region, National Marine Fisheries Service, P.O. Box 21668, Juneau, AK 99802, Attn: Lori Gravel.

FOR FURTHER INFORMATION CONTACT: Sally Bibb, 907–586–7228.

SUPPLEMENTARY INFORMATION:

Background

The CDQ Program for Pacific halibut and fixed gear sablefish was developed by the North Pacific Fishery Management Council (Council) and implemented by NMFS under regulations at subpart C of 50 CFR part 679. The Crab CDQ Program was developed by the Council as part of Amendment 5 to the Fishery Management Plan (FMP) for the Commercial King and Tanner Crab Fisheries in the Bering Sea and Aleutian Islands Area which was approved by NMFS on September 12, 1997. Regulations implementing the crab CDQ reserves were published by NMFS in the **Federal Register** on February 19, 1998 (63 FR 8356).

Eligible western Alaska communities submitted six proposed CDPs to the State under § 679.30. The CDPs included requests for allocations of the available Pacific halibut, sablefish, and crab CDQ reserves established at § 679.31. The State conducted a public hearing on September 9, 1997, in Anchorage, AK, during which all interested persons had an opportunity to be heard. The hearing covered the substance and content of the proposed CDPs in such a manner that the general public, and particularly the affected parties, had a reasonable opportunity to

understand the impact of each proposed CDP. The State made available for public review all State of Alaska materials pertinent to the hearing at the time the hearing was announced. The public hearing held by the State satisfied the requirements of § 679.30(a)(2).

The State consulted the Council concerning the proposed CDPs during the Council's September 1997 meeting. The Council reviewed copies of the CDP executive summaries, summary sheets, and the State's recommended allocations, and concurred with the State's recommendations.

The State sent its recommendations for approval of the proposed CDPs to NMFS on February 20, 1998. NMFS has determined that the State's recommendations for approval of proposed CDPs are consistent with the community eligibility conditions and evaluation criteria and other applicable provisions of the Federal regulations governing the CDQ Program.

As required by § 679.30(c)(1)(iii), NMFS publishes this notice of approval of the State's recommendations, including the CDQ allocated to each CDP (see following table), and announces the availability of the findings by the Secretary of Commerce regarding this decision (see **ADDRESSES**).

TABLE—STATE OF ALASKA 1998–2000 HALIBUT, FIXED GEAR SABLEFISH, AND CRAB COMMUNITY DEVELOPMENT QUOTA ALLOCATION RECOMMENDATIONS

CDQ allocation	Community development quota group					
	APICDA [1] (percent)	BBEDC [2] (percent)	CBSFA [3] (percent)	CVRF (percent)	NSEDC [4] (percent)	YDFDA [5] (percent)
Halibut:						
Area 4B	100	0	0	0	0	0
Area 4C	10	0	90	0	0	0
Area 4D	0	23	0	24	26	27
Area 4E	0	30	0	70	0	0
Fixed Gear Sablefish:						
Aleutian Islands	15	20	0	30	20	15
Bering Sea	15	22	18	0	20	25
Crab:						
Bristol Bay Red King Crab	20	20	0	20	20	20
Norton Sound Red King Crab	0	0	0	0	50	50
Pribilof Red & Blue King Crab	0	0	100	0	0	0
St. Matthew Blue King Crab	50	12	0	12	14	12
Bering Sea C. opilio crab	10	19	19	17	18	17
Bering Sea c. bairdi crab	10	19	19	17	18	17

[1] APICDA = Aleutian Pribilof Island Community Development Association.
[2] BBEDC = Bristol Bay Economic Development Corporation.
[3] CBSFA = Central Bering Sea Fishermen's's Association.
[4] NSEDC = Norton Sound Economic Development Corporation.
[5] YDFDA = Yukon Delta Fisheries Development Association.

CDQ fishing for halibut and fixed gear sablefish is authorized beginning March 15, 1998, under § 679.23 and CDQ fishing for crab is authorized beginning March 23, 1998 (the effective date of the final rule implementing the crab CDQ reserves).

Dated: March 20, 1998.

Bruce C. Morehead,

Acting Director, Office of Sustainable Fisheries, National Marine Fisheries Service.

[FR Doc. 98–7800 Filed 3–20–98; 4:29 pm]

BILLING CODE 3510–22–P

Proposed Rules

Federal Register
Vol. 63, No. 57
Wednesday, March 25, 1998

This section of the FEDERAL REGISTER contains notices to the public of the proposed issuance of rules and regulations. The purpose of these notices is to give interested persons an opportunity to participate in the rule making prior to the adoption of the final rules.

NUCLEAR REGULATORY COMMISSION

10 CFR Part 33

RIN 3150–AF54

Specific Domestic Licenses of Broad Scope for Byproduct Material

AGENCY: U.S. Nuclear Regulatory Commission.

ACTION: Advance Notice of Proposed Rulemaking: Withdrawal.

SUMMARY: The U.S. Nuclear Regulatory Commission is withdrawing an Advance Notice of Proposed Rulemaking (ANPR) that discussed possible changes to the regulations governing specific domestic licenses of broad scope for byproduct material. Additionally, NRC is announcing plans to finalize draft guidance currently contained in Draft Regulatory Guide DG–0005, ''Applications for Licenses of Broad Scope, Revision 2,'' as a NUREG.

FOR FURTHER INFORMATION CONTACT: Torre Taylor, U.S. Nuclear Regulatory Commission, Office of Nuclear Material Safety and Safeguards, MS T8F5, Washington, DC 20555, Telephone (301) 415–7900.

SUPPLEMENTARY INFORMATION: On November 14, 1996 (61 FR 58346), the Commission published an ANPR for 10 CFR Part 33, ''Specific Domestic Licenses of Broad Scope for Byproduct Material.'' In the ANPR, the Commission explained that it is considering amending these regulations to clarify the regulatory and health and safety basis of current licensing practices and to provide licensees with the flexibility to make certain types of changes to their radiation safety programs.

The comment period expired February 12, 1997. The Commission received 22 comments on the ANPR. The commenters were composed of broad scope academic and medical facilities; professional associations; private citizens; an Agreement State program; a Federal government agency; and private industry. The majority of commenters responded negatively to the ANPR. After reviewing the comments, NRC has decided to withdraw the ANPR.

NRC is announcing plans to finalize draft guidance currently contained in Draft Regulatory Guide DG–0005, ''Applications for Licenses of Broad Scope, Revision 2,'' as a NUREG. This NUREG will update existing draft guidance and will be published for public comment. A notice of availability of the NUREG will be published in the **Federal Register**. This effort is part of an ongoing project to update and consolidate existing guidance. As part of this project, the NRC staff plans to evaluate the licensing process and license conditions for ways to provide greater flexibility for broad scope licensees to modify their program without seeking a license amendment within the constraints of the existing regulations in 10 CFR Part 33. All comments received in response to the ANPR will be considered in the development of this NUREG.

Dated at Rockville, Maryland, this 19th day of March, 1998.

For the Nuclear Regulatory Commission.

John C. Hoyle,

Secretary of the Commission.

[FR Doc. 98–7808 Filed 3–24–98; 8:45 am]

BILLING CODE 7590–01–P

DEPARTMENT OF TRANSPORTATION

Federal Aviation Administration

14 CFR Part 25

[Docket No. NM147; Notice No. 25–98–02–SC]

Special Conditions: Boeing Model 757–300; High-Intensity Radiated Fields

AGENCY: Federal Aviation Administration, DOT.

ACTION: Notice of proposed special conditions.

SUMMARY: This notice proposes special conditions for the Boeing Model 757–300. This airplane will utilize new avionics/electronic systems that provide critical data to the flightcrew. The applicable regulations do not contain adequate or appropriate safety standards for the protection of these systems from the effects of high-intensity radiated fields. These proposed special conditions contain the additional safety standards that the Administrator considers necessary to establish a level of safety equivalent to that established by the existing airworthiness standards.

DATES: Comments must be received on or before April 24, 1998.

ADDRESSES: Comments on this proposal may be mailed in duplicate to: Federal Aviation Administration, Office of the Regional Counsel, Attn: Rules Docket (ANM–7), Docket No. NM147, 1601 Lind Avenue SW., Renton, Washington, 98055–4056; or delivered in duplicate to the Office of the Regional Counsel at the above address. Comments must be marked: Docket No. NM147. Comments may be inspected in the Rules Docket weekdays, except Federal holidays, between 7:30 a.m. and 4:00 p.m.

FOR FURTHER INFORMATION CONTACT: John Dimtroff, FAA, Airplane and Flight Crew Interface Branch, ANM–111, Transport Airplane Directorate, Aircraft Certification Service, 1601 Lind Avenue SW., Renton, Washington, 98055–4056, telephone (425) 227–2117 or facsimile (425) 227–1320.

SUPPLEMENTARY INFORMATION:

Comments Invited

Interested persons are invited to participate in the making of these proposed special conditions by submitting such written data, views, or arguments as they may desire. Communications should identify the regulatory docket or notice number and be submitted in duplicate to the address specified above. All communications received on or before the closing date for comments will be considered by the Administrator before further rulemaking action on this proposal is taken. The proposals contained in this notice may be changed in light of the comments received. All comments received will be available, both before and after the closing date for comments, in the Rules Docket for examination by interested parties. A report summarizing each substantive public contact with FAA personnel concerning this rulemaking will be filed in the docket. Commenters wishing the FAA to acknowledge receipt of their comments submitted in response to this notice must include a self-addressed, stamped postcard on which the following statement is made: ''Comments to Docket No. NM147.'' The

postcard will be date stamped and returned to the commenter.

Background

On February 21, 1996, the Boeing Commercial Airplane Group, P. O. Box 3707, Seattle, Washington 98124–2207, applied for an amendment to Type Certificate No. A2NM to include the new Model 757–300, a derivative of the 757–200. The 757–300 is a swept-wing, conventional-tail, twin-engine, turbofan-powered transport. Each engine will be capable of delivering 43,100 pounds of thrust. The flight controls are unchanged beyond those changes deemed necessary to accommodate the stretched configuration. The airplane has a seating capacity of up to 289, and a maximum takeoff weight of 270,000 pounds (122,470 Kg).

Type Certification Basis

Under the provisions of Title 14 CFR 21.101, Boeing must show that the Model 757–300 meets the applicable provisions of the regulations incorporated by reference in Type Certificate No. A2NM, or the applicable regulations in effect on the date of application for the change to the Model 757–300. The regulations incorporated by reference in the type certificate are commonly referred to as the ''original type certification basis.'' The regulations incorporated by reference in Type Certificate No. A2NM include 14 CFR part 25, as amended by Amendments 25–1 through 25–45, and certain other later amended sections of part 25 that are not relevant to these proposed special conditions. Except for certain earlier amended sections of part 25 that are not relevant to these proposed special conditions, Boeing has chosen to comply with part 25 as amended by Amendments 25–1 through 25–85, the applicable regulations in effect on the date of application. In addition to the applicable airworthiness regulations and special conditions, the 757–300 must comply with the fuel vent and exhaust emission requirements of part 34, effective September 10, 1990, plus any amendments in effect at the time of certification; and the noise certification requirements of part 36, effective December 1, 1969, as amended by Amendment 36–1 through the amendment in effect at the time of certification. The special conditions that may be developed as a result of this notice will form an additional part of the type certification basis.

If the Administrator finds that the applicable airworthiness regulations (i.e., part 25, as amended) do not contain adequate or appropriate safety standards for the 757–300 because of a novel or unusual design feature, special conditions are prescribed under the provisions of § 21.16 to establish a level of safety equivalent to that established in the regulations.

Special conditions, as appropriate, are issued in accordance with § 11.49 of the FAR after public notice, as required by §§ 11.28 and 11.29(b), and become part of the type certification basis in accordance with § 21.101(b)(2).

Special conditions are initially applicable to the model for which they are issued. Should the type certificate for that model be amended later to include any other model that incorporates the same novel or unusual design feature, or should any other model already included on the same type certificate be modified to incorporate the same novel or unusual design feature, the special conditions would also apply to the other model under the provisions of § 21.101(a)(1).

Novel or Unusual Design Features

The 757–300 airplane avionics enhancement will utilize electronic systems that perform critical functions, including the following airframe Line Replaceable Units (LRU): Multi-Mode Receiver (MMR), Flight Control Computer (FCC), Yaw Damper Stabilizer Trim Module (YSM), Air Data Inertial Reference System (ADIRS), and the Allied Signal Radio Altimeter (RA). These systems may be vulnerable to high-intensity radiated fields (HIRF) external to the airplane.

Discussion

There is no specific regulation that addresses protection requirements for electrical and electronic systems from HIRF. Increased power levels from ground based radio transmitters, and the growing use of sensitive electrical and electronic systems to command and control airplanes, have made it necessary to provide adequate protection.

To ensure that a level of safety is achieved equivalent to that intended by the regulations incorporated by reference, special conditions are needed for the 757–300, which require that new technology electrical and electronic systems, such as the MMR, FCC, YSM, ADIRS, and RA, be designed and installed to preclude component damage and interruption of function due to both the direct and indirect effects of HIRF.

High-Intensity Radiated Fields

With the trend toward increased power levels from ground based transmitters, plus the advent of space and satellite communications, coupled with electronic command and control of the airplane, the immunity of critical digital avionics systems to HIRF must be established.

It is not possible to precisely define the HIRF to which the airplane will be exposed in service. There is also uncertainty concerning the effectiveness of airframe shielding for HIRF. Furthermore, coupling of electromagnetic energy to cockpit-installed equipment through the cockpit window apertures is undefined. Based on surveys and analysis of existing HIRF emitters, an adequate level of protection exists when compliance with the HIRF protection special condition is shown with either paragraphs 1 or 2 below:

1. A minimum threat of 100 volts per meter peak electric field strength from 10 KHz to 18 GHz.

a. The threat must be applied to the system elements and their associated wiring harnesses without the benefit of airframe shielding.

b. Demonstration of this level of protection is established through system tests and analysis.

2. A threat external to the airframe of the following field strengths for the frequency ranges indicated.

Frequency	Field Strength (volts per meter)					
	US		UK/European		Consolidated	
	Peak	Avg.	Peak	Avg.	Peak	Avg.
10 kHz–100 kHz	30	30	50	50	50	50
100 kHz–500 kHz	40	30	60	60	60	60
500 kHz–2 MHz	30	30	70	70	70	70
2 MHz–30 MHz	190	190	200	200	200	200
30 MHz–70 MHz	20	20	30	30	30	30
70 MHz–100 MHz	20	20	30	30	30	30

Frequency	Field Strength (volts per meter)					
	US		UK/European		Consolidated	
	Peak	Avg.	Peak	Avg.	Peak	Avg.
100 MHz–200 MHz	30	30	150	30	150	30
200 MHz–400 MHz	30	30	70	70	70	70
400 MHz–700 MHz	80	80	700	40	700	80
700 MHz–1 GHz	690	240	1700	80	1700	240
1 GHz–2 GHz	970	70	5000	360	5000	360
2 GHz–4 GHz	1570	350	4500	360	4500	360
4 GHz–6 GHz	7200	300	5200	300	7200	300
6 GHz–8 GHz	130	80	2000	330	2000	330
8 GHz–12 GHz	2100	80	3500	270	3500	270
12 GHz–18 GHz	500	330	3500	180	3500	330
18 GHz–40 GHz	780	20	([1])	([1])	780	20

[1] NA.
The field strengths are expressed in terms of peak root-mean-square (rms) values.

The threat levels identified above differ from those used in previous special conditions and are the result of an FAA review of existing studies on the subject of HIRF, in light of the ongoing work of the Electromagnetic Effects Harmonization Working Group of the Aviation Rulemaking Advisory Committee. In general, these standards are less critical than the threat level that was previously used as the basis for earlier special conditions.

Applicability

As discussed above, these special conditions would be applicable initially to the 757–300 airplane. Should Boeing apply at a later date for a change to the type certificate to include another model incorporating the same novel or unusual design feature, the special conditions would apply to that model as well, under the provisions of § 21.101(a)(1).

Conclusion

This action affects certain design features only on the Model 757–300. It is not a rule of general applicability and affects only the manufacturer who applied to the FAA for approval of these features on this model.

List of Subjects in 14 CFR Part 25

Aircraft, Aviation safety, Reporting and record keeping requirements.

The authority citation for these proposed special conditions is as follows:

Authority: 49 U.S.C. 106(g), 40113, 44701, 44702, 44704.

The Proposed Special Conditions

Accordingly, the Federal Aviation Administration (FAA) proposes the following special conditions as part of the type certification basis for the Boeing 757–300 series airplanes.

1. *Protection from Unwanted Effects of High-Intensity Radiated Fields (HIRF).* Each electrical and electronic system that performs critical functions must be designed and installed to ensure that the operation and operational capability of these systems to perform critical functions are not adversely affected when the airplane is exposed to high-intensity radiated fields.

2. For the purpose of this special condition, the following definition applies:

Critical Functions. Functions whose failure would contribute to or cause a failure condition that would prevent the continued safe flight and landing of the airplane.

Issued in Renton, Washington, on March 17, 1998.

Donald L. Riggin,

Acting Manager, Transport Airplane Directorate, Aircraft Certification Service.

[FR Doc. 98–7826 Filed 3–24–98; 8:45 am]

BILLING CODE 4910–13–P

DEPARTMENT OF TRANSPORTATION

Federal Aviation Administration

14 CFR Part 39

[Docket No. 97–CE–100–AD]

RIN 2120–AA64

Airworthiness Directives; British Aerospace Jetstream Model 3101 Airplanes

AGENCY: Federal Aviation Administration, DOT.

ACTION: Notice of proposed rulemaking (NPRM).

SUMMARY: This document proposes to adopt a new airworthiness directive (AD) that would apply to all British Aerospace (BAe) Jetstream Model 3101 airplanes equipped with a certain autopilot. The proposed action would require modifying the autopilot elevator electric system relays by installing two additional relays and associated wiring changes in the relay box located under the right hand crew seat. The proposed AD is the result of mandatory continuing airworthiness information (MCAI) issued by the airworthiness authority for the United Kingdom. The actions specified by the proposed AD are intended to prevent failure of the autopilot elevator electric system relays for the up and down trim interlocks, which, if not corrected, could result in uncommanded trim servo operation and possible loss of control of the airplane.

DATES: Comments must be received on or before April 27, 1998.

ADDRESSES: Submit comments in triplicate to the Federal Aviation Administration (FAA), Central Region, Office of the Regional Counsel, Attention: Rules Docket No. 97–CE–100–AD, Room 1558, 601 E. 12th Street, Kansas City, Missouri 64106. Comments may be inspected at this location between 8 a.m. and 4 p.m., Monday through Friday, holidays excepted.

Service information that applies to the proposed AD may be obtained from British Aerospace Regional Aircraft, Prestwick International Airport, Ayrshire, KA9 2RW, Scotland; telephone (01292) 479888; facsimile (01292) 479703. This information also may be examined at the Rules Docket at the address above.

FOR FURTHER INFORMATION CONTACT: Mr. S. M. Nagarajan, Aerospace Engineer, Small Airplane Directorate, Aircraft Certification Service, 1201 Walnut, suite 900, Kansas City, Missouri 64106.

SUPPLEMENTARY INFORMATION:

Comments Invited

Interested persons are invited to participate in the making of the

proposed rule by submitting such written data, views, or arguments as they may desire. Communications should identify the Rules Docket number and be submitted in triplicate to the address specified above. All communications received on or before the closing date for comments, specified above, will be considered before taking action on the proposed rule. The proposals contained in this notice may be changed in light of the comments received.

Comments are specifically invited on the overall regulatory, economic, environmental, and energy aspects of the proposed rule. All comments submitted will be available, both before and after the closing date for comments, in the Rules Docket for examination by interested persons. A report that summarizes each FAA-public contact concerned with the substance of this proposal will be filed in the Rules Docket.

Commenters wishing the FAA to acknowledge receipt of their comments submitted in response to this notice must submit a self-addressed, stamped postcard on which the following statement is made: ''Comments to Docket No. 97–CE–100–AD.'' The postcard will be date stamped and returned to the commenter.

Availability of NPRMs

Any person may obtain a copy of this NPRM by submitting a request to the FAA, Central Region, Office of the Regional Counsel, Attention: Rules Docket No. 97–CE–100–AD, Room 1558, 601 E. 12th Street, Kansas City, Missouri 64106.

Discussion

The Civil Airworthiness Authority (CAA), which is the airworthiness authority for the United Kingdom, notified the FAA that an unsafe condition may exist on all BAe Jetstream Model 3101 airplanes equipped with an autopilot system installed under Jetstream Aircraft Limited (JAL) Modifications JM3027, 3243, 3352, or 3483. These modifications encompassed the installation of an autopilot system that had pitch-up and pitch-down relays with an 800 hour life limit. The CAA reports that the cause of the failure of the trip relays is due to the relay contacts opening and closing several times when the coil is de-energized rather than breaking cleanly in one operation. This results in premature failure of the relay contacts.

These conditions, if not corrected, could result in uncommanded trim servo operation and possible loss of control of the airplane.

Relevant Service Information

BAe has issued Jetstream 3100/3200 Series Service Bulletin 22–JK 2628, Revision 2, dated October 21, 1996, which specifies procedures for modifying the autopilot trim relays (which removes the 800 hour life cycle restriction on the pitch up and pitch down relays) by incorporating Kit No. JK2628, which provides two additional relays in the relay box located below the right hand crew seat in the cockpit.

The CAA classified this service bulletin as mandatory and issued British AD No. 006–10–96, undated, in order to assure the continued airworthiness of these airplanes in the United Kingdom.

The FAA's Determination

This airplane model is manufactured in the United Kingdom and is type certificated for operation in the United States under the provisions of § 21.29 of the Federal Aviation Regulations (14 CFR 21.29) and the applicable bilateral airworthiness agreement. Pursuant to this bilateral airworthiness agreement, the CAA has kept the FAA informed of the situation described above.

The FAA has examined the findings of the CAA, reviewed all available information including the service information referenced above, and determined that AD action is necessary for products of this type design that are certificated for operation in the United States.

Explanation of the Provisions of the Proposed AD

Since an unsafe condition has been identified that is likely to exist or develop in other BAe Jetstream Model 3101 airplanes of the same type design that are registered in the United States, and are equipped with autopilot systems installed under JAL Modifications JM3027, 3243, 3352, or 3483, the FAA is proposing AD action. The proposed AD would require modifying the autopilot system by installing two additional relays and associated wiring changes in the relay box located below the right-hand crew seat in the cockpit. Accomplishment of the proposed installation would be in accordance with Jetstream Series 3100/3200 Service Bulletin 22–JK 2628, Revision 2: October 21, 1996.

Proposed Compliance Time

The compliance time of this AD is presented in calendar time instead of hours time-in-service (TIS). The FAA has determined that a calendar time compliance is the most desirable method because the unsafe condition described by this AD occurs regardless of the hours time-in-service. The electrical failure in the relay contacts occurs from frequent use whether or not the airplane is actually in flight. Therefore, to ensure that the above-referenced condition is corrected on all of the affected airplanes within a reasonable period of time without inadvertently grounding any airplanes, a compliance schedule based upon calendar time instead of hours TIS is proposed.

Cost Impact

The FAA estimates that 189 airplanes in the U.S. registry would be affected by the proposed AD, that it would take approximately 6 workhours per airplane to accomplish the proposed action, and that the average labor rate is approximately $60 an hour. Parts cost approximately $430 per airplane. Based on these figures, the total cost impact of the proposed AD on U.S. operators is estimated to be $149,310 or $790 per airplane.

Regulatory Impact

The regulations proposed herein would not have substantial direct effects on the States, on the relationship between the national government and the States, or on the distribution of power and responsibilities among the various levels of government. Therefore, in accordance with Executive Order 12612, it is determined that this proposal would not have sufficient federalism implications to warrant the preparation of a Federalism Assessment.

For the reasons discussed above, I certify that this action (1) is not a ''significant regulatory action'' under Executive Order 12866; (2) is not a ''significant rule'' under DOT Regulatory Policies and Procedures (44 FR 11034, February 26, 1979); and (3) if promulgated, will not have a significant economic impact, positive or negative, on a substantial number of small entities under the criteria of the Regulatory Flexibility Act. A copy of the draft regulatory evaluation prepared for this action has been placed in the Rules Docket. A copy of it may be obtained by contacting the Rules Docket at the location provided under the caption **ADDRESSES**.

List of Subjects in 14 CFR Part 39

Air transportation, Aircraft, Aviation safety, Safety.

The Proposed Amendment

Accordingly, pursuant to the authority delegated to me by the Administrator, the Federal Aviation

Administration proposes to amend part 39 of the Federal Aviation Regulations (14 CFR part 39) as follows:

PART 39—AIRWORTHINESS DIRECTIVES

1. The authority citation for part 39 continues to read as follows:

Authority: 49 U.S.C. 106(g), 40113, 44701.

§ 39.13 [Amended]

2. Section 39.13 is amended by adding a new airworthiness directive (AD) to read as follows:

British Aerospace: Docket No. 97–CE–100–AD.

Applicability: Jetstream Model 3101 airplanes (all serial numbers), certificated in any category, that are equipped with autopilot systems installed under Jetstream Aircraft Limited (JAL) Modifications JM3027, 3243, 3352, or 3483.

Note 1: This AD applies to each airplane identified in the preceding applicability provision, regardless of whether it has been modified, altered, or repaired in the area subject to the requirements of this AD. For airplanes that have been modified, altered, or repaired so that the performance of the requirements of this AD is affected, the owner/operator must request approval for an alternative method of compliance in accordance with paragraph (c) of this AD. The request should include an assessment of the effect of the modification, alteration, or repair on the unsafe condition addressed by this AD; and, if the unsafe condition has not been eliminated, the request should include specific proposed actions to address it.

Compliance: Required within the next 12 calendar months after the effective date of this AD, unless already accomplished.

To prevent failure of the autopilot elevator electric system relays for the up and down trim interlocks, which if not corrected, could result in uncommanded trim servo operation and possible loss of control of the airplane, accomplish the following:

(a) Modify the autopilot system with Jetstream Aircraft Ltd. (JAL) Kit No. JK2628 in accordance with Jetstream 3100/3200 Series Service Bulletin No. 22–JK 2628, Revision 2: October 21, 1996, by installing two additional relays in the relay box with associated wiring changes. This relay box is located under the right-hand crew seat in the cockpit.

(b) Special flight permits may be issued in accordance with sections 21.197 and 21.199 of the Federal Aviation Regulations (14 CFR 21.197 and 21.199) to operate the airplane to a location where the requirements of this AD can be accomplished.

(c) An alternative method of compliance or adjustment of the compliance time that provides an equivalent level of safety may be approved by the Manager, Small Airplane Directorate, Aircraft Certification Service, 1201 Walnut, suite 900, Kansas City, Missouri 64106. The request shall be forwarded through an appropriate FAA Maintenance Inspector, who may add comments and then send it to the Manager, Small Airplane Directorate.

Note 2: Information concerning the existence of approved alternative methods of compliance with this AD, if any, may be obtained from the Small Airplane Directorate.

(d) Questions or technical information related to Jetstream 3100/3200 Series Service Bulletin No. 22–JK 2628, Revision 2: October 21, 1996 should be directed to British Aerospace Regional Aircraft, Prestwick International Airport, Ayrshire, KA9 2RW, Scotland; telephone (01292) 479888; facsimile (01292) 479703. This service information may be examined at the FAA, Central Region, Office of the Regional Counsel, Room 1558, 601 E. 12th Street, Kansas City, Missouri 64106.

Note 3: The subject of this AD is addressed in the British AD No. 006–10–96, undated.

Issued in Kansas City, Missouri, on March 17, 1998.

Michael Gallagher,

Manager, Small Airplane Directorate, Aircraft Certification Service.

[FR Doc. 98–7676 Filed 3–24–98; 8:45 am]

BILLING CODE 4910–13–P

DEPARTMENT OF TRANSPORTATION

Federal Aviation Administration

14 CFR Part 39

[Docket No. 97–CE–09–AD]

RIN 2120–AA64

Airworthiness Directives; Pilatus Aircraft Ltd. PC–6, PC–6/A, PC–6/B, and PC–6/C Series Airplanes

AGENCY: Federal Aviation Administration, DOT.

ACTION: Notice of proposed rulemaking (NPRM).

SUMMARY: This document proposes to adopt a new airworthiness directive (AD) that would apply to certain Pilatus Aircraft Ltd. (Pilatus) PC–6, PC–6/A, PC–6/B, and PC–6/C series airplanes equipped with turbo-prop engines. The proposed action would require modifying the fuel system to improve the venting between the collector tank, the main wing tanks, and the engine. The proposed AD is the result of mandatory continuing airworthiness information (MCAI) issued by the airworthiness authority for Switzerland. The actions specified by the proposed AD are intended to prevent engine fuel starvation during maximum climb and descent caused by poor fuel tank venting with low fuel levels, which, if not corrected, could result in a loss of engine power during critical phases of flight.

DATES: Comments must be received on or before April 27, 1998.

ADDRESSES: Submit comments in triplicate to the Federal Aviation Administration (FAA), Central Region, Office of the Regional Counsel, Attention: Rules Docket No. 97–CE–09–AD, Room 1558, 601 E. 12th Street, Kansas City, Missouri 64106. Comments may be inspected at this location between 8 a.m. and 4 p.m., Monday through Friday, holidays excepted.

Service information that applies to the proposed AD may be obtained from Pilatus Aircraft Ltd., Customer Liaison Manager, CH–6370 Stans, Switzerland; telephone: +41 41–6196 233; facsimile: +41 41–6103 351. This information also may be examined at the Rules Docket at the address above.

FOR FURTHER INFORMATION CONTACT: Mr. Roman T. Gabrys, Aerospace Engineer, FAA, Small Airplane Directorate, Airplane Certification Service, 1201 Walnut, suite 900, Kansas City, Missouri 64106; telephone (816) 426–6932; facsimile (816) 426–2169.

SUPPLEMENTARY INFORMATION:

Comments Invited

Interested persons are invited to participate in the making of the proposed rule by submitting such written data, views, or arguments as they may desire. Communications should identify the Rules Docket number and be submitted in triplicate to the address specified above. All communications received on or before the closing date for comments, specified above, will be considered before taking action on the proposed rule. The proposals contained in this notice may be changed in light of the comments received.

Comments are specifically invited on the overall regulatory, economic, environmental, and energy aspects of the proposed rule. All comments submitted will be available, both before and after the closing date for comments, in the Rules Docket for examination by interested persons. A report that summarizes each FAA-public contact concerned with the substance of this proposal will be filed in the Rules Docket.

Commenters wishing the FAA to acknowledge receipt of their comments submitted in response to this notice must submit a self-addressed, stamped postcard on which the following statement is made: ''Comments to Docket No. 97–CE–09–AD.'' The postcard will be date stamped and returned to the commenter.

Availability of NPRMs

Any person may obtain a copy of this NPRM by submitting a request to the

FAA, Central Region, Office of the Regional Counsel, Attention: Rules Docket No. 97–CE–09–AD, Room 1558, 601 E. 12th Street, Kansas City, Missouri 64106.

Discussion

The Federal Office for Civil Aviation (FOCA), which is the airworthiness authority for Switzerland, notified the FAA that an unsafe condition may exist on certain Pilatus PC–6, PC–6/A, PC–6/B, and PC–6/C series airplanes. The FOCA reports that there have been incidents of engines stopping during flight on these airplanes during parachute dropping and sky-diving missions. The investigation disclosed that the circumstances leading to the incidents were: frequently running at minimum fuel levels; making long and steep climbs and descents; and, making immediate landing and take-off turn-arounds with the engine running. Operating these airplanes in this manner may not allow the collector fuel tank to completely refill, especially if the fuel level is low. Under sustained, maximum achievable climb and descent altitudes, the low fuel level, combined with the current fuel venting system, allows air inclusion in the fuel lines.

These conditions, if not corrected, could result in engine fuel starvation and loss of engine power during critical phases of flight.

Relevant Service Information

Pilatus has issued Service Bulletin No. PC–6–SB–171, dated October 18, 1995, which specifies procedures for modifying the airplane fuel system, which improves the venting of the collector tank between the main wing tanks and the engine. This modification would assist in eliminating the possibility of air inclusion in the fuel lines while operating at maximum climb and descent altitudes. This service information also recommends inserting Airplane Flight Manual (AFM) Temporary Revision dated October 18, 1995, to remind the pilot to avoid repeated prolonged descents.

The FOCA classified this service bulletin as mandatory and issued Swiss AD HB 95–451, dated November 1, 1995, in order to assure the continued airworthiness of these airplanes in Switzerland.

The FAA's Determination

These airplane models are manufactured in Switzerland and are type certificated for operation in the United States under the provisions of § 21.29 of the Federal Aviation Regulations (14 CFR 21.29) and the applicable bilateral airworthiness agreement. Pursuant to this bilateral airworthiness agreement, the FOCA has kept the FAA informed of the situation described above.

The FAA has examined the findings of the FOCA, reviewed all available information, including the service information referenced above, and determined that AD action is necessary for products of this type design that are certificated for operation in the United States.

Explanation of the Provisions of the Proposed AD

Since an unsafe condition has been identified that is likely to exist or develop in other Pilatus PC–6, PC–6/A, PC–6/B, and PC–6/C series airplanes of the same type design registered in the United States, the FAA is proposing AD action. The proposed AD would require modifying the airplane's fuel venting system. Accomplishment of the proposed modification would be in accordance with Pilatus PC–6 Service Bulletin No. PC–6–SB–171, dated October 18, 1995.

Differences Between the Service Information, the FOCA AD, and the Proposed AD Action

The manufacturer recommends the modification of the fuel venting system and the insertion of a temporary revision to the AFM, and FOCA requires this temporary AFM insertion and modification for airplanes operated in Switzerland. The Swiss AD requires the AFM revision be accomplished prior to further flight and requires the revision to remain in the AFM until the venting modification is accomplished. The FOCA requires that the modification be accomplished within 90 days from receipt of the service bulletin.

The FAA does not propose to require insertion of the temporary AFM revision. The FAA proposes the modification of the fuel venting system and the calendar compliance time that is required by the Swiss AD.

Cost Impact

The FAA estimates that 29 airplanes in the U.S. registry would be affected by the proposed AD, that it would take approximately 10 workhours per airplane to accomplish the proposed action, and that the average labor rate is approximately $60 an hour. Parts cost approximately $614 per airplane. Based on these figures, the total cost impact of the proposed AD on U.S. operators is estimated to be $35,206 or $1,214 per airplane.

Regulatory Impact

The regulations proposed herein would not have substantial direct effects on the States, on the relationship between the national government and the States, or on the distribution of power and responsibilities among the various levels of government. Therefore, in accordance with Executive Order 12612, it is determined that this proposal would not have sufficient federalism implications to warrant the preparation of a Federalism Assessment.

For the reasons discussed above, I certify that this action (1) is not a ''significant regulatory action'' under Executive Order 12866; (2) is not a ''significant rule'' under DOT Regulatory Policies and Procedures (44 FR 11034, February 26, 1979); and (3) if promulgated, will not have a significant economic impact, positive or negative, on a substantial number of small entities under the criteria of the Regulatory Flexibility Act. A copy of the draft regulatory evaluation prepared for this action has been placed in the Rules Docket. A copy of it may be obtained by contacting the Rules Docket at the location provided under the caption **ADDRESSES**.

List of Subjects in 14 CFR Part 39

Air transportation, Aircraft, Aviation safety, Safety.

The Proposed Amendment

Accordingly, pursuant to the authority delegated to me by the Administrator, the Federal Aviation Administration proposes to amend part 39 of the Federal Aviation Regulations (14 CFR part 39) as follows:

PART 39—AIRWORTHINESS DIRECTIVES

1. The authority citation for part 39 continues to read as follows:

Authority: 49 U.S.C. 106(g), 40113, 44701.

§ 39.13 [Amended]

2. Section 39.13 is amended by adding a new airworthiness directive (AD) to read as follows:

Pilatus Aircraft Ltd.: Docket No. 97–CE–09–AD.

Applicability: Models PC–6, PC–6–H1, PC–6–H2, PC–6/350, PC–6/350–H1, PC–6/350–H2, PC–6/A, PC–6/A–H1, PC–6/A–H2, PC–6/B–H2, PC–6/B1–H2, PC–6/B2–H2, PC–6/B2–H4, PC–6/C–H2, and PC–6/C1–H2 airplanes (serial numbers 001 through 915), certificated in any category, that are equipped with turbo-prop engines.

Note 1: This AD applies to each airplane identified in the preceding applicability provision, regardless of whether it has been modified, altered, or repaired in the area subject to the requirements of this AD. For

airplanes that have been modified, altered, or repaired so that the performance of the requirements of this AD is affected, the owner/operator must request approval for an alternative method of compliance in accordance with paragraph (c) of this AD. The request should include an assessment of the effect of the modification, alteration, or repair on the unsafe condition addressed by this AD; and, if the unsafe condition has not been eliminated, the request should include specific proposed actions to address it.

Compliance: Required within the next 3 calendar months after the effective date of this AD, unless already accomplished.

To prevent engine fuel starvation during maximum climb and descent caused by poor fuel tank venting with low fuel levels, which, if not corrected, could result in a loss of engine power during critical phases of flight, accomplish the following:

(a) Modify the fuel venting system in accordance with the Accomplishment Instructions section in Pilatus PC–6 Service Bulletin No. PC–6–SB–171, dated October 18, 1995.

(b) Special flight permits may be issued in accordance with sections 21.197 and 21.199 of the Federal Aviation Regulations (14 CFR 21.197 and 21.199) to operate the airplane to a location where the requirements of this AD can be accomplished.

(c) An alternative method of compliance or adjustment of the compliance time that provides an equivalent level of safety may be approved by the Manager, Small Airplane Directorate, 1201 Walnut, suite 900, Kansas City, Missouri 64106. The request shall be forwarded through an appropriate FAA Maintenance Inspector, who may add comments and then send it to the Manager, Small Airplane Directorate.

Note 2: Information concerning the existence of approved alternative methods of compliance with this AD, if any, may be obtained from the Small Airplane Directorate.

(d) Questions or technical information related to Pilatus Service Bulletin No. PC–6–SB–171, dated October 18, 1995, should be directed to Pilatus Aircraft Ltd., Customer Liaison Manager, CH–6370 Stans, Switzerland; telephone: +41 41–6196 233; facsimile: +41 41–6103 351. This service information may be examined at the FAA, Central Region, Office of the Regional Counsel, Room 1558, 601 E. 12th Street, Kansas City, Missouri 64106.

Note 3: The subject of this AD is addressed in Swiss AD HB 95–451, dated November 1, 1995.

Issued in Kansas City, Missouri, on March 18, 1998.

Michael Gallagher,

Manager, Small Airplane Directorate, Aircraft Certification Service.

[FR Doc. 98–7672 Filed 3–24–98; 8:45 am]

BILLING CODE 4910–13–P

DEPARTMENT OF TRANSPORTATION

Federal Aviation Administration

14 CFR Part 71

[Airspace Docket No. 98–ACE–8]

Establishment of Class E Airspace; Atkinson, NE

AGENCY: Federal Aviation Administration (FAA), DOT.

ACTION: Notice of proposed rulemaking.

SUMMARY: This notice proposes to establish Class E airspace area at Stuart-Atkinson Municipal Airport, Atkinson, NE. The Federal Aviation Administration has developed Global Positioning System (GPS) Runway (RWY) 29 and VHF Omnidirectional Range/Distance Measuring Equipment (VOR/DME) RWY 29 Standard Instrument Approach Procedures (SIAPs) to serve Stuart-Atkinson Municipal Airport, Atkinson, NE. Controlled Class E airspace extending upward from 700 feet Above Ground Level (AGL) is needed to accommodate aircraft executing the SIAPs. This proposal would create controlled airspace at Stuart-Atkinson Municipal Airport. The intended effect of this rule is to provide controlled airspace for aircraft executing the SIAPs at the Stuart-Atkinson Municipal Airport.

DATES: Comments must be received on or before May 15, 1998.

ADDRESSES: Send comments on the proposal in triplicate to: Manager, Airspace Branch, ACE–520, Federal Aviation Administration, Docket No. 98–ACE–8, 601 East 12th Street, Kansas City, MO 64106.

The official docket may be examined in the Office of the Regional Counsel for the Central Region at the same address between 9:00 a.m. and 3:00 p.m., Monday through Friday, except Federal holidays.

An informal docket may also be examined during normal business hours in the office of the Manager, Airspace Branch, Air Traffic Division, at the address listed above.

FOR FURTHER INFORMATION CONTACT: Kathy Randolph, Air Traffic Division, Airspace Branch, ACE–520C, Federal Aviation Administration, 601 East 12th Street, Kansas City, Missouri 64106; telephone number: (816) 426–3408.

SUPPLEMENTARY INFORMATION:

Comments Invited

Interested parties are invited to participate in this proposed rulemaking by submitting such written data, views, or arguments as they may desire. Comments that provide the factual basis supporting the views and suggestions presented are particularly helpful in developing reasoned regulatory decisions on the proposal. Comments are specifically invited on the overall regulatory, economic, environmental, and energy-related aspects of the proposal. Communications should identify the airspace docket number and be submitted in triplicate to the address listed above. Commenters wishing the FAA to acknowledge receipt of their comments on this notice must submit with those comments a self-addressed, stamped postcard on which the following statement is made: ''Comments to Airspace Docket No. 98–ACE–8.'' The postcard will be date/time stamped and returned to the commenter. All communications received on or before the closing date for comments will be considered before taking action on the proposed rule. The proposal contained in this notice may be changed in light of comments received. All comments submitted will be available for examination in the Rules Docket both before and after the cosign date for comments. A report summarizing each substantive public contact with FAA personnel concerned with this rulemaking will be filed in the docket.

Availability of NPRMs

Any person may obtain a copy of this notice of Proposed Rulemaking (NPRM) by submitting a request to the Federal Aviation administration, Office of Public Affairs, Attention: Public Inquiry Center, APA–230, 800 Independence Avenue, SW, Washington, DC 20591, or by calling (202) 267–3484. Communications must identify the notice number of this NPRM. Persons interested in being placed on a dialing list for future NPRMs should also request a copy of Advisory Circular No. 11–2A, which describes the procedures.

The Proposal

The FAA is considering an amendment to 14 CFR part 71 to establish Class E airspace at Stuart-Atkinson Municipal Airport, Atkinson, NE. The FAA has developed GPS RWY 29 and VOR/DME RWY 29 SIAPs to serve the Stuart-Atkinson Municipal Airport, Atkinson, NE. Controlled Class E airspace extending upward from 700 feet AGL is needed to contain aircraft executing these SIAPs. The intended effect of this action is to provide segregation of aircraft operating under Instrument Flight Rules (IFR) from aircraft operating in visual weather conditions. The area would be depicted on appropriate aeronautical charts

thereby enabling pilots to circumnavigate the area or otherwise comply with IFR procedures. Class E airspace designations for airspace areas extending upward from 700 feet or more above the surface of the earth are published in paragraph 6005 of FAA Order 740.9E, dated September 10, 1997, and effective September 16, 1997, which is incorporated by reference in 14 CFR 71.1. The Class E airspace designation listed in this document would be published subsequently in the Order.

The FAA has determined that this proposed regulation only involves an established body of technical regulations for which frequent and routine amendments are necessary to keep them operationally current. Therefore, this proposed regulation (1) is not a ''significant regulatory action'' under Executive Order 12866; (2) is not a ''significant rule'' under DOT Regulatory Policies and Procedures (44 FR 11034; February 26, 1979); and (3) does not warrant preparation of a Regulatory Evaluation as the anticipated impact is so minimal. Since this is a routine matter that will only affect air traffic procedures and air navigation, it is certified that this proposed rule will not have a significant economic impact on a substantial number of small entities under the criteria of the Regulatory Flexibility Act.

List of Subjects in 14 CFR Part 71

Airspace, Incorporation by reference, Navigator (air).

The Proposed Amendment

Accordingly, pursuant to the authority delegated to me, the Federal Aviation Administration proposes to amend 14 CFR part 71 as follows:

PART 71—DESIGNATION OF CLASS A, CLASS B, CLASS C, CLASS D, AND CLASS E AIRSPACE AREAS; AIRWAYS; ROUTES; AND REPORTING POINTS

1. The authority citation for part 71 continues to read as follows:

Authority: 49 U.S.C. 106(g), 40103, 40113, 40120; E.O. 10854, 24 FR 9565, 3 CFR, 1959–1963 Comp., p. 389.

§ 71.1 [Amended]

2. The incorporation by reference in 14 CFR 71.1 of Federal Aviation Administration Order 7400.9E, Airspace Designations and Reporting Points, dated September 10, 1997, and effective September 16, 1997, is amended as follows:

Paragraph 6005 Class E airspace areas extending upward from 700 feet or more above the surface of the earth.

* * * * *

ACE NE E5 Atkinson, NE [New]

Stuart-Atkinson Municipal Airport, NE
(Lat. 42°33′45″ N., long. 99°02′16″ W.)

That airspace extending upward from 700 feet above the surface within a 6.5-mile radius of Stuart-Atkinson Municipal Airport, excluding that airspace within the O'Neill, NE, Class E airspace.

* * * * *

Issued in Kansas City, MO, on March 5, 1998.

Bryan H. Burleson,

Acting Manager, Air Traffic Division, Central Region.

[FR Doc. 98–7824 Filed 3–24–98; 8:45 am]

BILLING CODE 4910–13–M

DEPARTMENT OF TRANSPORTATION

Federal Aviation Administration

14 CFR Part 71

[Airspace Docket No. 98–ACE–14]

Proposed Amendment to Class E Airspace; Lawrence, KS; Perryville, MO; Warrensburg MO; Burlington, IA; Des Moines, IA; Fort Madison, IA; and Dubuque, IA

AGENCY: Federal Aviation Administration (FAA), DOT.

ACTION: Notice of proposed rulemaking.

SUMMARY: This notice proposes to amend the Class E airspace areas at, Lawrence, KS; Perryville, MO; Warrensburg, MO; Burlington, IA; Des Moines, IA; Fort Madison, IA and Dubuque, IA. A review of the Class E airspace designations for the airports listed above indicates they do not meet the criteria for 700 feet Above Ground Level (AGL) airspace required for diverse departures as specified in FAA Order 7400.2D. The areas are enlarged to conform to the criteria of FAA Order 7400.2D. The Airport Reference Points (ARP) for Perryville, MO, and Des Moines, IA, are amended. The Instrument Landing System (ILS) and coordinates have been added to the airspace designation for Des Moines, IA. The intended effect of this rule is to comply with the criteria of FAA Order 7400.2D, amend the appropriate ARPs, add the ILSs and coordinates, and provide additional controlled Class E airspace for aircraft operating under Instrument Flight Rules.

DATES: Comments must be received on or before June 1, 1998.

ADDRESSES: Send comments on the proposal in triplicate to: Manager, Airspace Branch, ACE–520, Federal Aviation Administration, Docket No. 98–ACE–14, 601 East 12th Street, Kansas City, MO 64106.

The official docket may be examined in the Office of the Regional Counsel for the Central Region at the same address between 9:00 a.m. and 3:00 p.m., Monday through Friday, except Federal holidays.

An-informal docket may also be-examined during normal business hours in the office of the Manager, Airspace Branch, Air Traffic Division, at the address listed above.

FOR FURTHER INFORMATION CONTACT: Kathy Randolph, Air Traffic Division, Airspace Branch, ACE–520C, Federal Aviation Administration, 601 East 12th Street, Kansas City, Missouri 64106; telephone number (816) 426–3408.

SUPPLEMENTARY INFORMATION:

Comments Invited

Interested panties are invited to participate in this proposed rulemaking by submitting such written data, views, or arguments as they may desire. Comments that provide the factual basis supporting the views and suggestions presented are particularly helpful in developing reasoned regulatory decisions on the proposal. Comments are specifically invited on the overall regulatory. economic, environmental, and energy-related aspects of the proposal. Communications should identify the airspace docket number and be submitted in triplicate to the address listed above. Comments wishing the FAA to acknowledge receipt of their comments on this notice must submit with those comments a self-addressed, stamped postcard on which the following statement is made: ''Comments to Airspace Docket No. 98–ACE–14'' The postcard will be date/time stamped and returned to the commenter. All communications received on or before the closing date for comments will be considered before taking action on the proposed rule. The proposal contained in this notice may be changed in light of comments received. All comments submitted will be available for examination in the Rules Docket both before and after the closing date for comments. A report summarizing each substantive public contact with FAA personnel concerned with this rulemaking will be filed in the docket.

Availability of NPRMs

Any person may obtain a copy of this Notice of Proposed Rulemaking (NPRM) by submitting a request to the Federal Aviation Administration, Office of

Public Affairs, Attention: Public Inquiry Center, APA–230, 800 Independence Avenue, SW, Washington, DC 20591, or by calling (202) 267–3484. Communications must identify the notice number of this NPRM. Person interested in being placed on a mailing list for future NPRMs should also request a copy of Advisory Circular No. 11–2A, which describes the procedures.

The Proposal

The FAA is considering an amendment to 14 CFR 71 to amend the Class E airspace areas at Lawrence Municipal Airport, KS; Perryville Municipal Airport, MO; Warrensburg Skyhaven Aiport, MO; Burlington Municipal Airport, IA; Des Moines International Airport, IA; Fort Madison Municipal Airport, IA; and Dubuque Regional Airport, IA. A review of the Class E airspace designations for these airports indicates they do not meet the criteria for 700 feet AGL airspace required for diverse departures as specified in FAA Order 7400.2D. The criteria in FAA Order 7400.2D for an aircraft to reach 1200 feet AGL, is based on a standard climb gradient of 200 feet per mile, plus the distance from the Airport Reference Point (ARP) to the end of the outermost runway. Any fractional part of a mile is converted to next higher tenth of a mile. The amendment of Class E airspace for the airports listed above will meet the criteria of FAA Order 7400.2D, amend the appropriate ARPs, add the ILS and coordinates, provide additional controlled airspace at and above 700 feet AGL, and thereby facilitate separation of aircraft operating under Instrument Flight Rules. The areas will be depicted on appropriate aeronautical charts. Class E airspace areas extending upward from 700 feet or more above the surface of the earth are published in paragraph 6005 of FAA Order 7400.9E, dated September 10, 1997, and effective September 16, 1997, which is incorporated by reference in 14 CFR 71.1. The Class E airspace designations listed in this document will be published subsequently in the Order.

The FAA has determined that this proposed regulation only involves an established body of technical regulations for which frequent and routine amendments are necessary to keep them operationally current. Therefore, this proposed regulation (1) is not a ''significant regulatory action'' under Executive Order 12866; (2) is not a ''significant rule'' under DOT Regulatory Policies and Procedures (44 FR 11034; February 26, 1979); and (3) does not warrant preparation of a Regulatory Evaluation as the anticipated impact is so minimal. Since this is a routine matter that will only affect air traffic procedures and air navigation, it is certified that this proposed rule will not have a significant economic impact on a substantial number of small entities under the criteria of the Regulatory Flexibility Act.

List of Subjects in 14 CFR Part 71

Airspace, Incorporation by reference, Navigation (air).

The Proposed Amendment

Accordingly, pursuant to the authority delegated to me, The Federal Aviation Administration proposes to amend part 71 of the Federal Regulations 14 CFR part 71 as follows:

PART 71—DESIGNATION OF CLASS A, CLASS B, CLASS C, CLASS D, AND CLASS E AIRSPACE AREAS; AIRWAYS; ROUTES; AND REPORTING POINTS

1. The authority citation for part 71 continues to read as follows:

Authority: 49 U.S.C. 106(g), 40103, 40113, 40120; E.O. 10854, 24 FR 9565, 3 CFR, 1959–1963 Comp., p. 389.

§ 71.1 [Amended]

2. The incorporation by reference in 14 CFR 71.1 of Federal Aviation Administration Order 7400.9E, Airspace Designations and Reporting Points, dated September 10, 1997, and effective September 16, 1997, is amended as follows:

Paragraph 6005 Class E airspace areas extending upward from 700 feet or more above the surface of the earth

* * * * *

ACE KS E5 Lawrence, KS [Revised]

Lawrence Municipal Airport, KS
(Lat. 39°00′40″ N., long. 95°13′00″ W.)
Lawrence NDB
(Lat. 39°00′25″ N., long. 95°13′17″ W.)

That airspace extending upward from 700 feet above the surface within a 6.5-mile radius of Lawrence Municipal Airport and within 2.6 miles each side of the 124° bearing from Lawrence NDB extending from the 6.5-mile radius to 7.9 miles southeast of the airport.

* * * * *

ACE MO E5 Perryville, MO [Revised]

Perryville Municipal Airport, MO
(Lat. 37°52′07″N., long. 89°51′44″ W.)
Farmington VORTAC, MO
(Lat. 37°40′24″ N., long. 90°14′03″ W.)

That airspace extending upward from 700 feet above the surface within a 6.6-mile radius of Perryville Municipal Airport and within 1.8 miles each side of the 057° radial of the Farmington VORTAC extending from the 6.6-mile radius to 8.2 miles southwest of the airport

* * * * *

ACE MO E5 Warrensburg, MO [Revised]

Warrensburg, Skyhaven Airport, MO
(Lat. 38°47′03″ N., long. 93°48′09″ W.)

That airspace extending upward from 700 feet above the surface within a 6.5-mile radius of Skyhaven Airport.

* * * * *

ACE IA E5 Burlington, IA [Revised]

Burlington Municipal Airport, IA
(Lat. 40°47′00″ N., long. 91°07′32″ W.)
Burlington VORTAC
(Lat. 40°43′24″ N., long. 90°55′33″ W.)

That airspace extending upward from 700 feet above the surface within a 6.8-mile radius of Burlington Municipal Airport and within 1.8 miles each side of the 293° radial of the Burlington VORTAC extending from the 6.8-mile radius to the Burlington VORTAC.

* * * * *

ACE IA E5 Des Moines, IA [Revised]

Des Moines International Airport, IA
(Lat. 41°32′06″ N., long. 93°39′38″ W.)
Newton VOR/DME
(Lat. 41°47′02″ N., long. 93°06′32″ W.)
CLIVE INT/OM
(Lat. 41°35′59″ N., long. 93°45′19″ W.)
FOREM LOM
(Lat. 41°28′56″ N., long 93°34′51″ W.)
Des Moines Regional Airport ILS
(Lat. 41°31′40″ N., long. 93°38′54″ W.)
Des Moines Regional Airport ILS
(Lat. 41°32′50″ N., long. 93°40′36″W.)

That airspace extending upward from 700 feet above the surface within a 6.9-mile radius of Des Moines International Airport and within 3 miles each side of the Des Moines International Airport ILS localizer NW course extending from the 6.9-mile radius area to 16 miles northwest of the CLIVE INT/OM and with 3 miles each side of the Des Moines International Airport ILS localizer SE course extending from the 6.9-mile radius to 16 miles southwest of the FOREM LOM and within 3 miles either side of the 239° radial of the Newton VOR/DME extending from the 6.9-mile radius to 18 miles northeast of the Des Moines International Airport.

* * * * *

ACE 81 E5 Fort Madison, IA

Fort Madison Municipal Airport, IA
(Lat. 40°39′33″ N., long. 91°19′37″ W.)

That airspace extending upward from 700 feet above the surface within a 6.4-mile radius of Fort Madison Municipal Airport and within 1.8 miles each side of the 078° bearing from the Fort Madison Municipal Airport extending from the 6.4-mile radius to 8.2 miles northeast of the airport.

ACE IA E5 Dubuque, IA [Revised]

Dubuque Regional Airport, IA
(Lat. 42°24′11″N., long. 90°42′33″ W.)
Dubuque VORTAC
(Lat. 42°24′05″ N., long. 90°42′33″ W.)

That airspace extending upward from 700 feet above the surface within a 6.7-mile

radius of Dubuque Regional Airport and within 2.6 miles each side of the 321° radial of the Dubuque VORTAC extending from the VORTAC to 7 miles northwest of the airport and within 3 miles each side of the 133° radial of the Dubuque VORTAC extending from the VORTAC to 13.5 miles southeast of the airport and with in 3 miles each side of the 189° radial of the Dubuque VORTAC extending from the VORTAC to 7.4 miles south of the airport.

* * * * *

Issued in Kansas City, MO, on March 5, 1998.

Bryan H. Burleson,

Acting Manager, Air Traffic Division, Central Regional.

[FR Doc. 98–7825 Filed 3–24–98; 8:45 am]

BILLING CODE 4910–13–M

DEPARTMENT OF HEALTH AND HUMAN SERVICES

Food and Drug Administration

21 CFR Part 101

[Docket Nos. 96P–0023 and 96P–0179]

Food Labeling; Serving Sizes; Reference Amounts for Candies; Extension of Comment Period

AGENCY: Food and Drug Administration, HHS.

ACTION: Proposed rule; extension of comment period.

SUMMARY: The Food and Drug Administration (FDA) is extending to May 26, 1998, the comment period for the proposal to amend the nutrition labeling regulations pertaining to reference amounts for certain candy products that published in the **Federal Register** of January 8, 1998 (63 FR 1078). The agency is taking this action in response to a request for an extension of the comment period. This extension is intended to provide interested persons with additional time to submit comments to FDA on its proposal.

DATES: Written comments by May 26, 1998.

ADDRESSES: Submit written comments to the Dockets Management Branch (HFA–305), Food and Drug Administration, 12420 Parklawn Dr., rm. 1–23, Rockville, MD 20857.

FOR FURTHER INFORMATION CONTACT: Lori A. LeGault, Center for Food Safety and Applied Nutrition (HFS–165), Food and Drug Administration, 200 C St. SW., Washington, DC 20204, 202–205–5269.

SUPPLEMENTARY INFORMATION: In the **Federal Register** of January 8, 1998 (63 FR 1078), FDA published a proposed rule to amend the nutrition labeling regulations to modify the product category ''Sugars and Sweets: Hard Candies, others'' by adding ''after-dinner mints, caramels, fondants (e.g., plain mints, candy corn), and liquid and powdered candies'' as kinds of products included under the category, and a reference amount customarily consumed per eating occasion (reference amount) of 15 milliliters (mL) for liquid candies; create a new product category under ''Sugars and Sweets,'' identified as ''Chocolate-covered fondants (e.g., chocolate-covered creams, chocolate-covered mints), taffy, and plain toffee,'' with a reference amount of 30 grams; and clarify what kinds of candies belong to the ''All other candies'' product category by expanding the category name to include specific examples. Interested persons were given until March 24, 1998, to submit comments on the proposal.

FDA has received a letter from two trade associations requesting that the agency grant a 60-day extension of the comment period on the proposed rule. The requests contend that additional time is needed to coordinate comments with numerous member companies. The agency acknowledges that the proposed rule is quite technical in nature and, after consideration, has decided to grant an extension of the comment period until May 26, 1998.

Interested persons may, on or before May 26, 1998, submit to the Dockets Management Branch (address above) written comments regarding this proposed rule. Two copies of any comments are to be submitted, except that individuals may submit one copy. Comments are to be identified with the docket number found in brackets in the heading of this document. Received comments may be seen in the office above between 9 a.m. and 4 p.m., Monday through Friday.

Dated: March 18, 1998.

William K. Hubbard,

Associate Commissioner for Policy Coordination.

[FR Doc. 98–7664 Filed 3–24–98; 8:45 am]

BILLING CODE 4160–01–F

DEPARTMENT OF HEALTH AND HUMAN SERVICES

Food and Drug Administration

21 CFR Parts 801, 803, 804, 806, 807, 810, 820, 821, 1002, and 1020

[Docket No. 97N–0447]

RIN 0910–ZA09

Medical Devices; Review and Revision of Compliance Policy Guides and Regulatory Requirements for Refurbishers, Rebuilders, Reconditioners, Servicers and ''As Is'' Remarketers of Medical Devices; Request for Comments and Information; Extension of Comment Period

AGENCY: Food and Drug Administration, HHS.

ACTION: Advance notice of proposed rulemaking; extension of comment period.

SUMMARY: The Food and Drug Administration (FDA) is extending to June 29, 1998, the comment period for the advance notice of proposed rulemaking (ANPRM) that appeared in the **Federal Register** of December 23, 1997 (62 FR 67011). This advance notice announced FDA's intention to review and, as needed, to revise compliance policy guides, amend regulatory requirements and, as appropriate, exercise alternative regulatory approaches regarding the remarketing of used medical devices. The agency is taking this action in response to two requests for extensions. This extension of comment period is intended to allow interested persons additional time to submit comments on the ANPRM.

DATES: Written comments by June 29, 1998.

ADDRESSES: Submit written comments to the Dockets Management Branch (HFA–305), Food and Drug Administration, 12420 Parklawn Dr., rm. 1–23, Rockville, MD 20857.

FOR FURTHER INFORMATION CONTACT: Casper E. Uldriks, Center for Devices and Radiological Health (HFZ–300), Food and Drug Administration, 2098 Gaither Rd., Rockville, MD 20850, 301–594–4692.

SUPPLEMENTARY INFORMATION: In the **Federal Register** of December 23, 1997 (62 FR 67011), FDA published an ANPRM announcing the agency's intention to review and, as needed, to revise compliance policy guides (CPG's), amend regulatory requirements and, as appropriate, exercise alternative regulatory approaches with respect to the remarketing of used medical

devices. This reexamination of device remarketing issues is being undertaken, in part, because of competing interests and equity concerns raised by manufacturers, device remarketers, and others, during the rulemaking process for the agency's Quality System (Q/S) regulation part 820 (21 CFR part 820). It provides a method of addressing whether, and to what degree, current good manufacturing practice requirements in the Q/S regulation should be applied by the agency to firms, other than manufacturers and remanufacturers, which process and/or remarket previously used devices outside the control of the device's original manufacturer.

The agency's reassessment is also being undertaken, in part, because of FDA's experience in implementing CPG's 7133.20 and 7124.28. These guides identify what statutory and regulatory requirements, which control the activities of manufacturers, are applicable to the activities of firms considered to be x-ray tube reloaders, or device reconditioners or rebuilders. Agency experience indicates that many firms are unaware of these compliance guides or their own compliance responsibilities, or use other terms to describe their activities. The reassessment is also warranted on the basis of FDA's knowledge of changes in industry practices in the remarketing of used devices.

As a consequence of the previous factors, and for purposes of discussion and public comment during the agency's reevaluation of device remarketing compliance issues, FDA is proposing to define the activities of device refurbishers, servicers, and ''as is'' remarketers on the basis that their various activities, in contrast to the activities of device remanufacturers defined in 21 CFR 820.3(w), do not significantly change a finished device's performance or safety specifications, or intended use(s). Having proposed to characterize such device processing and remarketing activities in this fashion, the agency is also considering alternative schemes or methods for applying certain regulatory controls to these activities on a voluntary or partial basis, or not at all. Comments, proposals for alternative regulatory schemes, and information were solicited by FDA from the public, the affected industry and other interested parties, in response to the ANPRM.

FDA received two requests to extend the comment period. One requested 30 additional days to focus resources on the referenced matter. The other requested an extension of 180 days so that issues may be discussed further at the multi-day conference of a device industry association, scheduled for September 1998.

FDA believes there is good cause to extend the comment period. However, FDA believes that a 180-extension period would unduly delay the process. Therefore, FDA is extending the comment period for 90 additional days.

Interested persons may, on or before June 29,1998, submit to the Dockets Management Branch (address above) written comments regarding the December 23, 1997, ANPRM described above. Two copies of any comments are to be submitted, except that individuals may submit one copy. Comments are to be identified with the docket number found in brackets in the heading of this document. Received comments may be seen in the office above between 9 a.m. and 4 p.m., Monday through Friday.

Dated: March 4, 1998.

D. B. Burlington,

Director, Center for Devices and Radiological Health.

[FR Doc. 98–7668 Filed 3–24–98; 8:45 am]

BILLING CODE 4160–01–F

DEPARTMENT OF THE TREASURY

Internal Revenue Service

26 CFR Part 1

[REG–209463–82]

RIN 1545–AV82

Required Distributions From Qualified Plans and Individual Retirement Plans; Correction

AGENCY: Internal Revenue Service, Treasury.

ACTION: Correction to notice of proposed rulemaking.

SUMMARY: This document contains corrections to REG–209463–82, which was published in the **Federal Register** on Tuesday, December 30, 1997 (62 FR 67780). The amendments to existing proposed regulations make changes to the rules that apply if a trust is named as a beneficiary of an employees benefit under a retirement plan.

FOR FURTHER INFORMATION CONTACT: Thomas Foley, (202) 622–6030 (not a toll-free number).

SUPPLEMENTARY INFORMATION:

Background

The notice of proposed rulemaking that is the subject of these corrections is under section 401(a)(9) of the Internal Revenue Code.

Need for Correction

As published, REG–209463–82 contains errors which may prove to be misleading and are in need of clarification.

Correction of Publication

Accordingly, the publication of the notice of proposed rulemaking (REG–209463–82), which is the subject of FR Doc. 97–33393, is corrected as follows:

§ 1.409(a)(9)–1 [Corrected]

1. On page 67783, § 1.409(a)(9)–1 is corrected as set out in the following table:

Section	Location	Incorrect language	Corrected language
.			
1.409(a)(9)–1	Q&A D–5, column 2, paragraph (a) of A, line 10.	''paragraph (b) of this D–5A are met,''.	''paragraph (b) of this D–5 are met,''
1.409(a)(9)–1	Q&A D–5, column 2, paragraph (a) of A., line 24.	''paragraph (b) of this D–5A are not met,''.	''paragraph (b) of this D–5 are not met,''
1.409(a)(9)–1	Q&A D–5, column 3, paragraph (c) of A., line 10 from the top of the column.	''5A are satisfied with respect to such''.	''5 are satisfied with respect to such''
1.409(a)(9)–1	Q&A D–6, column 3, paragraph (a) of A., line 3.	''requirements of paragraph (b) of D–5A''.	''requirements of paragraph (b) of D–5''
1.409(a)(9)–1	Q&A D–6, column 3, paragraph (a) of A., line 13 from the bottom of the paragraph.	''5A of this section are satisfied with''.	''5 of this section are satisfied with''
1.409(a)(9)–1	Q&A D–6, column 3, paragraph (a) of A., line 8 from the bottom of the paragraph.	''paragraph (b) of D–5A of this section are''.	''paragraph (b) of D–5 of this section are''

2. On page 67784, § 1.409(a)(9)–1 is corrected as set out in the following table:

Section	Location	Incorrect language	Corrected language
1.409(a)(9)–1	Q&A D–7, column 1, paragraph (a) of A., line 4.	''(b)(4) of D–5A of this section for''.	''(b)(4) of D–5 of this section for''
1.409(a)(9)–1	Q&A D–7, column 1, paragraph (a) introductory text of A., last line of the paragraph.	''(2) of this D–7A:''	''(2) of this D–7:''
1.409(a)(9)–1	Q&A D–7, column 1, paragraph (a)(2)(ii) of A., line 5.	''and (3) of D–5A of this section are''.	''and (3) of D–5 of this section are''
1.409(a)(9)–1	Q&A D–7, column 1, paragraph (b)(1) of A., second line from the bottom of the column.	''paragraph (b)(1), (2), and (3) of D–5A of''.	''paragraph (b)(1), (2) and (3) of D–5 of''
1.409(a)(9)–1	Q&A D–7, column 2, paragraph (c)(1) of A., line 6.	''(a)(1), (a)(2), or (b) of this D–7A, a plan''.	''(a)(1), (a)(2), or (b) of this D–7, a plan''
1.409(a)(9)–1	Q&A D–7, column 2, paragraph (c)(1) of A., line 10 from the bottom of the paragraph.	''requirements of paragraph (b) of D–5A''.	''requirements of paragraph (b) of D–5''

Cynthia E. Grigsby,
Chief, Regulations Unit, Assistant Chief Counsel (Corporate).

[FR Doc. 98–7671 Filed 3–24–98; 8:45 am]
BILLING CODE 4830–01–P

ENVIRONMENTAL PROTECTION AGENCY

40 CFR Part 70

[FRL–5985–5]

Operating Permits Program; Notice of Availability of Draft Rules

AGENCY: Environmental Protection Agency (EPA).

ACTION: Notice of Availability.

SUMMARY: The EPA is allowing public review and comment on the draft preamble and sections of the draft revisions to the operating permits regulations in 40 CFR part 70. The regulatory sections available for comment include those dealing with definitions, applicability, permit programs, permit applications, and permit content, among others, but do not include those associated with permit revisions or permit review by EPA, affected States, and the public. The draft revised sections being made available for review are the same as those contained in the May 14, 1997 draft preamble and regulatory revisions, which were announced as available for review in a June 3, 1997 **Federal Register** notice. The EPA is making these sections available for comment now so that any public comments may be considered before the close of stakeholder discussions. Draft revisions to the sections on permit revisions and permit review by EPA, affected States, and the public will be made available in the future.

DATES: Comments on the draft preamble and regulatory revisions must be received by April 24, 1998.

ADDRESSES: The draft preamble and regulatory revisions are available in EPA's Air Docket number A–93–50 as items VI–A–4 and VI–A–5, respectively. This docket is available for public inspection and copying between 8:30 a.m. and 3:30 p.m., Monday through Friday, at the address listed below. A reasonable fee may be charged for copying. The address of the EPA air docket is: EPA Air Docket (6102), Attention: Docket Number A–93–50, Room M–1500, Waterside Mall, 401 M Street SW, Washington, DC, 20460.

The drafts may also be downloaded from the Internet at: http://www.epa.gov/ttn/oarpg/t5pgm.html.

Comments on the materials referenced in today's notice must be mailed (in duplicate if possible) to: EPA Air Docket (6102), Attention: Docket No. A–93–50, at the above address. Please identify comments as concerning today's notice of availability of items VI–A–4 and VI–A–5.

FOR FURTHER INFORMATION CONTACT: Ray Vogel (telephone 919–541–3153) or Roger Powell (telephone 919–541–5331), Mail Drop 12, EPA, Information Transfer and Program Integration Division, Research Triangle Park, North Carolina, 27711. Internet addresses are: vogel.ray@epa.gov and powell.roger@epa.gov.

SUPPLEMENTARY INFORMATION: The part 70 operating permits regulations were originally promulgated on July 21, 1992 (57 FR 32250). Revisions to part 70 were proposed on August 29, 1994 (59 FR 44460) and August 31, 1995 (60 FR 45530). On May 13, 1997, the Agency released a draft of the final preamble and regulatory revision rulemaking that would revise part 70 for purposes of considering any final comments from interested parties before final action. The draft rulemaking reflected EPA's consideration of comments on the 1994 and 1995 proposals, and included additional regulatory changes that EPA believed appropriate based on comments. Availability of the May 13, 1997 draft and a 30-day public comment period was announced in a June 3, 1997 **Federal Register** notice (62 FR 30289).

Subsequently, after discussing the draft rulemaking with industry, environmental, and State/local permitting agency representatives (''stakeholders''), EPA decided that additional changes were necessary, particularly to the section on permit revision procedures. Consequently, EPA announced in a July 3, 1997 notice (62 FR 36039) that the public should withhold comment on the May 1997 draft until a new draft was prepared.

Since May 1997, EPA has discussed with stakeholders alternative approaches to the permit revision system contained in the May draft. While the discussions with stakeholders to date have involved the provisions of §§ 70.7 and 70.8, EPA also wants to discuss with the stakeholders any concerns with the remaining sections. To prepare for those discussions, it is important to be aware of concerns from the public at large on the remaining sections. Therefore, this notice announces availability of the remaining sections of part 70 for public review. The preamble and regulatory revisions related to §§ 70.7 and 70.8 will be made available in a future **Federal Register** notice of availability.

Items VI–A–4 and VI–A–5 in docket A–93–50 contain the portions of the preamble and regulations for the revisions that may be made to §§ 70.2 through 70.6 and §§ 70.9 through 70.11 of the part 70 regulations. That material is also available on the Internet at the address noted above. As in the June 3, 1997 notice, EPA seeks comment only on regulatory revisions that have changed since the August 1994 and

August 1995 proposals. The changes since the proposals are addressed in the preamble discussions on the relevant sections of part 70 (e.g. § 70.2).

Please send comments directly to Docket A–93–50 at the address previously provided and specify that they are in response to this document. Comments will be forwarded from the Air Docket to the Operating Permits Group of EPA.

Dated: March 17, 1998.

Richard D. Wilson,

Acting Assistant Administrator for Air and Radiation.

[FR Doc. 98–7765 Filed 3–24–98; 8:45 am]

BILLING CODE 6560–50–P

DEPARTMENT OF HEALTH AND HUMAN SERVICES

Office of Inspector General

42 CFR Parts 1003, 1005 and 1006

RIN 0991–AA90

Health Care Programs: Fraud and Abuse; Revised OIG Civil Money Penalties Resulting From the Health Insurance Portability and Accountability Act of 1996

AGENCY: Office of Inspector General (OIG), HHS.

ACTION: Notice of proposed rulemaing.

SUMMARY: This proposed rule would revise the OIG's civil money penalty (CMP) authorities, in conjunction with new and revised provisions set forth in the Health Insurance Portability and Accountability Act of 1996. Among other provisions, this proposed rulemaking would codify new CMPs for: Excluded individuals retaining ownership or control interest in an entity; upcoding and claims for medically unnecessary services; offering inducements to beneficiaries; and false certification of eligibility for home health services. This rule would also codify a number of technical and conforming changes consistent with the OIG's existing sanction authorities.

DATES: To assure consideration, public comments must be delivered to the address provided below by no later than 5 p.m. on May 26, 1998.

ADDRESSES: Pleas mail or deliver your written comments to the following address: Office of Inspector General, Department of Health and Human Services, Attention: OIG–25–P, Room 5527 Cohen Building, 330 Independence Avenue, S.W., Washington, D.C. 20201.

Because of staffing and resource limitations, we cannot accept comments by facsimile (FAX) transmission. In commenting, please refer to file code OIG–25–P.

Comments will be available for public inspection April 8, 1998 in Room 5524 of the Office of Inspector General at 330 Independence Avenue, S.W., Washington, D.C., on Monday through Friday of each week from 8 a.m. to 4:30 p.m., (202) 619–0089.

FOR FURTHER INFORMATION CONTACT: Joel Schaer, (202) 619–0089, OIG Regulations Officer.

SUPPLEMENTARY INFORMATION:

I. Background

A. Overview of the OIG Civil Money Penalty Authorities

In 1981, Congress enacted the civil money penalty (CMP) statute, section 1128A of the Social Security Act (the Act) (42 U.S.C. 1320a–7a), as one of several administrative remedies to combat increases in health care fraud and abuse. The CMP law authorized the Secretary and the inspector General to impose CMPs, assessment and program exclusions on individuals and entities whose wrongdoing caused injury to Department programs or their beneficiaries. The statutory penalty and assessment amounts under section 1128A generally provided for a penalty of no more than $2,000 for each item or service at issue, and an assessment in lieu of damages of not more than twice the amount claimed.

Since 1981, Congress has greatly expanded the CMP provisions to apply to numerous types of fraudulent and abusive activities related to Medicare and State health care programs. Specifically, new statutory provisions provided the Secretary and the OIG with the authority to sanction such improper practices as: (1) Hospitals paying physicians to reduce or limit services provided to program beneficiaries; (2) health maintenance organizations (HMOs) failing to provide medically necessary items and services; (3) individuals and entities engaging in certain misleading or fraudulent practices with respect to the marketing and selling of supplemental (Medigap) insurance policies; and (4) hospitals failing to examine and treat, or to properly transfer, emergency room patients (patient dumping).

In 1987, the Medicare and Medicaid Patient and Program Protection Act (MMPPPA), Public Law 100–93, was enacted to improve the ability of the Department ''to protect the Medicare and Medicaid programs from fraud and abuse, and to protect the beneficiaries of these programs from incompetent practitioners and from inappropriate and inadequate care.'' The MMPPPA significantly revised and expanded the OIG's CMP and exclusion sanction authorities. Final OIG regulations addressing amendments to out exclusion and CMP authorities resulting from Public Law 100–93 were published in the **Federal Register** on January 29, 1992 (57 FR 3298).

B. The Health Insurance Portability and Accountability Act of 1996

In the first significant amendments to the OIG's sanction authorities since MMPPPA, the Health Insurance Portability and Accountability Act (HIPAA) of 1996, Public Law 104–191, sets forth a number of important improvements to the OIG's authorities intended to curtail and eliminate health care fraud and abuse. With regard to the sanction authorities, HIPAA expanded the scope of certain basic fraud authorities by extending the application of current CMP provisions beyond those funded by the Department to include all Federal health care programs. The HIPAA also significantly revised and strengthened the OIG's existing CMP authorities pertaining to violations under Medicare and the State health care programs.

Among other provisions related to our CMP authority, HIPAA (1) increases the maximum penalty amounts per false claim from $2,000 to $10,000; (2) allows CMPs to be assessed for incorrect coding, medically unnecessary services, and persons offering remuneration to induce a program beneficiary to order from a particular provider or supplier receiving Medicare or State health care funds; and (3) establishes a new CMP for the false certification of eligibility for Medicare-covered home health services.

While the majority of these revisions to the OIG's CMP authorities under section 1128A of the Act are effective on January 1, 1997,[1] these provisions do allow the Department some policy discretion in their implementation. As a result, we are developing this proposed rulemaking to address these HIPAA penalty provisions, along with other technical revisions and conforming policy changes to the OIG's sanction authorities codified in 42 CFR parts 1003, 1005, and 1006.

[1] Section 232 of HIPAA applies to certifications made on or after August 21, 1996, the enactment date of the statute.

II. Provisions of the Proposed Rule

A. Extension of Current CMP Authority to All Federal Health Care Programs

Section 231(a) of HIPAA amended section 1128A of the Act to allow for the Federal government-wide application of CMPs for false claims to other health care programs, as defined in section 1128B(f) of the Act. Specifically, under section 231(a), the Medicare and State health care programs' CMP authorities for specified fraud and abuse violations, like the Medicare criminal statutes, will now apply to similar violations involving all Federal health care programs, such as CHAMPUS, Veterans, and the Public Health Service programs. (The Federal Employee Health Benefits Plan is expressly excluded from this definition of ''Federal health care program.'')

As a result, we would amend §§ 1003.100(b)(1)(i), 1003.102(a)(3), 1003.109(a), as well as the definitions for the terms *claim* and *exclusion* set forth in § 1003.101, to apply CMP coverage to all applicable Federal government health care programs. The definition for the term *program* currently set forth in § 1003.101 would also be deleted.

B. Increases in Civil Money Penalty Amounts

Prior to HIPAA, many of the CMP and assessment amounts authorized by section 1128A of the Act, and codified in § 1003.103 of the OIG regulations, remained consistent with the penalty and damage amounts contained in the False Claims Act (FCA) (31 U.S.C. 3729), and had not been revised since the 1986 amendments to that Act. Section 231(c) of HIPAA generally increases the amount of authorized CMPs from $2,000 to $10,000 per item or service improperly claimed or prohibited practice, and raises the authorized assessment amount from double to triple the amount claimed. This amendment to the OIG's authorized CMP amounts is consistent with the penalty and assessment amounts in the FCA which were increased by statute in 1986.

In accordance with section 231(c) of HIPAA, we are proposing to amend § 1003.103(a) to address the increased penalty amount, and § 1003.104 to address the revised assessment amount.

C. Clarification of the Knowledge Standard for Civil Money Penalties

The CMP statute was originally intended to provide an alternative administrative enforcement tool when injury to government programs and beneficiaries was not redressed through traditional civil or criminal remedies. Section 1128A of the Act and our implementing regulations have applied the ''knows or should know'' standard of proof for the Medicare and State health are programs' CMP provisions regarding false claims and other prohibited acts. The term ''should know'' has historically placed a duty on health care providers to use ''reasonable diligence'' to ensure that claims submitted to Medicare were true and accurate. The reason this standard was chosen was that the Medicare system relies heavily on the honesty and good faith of providers in submitting their claims. (The ''should know'' standard did not impose liability for honest mistakes; if the provider exercised reasonable diligence and still made a mistake, the provider was not liable.)

However, to make the knowledge standard consistent with the FCA, section 231(d) of HIPAA defined the term ''should know'' to mean ''reckless disregard'' or ''deliberate ignorance'' of the truth, with no proof of specific intent required. Under the newly defined ''should know'' standard in these proposed regulations, individuals and entities would only be liable if they act with deliberate ignorance or reckless disregard of information pertaining to the falsity of a claim or other fraud. No specific intent to defraud is required. The terms should know and should have known would be specifically defined in § 1003.101, with corresponding revisions made in §§ 1003.100(b)(1)(i) and 1003.102(a) and (b).

In addition, we are proposing to add a new paragraph (e) to § 1003.102, defining the term ''knowingly,'' to clarify congressional intent to apply the FCA standard of knowledge to the presentment of a claim under the CMP law.

D. New Civil Money Penalty for Excluded Individuals Retaining Ownership or Control Interest in a Participating Entity

Prior to HIPAA, if an individual retained a direct or indirect ownership or control interest in, or had a management role with, a health care entity that participates in Medicare or any State health care program after the individual had been excluded, the entity itself was at risk of exclusion under section 1128(b)(8) of the Act for as long as the individual maintained his or her relationship with that entity. However, the individual faced no additional liability unless he or she filed, or caused to be filed, a claim for reimbursement. This created a major loophole through which excluded individuals were often able, without penalty, to continue to reap the benefit of participation in Medicare and the State health care programs while excluded.

Section 231(b) of HIPAA specifically set forth new CMP authority designed to deter such affiliations by subjecting the excluded individual to a CMP of up to $10,000 for each day an excluded individual retained a prohibited relationship with a participating entity. This new CMP provision is to apply only to those with an ownership or control interest in a participating entity who know, or should know, of the action constituting the basis for the exclusion, or any excluded persons who retain positions as officers or managing employees of a participating entity. The imposition of the new CMP authority against an excluded individual will prevent excluded parties from continuing to benefit from government health care financing programs through indirect participation.

Under § 1003.102, Basis for civil money penalties and assessments, we propose to add a new paragraph (b)(11) to codify this new authority. Conforming revisions are also being proposed to § 1003.100, Basis and purpose, through the addition of a new paragraph (b)(1)(xi), and to § 1003.103, Amount of penalty, through the addition of a new paragraph (h). In addition, technical changes are being proposed to §§ 1003.105 and 1003.106.

E. New Civil Money Penalties for the Submission of Claims for Upcoding and for Medically Unnecessary Services

The OIG has historically viewed as unlawful under the statute (1) the claiming of an inappropriately elevated medical procedure code in order to obtain program reimbursement exceeding the amount allowed for the item or service rendered (upcoding); (2) a pattern of claiming reimbursement for services that an individual or entity knows, or should know, are not medically necessary; and (3) the routine waiver of Medicare part B copayments and deductibles. To clarify that these actions are unlawful practices, section 231(e) of HIPAA expressly rendered upcoding and the claiming of medically unnecessary services as violations of the CMP statute. (Section 231(h) of HIPAA further addressed the practice of routinely waiving deductible and coinsurance amounts, and is discussed below in section F.)

Section 231(e) of HIPAA establishes specific CMP authority for a pattern or practice of submitting claims, or causing claims to be submitted, based on a code that the person ''knows or should

know'' will result in greater payment than the code that should have been claimed.

To codify the upcoding prohibition, we would clarify § 1003.102(a)(1) of the regulations to indicate that the OIG may impose a penalty and assessment against any person it determines has presented or caused to be presented a claim for any item or service that the person knows, or should have known, was not provided as claimed, including any claim that is part of a pattern or practice of claims based on upcoding. A new § 1003.102(a)(6) would also be added to implement the OIG's authority to impose a CMP and assessment for any claim for an item or service that was medically unnecessary and part of a pattern or practice of such claims.

F. New Civil Money Penalty for the Offering of Inducements to Beneficiaries

Section 231(h) of HIPAA establishes a new CMP against individuals or entities that know, or should know, that offering remuneration or inducements to a program beneficiary will influence the patient's decision to order or receive any item or service from a particular provider, practitioner or supplier reimbursable under Medicare or the State health care programs. Remuneration includes both the waiver of all or part of the coinsurance and deductible amounts, and ''transfers of items and services for free or for other than fair market value.'' As a result, we are proposing to add a new § 1003.102(b)(12) to codify the new CMP authority for the offering of inducements to beneficiaries, with a conforming change also being made with the addition of a new § 1003.100(b)(1)(xii). In addition, new factors that take into account the degree of culpability and the amount of remuneration offered or transferred with respect to this authority are also being proposed for inclusion in new § 1003.106(a)(1)(i), (a)(1)(vii) and (b)(2)(iv).

This provision is a separate and distinct authority, completely independent of the Medicare and State health care program anti-kickback statute (42 U.S.C. 1320a–7b(b)). Specifically, the anti-kickback statute is an intent-based statute; that is, in order to provide a violation it is necessary to show specific intent to induce referrals or orders for services. Under this new CMP authority, individuals and entities risk imposition of CMPs if they offer remuneration under circumstances where they know or should know that it is likely to influence the selection of the health care provider or service.

For purposes of this provision, we wish to clarify that the offering of remuneration or inducements to program beneficiaries (other than increased coverage, reduced cost-sharing amounts and reduced premium amounts permitted by section 1876 of the Act) to enroll in a Medicare or Medicaid managed health care plan would violate this statutory provision, as such plans restrict beneficiaries to particular providers, practitioners or suppliers.

Statutory exceptions. There are three statutory exceptions to the definition of remuneration in this CMP provision. The first relates to waivers for coinsurance and deductibles that meet certain conditions, the second is for differentials in coinsurance and deductibles as part of a benefits plan design under certain conditions, and the third is for incentives given to individuals to promote the delivery of preventive care as determined by the Secretary. In accordance with section 231(h) of HIPAA, these three exceptions apply only to this CMP provision and have no application to the anti-kickback statute.

The first statutory exception relating to the waiver of coinsurance and deductible amounts exempts from this statutory provision waivers to indigent beneficiaries or after responsible collection efforts have failed.[2] The second exception relating to differentials in coinsurance and deductible amounts as part of a benefits plan design applies where (1) The differentials have been disclosed in writing to all beneficiaries, third-party payors and providers and (2) the differentials meet standards defined by the Secretary. We do not interpret the limited exception for differentials as authorizing any benefit plan design that directly or indirectly attempts to waive a beneficiary's obligation to pay deductible or coinsurance amounts under a Federal health care program. For example, a private insurance company's ''coordination of benefits'' provision does not operate to relieve a provider of its obligation to bill applicable coinsurance amounts to Medicare beneficiaries. Of course, a private insurer or employer may assume responsibility to pay such deductible or coinsurance amounts for its enrollees. At this time, we are choosing not to set forth in regulations a definition of differentials in coinsurance that are part of a plan design. Rather, we are seeking public comments on how best to define these standards in regulations for purposes of this provision.

The third exception from the statutory definition of remuneration under HIPAA protects *incentives* given to individuals to promote the delivery of preventive care. (However, the exception does not include the direct rendering of preventive medical care.) Specifically, the exception includes the provision of incentives to individuals who are eligible for benefits under a Federal health care program (as defined by section 1128B(f) of the Act) where such incentives are provided for the purpose of inducing individuals to obtain preventive care. The HIPAA requires the Secretary to identify what constitutes ''preventive care'' for purposes of this provision. Accordingly, we propose to define preventive care within the definition of remuneration at § 1003.101 to mean annual physicals and care associated with, and integral to, preventing the need for treatment or diagnosis of a specific illness, symptom, complaint or injury (including, but not limited to, prenatal and postnatal care, flu shots and immunizations for childhood diseases, AIDS and HIV testing, mammograms, pap smears and prostate cancer screenings, eye examinations, treatment for alcohol and drug addiction, and treatment designed to prevent domestic violence) where such care is provided or directly supervised by the medical provider that has provided the incentive.

Examples of incentives permitted under this provision would include, but would not be limited to, (1) Transportation to and from preventive care services; (2) car seats, baby formula and child safety devices provided for participating in prenatal or parenting classes; and (3) tee shirts, exercise videos and water bottles provided for participating in a post-cardiac care fitness program. Examples of impermissible incentives would include, but would not be limited to, items or services related to the promotion of general health and fitness (excluding an annual physical), such as health club memberships, nonprescription vitamins, nutritional supplements and beauty aids. Also, we believe incentives permitted under section 231(h) of HIPAA and these regulations would not include cash (or cash equivalents).

The conference report accompanying this new CMP made it clear that ''this provision (does) not preclude the provision of items and services of nominal value, including, for example,

[2] In the Balanced Budget Act of 1997, Pub. L. 105–33, a technical correction was made in section 4331(e)(1) to indicate that remuneration does not include a waiver of coinsurance and deductible amounts that are permissible under section 1128B(b)(3) of the Act or in regulations developed by the Secretary.

refreshments, medical literature, complimentary local transportation services, or participation in free health fairs.'' We are interpreting this statement to mean that the aggregate value of such services provided to any individual must be nominal. Hence, the frequent rendering of items and services to any individual may preclude such items and services as being classified as nominal in value.

G. New Civil Money Penalty for the False Certification of Eligibility for Home Health Services

Section 232 of HIPAA established a new CMP for false certification of eligibility to receive home health care. Specifically, under this provision if a physician falsely certifies the medical necessity for Medicare-covered home health services, *Knowing* that the care is not necessary, he or she may be subject to a CMP of the greater of $5,000 or 3 times the amount of the Medicare payments made for the home health care services. This provision applies to false certifications made on or after August 21, 1996. The new authority would be codified in proposed §§ 1003.100(b)(1)(xiii), 1003.102(b)(13) and 1003.103(g) of the regulations.

H. Other Conforming and Technical Regulatory Revisions

In addition to the changes to the OIG regulations at 42 CFR part 1003 designed to comply with the revised CMP sanction provisions required by HIPAA, we are proposing a number of technical changes in part 1003 to clarify and expand the applicability of existing regulations and procedures. In addition, with regard to the applicability of the appeals of exclusions, CMPs and assessments, limited changes are also being proposed in 42 CFR part 1005 with regard to motions to compel discovery and interlocutory appeals to the Departmental Appeals Board (DAB), and the scope of an administrative law judge's (ALJ) authority to issue subpoenas *duces tecum* is being clarified to include the authority to subpoena documents at or prior to the administrative hearing.

Section 1003.100, Basis and purpose—The current language in § 1003.100(b)(1)(viii) provides for the imposition of CMPs and, as applicable, assessments against persons who have ''submitted certain prohibited claims against the Medicare program.'' As a technical change, we propose to delete this language and redesignate the existing paragraphs accordingly, since many CMPs (including several new CMP authorities in HIPAA) do not involve the submission of claims as the prohibited conduct.

Section 1003.102, Basis for civil money penalties and assessments—We are proposing to delete the current regulatory language currently set forth in paragraphs (b)(2) and (b)(3) of this section, and reserve these paragraphs. The authority contained in § 1003.102(b)(2) addresses CMPs for non-participating physicians billing for actual charges in excess of the maximum allowable actual charge. The statutory freeze for actual charges exceeding the maximum allowed has expired, making this authority no longer valid. Section 1003.102(b)(3) addresses CMPs for billing for the services of an assistant at routine cataract surgery. As this authority has now been delegated to the Health Care Financing Administration, we are proposing to delete it from the OIG regulations. Conforming changes would also be made through the deletion of paragraphs (c) and (e) in § 1003.107.

Section 1003.103, Amount of penalty; and section 1003.105, Exclusion from participation in Medicare and State Health care programs—We are proposing to update the regulatory language currently set forth in §§ 1003.103(e) and 1003.105(a)(1), relating to patient anti-dumping provisions, consistent with the statutory amendments to the knowledge standard and penalty amounts.

Section 1003.106, Determinations regarding the amount of the penalty and assessment—We are proposing to broaden the language in paragraph (a)(1) of this section to include all existing and new CMP authorities. In addition, we would amend § 1003.106(b)(5), the factor addressing financial condition, by deleting the first sentence in this paragraph. The current language indicates that it should be considered a mitigating circumstance ''if the imposition of the penalty or assessment without reduction will jeopardize the ability of the respondent to continue as a *health care provider*;; (underling added). Since this penalty authority is intended to apply not only to direct providers of health care, but also to those involved in other related activities and positions (such as a transporter of patients or a CEO of a drug company), we believe this factor does not represent a generally applicable standards, and therefore propose deleting this factor.

Section 1003.107, Determinations regarding exclusions—We would amend paragraph (b) of this section to incorporate reference to the new CMP authorities being set forth in § 1003.102(b) (11) and (12) referenced above.

Section 1005.1. Definitions—While the terms ''OIG'' and ''Inspector General'' are defined, respectively, at the beginning of parts 1001 and 1003, part 1005 does not currently set forth such a definition. We would revise the definitions section of part 1005 to include a definition for the term ''Inspector General.''

Section 1005.7. Discovery—We are proposing a revision to § 1005.7(e) to provide for motions to compel discovery once a request for production of documents has been received. Presently, the language in paragraph (e) states that ''[A]fter a party has been served with a request for production of documents, that party may file for a protective order.'' However, there is no provision currently authorizing a motion to compel requested discovery. Thus, the burden is now on the person who wishes to withhold requested documents to file a motion, instead of upon the party who has requested the documents, and who can best explain their relevance. As in the Federal Rules of Civil Procedure, we believe that motions to compel discovery should be authorized by these administrative hearing regulations, so that the party requesting discovery will be responsible for invoking a judicial determination of a discovery dispute. The revision we propose would allow either party to object to discovery requests, and if a motion to compel is filed, a request for a protective order may be requested in response.

Specifically, we would revise § 1005.7(e) to make clear that a party has a right to object to discovery requests without requiring that party to file for a protective order, leaving it to the party seeking the documents to justify why access is appropriate in a motion to compel discovery. Any objections to production of documents would have to be filed with the opposing party within 15 days of receiving the discovery request. The party seeking the production of documents may then file a motion to compel discovery within the next 15 days or any other time frame set by the ALJ. We welcome comments on this clarifying change.

Section 1005.9. Subpoenas for attendance at hearing—We would revise paragraph (b) of § 1005.9 to clarify that this provision is intended to authorize an administrative law judge to issue a subpoena to any individual to attend the hearing and to provide documentary evidence at or prior to the hearing. The existing language in this section has been misconstrued in some instances as only authorizing the production of documents at the hearing. We are clarifying this language to

indicate that an ALJ may issue a subpoena *duces tecum* requiring documents to be produced before the hearing. We believe the proposed language should fully clarify the intent of this provisions.

Section 1005.15, The hearing and burden of proof—Section 1005.2(b) of the regulations defines a ''respondent'' as the party appealing a CMP, and a ''petitioner'' as the party appealing an exclusion. The existing language in paragraph (b) of § 1005.15, however, currently incorrectly uses the term ''respondent'' to refer to several exclusion authorities. We propose revising § 1005.15(b) to make the language in this paragraph consistent with the way parties are currently defined in § 1005.2(b).

Section 1005.21, Appeal to DAB—We would revise the current language in paragraph (d) of this section to allow for interlocutory appeals to the DAB in one limited situation; that is, on the timeliness of filing of the hearing request. Otherwise, in many cases a final ruling on the timeliness of a hearing request will be rendered meaningless because the hearing will take place before an appeal of an appeal of an ALJ's ruling on timeliness can occur.

Deletion of reference to the Office of the General Counsel in §§ 1003.126, 1003.128 and 1006.4—We would make a technical revision in §§ 1003.126, 1003.128(b) and 1006.4(b)(2) by deleting the current reference to ''the Office of the General Counsel.'' Section 1003.126 gives the Office of the General Counsel (OGC) the exclusive authority to settle a case prior to a final decision of the Secretary. Paragraph (b) of § 1003.128 authorizes the OGC ''after consultation with the IG'' to compromise any penalty and assessment imposed by the Secretary. Section 1006.4(b) addresses attendance at investigational inquiries. The current language indicates that both representatives of the OIG and the OGC may attend and ask questions. With the consolidation of the IG Division of Office of the General Counsel into the OIG, these references to the OGC are no longer appropriate, and the regulatory language should be revised to give the OIG exclusive authority to settle or compromise cases, and to attend investigational inquiries.

III. Regulatory Impact Statement

Executive Order 12866 and Regulatory Flexibility Act

The Office of Management and Budget (OMB) has reviewed this proposed rule in accordance with the provisions of Executive Order 12866 and the Regulatory Flexibility Act (5 U.S.C. 601–612), and has determined that it does not meet the criteria for a significant regulatory action. Executive Order 12866 directs agencies to assess all costs and benefits of available regulatory alternatives and, when rulemaking is necessary, to select regulatory approaches that maximize net benefits (including potential economic, environmental, public health, safety distributive and equity effects). In addition, under the Regulatory Flexibility Act, if a rule has a significant economic effect on a number of businesses the Secretary must specifically consider the economic effect of a rule on small business entities and analyze regulatory options that could lessen the impact of the rule.

As indicated above, the provisions contained in this proposed rulemaking are primarily intended to comply with amended statutory authority by (1) expanding the protection of certain basic fraud authorities beyond the Department to include other Federal health care programs, (2) strengthening current legal authorities pertaining to our imposition of CMPs against individuals and entities engaged in prohibited actions and activities, and (3) codifying other new and revised OIG sanction authorities set forth in Public Law 104–191.

We believe that these regulations will not have a significant ecomonic effect on Federal, State or local economies, nor will they have a significant economic effect on a substantial number of small entities. The CMP statute, as enacted by Congress in 1981, was an administrative remedy to combat increases in health care fraud. The CMP provisions have been expanded upon since their original enactment to counteract evolving fraudulent and abusive practices. These proposed regulations merely continue the approach of authorizing CMP sanctions against individuals and entities that abuse Federal and State health care programs as emerging fraudulent practices are identified. These remedial sanctions are addressed to a limited group of individuals and entities; that is, providers who abuse the Federal health care programs to the detriment of the beneficiaries and the public fisc.

The revised CMP provisions set forth in this proposed rule that address the upcoding of claims, and claims for medically unnecessary services, are essentially clarifications of existing OIG authorities. In addition, with respect to the new penalty authorities being codified, such as the CMP for excluded individuals retaining ownership or control interest in an entity and the CMP for the false certification of eligibility for home health services, these provisions target egregious conduct that is limited in scope and nature.

The proposed regulations would implement congressional intent in the area of fraud and abuse in health care programs. The regulations target areas of fraud, not industry; the scope of effect is narrow and targeted specifically to those individuals defrauding or abusing the Medicare and State health care programs. There should be no increase in paperwork or reporting burdens in any pre-existing programs as a result of these regulations.

Similarly, while increases in the authorized CMP amounts from $2,000 to $10,000 per false item or service claimed or prohibited practice may increase overall penalty amounts and recoveries, the process for deriving any settlement will remain essentially the same. While the rise in the amount of penalty from $2,000 to $10,000 is an increase, it is only proportionate to the amount of fraud against the public fisc. It also serves as a deterrent to health care fraud, consistent with congressional intent in the enactment of HIPAA. This penalty amount increase should not significantly affect the health case industry; the only effect is remedial against those who perpetrate fraud against the system and thus violate Federal and State law. This increased maximum amount per false claim or prohibited practice may, in certain circumstances, reduce OIG investigative costs since fewer individual false claims will need to be developed and proved in order for the Government to recover appropriate penalties and assessments. In addition, we believe settlements with individuals and entities may become more likely since the OIG's bargaining power is now enhanced in the face of greater potential financial exposure for the individual or entity.

Overall, we believe that any increase in CMP recoveries will not be significant since the vast majority of individuals, organizations and entities addressed by these regulations do not engage in such prohibited activities and practices. As indicated, these proposed regulations are narrow in scope and effect, serve to codify or revise existing OIG sanctions, comport with congressional and statutory intent, and strengthen the Department legal authorities against those who defraud or otherwise act improperly against the Federal and State health care program. Since there is no significant economic effect on the industry as a whole, there is little likelihood of effect on Federal or State expenditures to implement these

regulations. While some sanctions addressed in this rule may have a minor impact on small entities, it is the nature of the violation and not the size of the entity that will result in an action by the OIG. In conclusion, we believe that the aggregate economic impact of these regulations will be minimal, affecting only those limited few who have chosen to engage in prohibited arrangements, schemes and practices in violation of statutory intent. As a result, we have conducted, and the Secretary certifies, that this proposed rule should not have a significant economic impact on a substantial number of small entities that would require a regulatory flexibility analysis.

Paperwork Reduction Act

This proposed rule would impose no new reporting or recordkeeping requirements necessitating clearance by OMB.

List of Subjects

42 CFR Part 1003

Administrative practice and procedure, Fraud, Grant programs—health, Health facilities, Health professions, Maternal and child health, Medicaid, Medicare, Penalties.

42 CFR Part 1005

Administrative practice and procedure, Fraud, Penalties.

42 CFR Part 1006

Administrative practice and procedure, Fraud, Investigations, Penalties.

Accordingly, 42 CFR Parts 1003, 1005 and 1006 is proposed to be amended as set forth below:

PART 1003—[AMENDED]

A. Part 1003 would be amended as follows:

1. The authority citation for part 1003 would be revised to read as follows:

Authority: 42 U.S.C. 1302, 1320–7, 1320a–7a, 1320b–10, 1395dd(d)(1). 1395mm, 1395nn(g), 1395ss(d), 1396b(m), 11131(c) and 11137(b)(2).

2. Section 1003.100 would be revised to read as follows:

§ 1003.100 Basis and purpose.

(a) *Basis.* This part implements sections 1128(c), 1128A, 1140, 1876(i)(6), 1877(g), 1882(d) and 1903(m)(5) of the Social Security Act, and sections 421(c) and 427(b)(2) of Pub.L. 99–660 (42 U.S.C. 1320a–7, 1320a–7a,1320a–7(c), 1320b(10), 1395mm, 1395ss(d), 1396b(m), 11131(c) and 11137(b)(2)).

(b) *Purpose.* This part—

(1) Provides for the imposition of civil money penalties and, as applicable, assessments against persons who—

(i) Have knowingly submitted certain prohibited claims under Federal health care programs;

(ii) Seek payment in violation of the terms of an agreement or a limitation on charges or payments under the Medicare program, or a requirement not to charge in excess of the amount permitted under the Medicaid program;

(iii) Give false or misleading information that might affect the decision to discharge a Medicare patient from the hospital;

(iv) Fail to report information concerning medical malpractice payments or who improperly disclose, use or permit access to information reported under part B of title IV of Public Law 99–660, and regulations specified in 45 CFR part 60;

(v) Misuse certain Departmental and Medicare and Medicaid program words, letters symbols or emblems;

(vi) Violate a requirement of section 1867 of the Act § 489.24 of this title;

(vii) Substantially fail to provide an enrollee with required medically necessary items and services, or engage in certain marketing, enrollment, reporting, claims payment, employment or contracting abuses, or that do not meet the requirements for physician incentive plans for Medicare specified in §§ 417.479(d) through (f) of this title;

(viii) Present or cause to be presented a bill or claim for designated health services (as defined in § 411.351 of this title) that they know, or should know, were furnished in accordance with a referral prohibited under § 411.353 of this title;

(ix) Have collected amounts that they know or should know were billed in violation of § 422.353 of this title and have not refunded the amounts collected on a timely basis;

(x) Are physicians or entities that enter into an arrangement or scheme that they know or should know has as a principal purpose the assuring of referrals by the physician to a particular entity which, if made directly, would violate the provisions of § 411.353 of this title;

(xi) Are excluded, and who retain an ownership or control interest of five percent or more in an entity participating in Medicare or a State health care program, or who are officers or managing employees of such an entity (as defined in section 1126(b) of the Act);

(xii) Offer inducements to influence Medicare or State health care program beneficiaries to order or receive particular items or services; or

(xiii) Are physicians who knowingly misrepresent that a Medicare beneficiary requires home health services;

(2) Provides for the exclusion of persons from the Medicare or State health care programs against whom a civil money penalty or assessment has been imposed, and the basis for reinstatement of persons who have been excluded; and

(3) Sets forth the appeal rights of persons subject to a penalty, assessment and exclusion.

3. Section 1003.101 would be amended by republishing the introductory text; by revising the definition for the terms *Claim* and *Exclusion;* by removing the terms *General Counsel* and *Program;* and by adding, in alphabetical order, definitions for the terms *Remuneration* and *Should know*, or *should have known* to read as follows:

§ 1003.101 Definitions.

For purposes of this part:

* * * * *

Claim means an application for payment for an item or service to a Federal health care program (as defined in section 1128B(f) of the Act).

* * * * *

Exclusion means the temporary or permanent barring of a person from participation in a Federal health care program (as defined in section 1128B(f) of the Act).

* * * * *

Remuneration, as set forth in § 1003.102(b)(12), is consistent with the definition contained in section 1128A(i)(6) of the Act. For purposes of this definition of remuneration, preventive care means annual physicals and care associated with, and integral to, preventing the need for treatment or diagnosis of a specific illness, symptom, complaint or injury.

* * * * *

Should know or *should have known* means that a person, with respect to information—

(1) Acts in deliberate ignorance of the truth or falsity of the information; or

(2) Acts in reckless disregard of the truth or falsity of the information.

For purposes of this definition no proof of specific intent to defraud is required.

* * * * *

4. Section 1003.102 would be amended by revising the introductory text of paragraph (a) and paragraphs (a)(1) and (a)(3); republishing the introductory text of paragraph (a)(4) and revising paragraphs (a)(4)(iii) and paragraph (a)(5); adding a new

paragraph (a)(6); republishing the introductory text of paragraph (b) and revising introductory paragraph (b)(1); removing and reserving paragraphs (b)(2) and (b)(3); revising paragraphs (b)(4) and (b)(9); and by adding new paragraphs (b)(11) through (b)(13) and (e) to read as follows:

§ 1003.102 Basis for civil money penalties and assessments.

(a) The OIG may impose a penalty and assessment against any person whom it determines in accordance with this part has knowingly presented, or caused to be presented, a claim which is for—

(1) An item or service that the person knew, or should have known, was not provided as claimed, including a claim that is part of a pattern or practice of claims based on codes that the person knows or should know will result in greater payment to the person than the code applicable to the item or service actually provided;

* * * * *

(3) An item or service furnished during a period in which the person was excluded from participation in the Federal health care program to which the claim was made;

(4) A physician's services (or an item or service) for which the person knew, or should have known, that the individual who furnished (or supervised the furnishing of) the service—

* * * * *

(iii) Represented to the patient at the time the service was furnished that the physician was certified in a medical specialty board when he or she was not so certified;

(5) A payment that such person knows, or should know, may not be made under § 411.353 of this title; or

(6) An item or service that is medically unnecessary, and which is part of a pattern or practice of such claims.

(b) The OIG may impose a penalty, and where authorized, an assessment against any person (including an insurance company in the case of paragraphs (b)(5) and (b)(6) of this section) whom it determines in accordance with this part—

(1) Has knowingly presented or caused to be presented a request for payment in violation of the terms of—

* * * * *

(4) Has knowingly given or caused to be given to any person, in the case of inpatient hospital services subject to the provisions of section 1886 of the Act, information that he or she knew, or should have known, was false or misleading and that could reasonably have been expected to influence the decision when to discharge such person or another person from the hospital.

* * * * *

(9) Has not refunded on a timely basis, as defined in § 1003.101, amounts collected as the result of billing an individual, third party payer or other entity for a designated health service that was provided in accordance with a prohibited referral as described in § 411.353 of this title.

* * * * *

(11) Who is not an organization, agency or other entity, and who is excluded from participating in Medicare or a State health care program in accordance with sections 1128 or 1128A of the Act, and who—

(i) Knows or should know of the action constituting the basis for the exclusion, and retains a direct or indirect ownership or control interest of five percent or more in an entity that participates in Medicare or a State health care program; or

(ii) Is an officer or managing employee (as defined in section 1126(b) of the Act) of such entity.

(12) Offers or transfers remuneration (as defined in section 1128(i)(6) of the Act) to any individual eligible for benefits under Medicare or a State health care program, that such person knows or should know is likely to influence such individual to order or to receive from a particular provider, practitioner or supplier any item or service for which payment may be made, in whole or in part, under Medicare or a State health care program.

(13) Is a physician and who executes a document falsely by certifying that a Medicare beneficiary requires home health services when the physician knows that the beneficiary does not meet the eligibility requirements set forth in sections 1814(a)(2)(C) or 1835(a)(2)(A) of the Act.

* * * * *

(e) For purposes of this section, the term ''knowingly'' is defined consistent with the definition set forth in the Civil False Claims Act (31 U.S.C. 3729(b)).

5. Section 1003.103 would be amended by revising paragraphs (a) and (e); and by adding new paragraphs (g) and (h) to read as follows:

§ 1003.103 Amount of penalty.

(a) Except as provided in paragraphs (b) through (h) of this section, the OIG may impose a penalty of not more than—

(1) $2,000 for each wrongful act occurring before January 1, 1997 that is subject to a determination under § 1003.102; and

(2) $10,000 for each wrongful act occurring on or after January 1, 1997 that is subject to a determination under § 1003.102.

* * * * *

(e) For violations of section 1867 of the Act or § 489.24 of this title, the OIG may impose—

(1) Against each participating hospital with an emergency department, a penalty of not more than $50,000 for each negligent violation occurring on or after May 1, 1991, except that it the participating hospital has fewer than 100 State-licensed, Medicare-certified beds on the date the penalty is imposed, the penalty will not exceed $25,000; and

(2) Against each responsible physician, a penalty of not more than $50,000 for each negligent violation occurring on or after May 1, 1991.

* * * * *

(g) For violations of § 1003.102(b)(3) the OIG may impose a penalty of not more than the greater of—

(1) $5,000; or

(2) Three times the amount of Medicare payments for home health services that are made with regard to the false certification of eligibility by a physician in accordance with sections 1814(a)(2)(C) or 1835(a)(2)(A) of the Act.

(h) The OIG may impose a penalty of not more than $10,000 per day for each day that the prohibited relationship described in § 1003.102(b)(11) occurs. 6.

6. Section 1003.104 would be revised to read as follows:

§ 1003.104 Amount of assessment.

(a) The OIG may impose an assessment, where authorized, in accordance with § 1003.102, of not more than—

(1) Two times the amount for each item or service wrongfully claimed prior to January 1, 1997; and

(2) Three times the amount for each item or service wrongfully claimed on or after January 1, 1997.

(b) The assessment is in lieu of damages sustained by the Department or a State agency because of that claim.

7. Section 1003.105 would be amended by revising paragraph (a)(1); removing existing paragraph (b)(1); and by redesignating existing paragraphs (b)(2) and (b)(3) respectively as new paragraphs (b)(1) and (b)(2) to read as follows:

§ 1003.105 Exclusion from participation in Medicare and State health care programs.

(a)(1) Except as set forth in paragraph (b) of this section, the following persons may be subject, in lieu of or in addition to any penalty or assessment, to an exclusion from participation in Medicare for a period of time determined under § 1003.107. There will be exclusions from State health care

programs for the same period as the Medicare exclusion for any person who—

(i) Is subject to a penalty or assessment under § 1003.102(a), (b)(1), (b)(4), (b)(11) or (b)(12); or

(ii) Commits a gross and flagrant, or repeated, violation of section 1867 of the Act or § 489.24 of this title on or after May 1, 1991. For purposes of this section, a gross and flagrant violation is one that presents an imminent danger to the health, safety or well-being of the individual who seeks emergency examination and treatment or places that individual unnecessarily in a high-risk situation.

* * * * *

8. Section 1003.106 would be amended by revising paragraph (a)(1); republishing the introductory text of paragraph (b) and revising paragraphs (b)(2) and (b)(5); revising the introductory text of paragraph (c) and paragraph (c)(3); redesignating existing paragraphs (d) and (e) as new paragraphs (e) and (f); revising the introductory text of new redesignated paragraph (e); and by adding a new paragraph (d) to read as follows:

§ 1003.106 Determinaitons regarding the amount of the penalty and assessment.

(a) *Amount of penalty.* (1) In determining the amount of any penalty or assessment in accordance with § 1003.102(a), (b)(1), (b)(4) and (b)(9) through (b)(13), the Department will take into account—

(i) The nature of the claim, referral arrangement or other wrongdoing;

(ii) The degree of culpability of the person against whom a civil money penalty is proposed;

(iii) The history of prior offenses of the person against whom a civil money penalty is proposed;

(iv) The financial condition of the person against whom a civil money penalty is proposed;

(v) The completeness and timeliness of the refund with respect to § 1003.102(b)(9);

(vi) The amount of financial interest involved with respect to § 1003.102(b)(11);

(vii) The amount of remuneration offered or transferred with respect to § 1003.102(b)(12); and

(viii) Such other matters as justice may require.

* * * * *

(b) *Determining the amount of the penalty or assessment.* As guidelines for taking into account the factors listed in paragraph (a)(1) of this section, the following circumstances are to be considered—

* * * * *

(2) *Degree of culpability.* It should be considered a mitigating circumstance if the claim or request for payment for the item or service was the result of an unintentional and unrecognized error in the process the respondent followed in presenting claims or requesting payment, and corrective steps were taken promptly after the error was discovered. It should be considered an aggravating circumstance if—

(i) The respondent knew the item or service was not provided as claimed or if the respondent knew that the claim was false or fraudulent;

(ii) The respondent knew that the items or services were furnished during a period that he or she had been excluded from participation and that no payment could be made as specified in §§ 1003.102(a)(3) and 1003.102(b)(11), or because payment would violate the terms of an assignment or an agreement with a State agency or other agreement or limitation on payment under 1003.102(b);

(iii) The respondent knew that the information could reasonably be expected to influence the decision of when to discharge a patient from a hospital; or

(iv) The respondent knew that the offer or transfer or remuneration described in 1003.102(b)(12) would influence a beneficiary to order or receive particular items or services under Medicare or a State health care program.

* * * * *

(5) *Final condition.* In all cases, the resources available to the respondent will be considered when determining the amount of the penalty and assessment.

* * * * *

(c) In determining the amount of the penalty and assessment to be imposed for every item or service or incident subject to a determination under §§ 1003.102 (a), (b)(1) and (b)(4)—

* * * * *

(3) Unless there are extraordinary mitigating circumstances, the aggregate amount of the penalty and assessment should never be less than double the approximate amount of damages and costs (as defined in paragraph (f) of this section) sustained by the United States, or any State, as a result of claims or incidents subject to a determination under §§ 1003.102 (a), (b)(1) and (b)(4).

(d) In considering the factors listed in paragraph (a)(4) of this section for violations subject to a determination under § 1003.103(e), the following circumstances are to be considered, as appropriate, in determining the amount of any penalty—

(1) *Degree of culpability.* It would be a mitigating circumstance if the respondent hospital had appropriate policies and procedures in place, and had effectively trained all of its personnel in the requirements of section 1867 of the Act and § 489.24 of this title, but an employee or responsible physician acted contrary to the respondent hospital's policies and procedures.

(2) *Seriousness of individual's condition.* It would be an aggravating circumstance if the respondent's violation(s) occurred with regard to an individual who presented to the hospital a request for treatment of a medical condition that was clearly an emergency, as defined by § 489.24(b) of this title.

(3) *Prior offenses.* It would be an aggravating circumstance if there is evidence that at any time prior to the current violation(s) the respondent was found to have violated any provision of section 1867 of the Act or § 489.24 of this title.

(4) *Financial condition.* In all cases, the resources available to the respondent would be considered when determining the amount of the penalty. A respondent's audited financial statements, tax returns or financial disclosure statements, as appropriate, will be reviewed by OIG auditors to make a determination with respect to the respondent's financial condition.

(5) *Nature and circumstances of the incident.* It would be considered a mitigating circumstance if an individual presented a request for treatment, but subsequently exhibited conduct that demonstrated a clear intent to leave the respondent hospital voluntarily. In reviewing such circumstances, the OIG would evaluate the respondent's efforts to—

(i) Provide the services required by section 1867 of the Act and § 489.24 of this title, despite the individual's withdrawal of the request for examination or treatment; and

(ii) Document any attempts to inform the individual (or his or her representative) of the risks of leaving the respondent hospital without receiving an appropriate medical screening examination or treatment, and obtain informed consent from the individual (or his or her representative) prior to the individual's departure from the respondent hospital.

(6) *Other matters as justice may require.* (i) It would be considered a mitigating circumstance if the respondent hospital—

(A) Developed and implemented a corrective action plan;

(B) Took immediate appropriate action against any hospital personnel or responsible physician who violated section 1867 of the Act or § 489.24 of this title prior to any investigation of the respondent hospital by HCFA; or

(C) Is a rural or county-owned facility that is faced with severe physician staffing and financial deficiencies.

(ii) It would be considered an aggravating circumstance if an individual was severely harmed or died as a result of the respondent's violation of section 1867 of the Act or § 489.24 of this title.

(iii) Other circumstances of an aggravating or mitigating nature will be taken into account if, in the interests of justice, they require either a reduction of the penalty or an increase in order to assure the achievement of the purposes of this part.

(e) In considering the factors listed in paragraph (a)(5) of this section for violations subject to a determination under § 1003.103(f), the following circumstances are to be considered, as appropriate, in determining the amount of any penalty—

* * * * *

9. Section 1003.107 would be amended by revising paragraph (b); removing existing paragraph (c) and (e); redesignating paragraph (d) as new paragraph (c) and revising it to read as follows:

§ 1003.107 Determinations regarding exclusion.

* * * * *

(b) With respect to determinations to exclude a person under §§ 1003.102(a), (b)(1), (b)(4), (b)(11), or (b)(12), the Department considers those circumstances described in § 1003.106(b). Where there are aggravating circumstances with respect to such determinations, the person should be excluded.

(c) The guidelines set forth in this section are not binding. Nothing in this section limits the authority of the Department to settle any issue or case as provided by § 1003.126.

10. Section 1003.109 would be amended by revising the introductory text of paragraph (a) to read as follows:

§ 1003.109 Notice of proposed determination.

(a) If the Inspector General proposes a penalty and, when applicable, assessment, or proposes to exclude a respondent from participation in a Federal health care program, as applicable, in accordance with this part, he or she must deliver or send by certified mail, return receipt requested, to the respondent written notice of his or her intent to impose a penalty, assessment and exclusion, as applicable. The notice includes—

* * * * *

11. Section 1003.126 would be revised to read as follows:

§ 1003.216 Settlement.

The Inspector General has exclusive authority to settle any issues or case, without consent of the ALJ.

12. Section 1003.128 would be amended by revising paragraph (b) to read as follows:

§ 1003.128 Collection of penalty and assessment.

* * * * *

(b) A penalty or assessment imposed under this part may be compromised by the Inspector General, and may be recovered in a civil action brought in the United States district court for the district where the claim was presented, or where the respondent resides.

* * * * *

PART 1005—[AMENDED]

B. Part 1005 would be amended as follows:

1. The authority citation for part 1005 would continue to read as follows:

Authority: 42 U.S.C. 405(a), 405(b), 1302, 1320a–7, 1320a–7a and 1320c–5.

2. Section 1005.1 would be amended by adding, in alphabetical order; a definition for the term *Inspector General* to read as follows:

§ 1005.1 Definitions.

* * * * *

Inspector General (IG) means the Inspector General of the Department of Health and Human Services or his or her designees.

3. Section 1005.7 would be amended by revising paragraphs (e)(1) (e)(2) to read as follows:

§ 1005.7 Discovery.

* * * * *

(e)(1) When a request for production of documents has been received, within 15 days the party receiving that request will either fully respond to the request, or state that the request is being objected to and the reasons for that objection. If objection is made to part of an item or category, the part will be specified. Upon receiving any objections, the party seeking production may then, within 15 days or any other time frame set by the ALJ, file a motion for an order compelling discovery. (The party receiving a request for production may also file a motion for protective order any time prior to the date the production is due.)

(2) The ALJ may grant a motion for protective order or deny a motion for an order compelling discovery if the ALJ finds that the discovery sought—

(i) Is irrelevant;

(ii) Is unduly costly or burdensome;

(iii) Will unduly delay the proceeding; or

(iv) Seeks privileged information

* * * * *

4. Section 1005.9 would be amended by revising paragraph (b) to read as follows:

§ 1005.9 Subpoenas for attendance at hearing.

* * * * *

(b) A subpoena requiring the attendance of an individual in accordance with paragraph (a) of this section may also require the individual (whether or not the individual is a party) to produce evidence authorized under § 1005.7 at or prior to the hearing.

* * * * *

5. Section 1005.15 would be amended by revising the introductory text of paragraph (b) and paragraph (b)(1) to read as follows:

§ 1005.15 The hearing and burden of proof.

* * * * *

(b) With regard to the burden of proof in civil money penalty cases under part 1003 of this chapter, in Peer Review Organization exclusion cases under part 1004 of this chapter, and in exclusion cases under §§ 1001.701, 1001.901 and 1001.951 of this chapter—

(1) The respondent or petitioner, as applicable, bears the burden of going forward and the burden of persuasion with respect to affirmative defenses and any mitigating circumstances; and

* * * * *

6. Section 1005.21 would be amended by revising paragraph (d) to read as follows:

§ 1005.21 Appeal to DAB.

* * * * *

(d) There is no right to appear personally before the DAB or to appeal to the DAB any interlocutory ruling by the ALJ, except on the timeliness of a filing of the hearing request.

* * * * *

PART 1006—[AMENDED]

C. Part 1006 would be amended as follows:

1. The authority citation for part 1006 would continue to read as follows:

Authority: 42 U.S.C. 405(d), 405(e), 1302 and 1320a–7a.

2. Section 1006.4 would be amended by republishing the introductory text of

paragraph (b) and by revising paragraph (b)(2) to read as follows:

§ 1006.4 Procedures for investigational inquiries.

* * * * *

(b) Investigational inquiries are non-public investigatory proceedings. Attendance of non-witnesses is within the discretion of the OIG, except that—

* * * * *

(2) Representatives of the OIG are entitled to attend and ask questions.

* * * * *

Dated: August 21, 1997.

June Gibbs Brown,

Inspector General.

Approved: December 4, 1997.

Donna E. Shalala,

Secretary.

[FR Doc. 98–7506 Filed 3–24–98; 8:45 am]

BILLING CODE 4150–04–M

DEPARTMENT OF HEALTH AND HUMAN SERVICES

Administration for Children and Families

45 CFR Parts 302, 304 and 307

RIN 0970–AB70

Computerized Support Enforcement Systems

AGENCY: Office of Child Support Enforcement (OCSE), ACF, HHS.

ACTION: Notice of Proposed Rulemaking.

SUMMARY: These proposed regulations would implement provisions of the Personal Responsibility and Work Opportunity Reconciliation Act of 1996 (PRWORA), related to child support enforcement program automation. Under PRWORA, States must have in effect a statewide automated data processing and information retrieval system which by October 1, 1997, meets all the requirements of title IV–D of the Social Security Act enacted on or before the date of enactment of the Family Support Act of 1988, and by October 1, 2000, meets all the title IV–D requirements enacted under PRWORA. The law further provides that the October 1, 2000, deadline for systems enhancements will be delayed if HHS does not issue final regulations by August 22, 1998.

DATES: Consideration will be given to written comments received by May 11, 1998. We have reduced the standard 60-day comment period specified in E.O. 12866 to 45 days in recognition of the statutory deadline of August 22, 1998 for issuing final rules and the necessity of providing States with the required guidance as soon as practicable to facilitate their development or enhancement of systems.

ADDRESSES: Address comments to: Administration for Children and Families, Department of Health and Human Services, 370 L'Enfant Promenade, S.W., Washington D.C. 20447. Attention: Norman L. Thompson, Associate Deputy Director for Automation and Special Projects, Office of Child Support Enforcement.

Comments will be available for public inspection Monday through Friday, 8 a.m. to 4:30 p.m. on the fourth floor of the Department's offices at the address mentioned above.

FOR FURTHER INFORMATION CONTACT: Betsy Matheson at (202) 401–7386.

SUPPLEMENTARY INFORMATION:

Statutory Authority

These proposed regulations are published under the authority of several provisions of the Social Security Act, as amended by the Personal Responsibility and Work Opportunity Reconciliation Act of 1996. Sections 454(16), 454(24), 454A and 455(a)(3)(A) of the Act (42 U.S.C. 654(16), (24), 654A, and 655(a)(3)(A)), contain new requirements for automated data processing and information retrieval systems to carry out the State's IV–D State plan. Other sections, such as section 453 of the Act (42 U.S.C. 653) specify data that the system must furnish or impose safeguarding and disclosure requirements that the system must meet.

These proposed regulations are also published under the general authority of section 1102 (42 U.S.C. 1302) of the Act which requires the Secretary to publish regulations that may be necessary for the efficient administration of the provisions for which she is responsible under the Act.

Background

Full and complete automation is pivotal to improving the performance of the nation's child support program. With a current national caseload of 20 million, caseworkers are dependent on enhanced technology and increased automation to keep up with the massive volume of information and transactions critical to future success in providing support to children.

While most States have sought some level of child support program automation since the inception of the program, it wasn't until enactment of the Family Support Act of 1988 (Pub. L. 100–485), that program automation became a title IV–D State plan requirement. The Family Support Act required that States have in operation by October 1, 1995, a certified statewide system. (This date was subsequently extended to October 1, 1997, under Pub. L. 104–35).

These systems are to be statewide, operational, comprehensive, integrated, efficient, and effective. They are required to provide for case initiation; interface with other systems to obtain information to locate parents; aid in paternity establishment efforts by tracking, monitoring, and reporting on State efforts; monitor compliance with support orders and initiate enforcement action; update and maintain case records; process payments and distribute support; meet reporting requirements and address security and privacy issues.

Under PRWORA, States must build on this comprehensive automated foundation to implement the programmatic enhancements the law included for strengthening child support enforcement, including new enforcement tools and a shift in child support distribution requirements to a family-first policy. By October 1, 2000, States must have in place an automated statewide system that meets all the requirements and performs all the functions specified in PRWORA. This requirement recognizes that case processing changes and Federal and State legislative enhancements to State IV–D programs have little impact without proper automated support. The October 1, 2000 date is a completion date for the entire system, however certain requirements and functions must be met prior to that date. We have included those statutory effective dates in the regulations.

Accordingly, this rule proposes to set forth in regulations the framework for automation that State systems must have in place by the October 1, 2000, deadline. Our approach in developing these proposed rules was to adhere as closely as possible to the statute. We believe this approach is essential to ensuring that the proposed rules are well received, allowing the final regulation to be issued by the statutory deadline of August 22, 1998. The State deadline for completing these systems enhancements is delayed by one day for each day, if any, that we miss the statutory deadline for regulating. We believe this would be an unconscionable position—PRWORA compliant systems are intended to have a substantial impact on States' ability to protect the support rights of children, and it is essential that these changes are made without delay.

In addition, we believe the statute provides a proper and straight-forward

functional framework to support ACF's certification standards. These standards are outlined in a document entitled, ''Automated Systems for Child Support Enforcement: A Guide for States (the Guide).'' Concurrent with publishing these rules and in partnership with State child support agencies, we are updating the Guide to reflect the changes made by PRWORA. In particular, we are focusing on ways to measure system standards that support program outcomes most effectively.

The draft Guide will be disseminated to States and other interested parties for comment through an Action Transmittal (AT). After reviewing the comments received, we will issue an AT with final systems functional requirements.

We have, however, proposed several changes in these regulations to strengthen the process for approving and monitoring State activity under Advanced Planning Documents (APDs) by codifying and building on several existing practices and authorities relevant to systems oversight in regulation. We believe this is necessary to ensure that child support systems meet the critical needs of the program as envisioned under the Family Support Act of 1988 and the Personal Responsibility and Work Opportunity Reconciliation Act of 1996.

As is current practice, once ACF determines, through a certification review, that a Computerized Support Enforcement System (CSES) meets these standards throughout the State, the CSES is certified by ACF. Certification may be granted in two stages. The first stage, level 1 certification, is granted when a State system meets all functional requirements in 45 CFR 307.10, as specified in the Guide, and is installed and operational in a pilot or multiple pilot location and; level 2 certification is granted when statewide installation of the functionally comprehensive system is complete and the system is operational.

PRWORA Automation Enhancements

As indicated above, the Family Support Act laid the foundation for comprehensive automated systems. The PRWORA requirements build on this base to ensure these systems support the new tools and other programmatic enhancements the law included to strengthen child support enforcement.

PRWORA added a new section 454A to the Act to house all functional requirements that State systems must meet, both from the Family Support Act and from PRWORA. Those emanating from PRWORA include:

- Functional requirements specified by the Secretary related to management of the program (454A(b))
- Calculation of performance indicators (454A(c))
- Information integrity and security requirements (454A(d))
- Development of a State case registry (454A(e))
- Expanded information comparisons and other disclosures of information (454A(f)), including to the Federal case registry of child support orders and the Federal Parent Locator Service (FPLS) and with other agencies in the State, agencies of other States and interstate information networks, as necessary and appropriate.
- Collection and distribution of support payments (454A(g)), including facilitating the State's centralized collection and disbursement unit and modifications to meet the revised distribution requirements.
- Expedited Administrative Procedures (454A(h))

Each of these is discussed in greater detail in the section of this preamble entitled, Proposed Regulatory Changes.

To assist States in meeting these mandates for enhancement to their statewide automated systems, Congress provided an additional amount of Federal funding available at the 80 percent rate for the planning, design, development, installation or enhancement of statewide, automated systems. Section 344(b)(2) of PRWORA places a cap on the Federal share of funding available at 80 percent enhanced Federal Financial participation. This 80 percent funding is available to meet the automation requirements of the Family Support Act as well as the new automation requirements of PRWORA. PRWORA also revised section 455(a)(3) of the Act to restore 90 percent Federal funding for completing Family Support Act systems on a limited basis.

Proposed Regulatory Changes

State Plan Requirements (Part 302)

To implement the statutory changes, we first propose to revise the regulations at 45 CFR 302.85, ''Mandatory computerized support enforcement systems.'' Current 45 CFR 302.85(a) provides that if the State did not have in effect by October 13, 1988 a computerized support enforcement system that meets the requirements of § 307.10, the State must submit an Advanced Planning Document (APD) for such a system to the Secretary by October 1, 1991, and have an operational system in effect by October 1, 1995.

Section 454(24) of the Act, as amended by PRWORA, provides that the State must have in effect a computerized support enforcement system which by October 1, 1997 meets all IV–D requirements in effect as of the date of enactment (October 13, 1988) of the Family Support Act of 1988, including all IV–D requirements in PRWORA. In addition, the State must have a CSES which by October 1, 2000 meets all IV–D requirements in effect as of the date of enactment (August 22, 1996) of PRWORA, including all IV–D requirements in that Act.

Thus, the proposed § 302.85(a) of the regulations would reiterate the current statutory requirements for mandatory automated systems for support enforcement. Proposed § 302.85(a)(1) would include the requirement under existing paragraph (a) that the system be developed in accordance with §§ 307.5 and 307.10 of the regulations and the OCSE guidelines entitled ''Automated Systems for Child Support Enforcement: A Guide for States.'' In addition, the proposed § 302.85(a)(2) would require that, by October 1, 2000, a system meeting PRWORA requirements be developed in accordance with §§ 307.5 and 307.11 of the regulations and the OCSE guidelines referenced above.

Change in Federal Financial Participation (Part 304)

To make part 304 regulations consistent with the statute, we propose to amend 45 CFR 304.20, ''Availability and rate of Federal financial participation,'' at paragraph (c) to provide that FFP at the 90 percent rate for the planning, design, development, installation and enhancement of computerized support enforcement systems that meet the requirement of § 307.30(a) is only available until September 30, 1997. (See the discussion below regarding revised § 307.30(a).)

Computerized Support Enforcement Systems (Part 307)

We propose to amend 45 CFR part 307, Computerized support enforcement systems, throughout to conform part 307 to the changes required by sections 454, 454A, and 455(a) of the Act, as amended by PRWORA and the proposed revisions to 45 CFR 302.85, which were discussed earlier.

We propose to revise the title of § 307.10 to read ''Functional requirements for computerized support enforcement systems in operation by October 1, 1997'', and add titles for two new sections, ''§ 307.11 Functional requirements for computerized support enforcement systems in operation by October 1, 2000'' and ''§ 307.13 Security

and Confidentiality of computerized support enforcement systems in operation by October 1, 2000'', to reflect these changes.

We propose to revise § 307.0, ''Scope of this part'', to reflect the new requirements of sections 454, 454A, 455(a) of the Act, as amended, and section 344(a)(3) of PRWORA regarding statewide automated CSESs. This would be accomplished by referencing the new statutory language in the introductory section and by adding a new paragraph (c) which would refer to the security and confidentiality requirements for CSESs. Accordingly, current paragraphs (c) through (h) would be redesignated as paragraphs (d) through (i).

In § 307.1, ''Definitions'', we propose to add the definition of ''Business day'' as defined in the new section 454A(g)(2) of the Act. Accordingly, current paragraphs (b) through (j) would be redesignated as paragraphs (c) through (k). In addition, we propose in the redesignated paragraphs (d) and (g) to replace the citation ''§ 307.10'' with the citations ''§§ 307.10, or 307.11'' to reflect the regulatory changes proposed below.

Mandatory Computerized Support Enforcement Systems

We propose to amend 45 CFR 307.5, Mandatory computerized support enforcement systems, as follows:

Currently, paragraphs (a) and (b) are outdated and reflect deadlines mandated by the Family Support Act on APD submittal requirements and timeframes. To reflect the amended section 454(24) of the Act, we propose to eliminate paragraphs (a) and (b) in their entirety, to replace paragraph (a) and to renumber paragraphs (c) through (h) as (b) through (g).

We propose adding a paragraph (a)(1) to provide that each State must have in effect by October 1, 1997, an operational computerized support enforcement system which meets the requirements in 45 CFR 302.85(a)(1) related to the Family Support Act of 1988 requirements and to provide that OCSE will review the systems to certify that these requirements are met. Under paragraph (a)(2), we propose to require each State to have in effect, by October 1, 2000, an operational computerized support enforcement system which meets the requirements in 45 CFR 302.85(a)(2) related to PRWORA requirements and to provide that OCSE will review the systems to certify that these requirements are met.

In addition, under paragraph (d), the reference to ''§ 307.10'' would be replaced by ''§§ 307.10 or 307.11.''

Functional Requirements for Computerized Support Enforcement Systems

To reflect the statutory changes, the title of § 307.10 ''Functional requirements for computerized support enforcement systems.'' would be revised to read ''Functional requirements for computerized support enforcement systems in operation by October 1, 1997.'' to better reflect the content of the regulation. In the introductory language, the citation ''§ 302.85(a)'' would be replaced by the citation ''§ 302.85(a)(1)'' to reflect proposed changes made earlier in the regulations. The citation ''AFDC'' would be replaced by the citation ''TANF'' (Temporary Assistance for Needy Families) in paragraph (b)(10). Paragraph (b)(14) would be deleted because the requirement for electronic data exchange with the title IV–F program (Job Opportunities and Basic Skills Training Program) is no longer operative since under PRWORA States had to eliminate their IV–F programs by July 1, 1997. Current paragraphs (b)(15) and (16) would be redesignated as paragraphs (b)(14) and (15).

We propose to add a new regulation at 45 CFR 307.11, ''Functional requirements for computerized support enforcement systems in operation by October 1, 2000,'' which reiterates the new statutory requirements in sections 454(16) and 454A of the Act, as discussed below.

The introductory language of proposed § 307.11 would specify that each State's computerized support enforcement system established and operated under the title IV–D State plan at § 302.85(a)(2) must meet the requirements in this regulation. As proposed in paragraph (a), the CSES in operation by October 1, 2000 must be planned, designed, developed, installed or enhanced and operated in accordance with an initial and annually updated APD approved under § 307.15 of the regulations. If the State elects to enhance its existing CSES to meet PRWORA requirements, it has the option of submitting either a separate APD or combining the Family Support Act and PRWORA requirements in one APD update. If the State elects to develop a new CSES, a separate implementation APD must be submitted.

We propose in paragraph (b) that the CSES control, account for, and monitor all the factors in the support collection and paternity determination process under the State plan which, at a minimum, include the factors in the regulation. Under the proposed paragraph (b)(1), the system must control, account for, and monitor the activities in § 307.10(b) of the regulations which a CSES in operation by October 1, 1997, must meet, except those activities in paragraphs (b)(3), (8), and (11) of § 307.10. These reporting, financial accountability, and security activities are replaced by similar or expanded provisions discussed later in this preamble that reflect statutory changes from PRWORA.

We propose in paragraph (b)(2) to describe the tasks that the computerized support enforcement system must have the capacity to perform with the frequency and in the manner required under or by the regulations that implement title IV–D of the Act. Paragraph (b)(2)(i) requires the CSES to perform the functions discussed below and any other functions the Secretary of HHS may specify related to the management of the State IV–D program. We are not proposing to add additional management-related functional requirements other than those currently specified or provided in the statute.

Under the proposed paragraph (b)(2)(i)(A), the system must control and account for the use of Federal, State, and local funds in carrying out the State's IV–D program either directly or through an interface with State financial management and expenditure information systems. Some States currently meet this requirement by maintaining and accessing IV–D cost data on a State financial management and expenditure system. Since the statute does not specifically address meeting this requirement through an interface with a State financial management and expenditure information system, we propose to continue to allow the States to meet the financial accountability requirements through an interface.

Paragraph (b)(2)(i)(B) would require the system to maintain the data necessary to meet Federal reporting requirements for the IV–D program on a timely basis as prescribed by the Office of Child Support Enforcement. This proposal is similar to the functional requirements at § 307.10(b)(3) that a system must meet by October 1, 1997.

Paragraph (b)(2)(ii)(A), as proposed, requires the CSES to enable the Secretary of HHS to determine State incentive payments and penalty adjustments required by sections 452(g) and 458 of the Act through the use of automated processes to: (1) Maintain the necessary data for paternity establishment and child support enforcement activities in the State, and (2) calculate the paternity establishment percentage for the State for each fiscal year. Under this requirement, the

system must maintain the necessary data and calculate for each fiscal year the State's paternity establishment percentage under section 452(g) of the Act. The system must also maintain the data necessary to determine State incentive payments under section 458 of the Act. In addition, under paragraph (b)(1), the State will continue to be required to compute and distribute incentive payments to political subdivisions in accordance with § 307.10(b)(6) of the regulations.

Proposed paragraph (b)(2)(ii)(B) would require the system to enable the Secretary to determine State incentive payments and penalty adjustments required by sections 452(g) and 458 of the Act by having in place system controls to ensure: (1) The completeness, and reliability of, and ready access to, the data on State performance for paternity establishment and child support enforcement activities in the State, and (2) the accuracy of the paternity establishment percentage for the State for each fiscal year. Under this provision, the system controls apply to data related to the calculation of the State's paternity establishment percentage, and the calculation of incentive payments. Data regarding the paternity establishment percentage and incentive payments is reported to the Federal government in accordance with instructions issued by OCSE.

Proposed paragraph (b)(2)(iii) requires the system to have controls (e.g., passwords, or blocking of fields) to ensure strict adherence to the systems security policies described in § 307.13(a) of the regulations. Under the proposed § 307.13(a) discussed later in this preamble, the State IV–D agency must have written policies concerning access to data by IV–D agency personnel, and sharing of data with other persons.

Under the proposed paragraph (b)(3), the system must control, account for, and monitor the activities described in PRWORA not otherwise addressed in this part. As indicated previously, we plan to address the detailed systems functional requirements related to title IV–D program requirements modified or added by PRWORA in the Guide which we are in the process of revising and reissuing to the States.

Proposed paragraph (c) would require that the system, to the extent feasible, assist and facilitate the collection and disbursement of support payments through the State disbursement unit, operated under section 454B of the Act. Under paragraph (c)(1), the system must transmit orders and notices to employers and other debtors for the withholding of income: (1) Within 2 business days after the receipt of notice of income, and the income source subject to withholding from the court, another State, an employer, the Federal Parent Locator Service, or another source recognized by the State, and (2) using uniform formats prescribed by the Secretary. On January 27, 1998, OCSE issued a model wage withholding form (Approval 0970–0154) for use in implementing wage withholding (OCSE Action Transmittal 98–03).

The proposed paragraph (c)(2) would require the system to monitor accounts, on an ongoing basis, to identify promptly failures to make support payments in a timely manner. Paragraph (c)(3), as proposed, requires the system to automatically use enforcement procedures, including enforcement procedures under section 466(c) of the Act, if support payments are not made in a timely manner. These procedures include Federal and State income tax refund offset, intercepting unemployment compensation insurance benefits, intercepting or seizing other benefits through State or local governments, intercepting or seizing judgments, settlements, or lottery winnings, attaching and seizing assets of the obligor held in financial institutions, attaching public and private retirement funds, and imposing liens in accordance with section 466(a)(4) of the Act.

Proposed paragraph (d) requires that, to the maximum extent feasible, the system must be used to implement the expedited administrative procedures required by section 466(c) of the Act. These procedures include: ordering genetic testing for the purpose of establishing paternity under section 466(a)(5) of the Act; issuing a subpoena of financial or other information to establish, modify, or enforce a support order; requesting information from an employer regarding employment, compensation, and benefits of an employee or contractor; accessing records maintained in automated data bases such as records maintained by other State and local government agencies described in section 466(c)(1)(D) of the Act and certain records maintained by private entities regarding custodial and non-custodial parents described in section 466(c)(1)(D) of the Act; increasing the amount of monthly support payments to include an amount for support arrears; and changing the payee to the appropriate government entity when support has been assigned to the State, or required to be paid through the State disbursement unit.

The proposed paragraph (e) requires the State to establish a State case registry (SCR) which must be a component of the computerized child support enforcement system. This registry is essentially a directory of electronic case records or files. Proposed paragraph (e)(1) contains definitions which relate to terms used in this section.

Proposed paragraph (e)(2) describes the records which the registry must contain. Under the proposed paragraph (e)(2)(i), the registry must contain a record of every case receiving child support enforcement services under an approved State plan. Under the proposed paragraph (e)(2)(ii), the registry must contain a record of every support order established or modified in the State on or after October 1, 1998. Under the proposed paragraph (e)(3) each record must include standardized data elements for each participant. These data elements include the name(s), social security number(s), date of birth, case identification number(s), data elements required under paragraph (f)(1) of this section for the operation of the Federal case registry (FCR) and any other data elements required by the Secretary and set forth in instructions issued by the Office.

Under the proposed paragraph (e)(4), each record must include payment data for every case receiving services under the IV–D State plan that has a support order in effect. Under this proposed provision, the payment data must include the following information: (1) Monthly (or other frequency) support owed under the order, (2) other amounts due or overdue under the order including arrearages, interest or late payment penalties and fees, (3) any amount described in paragraph (e)(4)(i) and (ii) of this section that has been collected, (4) the distribution of such collected amounts, (5) the birth date and, beginning no later than October 1, 1999, the name and social security number of any child for whom the order requires the provision of support, and (6) the amount of any lien imposed under the order in accordance with section 466(a)(4) of the Act.

Under paragraph (e)(5), the State using the CSES must establish and update, maintain, and regularly monitor case records in the State case registry for cases receiving services under the State plan. We have not defined ''regularly.'' We invite public comment as to whether timeframes or other standards should be set for the monitoring and updating of records and if so what timeframes and standards would be applied. To ensure that information on an established IV–D case is up to date, the State must regularly update the record to make changes to the status of a case, the status of and information about the

participants of a case, and the other data contained in the case record.

Under the proposal, this would include the following: (1) Information on administrative actions and administrative and judicial proceedings and orders related to paternity and support, (2) information obtained from comparison with Federal, State or local sources of information, (3) information on support collections and distributions, and (4) any other relevant information.

Under the proposed paragraph (e)(6), the State is authorized to meet the requirement in paragraph (e)(2)(ii) of this section which would require the State case registry to have a record of every support order established or modified in the State on or after October 1, 1998, by linking local case registries of support orders through an automated information network. However, linked local case registries established in the State's computerized support enforcement system must meet all other requirements in paragraph (e) of this section.

Under proposed paragraph (f), the State must use the computerized support enforcement system to extract information, at such times, and in such standardized format or formats, as required by the Secretary, for the purposes of sharing and comparing information and receiving information from other data bases and information comparison services to obtain or provide information necessary to enable the State, other States, the Office of Child Support Enforcement or other Federal agencies to carry out the requirements of the Child Support Enforcement program. The use and disclosure of certain data is subject to the requirements of section 6103 of the Internal Revenue Code and the system must meet the security and safeguarding requirements for such data specified by the Internal Revenue Service. (See IRS Publication 1075 entitled ''The Information Security Guidelines for Federal, State and Local Agencies.'') The system must also comply with safeguarding and disclosure requirements specified in the Act. Timeframes not specified in Federal law regarding the transmission of information will be developed in consultation with the States and appropriate Federal and State workgroup(s). We invite public comment on whether these matters should be addressed in the regulation and if so, what timeframes should be imposed. The comparisons and sharing of information include the activities specified below.

Under proposed paragraph (f)(1), effective October 1, 1998, the State must furnish information to the Federal case registry, including updates as necessary and notices of expiration of support orders, except that States have until October 1, 1999, to furnish child data. We invite public comment as to whether timeframes for the submission of data on new cases or orders and for the submission of updated information should be specified and if so, what are appropriate standards.

Section 453(h)(2) and (3) of the Act require the inclusion of child data in the FCR and provides the Secretary of Treasury with access to FCR data for the purpose of administering those sections of the Internal Revenue Code of 1986 which grant tax benefits based on the support or residence of children, such as the Earned Income Tax Program. Under the proposal, the State must provide to the FCR the following data elements on participants: (1) State Federal Information Processing Standard (FIPS) and optionally, county code; (2) State case identification number; (3) State member identification number; (4) case type (IV–D, non-IV–D); (5) social security number and any necessary alternative social security numbers; (6) name, including first, middle, last name and any necessary alternative names; (7) sex (optional); (8) date of birth; (9) participant (custodial party, non-custodial parent, putative father, child); (10) family violence indicator (domestic violence or child abuse); (11) indication of an order; (12) locate request type (optional); (13) locate source (optional), and (14) any other information as the Secretary may require as set forth in instructions issued by the Office.

These data elements were developed in consultation with a workgroup comprising individuals from the State and the Federal level. The primary reason that only these data elements were selected for inclusion in the FCR is that they are static in nature, thereby requiring less update and maintenance. The intent of the FCR is to serve as a ''pointer'' system to quickly notify States of other States that have an interest and/or information on a participant. State automated child support systems will have more detailed data elements on participants. Upon receiving information from the FCR regarding participants in another State or States, States will be expected to use the Child Support Enforcement Network (CSENet) to ascertain any additional information on a participant that the State may need.

The information we are proposing to require under this paragraph implements section 453(h) requirements for establishment and maintenance of an automated Federal Case Registry of Support Orders.

With respect to domestic violence information identified in item 10 above and addressed under paragraph (f)(1)(x) of this proposal, section 453(b)(2) of the Act states that no information in the Federal Parent Locator Service shall be disclosed to any person if the State has notified the Secretary that the State has reasonable evidence of domestic violence or child abuse and the disclosure of such information could be harmful to the custodial parent or the child of such parent. Unless otherwise specified in section 453(b)(2), OCSE will not disclose any information on a participant in a IV–D case or non-IV–D support order to any person if the State has included a ''family violence'' indicator on such participant.

Under proposed paragraph (f)(2), the CSES must request and exchange information with the Federal parent locator service for the purposes specified in section 453 of the Act. As stipulated in statute, the Secretary will not disclose information received under section 453 of the Act when to do so would contravene the national policy or security interests of the United States or the confidentiality of census data or as indicated above if the Secretary has received notice of reasonable evidence of domestic violence or child abuse and the disclosure of such information could be harmful to the custodial parent or the child of such parent.

Under proposed paragraph (f)(3), the CSES must exchange information with State agencies, both within and outside of the State, administering programs under title IV–A and title XIX of the Act, as necessary to perform State agency responsibilities under the Child Support Enforcement program.

Under the proposed paragraph (f)(4), the CSES must exchange information with other agencies of the State, and agencies of other States, and interstate information networks, as necessary and appropriate, to assist the State and other States in carrying out the Child Support Enforcement program.

Security and Confidentiality for Computerized Support Enforcement Systems

With the mandates of the Family Support Act of 1988, and most recently of PRWORA, State public assistance agencies have been given additional tools to locate individuals involved in child support cases and visitation and custody orders and their assets. These tools are used in conjunction with or operate through the State's automated

data processing (ADP) system. With the use of these Automated Data Processing (ADP) systems, and the data they maintain and manipulate, come inevitable concerns about the security and privacy of the sensitive and confidential personal, demographic, and financial information resident in these systems. In order to protect this information, our regulations require that States must have policies and procedures in place to ensure the integrity and validity of their automated data processing systems.

Under current rules, States must conduct reviews of automated systems to ensure their security and assess vulnerability, and maintain reports of those reviews for HHS to examine should circumstances warrant. Further, Federal OCSE certification requirements for automated child support systems likewise have specific requirements and objectives relative to physical and operational security, and of the privacy of the data those systems maintain. In addition, numerous Federal and State agencies that share data with States' child support agencies also impose varying degrees of regulatory restriction on the availability, privacy, security and use of the data exchanged. A primary example is the restrictions imposed by the U.S. Department of Treasury's Internal Revenue Service on the income tax refund and 1099 program information provided to States' child support agencies.

Language in PRWORA further strengthens these security requirements, clearly addressing the concerns all Americans have for the privacy of personal information while recognizing the need for effective program administration.

We are proposing to reiterate statutory requirements in section 454A(d) of the Act addressing security and privacy issues by adding new regulations at 45 CFR 307.13, ''Security and confidentiality for computerized support enforcement systems in operation after October 1, 1997.''

Proposed paragraph (a) would require the State IV–D agency to have safeguards on the integrity, accuracy, completeness of, access to, and use of data in the CSES, including written policies concerning access to data by IV–D agency personnel and sharing of data with other persons. Under proposed paragraph (a)(1), these policies must address access to and use of data to the extent necessary to carry out the IV–D program. This includes the access to and use of data by any individual involved in the IV–D program, including personnel providing IV–D services under a cooperative or purchase-of-service agreement or other arrangement.

Under the proposed paragraph (a)(2), these policies must specify the data that may be used for particular IV–D program purposes, and the personnel permitted access to such data. This provision applies to all personnel who have access to data on the CSES.

Under the proposed paragraph (a)(3) these policies must specify the non-IV–D purposes for which and the non-IV–D persons to whom data may be disclosed.

Paragraph (b), as proposed, would require the State IV–D agency to monitor routine access and use of the computerized support enforcement system through methods such as audit trails and feedback mechanisms to guard against and identify unauthorized access or use. States have flexibility in meeting this requirement, so long as the IV–D agency monitors routine access and use of the system.

Proposed paragraph (c) would require the State IV–D agency to have procedures to ensure that all personnel, including State and local staff and contractors, who may have access to or be required to use confidential program data in the CSES are: (1) Informed of applicable requirements and penalties, including those in section 6103 of the Internal Revenue Service Code, and (2) adequately trained in security procedures. Under this requirement, State procedures must address Federal and State safeguarding requirements, including the safeguarding of information regulations at 45 CFR 303.21 and 303.70(d)(2), and the security and safeguarding requirements for data obtained from the Internal Revenue Service. (See IRS publication 1075, entitled ''Tax Information Security Guidelines for Federal, State and Local Agencies.'' This publication was sent to the IV–D agency in each State by OCSE.)

Finally, paragraph (d) would require the IV–D agency to have administrative penalties, including dismissal from employment, for unauthorized access to, disclosure or use of confidential information. The intent of Congress in PRWORA is clear with regard to systems and data security: we must ensure that adequate safeguards are in place to protect the privacy of those we serve. In drafting these regulations, we have attempted to err on the side of comprehensiveness when addressing the needs of security in our automated data processing systems, but to do so without injecting a greater Federal presence in the operation of States' child support enforcement systems. To that end, we are seeking comments from all sectors of the child support program, not just those concerned with the operation of States' automated data processing systems. Further, we are seeking comment in all areas of computer systems security and data privacy relative to these proposed regulations, be it the safety and security of data center operations and equipment, personnel security, data availability and access within the program, and the control of data gathered from and shared with outside agencies. We are also interested in whether these proposed regulations should be more prescriptive in all or part, relative to security and privacy, or whether there are other venues to ensure and/or strengthen data and systems security, such as through formal written guidance manuals, enhanced system certification requirements, action transmittals, training, or a more visible Federal presence and oversight in this area.

Approval of Advance Planning Documents

The regulations at 45 CFR 307.15 speak to certain APD requirements specific to CSE automated system development and we are proposing in these rules to make conforming amendments to address the changes made by PRWORA and as indicated previously, to codify certain existing requirements and authorities related to APD and APDU oversight. Specifically we are proposing to revise 45 CFR 307.15, ''Approval of advance planning documents for computerized support enforcement systems,'' to reflect new functional requirements the State must meet by October 1, 2000.

Currently, paragraph (b)(2) requires that the APD specify how the objectives of the system will be carried out throughout the State, including a projection of how the proposed single State system will meet the functional requirements and encompass all political subdivisions of the State by October 1, 1997.

Federal law now requires each State to have in operation by October 1, 1997, a statewide CSES that meets specified functional requirements, and a statewide system that also meets additional functional requirements by October 1, 2000. Therefore, the proposed paragraph (b)(2) would require that the APD specify how the objectives of a CSES that meets the functional requirements in § 307.10 of the regulations, or the functional requirements in § 307.11 of the regulations, will be carried out throughout the State including a projection of how the proposed system

will meet the functional requirements and encompass all political subdivisions of the State by October 1, 1997, or also meet the additional functional requirements and encompass all political subdivisions of the State by October 1, 2000.

Under this proposal, the State may submit a separate APD for each group of functional requirements. The State may also update its current APD for the development and implementation of a system to meet the October 1, 1997, requirements in order to address the functional requirements that must be met by October 1, 2000. We also propose to replace the citation ''§ 307.10'' with the citations ''§§ 307.10, or 307.11'' where it appears in paragraphs (a), (b), and (c).

A number of States experienced difficulty in developing systems that complied with Family Support Act requirements and, as a consequence, failed to meet the October 1, 1997, deadline for having such systems in place. As a result, OCSE has reviewed the Federal and State experience over the past several years and based on that review, we are putting into place administratively a number of improvements in the Federal and State oversight process. In addition, we are proposing several changes to these regulations that will strengthen the oversight and management of CSE systems development projects.

Continuing a trend begun last year, we will be more aggressively monitoring State CSE development efforts. We intend to conduct on-site technical assistance visits and reviews in all States this year, as we did last year. States whose system development efforts are lagging will receive multiple visits. We are in the process of procuring the services of one or more contractors to augment our ability to monitor States progress and provide project assistance.

In addition, we will be more closely reviewing State APD and APDU submissions. One area of focus will be on the resources available to: (1) Monitor the progress of systems development efforts, (2) assess deliverables, and (3) take corrective action if the project goes astray. Using our current regulatory authority, we will not approve a State's APD unless we are convinced that adequate resources and a well conceived project management approach are available for these purposes, as well as for the systems design and implementation processes.

Most States already retain Quality Assurance assistance, using either contractors or State staff. We will not approve a State's APD unless it evidences adequate quality assurance services. These services may be procured from the private sector, or may be provided by State staff, e.g., a State's information technology office, State auditor, State data center, etc. States with a history of troubled systems development efforts will have to rigorously demonstrate that such resources are available to the project and are integrated into the project's management. We will require that all reports prepared by a State's quality assurance provider be submitted directly to OCSE at the same time they are submitted to the State's project management.

Further, we intend to more systematically determine and monitor key milestones in States' CSE systems development efforts, and to more closely tie project funding to those milestones. Systems should be implemented in phased, successive modules as narrow in scope and brief in duration as practicable, each of which serves a specific part of the overall child support mission and delivers a measurable benefit independent of future modules. To that end, we are proposing to add language to § 307.15(b)(9) to clarify that the APD must contain an estimated schedule of life-cycle milestones and project deliverables (modules) related to the description of estimated expenditures by category. We would also include in the proposed regulation a list of milestones which must be addressed as provided in the ''DHHS State Systems Guide'' (September 1996). These life cycle milestones should include, where applicable, developing the general and/or detailed system designs, preparing solicitations and awarding contracts for contractor support services, hardware and software, developing a conversion plan, test management plan, installation plan, facilities management plan, training plan, user's manuals, and security and contingency plans; converting and testing data, developing, modifying or converting software, testing software, training staff, installing, testing and accepting systems. Specifically, we are proposing that the APD must include milestones relative to the size, complexity and cost of the project and at a minimum address: Requirements analysis, program design, procurement and project management.

We will treat seriously States' failure to meet critical milestones and deliverables or to report promptly and fully on their progress toward meeting those milestones. We will approach these problems in several ways. States shall reduce risk by using, when possible, fully-tested pilots, simulations or prototypes that accurately model the full-scale system; establish clear measures and accountability for project progress, and secure substantial worker involvement and buy-in throughout the project.

With respect to funding, we will generally provide funding under an approved APD only for the most immediate milestones and funding related to achievement of later milestones will be contingent upon the successful completion of antecedent milestones. For States with proven track records in CSE systems development, we will continue our practice of providing funding approval on an annual basis. Since current regulations provide sufficient authority to limit funding in this way, we are not proposing any additional regulatory changes but rather reaffirming in this preamble management practices which we will follow under existing authority.

In addition, we are proposing to revise § 307.15(b)(10) to expand the requirements for an implementation plan and backup procedures. This proposed language would require certain States to obtain independent validation and verification services (IV&V). These States would include those: (1) That do not have in place a statewide automated child support enforcement system that meets the requirements of the FSA of 1988; (2) States which fail to meet a critical milestone, as identified in their APDs; (3) States which fail to timely and completely submit APD updates; (4) States whose APD indicates the need for a total system redesign; (5) States developing systems under waivers pursuant to section 452(d)(3) of the Social Security Act or, (6) States whose system development efforts we determine are at risk of failure, significant delay, or significant cost overrun.

With respect to this last item, we would point out that Year 2000 systems compliance is critical to State child support enforcement program automation efforts. Accordingly, the requirement above would apply to States which are not Year 2000 compliant and which do not have an existing assessment and monitoring mechanism in place. We would consider any such state at serious risk of systems failure.

OCSE will carefully review States' system development efforts, using States' APD and APDU submissions, other documentation, on-site reviews and monitoring, etc., relating to States' efforts to meet PRWORA requirements. Based on this review, OCSE may

determine that a State must obtain Independent Validation and Verification (IV&V) services and will so require as a condition of its approval of the State's APD and associated funding or contract-related documents. OCSE is in the process of hiring an Independent Validation and Verification (IV&V) contractor to assist in making this determination.

Independent validation and verification efforts must be conducted by an entity that is independent from the State. We would only provide very limited exceptions to this requirement based on a State's request. For example, we would consider an exception in a situation where a State has an existing IV&V provider in place which is independent of the child support agency (or other entity responsible for systems development), which meets all criteria set forth in these rule and where the State's systems development efforts are on track as a result.

The independent validation and verification provider must:

- Develop a project workplan. The plan must be provided directly to OCSE at the same time it is given to the State.
- Review and make recommendations on both the management of the project, both State and vendor, and the technical aspects of the project. The results of this analysis must be provided directly to OCSE at the same time it is given to the State.
- Consult with all stakeholders and assess the user involvement and buy-in regarding system functionality and the system's ability to meet program needs.
- Conduct an analysis of past project performance (schedule, budget) sufficient to identify and make recommendations for improvement.
- Provide a risk management assessment and capacity planning services.
- Develop performance metrics which allow tracking of project completion against milestones set by the State.

The RFP and contract for selecting the IV&V provider must be submitted to OCSE for prior approval and must include the experience and skills of the key personnel proposed for the IV&V analysis. In addition, the contract must specify by name the key personnel who actually will work on the project.

ACF recognizes that many States already have obtained IV&V services. OCSE will review those arrangements to determine if they meet the criteria specified above.

The requirement that a State obtain an IV&V provider if it significantly misses one or more milestones in their APD is intended to assist the State in obtaining an independent assessment of their system development project. The IV&V provider will make an independent assessment and recommendations for addressing the systemic problems that resulted in the missed milestones before the situation reaches the point where suspension of the State's APD and associated Federal funding approval is necessary. Any reports prepared by an IV&V provider must be submitted to OCSE at the same time they are submitted to the State's project manager.

In addition, if a State fails to meet milestones in its APD, OCSE may fully or partially suspend the APD and associated funding. OCSE currently has authority under 45 CFR 307.40 to suspend a State's APD if ''the system ceases to comply substantially with the criteria, requirements, and other provision of the APD * * *'' This action may include suspension of future systems efforts under the APD until satisfactory corrective action is taken. In such cases, funding for current efforts, i.e., those not affected by the suspension, would continue to be available, although OCSE would closely monitor such expenditures. In more serious cases, suspension would involve cessation of all Federal funds for the project until such time as the State completed corrective action.

We invite comments on this approach as well as suggestions for alternative actions for addressing missed milestones.

Related to this discussion, the Department has recently been discussing with our partners, including State staff, representatives of the corporate community, and other Federal agencies, the need to re-examine the processes associated with development of State systems. Many issues and concerns have been raised in these discussions, including the contracting process and risk sharing among the partners.

There is broad consensus among the partners that a re-examination of the processes associated with development of State systems is necessary. DHHS is committed to moving forward with this process with the goal of implementing changes that will facilitate and improve State system development efforts. We would expect that this process would build upon a recent effort, termed the ''Information Technology Partnership,'' which resulted in changes in policies regarding system transfers, depreciation and expensing, and increases in the thresholds for prior Federal approval of certain APDs and contracts.

Review and Certification of Mandatory Automated Systems

We are proposing to revise 45 CFR 307.25, ''Review and certification of computerized support enforcement systems,'' by replacing the citation ''§ 307.10'' with the citations ''§§ 307.10, or 307.11'' in the introductory language to reflect other changes made in this document.

FFP Availability

We are proposing to revise § 307.30, ''Federal financial participation at the 90 percent rate for computerized support enforcement systems'', to reflect changes made to section 455(a)(3) of the Act by section 344(b)(1) of PRWORA regarding the limited extension of 90 percent Federal financial participation.

Currently, paragraph (a) of the regulation provides that, until September 30, 1995, Federal financial participation was available at the 90 percent rate in expenditures for the planning, design, development, installation or enhancement of a computerized support enforcement system as described in §§ 307.5 and 307.10, if specific conditions are met. Federal law extends the availability of FFP at the 90 percent rate until September 30, 1997, for such activities included in an approved APD or APDU submitted on or before September 30, 1995.

Therefore, proposed paragraph (a) would specify that financial participation is available at the 90 percent rate for expenditures made during Federal fiscal years 1996 and 1997 for the planning, design, development, installation or enhancement of a CSES as described in §§ 307.5 and 307.10, but limited to the amount in an APD or APDU submitted on or before September 30, 1995, and approved by OCSE.

Currently, paragraph (b) provides that Federal funding at the 90 percent rate is available in expenditures for the rental or purchase of hardware and proprietary operating/vendor software during the planning, design, development, installation, enhancement or operation of a CSES described in §§ 307.5 and 307.10.

To reflect the statutory changes discussed earlier, paragraph (b)(1), as proposed, would provide Federal funding at the 90 percent rate until September 30, 1997, on a limited basis in accordance with paragraph (a) of this section for such expenditures.

Similarly, under proposed paragraph (b)(2), FFP is available at the 90 percent rate until September 30, 1997, for expenditures for the rental or purchase

of proprietary operating/vendor software necessary for the operation of hardware during the planning, design, development, installation or enhancement of a computerized support enforcement system in accordance with the limitations in paragraph (a) of this section, and the OCSE guideline entitled ''Automated Systems for Child Support Enforcement: A Guide for States.'' FFP at the 90 percent rate remains unavailable for proprietary applications software developed specifically for a CSES. (See OCSE–AT–96–10 dated December 23, 1996 regarding the procedures for requesting and claiming 90 percent Federal funding.)

ACF has issued proposed regulations at 63 FR 10173, on March 2, 1998, to implement the provisions in section 455(a)(3)(B) of the Act, regarding the availability and allocation of Federal funding at the 80 percent rate for Statewide systems.

With respect to regular funding, we are proposing to amend 45 CFR 307.35, ''Federal financial participation at the applicable matching rate for computerized support enforcement systems'', by replacing the citation ''§ 307.10'' with the citations ''§§ 307.10, or 307.11'' in paragraph (a) to reflect other changes made in this document.

Suspension of APD Approval

Similar to the above, we are proposing to amend 45 CFR 307.40, ''Suspension of approval of advance planning document for computerized support enforcement systems'', to make a conforming change to replace the citation ''§ 307.10'' with the citations ''§§ 307.10, or 307.11'' in paragraph (a) to reflect other changes made in this document.

Executive Order 12866

Executive Order 12866 requires that regulations be drafted to ensure that they are consistent with the priorities and principles set forth in the Executive Order. The Department has determined that this proposed rule is consistent with these priorities and principles. The proposed changes in this rule, including IV–D State plan amendments, new functional requirements for CSESs, and limited extension of 90 percent Federal funding, reiterate the language in the statute, and do not add any non-statutory requirements.

Regulatory Flexibility Analysis

The Regulatory Flexibility Act (Pub. L. 96–354) requires the Federal government to anticipate and reduce the impact of regulations and paperwork requirements on small entities. The Secretary certifies that these proposed regulations will not have a significant economic impact on a substantial number of small entities because the primary impact of these regulations is on State governments.

Paperwork Reduction Act

Under the Paperwork Reduction Act of 1995, Public Law 104–13, all Departments are required to submit to the Office of Management and Budget (OMB) for review and approval any reporting or recordkeeping requirements inherent in a proposed or final rule. Interested parties may comment to OMB on these recordkeeping requirements as described below. This NPRM contains information collection requirements in §§ 302.85(a)(1) and (2), 307.11 (e) and (f), 307.13(a) and (c), and 307.15(b)(2) which the Department has submitted to OMB for its review.

More specifically, §§ 302.85(a)(1) and (2) include IV–D State plan amendments; §§ 307.11(e) and (f) include procedures for establishing a State Case Registry (SCR) and for providing information to the Federal Case Registry (FCR), § 307.13(a) includes written policies concerning access to data by IV–D agency personnel and sharing of data with other persons to carry out IV–D program activities, § 307.13(c) includes procedures that all personnel with access to or use of confidential data in the CSES be informed of applicable requirements and penalties, and receive training in security procedures, and § 307.15 describes several requirements for an advance planning document for a Statewide computerized support enforcement system.

The respondents to the information collection requirements in this rule are the State child support enforcement agencies of the 50 States, the District of Columbia, Guam, Puerto Rico, and the Virgin Islands. The respondents also include the courts that handle family, juvenile, and/or domestic relations cases within the 50 States, the District of Columbia, Guam, Puerto Rico, and the Virgin Islands. The Department requires this collection of information: (1) To determine compliance with the requirements for a Statewide computerized support enforcement system; (2) to determine State compliance with statutory requirements regarding informing IV–D personnel of integrity and security requirements for data maintained in the CSES; and (3) for States to make funding requests through advance planning documents, and APD updates.

These information collection requirements will impose the estimated total annual burden on the States described in the table below.

Information collection	Number of respondents	Responses per respondent	Average burden per response	Total annual burden
302.85(a) (1) and (2)	27	1	.5	13.5
307.11(f)(1)	54	.....	114.17	6,165
307.11(f)(1)	54	1	46.27	2,499
307.11(f)(1)	54	162,963	.083	730,400
307.11(f)(1)	54	52	1.41	3,959
307.11(e)(2)(ii)	54	25,200	.046	62,597
307.11(e)(1)(ii)	3,045	447	.029	39,472
307.13 (a) and (c)	27	1	16.7	451
307.15 (APD)	9.33	1	240	2,239
307.15 (APDU)	62.33	1	60	3,740
Total	.....	.....	.....	851,535.5

The Administration for Children and Families will consider comments by the public on the proposed information collection in:

- Evaluating whether the proposed collections are necessary for the proper performance of the functions of ACF, including whether the information will have practical utility;
- Evaluating the accuracy of ACF's estimate of the burden of the proposed

collection of information, including the validity of the methodology and assumptions used;

• Enhancing the quality, usefulness, and clarity of the information to be collected; and

• Minimizing the burden of the collection of information on those who have to respond, including the use of appropriate automated, electronic, mechanical, or other technology to permit electronic submission of responses.

OMB is required to make a decision concerning the collection of information contained in these proposed regulations between 30 and 60 days after publication of this document in the **Federal Register**. Therefore, a comment is best assured of having its full effect if OMB receives it within 30 days of publication. Written comments to OMB for the proposed information collection should be sent directly to the following: Office of Management and Budget, Paperwork Reduction Project, 725 17th Street, NW., Washington, DC 20503, Attn: Ms. Wendy Taylor.

List of Subjects

45 CFR Part 302

Child support, Grant programs—social programs, Reporting and recordkeeping requirements, Unemployment compensation.

45 CFR Part 304

Child support, Grant programs—social programs, Penalties, Reporting and recordkeeping requirements, Unemployment compensation.

45 CFR Part 307

Child support, Grant programs—social programs, Computer technology, Reporting and recordkeeping requirements.

(Catalog of Federal Domestic Assistance Program No. 93.563, Child Support Enforcement Program.)

Dated: March 6, 1998.

Olivia A. Golden,

Assistant Secretary for Children and Families.

Approved: March 17, 1998.

Donna E. Shalala,

Secretary, Department of Health and Human Services.

For the reasons set forth in the preamble, 45 CFR parts 302, 304 and 307 are proposed to be amended as set forth below.

PART 302—STATE PLAN REQUIREMENTS

1. The authority citation for part 302 continues to read as follows:

Authority: 42 U.S.C. 651 through 658, 660, 664, 666, 667, 1302, 1396a(a)(25), 1396b(d)(2), 1396b(o), 1396b(p) and 1396(k).

§ 302.85 [Amended]

2. Section 302.85 is amended by revising paragraph (a) to read as follows:

* * * * *

(a) *General.* The State plan shall provide that the State will have in effect a computerized support enforcement system:

(1) By October 1, 1997, which meets all the requirements of title IV–D of the Act which were enacted on or before the date of enactment of the Family Support Act of 1988 in accordance with § 307.5 and § 307.10 of this chapter and the OCSE guideline entitled ''Automated Systems for Child Support Enforcement: A Guide for States.'' This guide is available from the Child Support Information Systems Division, Office of State Systems, ACF, 370 L'Enfant Promenade, SW., Washington, DC 20447; and

(2) By October 1, 2000, which meets all the requirements of title IV–D of the Act enacted on or before the date of enactment of the Personal Responsibility and Work Opportunity Reconciliation Act of 1996 in accordance with § 307.5 and § 307.11 of this chapter and the OCSE guideline referenced in paragraph (a)(1) of this section.

* * * * *

PART 304—FEDERAL FINANCIAL PARTICIPATION

1. The authority citation for part 304 continues to read as follows:

Authority: 42 U.S.C. 651 through 655, 657, 1302, 1396a(a)(25), 1396b(d)(2), 1396b(o), 1396b(p), and 1396(k).

§ 304.20 [Amended]

2. In § 304.20, reference to ''Until September 30, 1995'' in paragraph (c) is revised to read ''Until September 30, 1997''.

PART 307—COMPUTERIZED SUPPORT ENFORCEMENT SYSTEMS

1. The authority citation for part 307 is revised to read as follows:

Authority: 42 U.S.C. 652 through 658, 664, 666, through 669A, and 1302.

§ 307.0 [Amended]

2. Section 307.0 is amended by revising the introductory text; redesignating paragraphs (c) through (h) as paragraphs (d) through (i); and adding a new paragraph (c) to read as follows:

* * * * *

This part implements sections 452(d) and (e), 454(16) and (24) and 454A, and 455(a)(1)(A) and (B), and (a)(3)(A) of the Act which prescribe:

* * * * *

(c) Security and confidentiality requirements for computerized support enforcement systems;

* * * * *

§ 307.1 [Amended]

3. Section 307.1 is amended by redesignating paragraphs (b) through (j) as paragraphs (c) through (k); replacing the citation ''§ 307.10'' with the citations ''§§ 307.10, or 307.11'' in the newly designated paragraphs (d) and (g); and adding a new paragraph (b) to read as follows:

* * * * *

(b) Business day means a day on which State offices are open for business.

* * * * *

§ 307.5 [Amended]

4. Section 307.5 is amended by removing paragraphs (a) and (b); redesignating paragraphs (c) through (h) as paragraphs (b) through (g); replacing the citation ''§ 307.10'' with the citations ''§§ 307.10, or 307.11'' in the newly redesignated paragraph (d); and adding a new paragraph (a) to read as follows:

* * * * *

(a) Basic requirement.

(1) By October 1, 1997, each State must have in effect an operational computerized support enforcement system, which meets Federal requirements under § 302.85(a)(1). OCSE will review each system to certify that these requirements are met; and

(2) By October 1, 2000, each State must have in effect an operational computerized support enforcement system, which meets Federal requirements under § 302.85(a)(2). OCSE will review each system to certify that these requirements are met.

* * * * *

5. Section 307.10 is amended in the introductory text by replacing the citation ''§ 302.85(a)'' with the citation ''§ 302.85(a)(1)''; replacing ''AFDC'' with ''TANF'' in paragraph (b)(10); removing paragraph (b)(14); redesignating paragraphs (b)(15) and (16) as paragraphs (b)(14) and (15); and revising the section heading to read as follows:

§ 307.10 Functional requirements for computerized support enforcement systems in operation by October 1, 1997.

* * * * *

6. Section 307.11 is added to read as follows:

§ 307.11 Functional requirements for computerized support enforcement systems in operation by October 1, 2000.

At a minimum, each State's computerized support enforcement system established and operated under the title IV–D State plan at § 302.85(a)(2) must:

(a) Be planned, designed, developed, installed or enhanced, and operated in accordance with an initial and annually updated APD approved under § 307.15 of this part;

(b) Control, account for, and monitor all the factors in the support collection and paternity determination processes under the State plan. At a minimum, this includes the following:

(1) The activities described in § 307.10, except paragraphs (b)(3), (8) and (11); and

(2) The capability to perform the following tasks with the frequency and in the manner required under, or by this chapter:

(i) Program Requirements. Performing such functions as the Secretary may specify related to management of the State IV–D program under this chapter including:

(A) Controlling and accounting for the use of Federal, State and local funds in carrying out the program either directly or through an interface with State financial management and expenditure information; and

(B) Maintaining the data necessary to meet Federal reporting requirements under this chapter in a timely basis as prescribed by the Office;

(ii) Allocation of Performance Indicators. Enabling the Secretary to determine the incentive payments and penalty adjustments required by sections 452(g) and 458 of the Act by:

(A) Using automated processes to:

(1) Maintain the requisite data on State performance for paternity establishment and child support enforcement activities in the State; and

(2) Calculate the paternity establishment percentage for the State for each fiscal year;

(B) Having in place system controls to ensure the completeness, and reliability of, and ready access to, the data described in paragraph (b)(2)(i)(A)(1) of this section, and the accuracy of the calculation described in paragraph (b)(2)(i)(A)(2) of this section; and

(iii) System Controls: Having systems controls (e. g., passwords or blocking of fields) to ensure strict adherence to the policies described in § 307.13(a); and

(3) Activities described in Title III of the Personal Responsibility and Work Opportunity Reconciliation Act of 1996 not otherwise addressed in this part.

(c) Collection and Disbursement of Support Payments. To the maximum extent feasible, assist and facilitate the collection and disbursement of support payments through the State disbursement unit operated under section 454B of the Act through the performance of functions which, at a minimum, include the following:

(1) Transmission of orders and notices to employers and other debtors for the withholding of income:

(i) Within 2 business days after receipt of notice of income, and the income source subject to withholding from a court, another State, an employer, the Federal Parent Locator Service, or another source recognized by the State; and

(ii) Using uniform formats prescribed by the Secretary;

(2) Ongoing monitoring to promptly identify failures to make timely payment of support; and

(3) Automatic use of enforcement procedures, including procedures under section 466(c) of the Act if payments are not timely;

(d) Expedited Administrative Procedures. To the maximum extent feasible, be used to implement the expedited administrative procedures required by section 466(c) of the Act.

(e) State Case Registry. Have a State case registry that meets the requirements of this paragraph.

(1) Definitions. When used in this paragraph and paragraph (f) of this section, the following definitions shall apply.

(i) *Participant* means an individual who owes or is owed support or with respect to or on behalf of whom a support obligation is sought to be established or other individual connected to an order of support or a child support case being enforced.

(ii) *Participant type* means the custodial party, non-custodial parent, putative father, or child, associated with a case or support order contained in the Federal case registry.

(iii) *locate request type* refers to the purpose of the request for locate services to the Federal case registry. For example, paternity establishment, parental kidnapping or custody and visitation.

(iv) *locate source type* refers to the external sources a locate submitter desires the Federal case registry to match against.

(2) The State case registry shall contain a record of:

(i) Every case receiving child support enforcement services under an approved State plan; and

(ii) Every support order established or modified in the State on or after October 1, 1998.

(3) Standardized data elements shall be included for each participant. These data elements shall include:

(i) Names;

(ii) Social security numbers;

(iii) Dates of birth;

(iv) Case identification numbers;

(v) Other uniform identification numbers;

(vi) Data elements required under paragraph (f)(1) of this section necessary for the operation of the Federal case registry; and

(vii) Any other information that the Secretary may require as set forth in instructions issued by the Office.

(4) The record shall include information for every case in the State case registry receiving services under an approved State plan that has a support order in effect. The information must include:

(i) The amount of monthly (or other frequency) support owed under the order;

(ii) Other amounts due or overdue under the order including arrearages, interest or late payment penalties and fees;

(iii) Any amounts described in paragraph (e)(4)(i) and (ii) of this section that have been collected;

(iv) The distribution of such collected amounts;

(v) The birth date and, beginning no later than October 1, 1999, the name and social security number of any child for whom the order requires the provision of support; and

(vi) The amount of any lien imposed in accordance with section 466(a)(4) of the Act to enforce the order.

(5) Establish and update, maintain, and regularly monitor case records in the State case registry for cases receiving services under the State plan. To ensure information on an established IV–D case is up to date, the State should regularly update the system to make changes to the status of a case, the participants of a case, and the data contained in the case record. This includes the following:

(i) Information on administrative actions and administrative and judicial proceedings and orders related to paternity and support;

(ii) Information obtained from comparison with Federal, State or local sources of information;

(iii) Information on support collections and distributions; and

(iv) Any other relevant information.

(6) States may link local case registries of support orders through an automated information network in meeting paragraph (e)(2)(ii) of this section provided that all other requirements of this paragraph are met.

(f) Information Comparison and other Disclosure of Information. Extract

information, at such times and in such standardized format or formats, as may be required by the Secretary, for purposes of sharing and comparing with, and receiving information from, other data bases and information comparison services, to obtain or provide information necessary to enable the State, other States, the Office or other Federal agencies to carry out this chapter. As applicable, these comparisons and disclosures must comply with the requirements of section 6103 of the Internal Revenue Code of 1986 and the requirements of section 453 of the Act. The comparisons and sharing of information include:

(1) Effective October 1, 1998, (or for the child data, not later than October 1, 1999 the State furnishing the following information to the Federal case registry, including updates as necessary and notices of expiration of support orders, on participants in cases receiving services under the State plan, and in non-IV–D support orders established or modified on or after October 1, 1998:

(i) State Federal Information Processing Standard (FIPS) code and optionally, county code;

(ii) State case identification number;

(iii) State member identification number;

(iv) Case type (IV–D, non-IV–D);

(v) Social security number and any necessary alternative social security numbers;

(vi) Name, including first, middle, last name and any necessary alternative names;

(vii) Sex (optional);

(viii) Date of birth;

(ix) Participant type (custodial party, non-custodial parent, putative father, child);

(x) Family violence indicator (domestic violence or child abuse);

(xi) Indication of an order;

(xii) Locate request type (optional);

(xiii) Locate source (optional); and

(xiv) Any other information the Secretary may require as set forth in instructions issued by the Office.

(2) Requesting or exchanging information with the Federal parent locator service for the purposes specified in section 453 of the Act;

(3) Exchanging information with State agencies, both within and outside of the State, administering programs under titles IV–A and XIX of the Act, as necessary to perform State agency responsibilities under this chapter and under such programs; and

(4) Exchanging information with other agencies of the State, and agencies of other States, and interstate information networks, as necessary and appropriate, to assist the State and other States in carrying out the purposes of this chapter.

7. Section 307.13 is added to read as follows:

§ 307.13 Security and Confidentiality for computerized support enforcement systems in operation after October 1, 1997.

The State IV–D agency shall:

(a) *Information Integrity and Security.* Have safeguards on the integrity, accuracy, completeness of, access to, and use of data in the computerized support enforcement system. These safeguards shall include written policies concerning access to data by IV–D agency personnel, and the sharing of data with other persons to:

(1) Permit access to and use of data to the extent necessary to carry out the State IV–D program under this chapter; and

(2) Specify the data which may be used for particular IV–D program purposes, and the personnel permitted access to such data;

(3) Limit access and disclosure to non-IV–D personnel or for Non-IV–D program purposes as authorized by Federal law.

(b) *Monitoring of access.* Monitor routine access to and use of the computerized support enforcement system through methods such as audit trails and feedback mechanisms to guard against, and promptly identify unauthorized access or use;

(c) *Training and Information.* Have procedures to ensure that all personnel, including State and local staff and contractors, who may have access to or be required to use confidential program data in the computerized support enforcement system are:

(1) Informed of applicable requirements and penalties, including those in section 6103 of the Internal Revenue Service Code and section 453 of the Act; and

(2) Adequately trained in security procedures; and

(d) *Penalties.* Have administrative penalties, including dismissal from employment, for unauthorized access to, disclosure or use of confidential information.

§ 307.15 [Amended]

8. Section 307.15 is amended by replacing the citation ''§ 307.10'' with the citations ''§§ 307.10, or 307.11'' in paragraphs (a), (b), and (c); and revising paragraph (b)(2), (b)(9) and (b)(10) to read as follows:

* * * * *

(b) * * *

(2) The APD must specify how the objectives of the computerized support enforcement system in §§ 307.10, or 307.11 will be carried out throughout the State; this includes a projection of how the proposed system will meet the functional requirements of §§ 307.10, or 307.11 and how the single State system will encompass all political subdivisions in the State by October 1, 1997, or October 1, 2000 respectively.

* * * * *

(9) The APD must contain a proposed budget and schedule of life-cycle milestones relative to the size, complexity and cost of the project which at a minimum address requirements analysis, program design, procurement and project management; and, a description of estimated expenditures by category and amount for:

(i) Items that are eligible for funding at the enhanced matching rate, and

(ii) items related to developing and operating the system that are eligible for Federal funding at the applicable matching rate;

(10) The APD must contain an implementation plan and backup procedures to handle possible failures in system planning, design, development, installation or enhancement.

(i) These backup procedures must include provision for independent validation and verification (IV&V) analysis of a State's system development effort in the case of States:

(A) that do not have in place a statewide automated child support enforcement system that meets the requirements of the FSA of 1988;

(B) States which fail to meet a critical milestone, as identified in their APDs;

(C) States which fail to timely and completely submit APD updates;

(D) States whose APD indicates the need for a total system redesign;

(E) States developing systems under waivers pursuant to section 452(d)(3) of the Social Security Act; or,

(F) States whose system development efforts we determine are at risk of failure, significant delay, or significant cost overrun.

(ii) Independent validation and verification efforts must be conducted by an entity that is independent from the state (unless the State receives an exception from OCSE) and the entity selected must:

(A) Develop a project workplan. The plan must be provided directly to OCSE at the same time it is given to the State.

(B) Review and make recommendations on both the management of the project, both State and vendor, and the technical aspects of the project. The IV&V provider must provide the results of its analysis directly to OCSE at the same time it reports to the State.

(C) Consult with all stakeholders and assess the user involvement and buy-in regarding system functionality and the system's ability to meet program needs.

(D) Conduct an analysis of past project performance sufficient to identify and make recommendations for improvement.

(E) Provide a risk management assessment and capacity planning services.

(F) Develop performance metrics which allow tracking project completion against milestones set by the State.

(iii) The RFP and contract for selecting the IV&V provider (or similar documents if IV&V services are provided by other State agencies) must include the experience and skills of the key personnel proposed for the IV&V analysis and specify by name the key personnel who actually will work on the project and must be submitted to OCSE for prior approval.

* * * * *

§ 307.25 [Amended]

9. Section 307.25 is amended by replacing the citation ''§ 307.10'' with the citations ''§§ 307.10, or 307.11'' in the introductory text.

10. Section 307.30 is amended by revising paragraph (a) introductory text and paragraph (b) to read as follows:

* * * * *

(a) *Conditions that must be met for FFP.* During Federal fiscal years 1996, and 1997, Federal financial participation is available at the 90 percent rate in expenditures for the planning, design, development, installation or enhancement of a computerized support enforcement system as described in §§ 307.5 and 307.10 of this chapter limited to the amount in an advance planning document, or APDU submitted on or before September 30, 1995, and approved by OCSE if:

* * * * *

(b) *Federal financial participation in the costs of hardware and proprietary software.* (1) Until September 30, 1997, FFP at the 90 percent rate is available in expenditures for the rental or purchase of hardware for the planning, design, development, installation or enhancement of a computerized support enforcement system as described in § 307.10 in accordance with the limitation in paragraph (a) of this section.

(2) Until September 30, 1997, FFP at the 90 percent rate is available for expenditures for the rental or purchase of proprietary operating/vendor software necessary for the operation of hardware during the planning, design, development, installation or enhancement of a computerized support enforcement system in accordance with the limitation in paragraph (a) of this section, and the OCSE guideline entitled ''Automated Systems for Child Support Enforcement: A Guide for States.'' FFP at the 90 percent rate is not available for proprietary application software developed specifically for a computerized support enforcement system. (See § 307.35 of this part regarding reimbursement at the applicable matching rate.)

* * * * *

§ 307.35 [Amended]

11. Section 307.35 is amended by replacing the citation ''§ 307.10'' with the citations ''§§ 307.10, or 307.11'' in paragraph (a).

§ 307.40 [Amended]

12. Section 307.40 is amended by replacing the citation ''§ 307.10'' with the citations ''§§ 307.10, or 307.11'' in paragraph (a).

[FR Doc. 98–7714 Filed 3–24–98; 8:45 am]

BILLING CODE 4150–04–P

DEPARTMENT OF THE INTERIOR

Fish and Wildlife Service

50 CFR Part 17

RIN 1018–AE38

Endangered and Threatened Wildlife and Plants; Notice of Public Hearings and Reopening of Comment Period on Proposed Rule to List the Flatwoods Salamander as Threatened

AGENCY: Fish and Wildlife Service, Interior.

ACTION: Proposed rule; notice of public hearings and reopening of comment period.

SUMMARY: The Fish and Wildlife Service (Service), pursuant to the Endangered Species Act of 1973 (Act), as amended, gives notice that two public hearings will be held on its proposal to list the flatwoods salamander (*Ambystoma cingulatum*) as a threatened species. The Service also announces the reopening of the comment period for this action. The public hearings and the reopening of the comment period will allow additional comments on this proposal to be submitted from all interested parties.

DATES: The first public hearing will be held from 7 to 10 p.m. on April 14, 1998, in Savannah, Georgia. The second public hearing will be held on the evening of April 15, 1998, from 7 to 10 p.m. in Tallahassee, Florida. The comment period on the proposal, which originally closed on February 17, 1998, is now reopened until June 1, 1998. Any comments received by the closing date will be considered in the final decision on this proposal.

ADDRESSES: The April 14 public hearing will be held in the Auditorium at the Savannah Technical Institute, 5717 White Bluff Road, Savannah, Georgia. The April 15 public hearing will be at the Hermitage Centre, Hermitage Room, 1801 Hermitage Boulevard, Tallahassee, Florida. Written comments and materials concerning the proposal may be submitted at the hearing or sent directly to the Field Supervisor, U.S. Fish and Wildlife Service, 6578 Dogwood View Parkway, Jackson, Mississippi 39213. Comments and materials received will be available for public inspection, by appointment, during normal business hours at the above address.

FOR FURTHER INFORMATION CONTACT: Cary Norquist at the above address (601/965–4900, ext. 28; facsimile 601/965–4340).

SUPPLEMENTARY INFORMATION:

Background

The flatwoods salamander occurs in isolated populations in open, moist, longleaf/slash pine flatwoods across the lower southeastern Coastal Plain in Florida, Georgia, and South Carolina. Habitat loss and degradation from agriculture, urbanization, and certain silvicultural practices are the primary threats to the species. On December 16, 1997, the Service published a rule proposing threatened status for the flatwoods salamander in the **Federal Register** (62 FR 65787–65794). Section 4(b)(5)(E) of the Act requires that a public hearing be held if it is requested within 45 days of the publication of the proposed rule. Public hearing requests were received within the allotted time period from Rayonier (Southeast Forest Resources) and the Florida Forestry Association in Florida; Georgia-Pacific and Gilman Paper Company in Georgia; and the American Forest & Paper Association in Washington, DC.

The Service has scheduled these hearings for 7 to 10 p.m. on April 14, 1998, in Savannah, Georgia, and 7 to 10 p.m. on April 15, 1998, in Tallahassee, Florida. Anyone expecting to make an oral presentation at these hearings is encouraged to provide a written copy of their statement to the hearing officer prior to the start of the hearing. In the event there is a large attendance, the time allotted for oral statements may have to be limited. Oral and written statements receive equal consideration.

There are no limits to the length of written comments presented at these hearings or mailed to the Service. Legal notices announcing the date, time, and location of the hearings are being published in newspapers concurrently with this **Federal Register** notice.

The comment period on the proposal initially closed on February 17, 1998. To accommodate the hearing, the public comment period is now reopened. Written comments may be submitted until June 1, 1998, to the Field Supervisor (see **ADDRESSES** section).

Author: The primary author of this document is Cary Norquist (see **ADDRESSES** section).

Authority: The authority for this action is the Endangered Species Act of 1973 (16 U.S.C. 1531 *et seq.*).

Dated: March 18, 1998.

Judy L. Jones,

Acting Regional Director, Region 4, Fish and Wildlife Service.

[FR Doc. 98–7695 Filed 3–24–98; 8:45 am]

BILLING CODE 4310–55–U

DEPARTMENT OF THE INTERIOR

Fish and Wildlife Service

50 CFR Part 20

RIN 1018–AD74

Migratory Bird Hunting: Regulations Regarding Baiting and Baited Areas

AGENCY: Fish and Wildlife Service, Interior.

ACTION: Proposed rule.

SUMMARY: The Service proposes to clarify and simplify the migratory game bird hunting regulations regarding baiting. The Service is proposing these changes after an extensive review of the current regulations and in response to public concern about interpretation and clarity of the current regulations, especially with respect to current migratory bird habitat conservation practices (i.e., moist-soil management).

The Service proposes new regulatory language for: Accidental scattering of agricultural crops or natural vegetation incidental to hunting, normal agricultural and soil stabilization practices, baited areas, baiting, manipulation, natural vegetation, and top-sowing of seeds. Proposed changes include new guidance with respect to hunting over natural vegetation that has been manipulated.

The Service invites public comment on this proposed rulemaking and will carefully review and consider all comments received prior to any final rulemaking.

DATES: Comments on this proposed rulemaking must be received by May 26, 1998.

ADDRESSES: Comments regarding this proposed rulemaking should be addressed to: Director, U.S. Fish and Wildlife Service, Post Office Box 3247, Arlington, Virginia 22203–3247. Comments may be hand delivered to 4401 North Fairfax Drive, Suite 500, Arlington, Virginia 22203. The public may inspect comments during normal business hours at 4401 North Fairfax Drive, Suite 500, Arlington, Virginia 22203.

FOR FURTHER INFORMATION CONTACT: Kevin Adams, Chief, Division of Law Enforcement, telephone 703/358–1949, or Paul Schmidt, Chief, Office of Migratory Bird Management, telephone 703/358–1714.

SUPPLEMENTARY INFORMATION:

Background

The Fish and Wildlife Service (Service) has authority (16 U.S.C. 703–712 and 16 U.S.C. 742a–j) to regulate activities involving the hunting and other taking of migratory game birds. The Service has promulgated regulations (50 CFR part 20) for the hunting of migratory game birds that includes sections for *Methods of Take* and *Definitions of Terms*.

First established in 1935, the migratory game bird hunting regulations have been substantially modified over the last 60 years to allow more effective management of migratory game bird populations and to respond to public concerns. The Service last modified the portion of the regulations specific to baiting and hunting over baited areas [50 CFR 20.21(i)] in 1973.

The Service has recently received comments from various State wildlife management agencies, the general public, hunters, and conservation organizations to the effect that the baiting regulations are outdated, unclear, and difficult for the general public to interpret and understand. While the Service is attempting to simplify and clarify the regulations in this proposed rulemaking, the Service must also ensure that any proposed changes will both provide continued control over unlawful baiting activities and encourage habitat conservation and management for the benefit of migratory birds.

In 1991, the Service published its intent to review multiple wildlife regulations, including the regulations covering migratory birds, in a **Federal Register** notice dated November 14, 1991 (56 FR 57872). Subsequently, in a **Federal Register** notice dated December 1, 1993 (58 FR 63488), the Service published its intent to further review the migratory bird regulations in 50 CFR parts 20 and 21, subpart D. On March 22, 1996, the Service announced its intent in the **Federal Register** (61 FR 11805) to review the migratory bird hunting regulations specific to waterfowl baiting separately from review of other portions of the regulations pending Service assessment of the moist-soil management aspect (manipulation of natural vegetation). However, the Service has recently decided that in order to achieve the necessary clarity and simplicity in the current regulations, it should review the baiting regulations for all migratory game birds, not just waterfowl. All of the public comments received by the Service in response to the prior **Federal Register** notices have been carefully considered during development of this proposed rule.

In addition to the **Federal Register** notices detailed above inviting public comments, on March 22, 1996, the Service requested the International Association of Fish and Wildlife Agencies (International) to review waterfowl baiting issues involving moist-soil management and make recommendations to the Service. In developing its recommendations, the Service suggested that the International would likely need a working group that represented a broad range of use interests. In May 1997, the International submitted comments to the Service that have been reviewed and considered during development of this proposed rule.

Overview of Proposed Changes

The Service proposes to add new definitions to 50 CFR 20.11, *Meaning of Terms*, for the following terms: *baited area*, *baiting*, *manipulation*, *natural vegetation*, and *normal agricultural and soil stabilization practice*. The purpose of these additions to section 20.11 is to provide a base of reference for terminology used in the regulation and to remove perceived ambiguity about what the Service means when using a particular term. For simplification of the regulations, the Service also proposes to add new language to section 20.21(i), *Methods of Take*, regarding baited areas and baiting.

The Service is proposing new regulatory language to address situations involving the accidental scattering of grains or seeds from agricultural crops or natural vegetation incidental to a migratory game bird hunter's activities. Specific concerns include entering or exiting hunting areas, placing decoys, retrieving downed birds, and using natural vegetation to camouflage blinds.

Current exemptions allow for the hunting of migratory game birds over agricultural lands, and separate those practices allowed for the hunting of waterfowl from those allowed for the hunting of other migratory game birds, such as doves. In this rule, the Service proposes to consolidate the different practices into one term *normal agricultural and soil stabilization practice* that is intended to apply to the hunting of all migratory game birds. The Service is not proposing to change the current exemption in the regulation that allows the hunting of migratory game birds, except waterfowl, over wildlife management food plots that have been manipulated. However, in addition to the words *except waterfowl*, the Service is proposing to exclude cranes as well by changing the language to read *except waterfowl and cranes*.''

The Service is proposing a new prohibition that would apply to the hunting of all migratory game birds over any area that has been planted by means of top sowing (including aerial application) where seeds remain on the surface of the ground as a result. The Service is proposing that this prohibition apply regardless of the purpose of the seeding, and proposes to explicitly exclude top sowing from the proposed definition of *normal agricultural and soil stabilization practice*.

The Service has long supported and encouraged the use of moist-soil management to benefit wildlife by providing important food and habitat. While the Service believes it is very important to continue encouragement of this valuable practice on both public and private lands, clear guidance on what constitutes baiting should accompany this encouragement. Currently, hunting over manipulated moist soil areas could be considered illegal since seeds can be made available to waterfowl as a result of a manipulation. To address moist-soil management issues, the Service proposes to distinguish between those moist-soil practices that will constitute baiting for migratory birds and those that will not. The Service is proposing to provide for the hunting of waterfowl and cranes over natural vegetation that has been manipulated, provided that the manipulations are conducted within specified parameters. The hunting of migratory game birds other than waterfowl and cranes will not be restricted as a result of any such manipulation.

As a related issue, the Service is proposing specific regulatory changes dealing with millet species. Millet, which is easily and readily naturalized, is somewhat unique in that it has applications for both agricultural and wildlife management (i.e., moist-soil management) purposes. After careful consideration and review, the Service has decided to include millet species in its proposed definition of natural vegetation.

Violations of the Migratory Bird Treaty Act constitute criminal offenses and because of this, since 1916 the MBTA has provided significant protection to migratory birds. Enforcement of its regulations includes application of a ''strict liability'' doctrine. Under strict liability, the fact that a person acted in such a way as to cause a prohibited result is sufficient basis to impose liability. Thus, in the prosecution of a strict liability crime, the government need not prove ''scienter'' (that the accused knew that he or she was violating the law) or even that the accused should have known he or she was violating the law.

In 1978, the Fifth Circuit Court of Appeals took exception to the strict liability standard in the judicial decision *U.S.* v. *Delahoussaye*, 572 F.2d 910 (5th Cir. 1978). In this decision, the court found that a hunter must make a determination prior to hunting about the legality of a hunting area and the presence or absence of any bait, and a law enforcement officer must show that a hunter knew or should have known about any bait. In 1993, in the Fifth Circuit judicial decision *U.S.* v. *Garrett* (5th Cir. 1993, No. 92–3483), the court revisited *Delahoussaye* and found evidence that it was, in fact, contrary to the intent of a subsequent Congress.

Other Federal courts have repeatedly upheld application of the strict liability doctrine. In *U.S.* v. *Schultz*, 28 F. Supp. 234 (W.D. Kentucky 1939), the court stated: ''The beneficial purpose of the treaty and the act would be largely nullified if it was necessary on the part of the government to prove the existence of scienter on the part of defendants accused of violating the provisions of the act.'' In *Holdridge* v. *United States*, 282 F.2d 302 (8th Cir. 1960), the court stated that strict liability was utilized to ''enact the broad policy of protecting an important natural resource, migratory game birds.'' In *U.S.* v. *Miller*, unpublished (D. Ariz. 1982), the court stated: ''The importance of the goal of preserving certain migratory birds in our environment, the difficulty the government would have in enforcing its laws if it were required to prove scienter * * * and the contemplated leniency of the sentence need all be considered.'' In written testimony to the United States Congress in 1984, Judge Frederic Smalkin, District of Maryland, wrote: ''In addition to being a shield for the innocent, such a requirement [to prove scienter] could be a windfall for the guilty, in view of the difficulty of proving scienter beyond a reasonable doubt * * *. The requirement of proving scienter would effectively curtail enforcement of the prohibition of baiting.'' These are provided as mere samples of a strong foundation of existing case law that supports application of the strict liability doctrine.

At this time, no changes are proposed in the application of strict liability to the migratory game bird baiting regulations. However, the Service recognizes that the application of the strict liability standard to the baiting regulations is of concern to many hunters. Unlike other Federal wildlife laws that provide for both criminal and civil remedies, the Migratory Bird Treaty Act is limited to criminal penalties. The Service invites comments that identify alternatives to the existing penalty provisions dealing with these regulations.

The Service is the principal Federal agency responsible for conserving, protecting, and enhancing fish and wildlife and their habitats for the continuing benefit of all American people. As such, the Service must give due regard not only to the interests of migratory bird hunters but to the interests of all groups. Any other action would conflict with the Service's ability to be fair, impartial, and equitable in accomplishing its mission, and would serve to undermine enforcement efforts and negatively impact migratory birds and their habitat. For example, the doctrine of strict liability applies equally to hunters, who enjoy the privilege of hunting migratory game birds, and to industrial and agricultural entities, whose combined actions create the potential for far-reaching impact on migratory birds and their habitat.

Awareness of the strict liability standard has been important in initiating changes in agricultural and industrial practices to protect migratory birds. For example, the chemical industry has made changes in the manufacture and use of pesticides that are toxic and deadly to migratory birds. In order to comply with the strict liability standard, the electric power industry has taken steps to prevent electrocution and power line strikes to migratory birds; the agriculture community modifies farming practices to prevent the accidental loss of migratory birds due to pesticide poisonings; the petroleum and mining industries have implemented measures to prevent contamination to migratory

birds at petroleum pits, open oil pits, and cyanide leach operations; the commercial aquaculture industry modifies its operations to reduce bird mortality; and developers monitor construction sites to avoid destruction to migratory birds, their habitat, nests, and young.

The strict liability doctrine has long been recognized in Federal courts throughout the Nation as a reasonable and necessary element in protecting the Nation's valuable migratory bird resource. The Supreme Court discussed the necessity for application of the strict liability doctrine in ''public welfare offenses,'' such as violations of the migratory bird regulations, finding that since an injury is the same no matter the intent of the violator, intent is not specified as a necessary element of the offense [see *Morissette* v. *United States*, 342 U.S. 246 (1952)].

Overview—Description of Proposed Regulations Accidental Distribution and Scattering of Grains or Seeds Incidental to Hunting

While the Service does not believe that the accidental distribution and scattering of grains or seeds occurring incidental to migratory game bird hunting has been an enforcement problem in the past, the proposed regulation addresses concerns and provides clarity to law enforcement officers and hunters alike. Therefore, areas where grains or seeds from agricultural crops or natural vegetation have been accidentally scattered as a result of hunters entering or exiting areas, placing decoys, or retrieving downed birds will not be considered baited areas.

Natural vegetation

North America has lost many of its original wetlands in the last 200 years. Dahl (1990) estimates that 22 States have lost over 50%, and 11 States have lost over 70%, of their original wetlands. Overall, about 53% of the original wetlands in the lower 48 States have been lost (Dahl and Johnson, 1991). In many of the remaining wetlands, large-scale land-use changes have often altered the natural water regime to the point that many wetlands are no longer functional. The Service believes that one of the most important factors affecting waterfowl and other migratory bird populations is the amount and availability of quality habitat.

Because of the extensive loss and alteration of wetlands, managers have intensively managed remaining wetland areas to maximize their value to wildlife, especially migratory birds, through moist-soil management. Moist-soil management, or the management of man-made, seasonally flooded impoundments, is a technique that uses manipulation of soil, water, and vegetation to enhance habitat for migratory birds. Modern moist-soil management includes water level manipulation, mowing, burning, and other practices to: (1) Encourage production of moist soil plants for use by wildlife; (2) promote the production of invertebrate and vertebrate food sources; (3) control undesirable plants; and (4) increase biological diversity. Moist-soil plants provide essential nutritional requirements, consistently produce more pounds and diversity of food per acre than agricultural crops, provide seed that are more nutritionally complete and resistant to decay when flooded (providing longer and more constant use by waterfowl), and are more economical and efficient to manage than agricultural crops.

To address moist-soil management issues, the Service is proposing several regulatory changes to ensure that this valuable wildlife management practice continues to be encouraged while also clarifying what constitutes baiting. The proposed regulations provide several new definitions and parameters that attempt to make it clear to the public how natural vegetation may be manipulated for moist-soil management purposes and subsequently hunted over.

The Service proposes to define *natural vegetation* as *any non-agricultural, native, or naturalized plant species, including millet, that grows at a site in response to planting or from existing seeds or other propagules.* This definition is not intended to include plants grown as agricultural crops.

In determining how any proposed regulatory changes should deal with millet, the Service recognizes that millet species have both agricultural and moist-soil management purposes. Millet is readily naturalized and can be an important food source for migrating and wintering waterfowl. Because of these valuable wildlife management traits, the Service believes that the potential benefits justify including millet in the proposed definition of *natural vegetation*. Therefore, the Service is proposing to treat millet species separately from agricultural crops and include millet in the proposed definition for *natural vegetation*.

Manipulation

Because the term is an important component of the proposed regulation, the Service is proposing to add a new definition for *manipulation*. The proposed definition for manipulation is *mowing, shredding, discing, rolling, chopping, trampling, flattening, or wetland-associated plant propagation techniques.* The term manipulation will not include the distributing or scattering of grain, salt, or other feed once it has been removed from or stored on the field where grown. The Service intends that the proposed definition for manipulation apply both to natural vegetation and agricultural crops.

Manipulation of Natural Vegetation

The Service recognizes that the artificial maintenance and restoration of natural vegetation through moist-soil management often creates important habitat for waterfowl and other migratory bird species. The Service intends that any proposed changes to the regulations regarding natural vegetation should be readily understood, enforceable, and provide flexibility for habitat managers to perform wildlife management practices beneficial to breeding, migrating, and wintering migratory birds.

The Service acknowledges that the current regulations were not intended to prevent the manipulation of naturally vegetated areas or to discourage moist-soil management practices of benefit to migratory birds. However, the Service recognizes that there appears to be some disagreement over the interpretation of the current regulations regarding moist-soil management, and that this disagreement could potentially discourage the maintenance and/or restoration of wetland areas. Therefore, the Service is proposing to expressly provide for the hunting of waterfowl and cranes in areas where natural vegetation, including millet, has been manipulated in accordance with certain restrictions. The Service is proposing no restrictions on the manipulation of natural vegetation when hunting migratory game birds other than waterfowl and cranes.

Several commenters pointed out that in wetland situations under ideal conditions some improved varieties of natural vegetation can outproduce their wild counterparts. While seed retention rarely rivals that of agricultural crops, seeds from natural vegetation can persist in the environment for long periods of time after the manipulation of such plants. In recognition of this difference, some recommended that certain wetland plants that have been planted (as opposed to grown naturally), could not be hunted over for 10 days following any alteration (i.e., manipulation). While the Service agrees that some time restriction is necessary (for the reasons outlined above), the Service also believes that any change in

the regulations should be clear, consistent, enforceable, and easily understood by the public. Thus, the Service is proposing to treat all natural vegetation, whether or not it is planted, in the same manner.

The Service is proposing that any natural vegetation may be manipulated and subsequently hunted over, provided that: (1) The manipulation must be completed 10 days prior to any waterfowl season, and (2) the manipulation is not done during any open waterfowl season. The Service believes that this proposed change will accomplish several objectives. First, it provides for the manipulation of planted natural vegetation areas (i.e., moist-soil management areas) while also allowing subsequent hunting. Second, it provides the public with a clear, specific cut-off date for legal manipulation of such areas, if such areas are to be hunted. Third, it provides multiple opportunities to manipulate the same area during the fall and winter. This is especially important in those areas where there may be long breaks in between waterfowl seasons, such as a September teal season and the regular waterfowl season. Fourth, it provides law enforcement with clear time periods when manipulations are not allowable if such areas are to be hunted. And finally, it does not require a determination of whether the area has been planted or naturally grown, and does not have different requirements for different plant species.

Normal Agricultural and Soil Stabilization Practice

In response to public concerns about the need for greater clarity and consistency when interpreting the regulation covering those agricultural practices that are and are not allowed when hunting migratory game birds, the Service is proposing new regulatory language. The proposed new term to apply to all agricultural activities is *normal agricultural and soil stabilization practice*. This proposed term would replace the agricultural terms in the current regulations (i.e., *normal agricultural planting and harvesting* for waterfowl hunting, and *bona fide agricultural operations* for the hunting of other migratory game birds, such as doves). In addition, the proposed new term would add language to allow post-harvest manipulation activities (such as discing or mowing stubble after harvest and removal of grain) and soil stabilization practices. The proposed term, like the terms it replaces, is intended to apply to the hunting of all migratory game birds over agricultural fields.

In the new definition of *normal agricultural and soil stabilization practice*, the Service is proposing to include specific language providing for the Service to rely upon recommendations by the U.S. Department of Agriculture (USDA) for determinations with respect to planting, harvesting, post-harvest manipulation, and soil stabilization practices. This proposed language will codify current Service policy, and provide the public with a reliable and consistent source of guidance when making determinations about the legality of hunting in agricultural areas. Each year, USDA State specialists, through the cooperative agricultural extension services, make agricultural recommendations that are readily available to farmers, landowners, and the general public. By codifying the role of the USDA, the Service proposes to recognize USDA's State specialists across the United States as an authority on agricultural matters. Since 1980, the Service has relied upon these specialists for assistance with questions on agricultural practices.

Some commenters suggested that the term *normal* used in the current regulations was too vague and that the term *accepted* was a more accurate representation when referring to agricultural operations and procedures. While the final responsibility for determining the conditions by which migratory birds may be harvested remains with the Service, this new definition that relies on recommendations and determinations of USDA State specialists can provide the public with clear and concise direction for obtaining guidance on agricultural practices and their compatibility with migratory game bird hunting.

Baiting

The Service is proposing to add a new definition for baiting to the *Meaning of Terms* section of the regulation. The term *baiting* will be defined as *the direct or indirect placing, exposing, depositing, distributing, or scattering (other than by controlling flooding or water levels) of salt, grain, or other feed capable of attracting migratory game birds that could serve as a lure or an attraction to, on, or over any areas where hunters are attempting to take them*. This definition differs from the language in the *Hunting Methods* section of the current regulation only in that it is shorter and more concise. The current wording *shelled, shucked, unshucked corn wheat or other grain, salt, or other feed* will become *salt, grain, or other feed*. In addition, the language in the current regulation *so as to constitute for such birds a lure, attraction or enticement to* is proposed to be shortened by elimination of the word *enticement* and replacement of the words *so as to* with *that could*. Finally, the proposed definition clarifies that the controlling of flooding and water levels does not constitute baiting.

Baited Area, Top-Sown Seeds

To ensure compliance with the baiting laws, the current regulation requires hunters, landowners, or law enforcement officers to determine whether a hunting area has been subjected to a normal agricultural planting or harvesting, bona fide agricultural operation, or wildlife management practice. When assessing the legality of a hunting situation, the Service recognizes that, at times, it may be difficult to properly determine if a top-sown area has been planted as a normal agricultural planting or has been planted to lure migratory game birds to hunters illegally attempting to take them. Therefore, the Service is proposing to prohibit the taking of all migratory game birds over any lands where planting by top sowing of seeds (including aerial seeding) has occurred where seeds remain on the surface of the ground as a result. Any such area will be considered baited and will remain so for ten days following complete removal of all seeds from the surface of the land. The Service believes that this prohibition will allow hunters and others to more easily and readily determine the legality of a hunting area.

Hunting of Doves and Pigeons

This proposed rule directly affects the hunting of all migratory game birds, including doves and pigeons, with respect to the proposed prohibition on hunting over any top-sown area (see *top-sown seeds* discussion above). The Service is not proposing any change to the current exemption that allows hunting of migratory game birds, other than waterfowl and cranes, over agricultural crops that have been manipulated for wildlife management purposes. Further, the proposed definition for the term *manipulation* is intended to apply to both natural vegetation and agricultural crops.

Hunting of all Migratory Game Birds

This proposed rule maintains the current prohibition on hunting any migratory game bird over any areas where the placing, exposing, depositing, distributing, or scattering of grains, salt, or other feed has occurred once they are removed from or stored on the field where grown. This proposed rule would continue to allow the hunting of all

migratory game birds over an agricultural field that has been planted or harvested in a normal manner, in accordance with the proposed definition for *normal agricultural and soil stabilization practice.*

The Service is proposing to maintain the current *ten-day rule* with respect to baiting and baited areas. The ten-day rule considers an area baited for ten days following complete removal of any salt, grain, or other feed that is capable of luring or attracting migratory game birds to, on, or over areas where hunters are attempting to take them.

Required Determinations

Paperwork Reduction Act of 1995 (Pub. L. 104–13)

The Service has examined this proposed rule under the Paperwork Reduction Act of 1995 and has found it to contain no information collection requirements for which Office of Management and Budget review is required.

Unfunded Mandates Reform Act of 1995 (Pub. L. 104–4) and Unfunded Mandates (Executive Order 12875)

There are no credible scenarios in which this proposed rule could result in a significant annual effect on the economy of $100 million or more. The U.S. Department of Agriculture independently accomplishes the publishing, distributing, and periodically updating of its agricultural determinations, and this is the only identifiable cost associated with this proposed rule. Likewise, there are no foreseen significant adverse effects on the economy. Therefore, the Service has determined and certified pursuant to the Unfunded Mandates Reform Act, 2 U.S.C. 1502 *et seq.*, that this rulemaking will not impose a cost of $100 million or more in any given year on local or State governments or private entities.

Economic Effects (Excecutive Order 12866)

This proposed rule is a wide-ranging update to the current regulations governing migratory game bird hunting. The changes clarify definitions and simplify language, thereby benefitting both law enforcement officers and the hunting public by improving the efficiency of enforcement and protection to migratory bird resources. This proposed rule is not subject to Office of Management and Budget review under Executive Order 12866.

Endangered Species Act Considerations

Section 7 of the Endangered Species Act (ESA) of 1972, as amended (16 U.S.C. 1538 *et seq.*) provides that Federal agencies shall ''insure that any action authorized, funded or carried out * * * is not likely to jeopardize the continued existence of any endangered species or threatened species or result in the destruction or adverse modification of (critical) habitat * * *'' The Service has initiated a Section 7 consultation under the ESA for this proposed rule. The result of the Service's consultation under Section 7 of the ESA will be available to the public at the location indicated under the **ADDRESSES** caption.

Regulatory Flexibility Act Determination (5 U.S.C. 601)

This proposed rule will make minor changes in the existing basic regulation for migratory game bird hunting and will have no significant effect on small entities. No dislocation or other local effects, with regard to hunters and others, are likely to occur. The proposed changes in this rule are intended to provide clarity, simplify methods whereby migratory game birds may be taken, and add new definitions for terms used in part 20. The Service will rely upon State specialists of the U.S. Department of Agriculture for determinations on normal agricultural and soil stabilization practices when questions arise. Accordingly, Service review of this rulemaking under the Regulatory Flexibility Act of 1980 (5 U.S.C. 601 *et seq.*) has revealed that it will not have a significant effect on a substantial number of small entities, which includes small businesses, organizations and small government jurisdictions.

Civil Justice Reform (Executive Order 12988)

The Department, in promulgating this proposed rule, has determined that these regulations meet the applicable standards provided in Section 3(a) and 3(b)(2) of Executive Order 12988.

Environmental Effects (National Environmental Policy Act—42 U.S.C. 4321 et seq.)

The Service has determined that National Environmental Policy Act documentation is not required because the proposed rule qualifies as a categorical exclusion under the Department of the Interior's NEPA procedures in 516 DM 2, Appendix 1.10.

List of Subjects in 50 CFR Part 20

Exports, Hunting, Imports, Reporting and recordkeeping requirements, Transportation, Wildlife.

Regulation Promulgation

For the reasons set out in the preamble, the Service proposes to amend Title 50, Chapter I, subchapter B of the Code of Federal Regulations as set forth below:

PART 20—MIGRATORY BIRD HUNTING

1. The authority citation for part 20 continues to read as follows:

Authority: 16 U.S.C. 703–712, 16 U.S.C. 742a-j.

2. Revise section 20.11 by adding new paragraphs (g), (h), (i), (j), and (k) to read as follows:

§ 20.11 Meaning of terms.

* * * * *

(g) *Normal agricultural and soil stabilization practice* means planting, harvesting, and post-harvest manipulation and soil stabilization practices as recommended by State specialists of the cooperative extension service of the U.S. Department of Agriculture, except that for the purposes of this part planting by means of top sowing (including aerial seeding) is not to be considered a normal agricultural or soil stabilization practice.

(h) *Baited area* means any area containing salt, grain, or other feed capable of attracting migratory game birds that is placed, exposed, deposited, distributed, or scattered (other than controlling of flooding or water levels) that could serve as a lure or attraction for such birds to, on, or over areas where hunters are attempting to take them. Such areas will remain a baited area for ten days following complete removal of all such salt, grain, or other feed.

(i) *Baiting* means direct or indirect placing, exposing, depositing, distributing, or scattering (other than by controlling of flooding or water levels) of salt, grain, or other feed capable of attracting migratory game birds that could serve as a lure or attraction to, on, or over any areas where hunters are attempting to take them.

(j) *Manipulation* means mowing, shredding, discing, rolling, chopping, trampling, flattening, or wetland-associated plant propagation techniques with respect to natural vegetation and agricultural crops. The term *manipulation* does not include the distributing or scattering of grain or other feed once it has been removed from or stored on the field where grown.

(k) *Natural vegetation* means any non-agricultural, native, or naturalized plant species, including millet, that grows at a site in response to planting or from existing seeds or other propagules.

3. Amend § 20.21 by revising paragraph (i) to read as follows:

§ 20.21 Hunting methods

* * * * *

(i) By the aid of baiting or on or over any baited area. However, nothing in this paragraph shall prohibit:

(1) The taking of all migratory game birds on or over areas where grains or seeds from agricultural crops or natural vegetation have been accidentally scattered incidental to hunters entering or exiting areas, placing decoys, or retrieving downed birds.

(2) The taking of all migratory game birds on or over standing crops, flooded standing crops (including aquatics), flooded harvested croplands, grain crops properly shocked on the field where grown, or grains found scattered solely as the result of a normal agricultural and soil stabilization practice;

(3) The taking of migratory game birds, except waterfowl and cranes, on or over any lands or areas where salt, grain, or other feed has been distributed or scattered as a result of manipulation of an agricultural crop or other feed on the land where grown for wildlife management purposes, or as a result of manipulation of natural vegetation;

(4) The taking of waterfowl and cranes on or over natural vegetation that has been manipulated; *Provided that* the manipulation does not occur: (a) Less than 10 days before any waterfowl season opening, or (b) during any open waterfowl season in that area; Except that for the purposes of this paragraph (3), waterfowl season does not include special sea duck seasons or tribally-ceded land seasons;

(5) The taking of all migratory game birds from a blind or other place of concealment camouflaged with natural vegetation;

* * * * *

Dated: February 17, 1998.

William Leary,

Acting Deputy Assistant Secretary for Fish and Wildlife and Parks.

[FR Doc. 98–7686 Filed 3–19–98; 5:04 pm]

BILLING CODE 4310–55–P

Notices

Federal Register
Vol. 63, No. 57
Wednesday, March 25, 1998

This section of the FEDERAL REGISTER contains documents other than rules or proposed rules that are applicable to the public. Notices of hearings and investigations, committee meetings, agency decisions and rulings, delegations of authority, filing of petitions and applications and agency statements of organization and functions are examples of documents appearing in this section.

DEPARTMENT OF AGRICULTURE

Food and Nutrition Service

Agency Information Collection: Proposed Collection; Comment Request; FNS–260, Acquisition for Food Coupon Books

AGENCY: Food and Nutrition Service, USDA.

ACTION: Notice.

SUMMARY: In accordance with the Paperwork Reduction Act of 1995, this notice invites the general public and other public agencies to comment on proposed information collection contained in form FCS–260, Requisition for Food Coupon Books.

DATES: Written comments must be submitted on or before May 26, 1998.

ADDRESSES: Send comments and requests for copies of this information collection to: Suzanne Fecteau, Branch Chief, Redemption Management Branch, Food and Nutrition Service, U.S. Department of Agriculture, 3101 Park Center Drive, Alexandria, VA 22302.

Comments are invited on: (a) Whether the proposed collection of information is necessary for the proper performance of the functions of the agency, including whether the information will have practical utility; (b) the accuracy of the agency's estimate of the burden of the proposed collection of information, including the validity of the methodology and assumptions used; (c) ways to enhance the quality, utility, and clarity of the information to be collected; and (d) ways to minimize the burden of the collections of information on those who are to respond, including through the use of appropriate automated, electronic, mechanical, or other technological collection techniques or other forms of information technology.

All responses to this notice will be summarized and included in the request for OMB approval. All comments will also become a matter of public record.

FOR FURTHER INFORMATION CONTACT: Suzanne Fecteau, (703) 305–2418.

SUPPLEMENTARY INFORMATION:

Title: Acquisition for Food Coupon Books.

OMB Number: 0584–0022.

Form Number: FCS–260.

Expiration Date: 08/31/98.

Type of Request: Revision of a currently approved collection.

Abstract: Section 7(e) of the Food Stamp Act of 1977, as amended, (the Act) (7 U.S.C. 2016(e)) requires the U.S. Department of Agriculture (USDA) to prescribe appropriate procedures for the delivery of food coupon books to coupon issuers. States and local agencies use Form FNS–260, Requisition of Food Coupon Books, to order supplies of coupon books. The forms are completed and submitted in hard copy or electronic format to the appropriate Food and Nutrition Service (FNS) regional office. The hard-copy format is normally used only when the electronic format is unavailable. The regional offices enter the order for coupon books into a database where it is automatically reviewed for conformance with policy for ordering. After the order passes the edit checks, FNS then transmits them electronically to the contractor who ships the coupon books. No coupon books are shipped until a completed order has been received and approved by FNS. The order of coupon books is essential to carrying out the policy of the Act of 1977.

The need to print and order food coupons as the sole benefit delivery instrument for the Food Stamp Program has changed. Many areas of the country have switched to Electronic Benefit Transfer (EBT) Systems and no longer issue food coupons to participating households. This has resulted in a direct reduction in the number of States and local agencies completing and submitting food coupon book orders. However, some areas are still using coupons and we must continue to require these areas to order food coupon books. The Office of Management and Budget's (OMB) approval of this information collection expires on August 31, 1998. We intend to seek an extension of OMB's approval for an additional 3 years.

The number of respondents that must complete and submit food coupon orders is estimated to be 1,000 annually; a reduction of 150 respondents. It is estimated that respondents will order coupons at least once every six months. It is further estimated that it takes about 30 minutes to complete and transmit the coupon book order. Thus, total annual burden associated with this information collection is estimated to be 3,000 hours annually ($1,000 \times 6 \times 30$ minutes).

It should be noted that current versions of this form reflect our agency name as the Food and Consumer Service and the form number as FCS–260. The form will be revised at the next opportunity to change the agency's name to the Food and Nutrition Service and the form number to FNS–260. The hard-copy version of the form will also be revised when the current supply is exhausted.

Affected Public: State and local governments.

Estimated Number of Respondents: 1,000.

Estimated Number of Responses per respondent: 6,000.

Estimated Time per Response: one half hour.

Estimated Total Annual Burden: 3,000 hours; a reduction of 450 annually.

Dated: March 16, 1998.

Yvette S. Jackson,

Administrator, Food and Nutrition Service.

[FR Doc. 98–7736 Filed 3–24–98; 8:45 am]

BILLING CODE 3410–30–M

DEPARTMENT OF COMMERCE

Submission for OMB Review; Comment Request

The Department of Commerce (DOC) has submitted to the Office of Management and Budget (OMB) for clearance the following proposal for collection of information under provisions of the Paperwork Reduction Act (44 U.S.C. Chapter 35).

Agency: Bureau of Export Administration (BXA).

Title: Survey of the U.S. High Performance Military Explosives and Components Sector to Assess the Current Status of Military-Grade Explosive R&D and Manufacturing in the United States.

Agency Form Number: N/A.

OMB Approval Number: None.

Type of Request: New collection of information.

Burden: 240 hours.

Average Time Per Response: 6 hours per response.

Number of Respondents: 40 respondents.

Needs and Uses: The information that will be collected by this survey is needed to complete an assessment of the current status of the U.S. high performance explosives and components sector in such areas as production methods, technological development, economic performance, and ability to meet future military requirements. This survey is being initiated at the request of the U.S. Navy's Naval Surface Warfare Centers. Information will be collected only on military-grade explosives and their components; no information will be gathered on commercially-available explosives for such applications as mining or demolition.

Affected Public: Individuals, businesses or other for-profit institutions.

Respondent's Obligation: Voluntary.

OMB Desk Officer: Dennis Marvich (202) 395–3122.

Copies of the above information collection proposal can be obtained by calling or writing Linda Engelmeier, DOC Forms Clearance Officer, (202) 482–3272, Department of Commerce, Room 5327, 14th and Constitution Avenue, NW, Washington, D.C. 20230.

Written comments and recommendations for the proposed information collection should be sent within 30 days of publication of this notice to Dennis Marvich, OMB Desk Officer, Room 10202, New Executive Office Building, Washington, D.C. 20230.

Dated: March 19, 1998.

Linda Engelmeier,

Departmental Forms Clearance Officer, Office of Management and Organization.

[FR Doc. 98–7703 Filed 3–24–98; 8:45 am]

BILLING CODE 3510–33–P

DEPARTMENT OF COMMERCE

Bureau of Export Administration

Digital Computer System Parameters

ACTION: Proposed collection; comment request.

SUMMARY: The Department of Commerce, as part of its continuing effort to reduce paperwork and respondent burden, invites the general public and other Federal agencies to take this opportunity to comment on proposed and/or continuing information collections, as required by the Paperwork Reduction Act of 1995, Public Law 104–13 (44 U.S.C. 3506(c)(2)(A)).

DATES: Written comments must be submitted on or before May 26, 1998.

ADDRESSES: Direct all written comments to Linda Engelmeier, Departmental Clearance Officer, Department of Commerce, Room 5327, 14th and Constitution Avenue, NW, Washington, DC 20230.

FOR FURTHER INFORMATION CONTACT: Requests for additional information or copies of the information collection instrument(s) and instructions should be directed to Dawn Battle, Department of Commerce, Bureau of Export Administration, 14th and Constitution Avenue, NW, Room 6877, Washington, DC 20230.

SUPPLEMENTARY INFORMATION:

I. Abstract

To export computers that perform above a certain level an export licenses is needed for certain locations. In support of this application, documentation must be provided on the computer system. When BXA receives this information it is thoroughly reviewed by a licensing officer who, depending on the limits of parameters of the system, may submit the application for review by other government agencies. If the application is approved, the respondent is issued a validated export license that authorizes shipment of the computer system. If additional information is required, the respondent will be notified. Applications may be rejected if it is determined that the export or reexport of the system poses a threat to the U.S. national security.

II. Method of Collection

Submitted, as required, with form BXA–748P.

III. Data

OMB Number: 0694–0013.

Form Number: N/A.

Type of Review: Regular submission for extension of a currently approved collection.

Affected Public: Individuals, businesses or other for-profit and not-for-profit institutions.

Estimated Number of Respondents: 80.

Estimated Time Per Response: 32 minutes per response.

Estimated Total Annual Burden Hours: 83.

Estimated Total Annual Cost: $0 (no capital expenditures are required).

IV. Request for Comments

Comments are invited on: (a) Whether the proposed collection of information is necessary for the proper performance of the functions of the agency, including whether the information shall have practical utility; (b) the accuracy of the agency's estimate of the burden (including hours and cost) of the proposed collection of information; (c) ways to enhance the quality, utility, and clarity of the information to be collected; and (d) ways to minimize the burden of the collection of information of respondents, including through the use of automated collection techniques or other forms of information technology.

Comments submitted in response to this notice will be summarized and/or included in the request for OMB approval of this information collection; they will also become a matter of public record.

Dated: March 19, 1998.

Linda Engelmeier,

Departmental Forms Clearance Officer, Office of Management and Organization.

[FR Doc. 98–7702 Filed 3–24–98; 8:45 am]

BILLING CODE 3510–DT–P

DEPARTMENT OF COMMERCE

International Trade Administration

[A–201–817]

Oil Country Tubular Goods from Mexico; Antidumping Duty Administrative Review; Extension of Time Limit

AGENCY: Import Administration, International Trade Administration, Department of Commerce.

ACTION: Notice of extension of time limit for preliminary determination in antidumping duty administrative review of oil country tubular from Mexico.

SUMMARY: The Department of Commerce (the Department) is extending the time limit for the preliminary results of the antidumping duty administrative review of Oil Country Tubular Goods from Mexico. This review covers the period August 1, 1996 through July 31, 1997.

EFFECTIVE DATE: March 25, 1998.

FOR FURTHER INFORMATION CONTACT: John Drury or Linda Ludwig, Office of AD/CVD Enforcement, Group III, Import Administration, International Trade Administration, U.S. Department of Commerce, 14th Street and Constitution Avenue, NW, Washington, DC 20230; telephone (202) 482–3208 or 482–3833, respectively.

SUPPLEMENTARY INFORMATION: It is not practicable to complete this review within the original time limit. The Department is extending the time limit for completion of the preliminary results until August 31, 1998, in accordance with Section 751(a)(3)(A) of the Trade and Tariff Act of 1930, as amended by the Uruguay Round Agreements Act of 1994 (19 U.S.C. 1675 (a)(3)(A)). See memorandum to Robert S. LaRussa from Joseph A. Spetrini regarding the extension of case deadline, dated March 18, 1998.

Dated: March 19, 1998.

Joseph A. Spetrini,

Deputy Assistant Secretary Enforcement Group III.

[FR Doc. 98–7803 Filed 3–24–98; 8:45 am]

BILLING CODE 3510–DS–M

DEPARTMENT OF COMMERCE

[C–549–806]

Steel Wire Rope from Thailand; Revocation of Countervailing Duty Order

AGENCY: Import Administration, International Trade Administration, Department of Commerce.

ACTION: Notice of revocation of countervailing duty order: Steel wire rope from Thailand.

SUMMARY: Pursuant to section 753(b)(4) of the Tariff Act of 1930, as amended (the Act), the United States International Trade Commission has issued a negative injury determination with respect to the countervailing duty order on steel wire rope from Thailand (63 FR 5816; February 4, 1998). Therefore, pursuant to section 753(b)(3)(B) of the Act, the Department of Commerce is notifying the public of its revocation of the countervailing duty order on steel wire rope from Thailand.

EFFECTIVE DATE: March 25, 1998.

FOR FURTHER INFORMATION CONTACT: Maria MacKay or Constance Cunningham, Office of CVD/AD Enforcement VI, Import Administration, International Trade Administration. U.S. Department of Commerce, 14th Street and Constitution Avenue, N.W., Washington, D.C. 20230; telephone: (202) 482–2786.

SUPPLEMENTARY INFORMATION:

Background

On May 26, 1995, the Department of Commerce (the Department) published a notice in the **Federal Register** which informed domestic interested parties of their right under section 753(a) of the Act to request an injury investigation by the International Trade Commission (the Commission) with respect to certain outstanding countervailing duty orders issued pursuant to former section 303 of the Act. Countervailing Duty Order: Opportunity to Request a Section 753 Injury Investigation (60 FR 27963; May 26, 1995). On June 30, 1995, the Committee of Domestic Steel Wire Rope and Speciality Cable Manufacturers timely requested that the Commission conduct an investigation under section 753(a) with regard to the outstanding countervailing duty order on steel wire rope from Thailand. On January 5, 1998, the Commission initiated its investigation (63 FR 2414; January 15, 1998).

On January 15, 1998, the Domestic Steel Wire Rope Committee filed a letter with the Commission withdrawing its request for such an investigation, and requesting that the Commission rescind the initiation of its investigation. The Commission accepted the party's withdrawal of its request for an investigation, and rescinded the initiation of its investigation pursuant to sections 753(b)(1)(A) and 704(a)(1)(A) of the Act. Pursuant to section 753(b)(4) of the Act, the Commission notified the Department of its negative determination with regard to the outstanding countervailing duty order on steel wire rope from Thailand (63 FR 5816; February 4, 1998).

Scope

This countervailing duty order covers steel wire rope from Thailand. Steel wire rope encompasses ropes, cables, and cordage of iron or steel, other than stranded wire, not fitted with fittings or made up into articles, and not made up of brass plated wire. The order excludes stainless steel wire rope, i.e., ropes, cables, and cordage other than stranded wire, of stainless steel, not fitted with fittings or made up into articles, which is classifiable under Harmonized Tariff Schedule (HTS) subheading 7312.10.6000. Wire rope is currently classified under subheadings 7312.10.9030, 7312.10.9060, and 7312.10.9090 of the HTS. Although the HTS subheadings are provided for convenience and customs purposes, our written description of the scope is dispositive.

Determination

As a result of the determination of the Commission that an industry in the United States is not likely to be materially injured by reason of imports of the subject merchandise if the order is revoked, the Department hereby revokes the countervailing duty order on steel wire rope from Thailand pursuant to section 753(b)(3)(B) of the Act. The revocation is effective January 1, 1995, the date Thailand became a Subsidies Agreement country.

Suspension of Liquidation

The Department will instruct the United States Customs Service to discontinue the suspension of liquidation for imports of steel wire rope from Thailand. The Department will also instruct Customs to refund, with interest, any cash deposits of countervailing duties collected since January 1, 1995, when liquidation was suspended pursuant to section 753(a)(4) of the Act.

Dated: March 18, 1998.

Robert S. LaRussa,

Assistant Secretary for Import Administration.

[FR Doc. 98–7804 Filed 3–24–98; 8:45 am]

BILLING CODE 3510–DS–P

DEPARTMENT OF COMMERCE

International Trade Administration

Business Development Mission to Eastern Caribbean

AGENCY: International Trade Administration, Department of Commerce.

ACTION: Notice.

SUMMARY: This notice serves to inform the public of a business development and trade mission to Barbados, St. Lucia, and Grenada, to be held May 3–8, 1998 (''the mission''); provides interested U.S. firms with the opportunity to submit an application to participate in the mission; sets forth objectives, procedures, and selection review criteria for the mission; and requests interested parties to apply. The recruitment and selection of private sector participants in the mission will be conducted in accordance with the Statement of Policy Governing Department of Commerce Overseas Trade Missions announced by Secretary Daley on March 3, 1997 and reflected herein.

DATES: Applications should be received by April 8, 1998. Applications received after that date will be considered only if space and scheduling constraints permit. The mission is scheduled for May 3–8, 1998.

ADDRESSES: Request for and submission of applications: Application packets are available from the Project Officer; Ms. Rebecca Hunt, Regional Commercial Officer, U.S. Embassy—Santo Domingo, Dominican Republic, phone 1–809–221–2171 ex 404, fax 1–809–688–4838.

Numbers listed in this notice are not toll-free. An original and two copies of the required application materials should be sent to the Project Officer at the above address. Applications sent by facsimile must be immediately followed by submission of the original application to the Project Officer.

FOR FURTHER INFORMATION CONTACT: Ms. Rebecca Hunt, Project Officer, phone 1–809–221–2171 ex 404. Information is also available via the International Trade Administration's (ITA) Internet home page at http://www.ita.doc.gov/doctm.

SUPPLEMENTARY INFORMATION:

Mission Description

As a follow up to President Clinton's commitment at the Bridgetown summit held in May 1997, the Department of Commerce will organize a senior level business development mission to three Eastern Caribbean countries to promote expanded commercial opportunities for U.S. firms. The Clinton Administration has long been committed to fostering and supporting the region's goals of economic diversification, sustained growth, and social stability through the creation of service and niche industries. The President's commitment to the Eastern Caribbean was clearly confirmed with the Economic Goals that were established in the Bridgetown Summit. The United States is committed to increased participation in the economies of the region through: (1) The sales of goods and services in the sectors mentioned below, and (2) joint ventures and investments to foster competitiveness in each country and throughout the region.

With stops in Barbados, Grenada and St. Lucia, the mission will cover all of the Windward Islands (meetings will be held on Barbados with representatives from St. Vincent and the Grenadines and Dominica), focusing on export and business development opportunities for U.S. firms in the areas of tourism development (to include resort management, architectural/engineering services, marina development, building supplies and hotel/resort supplies), specialty and gourmet food industry development (to include food processing and packaging machinery and services, agricultural chemicals and industrial veterinary supplies) and opportunities in the business services area (financial, insurance and data processing) for small, medium and large companies through contacts with both the government and private sector.

The mission itinerary will be as follows:

May 3 (Sun.) Arrive Barbados
May 4 (Mon.) Barbados
May 5 (Tues.) Barbados
  Leave in pm for Grenada
  Arrive Grenada
May 6 (Wed.) Grenada
  Leave in pm for St. Lucia
May 7 (Thur.) St. Lucia
May 8 (Fri.) Mission Concludes

Criteria for Participation

Individuals must be a senior level executive, appropriate to the goals of the mission, with authority to execute sales and other marketing agreements. Company participation will be determined on the basis of:

—Consistency of the company's goals with the scope and desired outcome of the mission;
—Relevance of a company's business line to the plan for the mission;
—Past, present and prospective business activity in the Caribbean;
—Diversity of company size, type, location, demographics and traditional under-representation in business.
—A company's products or services must either be produced in the United States or, if not, marketed under the name of a U.S. firm and have U.S. content representing at least 51 percent of the value of the finished product/service. A national interest exception may be applied to this 51 percent rule when a senior Department official deems it appropriate.
—An applicant's partisan political activities (including political contributions) are irrelevant to the selection process. The recruitment and selection of private sector participants in the mission will be conducted according to the Statement of Policy Governing Department of Commerce Overseas Trade Missions announced by Secretary Daley on March 3, 1997 and reflected herein.
—Endorsements/referrals: Third parties may nominate or endorse potential applicants, but companies nominated or endorsed must themselves submit an application to be eligible for consideration. Referrals from political organizations will not be considered.

Cost: Mission participants will agree to pay the mission fee of $2,100. The participation fee does not cover participants' travel, lodging or other personal expenses.

Authority: 15 U.S.C. 1512.

Dated: March 18, 1998.

Dolores F. Harrod,

Deputy Assistant Secretary, International Operations, US&Foreign Commercial Service.

[FR Doc. 98–7724 Filed 3–24–98; 8:45 am]

BILLING CODE 3510–FP–P

DEPARTMENT OF COMMERCE

International Trade Administration

[Docket No. 980319069–8069–01]

Joint Projects with the U.S. Commercial Centers in Sao Paulo, Brazil; Jakarta, Indonesia; and Shanghai, People's Republic of China

AGENCY: U.S. and Foreign Commercial Service, International Trade Administration, Department of Commerce.

ACTION: Notice of opportunity.

SUMMARY: The Department of Commerce offers a unique opportunity for nonprofit trade promotion organizations to undertake a joint project with the U.S. and Foreign Commercial Service (US&FCS), the export promotion arm of the U.S. Government, in Brazil, Indonesia and the People's Republic of China. This joint project features space sharing with the US&FCS in the U.S. Commercial Centers (''Commercial Centers'') in Sao Paulo, Jakarta, and Shanghai to enhance opportunities for joint project participants to work toward shared market development goals and assist U.S. companies in-country.

FOR FURTHER INFORMATION CONTACT:

Alan Long, Director, U.S. Commercial Center—Sao Paulo, Rua Estados Unidos, 1812, Sao Paulo, SP. 01427–002, Brazil; or
AMCONGEN—Sao Paulo, Unit 3502, APO AA 34030. Tel: (55–11) 853–2811; Fax: (55–11) 3061–0718; Internet: ALong@doc.gov.
Jon Kuehner, Director, U.S. Commercial Center—Jakarta Wisma Metropolitan II, Third Floor, JL. Jendral Sudirman, Jakarta 12920, Indonesia. Tel: (62–21) 526–2850; Fax: (62–21) 526–2855; Internet: Jkuehner@doc.gov.
Will Center Principal Commercial Officer, U.S. Commercial Center—Shanghai Portman Shanghai Centre, Suite 631, 1369 Nanjing West Road, Shanghai, 200040 China. Tel: (86–21) 6279–7640; Fax: (86–21) 6279–7649; Internet: WCenter@doc.gov.

SUPPLEMENTARY INFORMATION:

Commercial Center Concept

U.S. Commercial Centers are enhanced U.S. government export promotion facilities that provide, under one roof, expert business counseling by frontline Commercial Officers, a proven array of trade promotion programs, and in-house business facilities. Commercial Centers are the only U.S. government operations that are designed physically and legally to share space on a long-term basis with nonprofit trade promotion entities who seek to build a

presence in one or more of these countries. US&FCS has authority to enter into joint projects on matters of mutual interest with public organizations and establish U.S. Commercial Centers overseas under 15 U.S.C. 1525 and 4723a. By working with other trade promotion organizations, US&FCS seeks to expand both the trade promotion resources available to U.S. companies as well as the number of U.S. companies served at the Commercial Center.

Eligible Participants

The U.S. and Foreign Commercial Service seeks other federal trade promotion agencies, state-local economic development agencies, nonprofit industry associations, regional and bilateral business councils, and other nonprofit trade promotion entities to share space in the Commercial Centers.

Features of Commercial Centers

Commercial Centers are strategically placed in the heart of the business districts of Sao Paulo, Jakarta and Shanghai to serve clients, U.S. companies, and their business partners in-country. While striving to adapt to local business conditions and opportunities, each Commercial Center provides a consistent level of service and access to core features. In accordance with the authorizing legislation, Title IV, Jobs Through Exports Act of 1992, U.S. Commercial Centers offer the following basic features:

- All the core US&FCS export promotion programs and services, including expert business counseling, advocacy, business-facilitation services;
- Long-term space-sharing for nonprofit trade promotion partners, such as other federal trade promotion agencies, state-local export development offices, and nonprofit industry associations;
- Fully equipped offices and executive support services (in Sao Paulo and Jakarta) for short-term use by U.S. companies and trade promotion organizations;
- Multipurpose rooms for conferences, meetings, technical seminars, product launches, receptions, and other business functions;
- Exhibit or display areas, depending on the market;
- Business Information Center, offering an array of information products, including up-to-the minute commercial intelligence on trade leads and opportunities, extensive market research on leading sectors, on-line/CD-ROM-based company and product locators, and from the Sao Paulo Center, accessibility from remote locations in the U.S. and Brazil; and
- Prime business location that enhances access to prospective business partners and clients.

Joint Project Opportunity in Sao Paulo, Brazil

In July 1994, the first U.S. Commercial Center was established in Sao Paulo. Since then, agencies including the U.S. Information Service, the Foreign Agricultural Service, and the Export-Import Bank have helped put the Commercial Center at the ''center'' of the bilateral commercial dialogue by holding key events such as government-to-government meetings, technical seminars, and business receptions at the Center. U.S. and Brazilian policymakers used the Sao Paulo Commercial Center as the primary vehicle for establishing the U.S.-Brazil Business Development Council (BDC), the bilateral forum for government-private sector commercial dialogue.

The San Paulo Commercial Center has four fully furnished private offices (twelve square meters each) for long-term participants. Two of these offices are expected to become available in July 1998. The annual contribution to participate in this joint project covers use of a private office, and common areas—reception area and business information center (commercial library). Use of the multipurpose rooms and audio visual equipment are available on a user-fee basis. For short-term use of business facilities, please contact the Commercial Center listed under the ''For More Information'' section or call the Trade Information Center for a program brochure at 1–800–USA–TRAD.

Joint Project Opportunity in Jakarta, Indonesia

The late Commerce Secretary Ronald H. Brown officially opened the U.S. Commercial Center in Jakarta during the ministerial meetings of the Asia-Pacific Economic Cooperation forum in November 1994. Since its inception, the Commercial Center has been a vehicle for implementing local and regional events, and linking trade policy with trade promotion by organizing bilateral roundtables in conjunction with technical seminars where participating small-and medium-size U.S. companies can demonstrate technical expertise to host country government policymakers and business decisionmakers. Already positioned as long-term participants are the California Trade and Commerce Agency, Foreign Agricultural Service and its Agricutural Trade Office, and the U.S.-Asia Environmental Partnership (USAEP). The current economic challenges sweeping through Asia make the Jakarta Commercial Center a ''first-stop'' in country for U.S. companies interested in pursuing business opportunities in Indonesia and the region.

Located in the Jakarta World Trade Center Complex, the Commercial Center has available one fully furnished office (twenty-five square meters). The annual contribution to participate in this joint project covers the use of the private office and common areas—a reception area and business information center (commercial library). Use of multi-purpose rooms and audio visual equipment are available on a user-fee basis.

For short-term use of business facilities, please contact the post listed under the **FOR MORE INFORMATION CONTACT** or call the Trade Information Center for a program brochure at 1–800–USA–TRAD.

Joint Project Opportunity in Shanghai, China

The U.S. Commercial Center in Shanghai, established in July 1996, is the first export-promotion facility of its kind in the People's Republic of China. Through the Commercial Centers, U.S. state economic development offices can open representative offices in China. Maryland, Michigan and Washington are among the first states to place representatives in the Commercial Center.

Shanghai is located at the mouth of the Yangtze River, the commercial lifeline of Southeast China, reinforcing this pivotal city's role as the commercial nexus that fits strategically between Beijing, the administrative capital, and the special economic zones in the southern and eastern coastal provinces. Placing the Commercial Center in Shanghai, the financial hub of all of China, positions U.S. companies to compete in the entire Chinese Economic Area, which comprise the vast markets of China, Taiwan and Hong Kong, which reverted to the Mainland in 1997.

The Shanghai Commercial Center includes six private offices for long-term space sharing, two of which are currently available. Offices are fully furnished and are either 20.6 square meters or 25.3 meters in size. The annual contribution to participate in this joint project covers use of private offices and common areas—a reception area and business information center (commercial library). Use of the multipurpose room and audio visual

equipment are available on a user-fee basis.

Please contact the post listed under the **FOR MORE INFORMATION CONTACT** for annual contributions and other Center-specific information or call the Trade Information Center for a program brochure at 1–800–USA–TRAD.

Short-term Use of Commercial Centers by U.S. Companies or Organizations

The joint project opportunity, which features long-term space for periods of one year or longer, is designed to assist nonprofit trade promotion organizations achieve long-term market development goals. The Commercial Centers in Sao Paulo and Jakarta also offer short-term use of business facilities to U.S. companies and business organizations on a user fee basis. For the latter group, the Commercial Center provides an ideal venue to achieve specific, short-term business objectives: hold meetings with prospective clients, potential agents/distributors, local staff, conduct market research, stage technical seminars or product launches, or find a local office. The length of time depends on the specific business objectives and proposals will be considered on a case-by-case basis. The broad goal of Commercial Centers is to offer clients a unique package that combines US&FCS counseling and trade programs and the convenience of using in-house business facilities—fully equipped offices, meeting and conference rooms, exhibit/display areas—at one site. The facilities are made available to complement the core US&FCS trade promotion programs and services which are designed to help U.S. companies export.

Next Steps

Contact the Commercial Centers directly to propose your use of the Commercial Centers on either a long-term or short-term basis. The Directors are in the best position to suggest most effective uses of the Commercial Center resources to achieve your business goals in-country. All proposals will be considered on a first-come, first-served basis.

For the convenience of clients, Commercial Center brochures will be made available through the Trade Information Center, located in Washington D.C.

For general inquiries or requests for export counseling on exploring business opportunities in Brazil, Indonesia and the People's Republic of China and neighboring markets, call 1–800–USA–TRAD and ask the Trade Information Center for the nearest US&FCS domestic field office, referred to as the U.S. Export Assistance Center, for individual counseling.

Marjory E. Searing,

Acting Assistant Secretary and Director General of the U.S. and Foreign Commercial Service.

[FR Doc. 98–6996 Filed 3–24–98; 8:45 am]

BILLING CODE 3510–FP–P

DEPARTMENT OF COMMERCE

National Oceanic and Atmospheric Administration

Agency Information Collection Activities: Proposed Collection; Comment Request

TITLE: Central Title and Lien Registry for Limited Access Permits.

ACTION: Proposed collection; comment request.

SUMMARY: The Department of Commerce, as part of its continuing effort to reduce paperwork and respondent burden, invites the general public and other Federal agencies to take this opportunity to comment on proposed and/or continuing information collections, as required by the Paperwork Reduction Act of 1995, Pub. L. 104–13 (44 U.S.C. 3506(c)(2)(A)).

DATES: Written comments must be submitted on or before May 26, 1998.

ADDRESSES: Direct all written comments to Linda Engelmeier, Departmental Forms Clearance Officer, Department of Commerce, Room 5327, 14th and Constitution Avenue, NW, Washington DC 20230.

FOR FURTHER INFORMATION CONTACT: Requests for additional information or copies of the information collection instrument(s) and instructions should be directed to Charles L. Cooper, Financial Services Division, Office of Sustainable Fisheries, National Marine Fisheries Service (NMFS), 1315 East West Highway, Silver Spring, Maryland 20910, (301) 713–2396.

SUPPLEMENTARY INFORMATION:

I. Abstract

The Magnuson-Stevens Fishery Conservation Act requires NMFS to establish a central registry (Registry) for limited access permits (LAPs). The Registry will be the exclusive means of perfecting title to LAPs. It will also be the exclusive means of perfecting security interests in, assignments of, and liens and other encumbrances against LAPs (except for Federal tax liens). The respondents will be commercial fishing industry creditors and borrowers, individuals, partnerships, corporations, and other fisheries parties which need to perfect limited access permit titles and liens.

II. Method of Collection

The collection of information will be collected on the Central Title and Lien Registry filing forms.

III. Data

OMB Number: New Collection.

Form Numbers: N/A.

Type of Review: Regular Submission.

Affected Public: Businesses and other for profit organizations—commercial fishermen, partnerships, and corporations applying for financing or buyback funds.

Estimated Number of Respondents: 3050.

Estimated Time Per Response: .5 hours.

Estimated Total Annual Burden Hours: 1,525.

Estimated Total Annual Cost to Public: No capital, operations, or maintenance costs are expected.

IV. Request for Comments

Comments are invited on: (a) Whether the proposed collection of information is necessary for the proper performance of the functions of the agency, including whether the information shall have practical utility; (b) the accuracy of the agency's estimate of the burden (including hours and cost) of the proposed collection of information; (c) ways to enhance the quality, utility, and clarity of the information to be collected; and (d) ways to minimize the burden of the collection of information on respondents, including through the use of automated collection techniques or other forms of information technology.

Comments submitted in response to this notice will be summarized and/or included in the request for OMB approval of this information collection; they also will become a matter of public record.

Dated: March 19, 1998.

Linda Engelmeier,

Departmental Forms Clearance Officer, Office of Management and Organization.

[FR Doc. 98–7701 Filed 3–24–98; 8:45 am]

BILLING CODE 3510–22–P

DEPARTMENT OF COMMERCE

National Oceanic and Atmospheric Administration

[Docket No.; I.D.112197A]

Draft Comprehensive Research and Monitoring Plan for Atlantic Highly Migratory Species

AGENCY: National Marine Fisheries Service (NMFS), National Oceanic and Atmospheric Administration (NOAA), Commerce.

ACTION: Notice of availability of proposed plan.

SUMMARY: NMFS announces the availability of a proposed plan for research and monitoring to support the conservation and management of Atlantic highly migratory species as required by the Atlantic Tunas Convention Act (ATCA). NMFS has prepared this draft plan based on extensive consultation with relevant Federal and state agencies, scientific and technical experts, commercial and recreational fishermen, and other interested persons, public and private. Members of the public are encouraged to respond to this opportunity for further comment on research and monitoring priorities for Atlantic highly migratory species.

DATES: Comments on the proposed plan must be submitted on or before May 11, 1998.

ADDRESSES: Written comments on the proposed plan should be sent to: Rebecca Lent, Chief, Highly Migratory Species Management Division (F/SF1), National Marine Fisheries Service (NMFS), 1315 East-West Highway, Silver Spring, MD 20910. This office will provide copies of the draft *Comprehensive Research and Monitoring Program for Atlantic Highly Migratory Species* upon request.

FOR FURTHER INFORMATION CONTACT: Rachel Husted, telephone (301) 713–2347; FAX (301) 713–1917.

SUPPLEMENTARY INFORMATION: NMFS currently undertakes a broad range of actions to address research and monitoring priorities, including rulemaking, scientific activities within the agency, and external partnerships that extend research capabilities. The agency has developed its existing research and monitoring program for HMS through a process of consultative reviews and public meetings with relevant Federal and state agencies, scientific and technical experts, commercial and recreational fishermen, and other interested persons, public and private. NMFS proposes to continue following this same public process, which has proven to be an effective means of consulting all interested parties.

The proposed plan is based upon the existing research and monitoring program at NMFS as well as suggestions for future initiatives based on domestic and international priorities. It has been prepared pursuant to Section 971i(b) of ATCA, which directs the Secretary of Commerce to develop and implement a comprehensive research and monitoring program to support the conservation and management of Atlantic bluefin tuna and other highly migratory species. Section 971i(b) requires that the comprehensive research and monitoring program for HMS shall provide for, but not be limited to, the following:

(a) Statistically designed cooperative tagging studies;

(b) Genetic and biochemical stock analyses;

(c) Population censuses carried out through aerial surveys of fishing grounds and known migration areas;

(d) Adequate observer coverage and port sampling of commercial and recreational fishing activity;

(e) Collection of comparable real-time data on commercial and recreational catches and landings through the use of permits, logbooks, landings reports for charter operations and fishing tournaments, and programs to provide reliable reporting of the catch by private anglers;

(f) Studies of the life history parameters of bluefin tuna and other highly migratory species;

(g) Integration of data from all sources and the preparation of data bases to support management decisions; and

(h) Other research as necessary.

Dated: March 19, 1998.

Gary C. Matlock,

Director, Office of Sustainable Fisheries, National Marine Fisheries Service.

[FR Doc. 98–7799 Filed 3–24–98; 8:45 am]

BILLING CODE 3510–22–F

COMMITTEE FOR THE IMPLEMENTATION OF TEXTILE AGREEMENTS

Amendment of Visa Requirements for Certain Cotton, Wool and Man-Made Fiber Apparel Produced or Manufactured in the Republic of Maldives

March 20, 1998.

AGENCY: Committee for the Implementation of Textile Agreements (CITA).

ACTION: Issuing a directive to the Commissioner of Customs amending visa requirements.

EFFECTIVE DATE: April 15, 1998.

FOR FURTHER INFORMATION CONTACT: Ross Arnold, International Trade Specialist, Office of Textiles and Apparel, U.S. Department of Commerce, (202) 482–4212.

SUPPLEMENTARY INFORMATION:

Authority: Section 204 of the Agricultural Act of 1956, as amended (7 U.S.C. 1854); Executive Order 11651 of March 3, 1972, as amended.

In exchange of notes dated May 16, 1997 and February 19, 1998, the Governments of the United States and the Republic of Maldives agreed to amend the existing export visa arrangement to require that the quantity stated on the visa be listed in whole units. If the quantity exported exceeds one specific whole unit but is less than the next whole unit, visaed quantities will be rounded to the closest whole unit. Half units will be rounded up. Where the exported unit is less than one unit, the shipment will be rounded upwards to one unit.

Effective on April 15, 1998, apparel products, produced or manufactured in Maldives and exported on or after April 15, 1998 must be accompanied by a visa with the quantity stated in whole units, decimals and fractions will no longer be accepted. There will be a grace period from April 15, 1998 through May 14, 1998 during which products, produced or manufactured in Maldives, will not be denied entry if the quantity is stated in decimals and fractions. Shipments exported after May 14, 1998 will be denied entry unless the quantity is stated in whole numbers.

In the letter published below, the Chairman of CITA directs the Commissioner of Customs to amend the export visa requirements.

See 47 FR 36879, published on August 24, 1982.

D. Michael Hutchinson,

Acting Chairman, Committee for the Implementation of Textile Agreements.

Committee for the Implementation of Textile Agreements

March 20, 1998.

Commissioner of Customs,
Department of the Treasury, Washington, DC 20229.

Dear Commissioner: This directive amends, but does not cancel, the directive issued to you on August 18, 1982, by the Chairman, Committee for the Implementation of Textile Agreements. That directive directed you to prohibit entry of certain cotton, wool and man-made fiber apparel, produced or manufactured in the Republic of

Maldives for which the Government of Maldives has not issued an appropriate export visa.

Effective on April 15, 1998 apparel, produced or manufactured in Maldives and exported on or after April 15, 1998 must be accompanied by a visa with the quantity stated in whole units, decimals and fractions will no longer be accepted. There will be a grace period from April 15, 1998 through May 14, 1998 during which apparel, produced or manufactured in Maldives and exported during that period, will not be denied entry if the quantity is stated in decimals and fractions. Shipments exported after May 14, 1998 will be denied entry unless the quantity is stated in whole numbers.

If the quantity exported exceeds one specific whole unit but is less than the next whole unit, visaed quantities will be rounded to the closest whole unit. Half units will be rounded up. Where the exported unit is less than one unit, the shipment will be rounded upwards to one unit.

Shipments entered or withdrawn from warehouse according to this directive which are not accompanied by an appropriate export visa shall be denied entry and a new visa must be obtained.

The Committee for the Implementation of Textile Agreements has determined that this action falls within the foreign affairs exception to the rulemaking provisions of 5 U.S.C. 553(a)(1).

Sincerely,

D. Michael Hutchinson,

Acting Chairman, Committee for the Implementation of Textile Agreements.

[FR Doc.98–7721 Filed 3–24–98; 8:45 am]

BILLING CODE 3510–DR–F

COMMITTEE FOR THE IMPLEMENTATION OF TEXTILE AGREEMENTS

Textile and Apparel Categories With the Harmonized Tariff Schedule of the United States; Changes to the 1998 Correlation

March 20, 1998.

AGENCY: Committee for the Implementation of Textile Agreements (CITA).

ACTION: Changes to the 1998 Correlation

FOR FURTHER INFORMATION CONTACT: Lori E. Mennitt, International Trade Specialist, Office of Textiles and Apparel, U.S. Department of Commerce, (202) 482–3400.

SUPPLEMENTARY INFORMATION:

The Correlation: Textile and Apparel Categories based on the Harmonized Tariff Schedule of the United States (1998) presents the harmonized tariff numbers under each of the cotton, wool, man-made fiber, silk blend and other vegetable fiber categories used by the United States in monitoring imports of these textile products and in the administration of the textile program. The Correlation should be amended to include the changes indicated below. These changes were effective on March 1, 1998:

Changes to the 1998 Correlation

These are new numbers and definitions for cooler bags:

Add 6307.90.9905 (369)—Cooler bags with an outer surface of textile materials, of cotton.

Add 6307.90.9907 (670)—Cooler bags with an outer surface of textile materials, of man-made fibers.

Add 6307.90.9909 (870)—Other cooler bags with an outer surface of textile materials.

These numbers were renumbered due to the creation of the statistical breakouts for cooler bags in chapter 63. The categories and definitions remain the same:

4202.92.3015 (369) becomes 4202.92.3016 (369).

4202.92.3030 (670) becomes 4202.92.3031 (670).

4202.92.3090 (870) becomes 4202.92.3091 (870).

Additional change:

Replace 6505.90.9095 (859) with 6505.90.9085 (859)—Other hats and other headgear, knitted or crocheted, not elsewhere specified or included.

D. Michael Hutchinson,

Acting Chairman, Committee for the Implementation of Textile Agreements.

[FR Doc. 98–7723 Filed 3–24–98; 8:45 am]

BILLING CODE 3510–DR–F

COMMODITY FUTURES TRADING COMMISSION

Sunshine Act Meeting

''FEDERAL REGISTER'' CITATION OF PREVIOUS ANNOUNCEMENT: 63 F.R. 10364.

PREVIOUSLY ANNOUNCED TIME AND DATE OF MEETING: 2:00 p.m., Thursday, March 26, 1998.

CHANGES IN THE MEETING: The Commodity Futures Trading Commission changed the meeting to discuss a rule enforcement review to April 2, 1998 at 2:00 p.m.

CONTACT PERSON FOR MORE INFORMATION: Jean A. Webb, 418–5100.

Catherine D. Dixon,

Assistant Secretary of the Commission.

[FR Doc. 98–7922 Filed 3–23–98; 11:26 am]

BILLING CODE 6351–01–M

CONSUMER PRODUCT SAFETY COMMISSION

[CPSC Docket No. 98–C0008]

In The Matter of Safety 1st, Inc., a Corporation; Provisional Acceptance of a Settlement Agreement and Order

AGENCY: Consumer Product Safety Commission.

ACTION: Provisional acceptance of a settlement agreement under the Consumer Product Safety Act.

SUMMARY: It is the policy of the Commission to publish settlements which it provisionally accepts under the Consumer Product Safety Act in the **Federal Register** in accordance with the terms of 16 CFR 1118.20. Published below is a provisionally-accepted Settlement Agreement with Safety 1st, Inc., a corporation, containing a civil penalty of $175,000.

DATES: Any interested person may ask the Commission not to accept this agreement or otherwise comment on its contents by filing a written request with the Office of the Secretary by April 9, 1998.

ADDRESSES: Persons wishing to comment on this Settlement Agreement should send written comments to the Comment 98–C0008, Office of the Secretary, Consumer Product Safety Commission, Washington, D.C. 20207.

FOR FURTHER INFORMATION CONTACT: William J. Moore, Jr., Trial Attorney, Office of Compliance and Enforcement, Consumer Product Safety Commission, Washington, D.C., 20207; telephone (301) 504–0626.

SUPPLEMENTARY INFORMATION: The text of the Agreement and Order appears below.

Dated: March 18, 1998.

Sadye E. Dunn,

Secretary.

CONSUMER PRODUCT SAFETY COMMISSION

Settlement Agreement And Order

1. Safety 1st, Inc. (''Safety 1st'') a corporation, enters into this Settlement Agreement and Order with the staff (''the staff'') of the Consumer Product Safety Commission (''the Commission'') in accordance with 16 CFR 1118.20 of the Commission's Procedures for Investigations, Inspections, and Inquiries under the Consumer Product Safety Act (''CPSC'').

I. The Parties

2. The Consumer Product Safety Commission is an independent federal

regulatory agency responsible for the enforcement of the Consumer Product Safety Act, 15 U.S.C. 2051–2084.

3. Safety 1st is a corporation organized and existing under the laws of the State of Massachusetts. Its principal offices are located at 210 Boylston Street, Chestnut Hill, MA 02167.

II. Staff Allegations

4. Between April 1994 and December 1994 Safety 1st manufactured and distributed approximately 191,000 portable Safety 1st Safe Keeper Bed Rails and Flashlight model 177 (hereinafter, ''Bed Rail'') in the United States. Safety 1st is, therefore, a manufacturer, distributor and a private labeler of the Bed Rail in commerce.

5. The Bed Rail is a portable household device intended to keep young children from falling out of bed. The Bed Rail is a consumer product.

6. The plastic support arm(s) of the Bed Rail may break or separate from the rest of the guard rail when children users move against them allowing children to become stuck between rail and bed or to fall out of bed. In addition, a sharp edge along the hard plastic seams of the bed rail may cause cuts and abrasions to children.

In 1994 and 1995, Safety 1st admits to receiving 25 injury complaints from consumers describing such Bed Rail incidents. Some of the reported incidents have caused fractures, bruises, lacerations to the face, head, back, chest and otherwise, and one concussion.

7. Safety 1st obtained information which reasonably supported the conclusion that its Bed Rail contained defects which could create a substantial product hazard but failed to report that information to the Commission in a timely manner as required by section 15(b) of the CPSA, 15 U.S.C. 2064(b).

III. Response of Safety 1st

8. Safety 1st denies the allegations of the staff that the Safekeeper Bed Rail and Flashlight contains any defect which could create a substantial product hazard pursuant to section 15(a) of the CPSA, 15 U.S.C. 2064(a), and further denies that it violated the reporting requirements of section 15(b) of the CPSA, 15 U.S.C. 2064(b).

9. Safety 1st filed a report as required by Section 15(b) of the CPSC, 15 U.S.C. 2064(b). Such report contained a disclaimer as to product defect and risk of a substantial product hazard. The separation of the support arms from the bed rail resulted from a failure of the installer to properly assemble the bed rail.

10. Safety 1st also contends that the incidents reported did not involve a serious risk of injury to the intended user age group for the bed rail.

IV. Agreement of The Parties

11. The Commission has jurisdiction over this matter under the Consumer Product Safety Act (CPSA), 15 U.S.C. 2051 *et seq.*

12. Safety 1st knowingly, voluntarily and completely waives any rights it may have (1) to an administrative or judicial hearing with respect to the staff allegations cited herein, (2) to judicial review or other challenge or contest of the validity of the Commission's Order, (3) to a determination by the Commission as to whether a violation of section 15(b) of the CPSA, 15 U.S.C. 2064(b), has occurred, and (4) to a statement of findings of fact and conclusion of law with regard to the staff allegations.

13. Upon provisional acceptance of this Settlement Agreement and Order by the Commission, this Settlement Agreement and Order shall be placed on the public record and shall be published in the **Federal Register** in accordance with 16 C.F.R. 1118.20.

14. The Settlement Agreement and Order becomes effective upon final acceptance by the Commission and its service upon Safety 1st.

15. Upon final acceptance of this Settlement Agreement by the Commission, the Commission will issue a press release to advise the public of the civil penalty Settlement Agreement and Order.

16. Safety 1st agrees to entry of the attached Order, which is incorporated herein by reference, and to be bound by its terms.

17. This Settlement Agreement and Order are entered into for settlement purposes only and shall not constitute an admission or determination arising from the allegations that the guard rails contain a defect which could create a substantial product hazard.

18. This Settlement Agreement is binding upon Safety 1st and the assigns or successors of Safety 1st.

19. Agreements, understandings, representations, or interpretations made outside this Settlement Agreement and Order may not be used to vary or to contradict its terms.

Dated: March 9, 1998.

Michael Lerner,

Chief Executive Officer, Safety 1st, Inc.

Dated: March 5, 1998.

Alan H. Schoem,

Assistant Executive Director, Office of Compliance, The Consumer Product Safety Commission.

Eric L. Stone,

Director, Legal Division, Office of Compliance, The Consumer Product Safety Commission.

William J. Moore, Jr.,

Attorney, Legal Division, Office of Compliance, Litigation, Office of Compliance, The Consumer Product Safety Commission.

Order

Upon consideration of the Settlement Agreement entered into between Respondent, Safety 1st, Inc., a corporation, and the staff of the Consumer Product Safety Commission; and the Commission having jurisdiction over the subject matter and Safety 1st, Inc., and it appearing that the Settlement Agreement and Order is in the public interest, it is

Ordered, that the Settlement Agreement be and hereby is accepted; and it is

Further ordered, that upon final acceptance of the Settlement Agreement and Order, Safety 1st, Inc. shall pay the Commission a civil penalty in the amount of one hundred seventy five thousand and no/100 dollars ($175,000.00), within ten (10) days after service of this Final Order upon the Respondent, Safety 1st, Inc.

Provisionally accepted and Provisional Order issued on the 18th day of March, 1998.

By order of the commission.

Sadye E. Dunn,

Secretary, Consumer Product Safety Commission.

[FR Doc. 98–7672 Filed 3–24–98; 8:45 am]

BILLING CODE 6355–01–M

DEPARTMENT OF DEFENSE

[QMB Control Number 0704–0286]

Notice and Request for Comments Regarding an Information Collection Requirement

AGENCY: Department of Defense (DoD).

ACTION: Notice and request for comments regarding a proposed extension of an approved information collection requirement.

SUMMARY: In compliance with Section 3506(c)(2)(A) of the Paperwork Reduction Act of 1995 (44 U.S.C. Chapter 35), DoD announces the

proposed extension of a public information collection requirement and seeks public comment on the provisions thereof. Comments are invited on (a) Whether the proposed collection of information is necessary for the proper performance of the functions of the agency, including whether the information will have practical utility; (b) the accuracy of the estimate of the burden of the proposed information collection; (c) ways to enhance the quality, utility, and clarity of the information to be collected; and (d) ways to minimize the burden of the information collection on respondents, including the use of automated collection techniques or other forms of information technology. This information collection requirement is currently approved by the Office of Management and Budget (OMB) for use through September 30, 1998. DoD proposes that OMB extend its approval for use through September 30, 2001.

DATES: Consideration will be given to all comments received by May 26, 1998.

ADDRESSES: Written comments and recommendations on the proposed information collection requirement should be sent to: Defense Acquisition Regulations Council, Attn: Ms. Melissa D. Rider, PDUSD (A&T) DP (DAR), IMD 3D139, 3062 Defense Pentagon, Washington, DC 20301–3062, Telefax (703) 602–0350.

E-mail comments submitted over the Internet should be addressed to: dfars@acq.osd.mil.

Please cite OMB Control Number 0704–0286 in all correspondence related to this issue. E-mail comments should cite OMB Control Number 0704–0286 in the subject line.

FOR FURTHER INFORMATION CONTACT: Ms. Melissa D. Rider, at (703) 602–0131. A copy of this information collection requirement is available electronically via the Internet at: http://www.dtic.mil/dfars/

Paper copies may be obtained from Ms. Melissa D. Rider, PDUSD (A&T) DP (DAR), IMD 3D139, 3062 Defense Pentagon, Washington, DC 20301–3062.

SUPPLEMENTARY INFORMATION:

Title, Associated Form, and OMB Number: Defense Federal Acquisition Regulation Supplement (DFARS) Part 205, Publicizing Contract Actions, and DFARS 252.205–7000, Provision of Information to Cooperative Agreement Holders; OMB Control Number 0704–0286.

Needs and Uses: This information collection requirement pertains to contractor information provided to Cooperative Agreement Holders. DFARS Subpart 205.4 and the clause at DFARS 252.205–7000 require that defense prime contractors awarded contracts over $500,000 provide to cooperative agreement holders, upon request, a list of employees or offices that are responsible for entering into subcontracts under defense contracts. The cooperative agreement holders further disseminate the information to other firms within a geographic area defined in the individual cooperative agreements. The purpose of the cooperative agreements is for the agreement holders to provide procurement technical assistance to business entities within a specified geographic area. This guidance implements 10 U.S.C. 2416.

Affected Public: Businesses or other for-profit and not-for-profit institutions.

Annual Burden Hours: 7,548.

Number of Responses: 6,682.

Responses per Respondent: 1.

Average Burden per Response: 1.13 hours.

Frequency: On occasion.

Summary of Information Collection

DFARS Subpart 205.4 and the clause at DFARS 252.205–7000 require that defense prime contractors awarded contracts over $500,000 provide to cooperative agreement holders, upon their request, a list of those appropriate employees or offices responsible for entering into subcontracts under defense contracts. The list must include the business address, telephone number, and area of responsibility of each employee or office. The contractor need not provide the list to a particular cooperative agreement holder more frequently than once a year.

Michele P. Peterson,

Executive Editor, Defense Acquisition Regulations Council.

[FR Doc. 98–7711 Filed 3–24–98; 8:45 am]

BILLING CODE 5000–04–M

DEPARTMENT OF DEFENSE

Department of the Army

Environmental Assessment (EA) on the Disposal and Reuse of the BRAC Parcels at Sierra Army Depot (SIAD), California

AGENCY: Department of the Army, DoD.

ACTION: Notice of availability.

SUMMARY: The Department of the Army announces the availability of the Environmental Assessment (EA) and Finding of No Significant Impact (FNSI) for the proposed action evaluated by this EA to dispose of property made available by the realignment of Sierra Army Depot (SIAD), California, in accordance with the Defense Base Closure and Realignment Act of 1990, Public Law 101–510, as amended. The EA addresses the environmental consequences of the disposal and subsequent reuse of approximately 4,397 acres at SIAD. The Army will negotiate the transfer of 2,688 acres to the Lassen County Local Redevelopment Authority (LRA), transfer 1,037 acres to the U.S. Department of Health and Human Services, and 600 acres to the U.S. Department of Justice. Seventy-two acres have transferred to the U.S. Department of Interior which were the subject of a separate environmental analysis but the impacts of disposal are also analyzed in the cumulative effectives section of this EA. Three alternative methods of disposal were analyzed: Encumbered disposal, unencumbered disposal and retention of the property in caretaker status (i.e., no action alternative). The Army's preferred alternative for dipsosal of the SIAD BRAC parcels is encumbered disposal which involves conveying the property with conditions imposed on easements and rights-of-ways, remedial activities, unexploded ordnance restriction, noise advisory, wetlands, threatened and endangered species habitat, archaeological site protection and utilities dependencies.

The EA, which is incorporated into the Finding of No Significant Impact (FNSI), examines potential effects of the proposed action and alternatives on 15 resources areas and areas of environmental concern: Land use, climate, air quality, noise, geology, and water resources infrastructure, hazardous and toxic substances, permits and regulatory authorizations, biological resources and ecosystems, cultural resources, economic development, socioeconomics and quality of life.

The cumulative effects analysis of the EA determined that one resource category, (socioeconomic impacts), would have significant adverse impacts. A significant impact to sociological affects, in and of itself, does not give rise to an EIS pursuant to 40 CFR 1508.14. Accordingly, a FNSI is appropriate and an EIS will not be prepared.

DATES: Comments must be submitted on or before April 24, 1998.

ADDRESSES: A copy of the EA or inquiries into the FNSI may be obtained by writing to Mr. Glen Coffee at the U.S. Army Corps of Engineers, Mobile District, P.O. Box 2288, Mobile, Alabama 36628–0001 or by facsimile at (334) 690–2721.

Dated: March 13, 1998.

Raymond J. Fatz,

Deputy Assistant Secretary of the Army (Environment, Safety and Occupational Health), OASA (I,L&E).

[FR Doc. 98–7698 Filed 3–24–98; 8:45 am]

BILLING CODE 3710–08–M

DEPARTMENT OF DEFENSE

Department of the Army

Program for Qualifying Department of Defense (DOD) Brokers

AGENCY: Military Traffic Management Command, DOD.

ACTION: Notice.

SUMMARY: In previous **Federal Register** notice (Vol. 62, No. 27, pages 5962–5963) Monday, February 10, 1997, the Headquarters, Military Traffic Management Command (HQMTMC) announced a request for comments on the Program for Qualifying Department of Defense (DoD) Brokers. Due to comments received concerning the earlier notice, HQMTMC has decided to test the Broker Program for a period of one year, beginning June 1, 1998 and ending June 1, 1999. Brokers will be allowed to participate in the movement of all DoD freight except for shipments requiring Transportation Protection Services (TPS). Brokers will be evaluated using the same rules as those applied to carriers who are currently approved to do business with the DoD.

ADDRESSES: Headquarters, Military Traffic Management Command, ATTN: MTOP–QQ, Room 630, 5611 Columbia Pike, Falls Church, Virginia 22041–5050.

FOR FURTHER INFORMATION CONTACT: Rick Wirtz, MTOP–QQ, telephone 703–681–6393.

SUPPLEMENTARY INFORMATION: MTMC is the agency established within the DoD for the procurement of land transportation services from commercial carriers on behalf of DOD shippers. Historically brokers could not participate in DOD traffic because the broker was an intermediary between the shipper and the carrier, essentially duplicating the mission performed by MTMC of matching the DOD shipper's requirements with a carrier which can accommodate the move. Brokers were not carriers, did not perform transportation, did not assume responsibility for the transportation, and did not publish tariffs or offer Government rate tenders, or enter into Government bills of lading (GBLs) or other transportation contracts. Today, in the deregulated transportation environment, brokers can and do conduct carrier operations, perform transportation, and assume responsibility for the transportation, and no reason appears why they may not voluntarily enter into the DOD standard tender/GBL and other transportation contracts arranged by MTMC. Consequently, MTMC is not proposing to change its policy in order to offer brokers the opportunity to qualify for participation in DOD transportation procurements, except shipments requiring a Transportation Protective Services (TPS). Under MTMC's new policy, brokers interested in completing for DOD traffic, except TPS shipments, could apply for qualification by executing the basic Agreement, and by complying with requirements for submission of evidence of insurance (public liability and cargo), a list of underlying carriers which the broker intends to use in the movement of DOD shipments, a performance bond, and other standard requirements.

Frederick G. Wirtz,

Traffic Management Specialist.

[FR Doc. 98–7720 Filed 3–24–98; 8:45 am]

BILLING CODE 3710–08–M

DEPARTMENT OF EDUCATION

Submission for OMB Review; Comment Request

AGENCY: Department of Education

ACTION: Submission for OMB review; comment request.

SUMMARY: The Deputy Chief Information Officer, Office of the Chief Information Officer, invites comments on the submission for OMB review as required by the Paperwork Reduction Act of 1995.

DATES: Interested persons are invited to submit comments on or before April 24, 1998.

ADDRESSES: Written comments should be addressed to the Office of Information and Regulatory Affairs, Attention: Danny Werfel, Desk Officer, Department of Education, Office of Management and Budget, 725 17th Street, NW., Room 10235, New Executive Office Building, Washington, DC 20503. Requests for copies of the proposed information collection requests should be addressed to Patrick J. Sherrill, Department of Education, 600 Independence Avenue, SW., Room 5624, Regional Office Building 3, Washington, DC 20202–4651.

FOR FURTHER INFORMATION CONTACT: Patrick J. Sherrill (202) 708–8196. Individuals who use a telecommunications device for the deaf (TDD) may call the Federal Information Relay Service (FIRS) at 1–800–877–8339 between 8 a.m. and 8 p.m., Eastern time, Monday through Friday.

SUPPLEMENTARY INFORMATION: Section 3506 of the Paperwork Reduction Act of 1995 (44 U.S.C. Chapter 35) requires that the Office of Management and Budget (OMB) provide interested Federal agencies and the public an early opportunity to comment on information collection requests. OMB may amend or waive the requirement for public consultation to the extent that public participation in the approval process would defeat the purpose of the information collection, violate State or Federal law, or substantially interfere with any agency's ability to perform its statutory obligations. The Deputy Chief Information Officer, Office of the Chief Information Officer, publishes this notice containing proposed information collection requests prior to submission of these requests to OMB. Each proposed information collection, grouped by office, contains the following: (1) Type of review requested, e.g., new, revision, extension, existing or reinstatement; (2) Title; (3) Summary of the collection; (4) Description of the need for, and proposed use of, the information; (5) Respondents and frequency of collection; and (6) Reporting and/or Recordkeeping burden. OMB invites public comment at the address specified above. Copies of the requests are available from Patrick J. Sherrill at the address specified above.

Dated: March 19, 1998.

Gloria Parker,

Deputy Chief Information Officer, Office of the Chief Information Officer.

Office of Elementary and Secondary Education

Type of Review: Extension.

Title: Comprehensive School Reform Demonstration Program.

Frequency: Annually.

Affected Public: Businesses or other for-profits; not-for-profit institutions; State, local or Tribal Gov't; SEAs or LEAs.

Annual Reporting and Recordkeeping Hour Burden:

Responses: 56.

Burden Hours: 2,240.

Abstract: This application will be used by the State Education Agencies (SEAs) to obtain funds to provide competitive grants to local education agencies to assist local Title I and some non-Title I schools to adopt research-based comprehensive school reform models. The information will be used to

review and to approve SEA applications to participate in the program.

[FR Doc. 98–7683 Filed 3–24–98; 8:45 am]

BILLING CODE 4000–01–P

DEPARTMENT OF ENERGY

Notice of Renewal of the Secretary of Energy Advisory Board

Pursuant to section 14 (a) (2) (A) of the Federal Advisory Committee Act and in accordance with title 41 of the Code of Federal Regulations, section 101–6.1015, and following consultation with the Committee Management Secretariat of the General Services Administration, notice is hereby given that the Secretary of Energy Advisory Board (the Board) has been renewed for an additional two-year period, beginning in March 1998.

The Board will continue to provide independent, balanced, and authoritative advice to the Secretary of Energy on matters concerning the Department's management, basic science, research, development and technology activities; energy and national security responsibilities; environmental cleanup activities; energy-related economic activities; and the operations of the Department.

The Board members are selected to assure well-balanced geographical representation and on the basis of their broad competence in areas relating to quality management, basic science, renewable energy, energy policy, environmental science, economics, and broad public policy interests. Membership of the Board will continue to be determined in accordance with the requirements of the Federal Advisory Committee Act (Pub. L. 92–463) and implementing regulations.

The renewal of the Board has been determined to be in the public interest, important and vital to the conduct of the Department's business in connection with the performance of duties established by statute for the Department of Energy. The Board will operate in accordance with the provisions of the Federal Advisory Committee Act (Pub. L. 92–463), the General Services Administration Final Rule on Federal Advisory Committee Management, and other directives and instructions issued in implementation of those acts.

FOR FURTHER INFORAMTION CONTACT: Ms. Rachel M. Samuel, U.S. Department of Energy, HR–7, FORS, Washington, D.C. 20585, Telephone: (202) 586–3279.

Issued in Washington, D.C. on March 20, 1998.

James N. Solit,

Advisory Committee Management Officer.

[FR Doc. 98–7733 Filed 3–24–98; 8:45 am]

BILLING CODE 6450–01–P

DEPARTMENT OF ENERGY

Office of Energy Research

Energy Research Financial Assistance Program Notice 98–15; Integrated Assessment of Global Climate Change Research Program

AGENCY: U.S. Department of Energy.

ACTION: Notice inviting research grant applications.

SUMMARY: The Office of Biological and Environmental Research (OBER) of the Office of Energy Research (ER), U.S. Department of Energy (DOE), hereby announces its interest in receiving applications for the Integrated Assessment of Global Climate Change Program. This notice is a follow on to four previous notices published in the **Federal Register** (Notice 93–4 published December 9, 1992, entitled Economics of Global Change Research Program; Notice 95–12 published December 29, 1994, entitled Global Change Assessment Research Program; Notice 96–06 published January 30, 1996, entitled Global Change Integrated Assessment Research, and Notice 97–06 published February 11, 1997, entitled Integrated Assessment of Global Climate Change Research Program). The research program supports the Department's Global Change Research Program, the U.S. Global Change Research Program and the Administration's goals to understand and mitigate the rise in greenhouse gases.

DATES: Applicants are encouraged (but not required) to submit a brief preapplication for programmatic review. All preapplications, referencing Program Notice 98–15, should be received by DOE by 4:30 P.M., E.D.T. April 20, 1998, but early submission of preapplications is encouraged to allow time for meaningful dialogue.

The deadline for receipt of formal applications is 4:30 p.m., E.D.T., May 21, 1998, to be accepted for merit review and to permit timely consideration for award in fiscal year 1998 and early fiscal year 1999.

ADDRESSES: Preapplications, referencing Program Notice 98–15, should be sent E-mail to john.houghton@oer.doe.gov.

Formal applications, referencing Program Notice 98–15, should be sent to: U.S. Department of Energy, Office of Energy Research, Grants and Contracts Division, ER–64, 19901 Germantown Road, Germantown, MD 20874–1290, ATTN: Program Notice 98–15. This address must also be used when submitting applications by U.S. Postal Service Express Mail or any other commercial overnight delivery service, or when hand-carried by the applicant.

FOR FURTHER INFORMATION CONTACT: Dr. John Houghton, Environmental Sciences Division, ER–74, Office of Biological and Environmental Research, Office of Energy Research, U.S. Department of Energy, 19901 Germantown Road, Germantown, MD 20874–1290, telephone: (301) 903–8288, E-mail: john.houghton@oer.doe.gov, fax: (301) 903–8519. The full text of Program Notice 98–15 is available via the Internet using the following web site address: http://www.er.doe.gov/production/grants/fr98 __(1 times) 15.html.

SUPPLEMENTARY INFORMATION: The determination of energy policy, such as the administration's analysis of international protocols for global climate change, is tied to understanding the benefits and costs of potential actions with respect to the control of greenhouse gases and possible climate change. The research described in this notice supports the analysis of those benefits and costs.

A theme common to the research topics supported by this program is the support of integrated assessment of global climate change. Integrated assessment of climate change is defined here as the analysis of climate change from the cause, such as greenhouse gas emissions, through impacts, such as changed energy requirements for space conditioning due to temperature changes. Integrated assessment is sometimes, but not always, implemented as a computer model. It evaluates the benefits and costs, not necessarily measured monetarily, for various actions to mitigate global climate change. A description of integrated assessment may be found in Chapter 10: ''Integrated Assessment of Climate Change: An Overview and Comparison of Approaches and Results,'' in Climate Change 1995: Economic and Social Dimensions of Climate Change, edited by Bruce, James P.; Lee, Hoesung; and Haites, Erik F., Cambridge University Press, 1996.

This research will be judged in part on its potential to improve and/or support the analytical basis for policy development. The program is narrowly focused and will primarily concentrate support on the topics described below. Applications that involve development

of analytical models and computer codes will be judged partly on the basis of proposed tasks to prepare documentation and make the models and codes available to other groups.

The following is a list of topics that are high priority. Topics proposed by principal investigators that fall outside this list will need strong justification.

A. Technology Innovation and Diffusion

This category has been a primary focus of the Integrated Assessment of Global Climate Change Program since its initiation five years ago. Potential research projects include such issues as:

- Decomposing the effect of technology innovation and diffusion on carbon emissions into such components as changes in GDP, sectoral mix, innovation, and diffusion. Historical records might be used to estimate trends and make projections that vary as a function of price effects and policy options.
- Technology innovation and diffusion is an important part of several aspects of integrated assessment models, such as backstop technologies, adaptation, resource depletion, labor productivity, and substitution parameters for shifting factor shares. Investigations might include studies to help predict changes in these parameters both for a base case and for various policy options, as well as studies to analyze the internal consistency among these aspects.
- The rate and nature of technology diffusion from the OECD to developing countries is not well understood. Relevant factors include the prediction of the energy-use path for developing countries, the effects of changes in international trade policies and patterns, and carbon leakage.
- The translation of existing literature on the economics of technology innovation into a representation that could be adapted for IA models.
- Investment or other policies to encourage research and development are options for increasing abatement and improving adaptation. Research in this topic would investigate such subjects as evaluating the effectiveness of alternative modes of implementation, such as direct grants or cooperative research projects. How does technology innovation and diffusion happen, and how can we improve it?

B. Emissions Trading

The recent Kyoto protocol has heightened the need to understand the issues involved in implementing emission trading procedures. An underlying question is to design trading procedures so that actions are encouraged that are as coincidental with the goals of the agreement as possible. Research in this area would include theoretical work on emissions trading as well as applied. Such practical factors include:

- What institutional factors need to be considered? What role should be played by national governments? Which set of institutions should be regulated (for example, utilities, distributors, etc.)
- In what way should emission trading be phased in?
- What differences are there between CO_2 and the five other greenhouse gases?
- How flexibly can the emissions trading practices be designed? How well will the practices accommodate changes in targets, country participation, institutional design, or relative weights among the gases?

C. Supply Curves for Non-CO_2 Greenhouse Gases

The Kyoto protocol has included five greenhouse gases other than CO_2: CH_4, N_2O, CFC-11, HCFC-22, and CF_4. The ''supply curves'' (emission scenarios) for the other five gases are much more poorly understood than the supply curve for CO_2. This research topic would provide information on global emissions of the other five gases under business-as-usual scenarios as well as under plausible alternative scenarios that would result from policy actions.

D. Supply Curves for Land Use

The Kyoto protocol highlighted land use mitigation as an important policy option. Carbon dioxide emissions as a function land use practices are more poorly approximated than emissions from combustion of fossil fuels. Research funded under this topic would develop new information on global carbon dioxide emissions from various land use scenarios, including forests and agricultural lands. The emphasis is on global scale estimates, perhaps regionally disaggregated. What potential is there for enhancing CO_2 uptake? What changes in the global carbon balance could be expected from policy options?

E. Representation of Carbon Management Technologies

Current integrated assessment models include representations of well-known technologies and forecast changes in those technologies into the distant future. However, in general, the models do not represent with as much reliability forecasts of innovative technology changes that might be due to new research and technologies that reduce atmospheric concentrations of carbon dioxide. Research is ongoing that will improve our understanding and ability to develop innovative clean energy sources that will emit less carbon dioxide to the atmosphere. Such developments may rely on the use of fossil fuels and carbon sequestration in the oceans or deep subsurface. New modes of supplying and using substantial amounts of energy, such as hydrogen and fuel cells, may alter future energy, emission, and economy parameters substantially. Research in this topic would identify reasonable technology scenarios that will guide the integrated assessment predictions of energy, fossil fuel use, costs, emissions, and so forth, in response to various policy options.

Program Funding

It is anticipated that up to $1 million will be available for multiple awards to be made in FY 1998 and early FY 1999 in the categories described above, contingent on the availability of appropriated funds. Applications may request project support up to three years, with out-year support contingent on the availability of funds, progress of the research, and programmatic needs. Annual budgets are expected to range from $30,000 to $150,000 total costs.

Collaboration

Applicants are encouraged to collaborate with researchers in other institutions, such as: universities, industry, non-profit organizations, federal laboratories and FFRDCs, including the DOE National Laboratories, where appropriate, and to incorporate cost sharing and/or consortia wherever feasible.

Collaborative research applications may be submitted in several ways:

(1) When multiple private sector or academic organizations intend to propose collaborative or joint research projects, the lead organization may submit a single application which includes another organization as a lower-tier participant (subaward) who will be responsible for a smaller portion of the overall project. If approved for funding, DOE may provide the total project funds to the lead organization who will provide funding to the other participant via a subcontract arrangement. The application should clearly describe the role to be played by each organization, specify the managerial arrangements and explain the advantages of the multi-organizational effort.

(2) Alternatively, multiple private sector or academic organizations who intend to propose collaborative or joint research projects may each prepare a

portion of the application, then combine each portion into a single integrated scientific application. A separate Face Page and Budget Pages must be included for each organization participating in the collaborative project. The joint application must be submitted to DOE as one package. If approved for funding, DOE will award a separate grant to each collaborating organization.

(3) Private sector or academic organizations who wish to form a collaborative project with a DOE FFRDC may not include the DOE FFRDC in their application as a lower-tier participant (subaward). Rather, each collaborator may prepare a portion of the proposal, then combine each portion into a single, integrated scientific proposal. The private sector or academic organization must include a Face Page and Budget Pages for its portion of the project. The FFRDC must include separate Budget Pages for its portion of the project. The joint proposal must be submitted to DOE as one package. If approved for funding, DOE will award a grant to the private sector or academic organization. The FFRDC will be funded, through existing DOE contracts, from funds specifically designated for new FFRDC projects. DOE FFRDCs will not compete for funding already designated for private sector or academic organizations. Other Federal laboratories who wish to form collaborative projects may also follow guidelines outlined in this section.

Preapplications

A brief preapplication may be submitted. The preapplication should identify on the cover sheet the institution, Principal Investigator name, address, telephone, fax and E-mail address, title of the project, and the field of scientific research. The preapplication should consist of a two to three page narrative describing the research project objectives and methods of accomplishment. These will be reviewed relative to the scope and research needs of the Integrated Assessment of Global Climate Change Research Program.

Preapplications are strongly encouraged but not required prior to submission of a full application. Please note that notification of a successful preapplication is not an indication that an award will be made in response to the formal application.

Applications will be subjected to scientific merit review (peer review) and will be evaluated against the following evaluation criteria listed in descending order of importance as codified at 10 CFR 605.10(d):

1. Scientific and/or Technical Merit of the Project,

2. Appropriateness of the Proposed Method or Approach,

3. Competency of Applicant's Personnel and Adequacy of Proposed Resources,

4. Reasonableness and Appropriateness of the Proposed Budget.

The evaluation will include program policy factors such as the relevance of the proposed research to the terms of the announcement and an agency's programmatic needs. Note, external peer reviewers are selected with regard to both their scientific expertise and the absence of conflict-of-interest issues. Non-federal reviewers may be used, and submission of an application constitutes agreement that this is acceptable to the investigator(s) and the submitting institution.

Information about the development and submission of applications, eligibility, limitations, evaluation, selection process, and other policies and procedures may be found in 10 CFR Part 605, and in the Application Guide for the Office of Energy Research Financial Assistance Program. Electronic access to the Guide and required forms is made available via the World Wide Web at: http://www.er.doe.gov/production/grants/grants.html. The research project description must be 15 pages or less, exclusive of attachments and must contain an abstract or summary of the proposed research. On the ER grant face page, form DOE F 4650.2, in block 15, also provide the PI's phone number, fax number and E-mail address. Attachments include curriculum vitae, a listing of all current and pending federal support, and letters of intent when collaborations are part of the proposed research.

Although the required original and seven copies of the application must be submitted, researchers are asked to submit an electronic version of their abstract of the proposed research in ASCII format and their E-mail address to Karen Carlson by E-mail at karen.carlson@oer.doe.gov. Curriculum vitae should be submitted in a form similar to that of NIH or NSF (two to three pages), see for example: http://www.nsf.gov:80/bfa/cpo/gpg/fkit.htm#forms-9.

Related Funding Opportunities

Investigators may wish to obtain information about the following related funding opportunities:

National Oceanic and Atmospheric Administration

Within the context of its Economics and Human Dimensions of Climate Fluctuations Program, the Office of Global Programs of the National Oceanic and Atmospheric Administration will support research that identifies and analyzes social and economic impacts associated with seasonal, year-to-year, and intradecadal climate variability; improves our understanding of factors that determine human vulnerability to such fluctuations; and identifies options for reducing vulnerability. The program is particularly interested in learning how advanced climate information (e.g., ENSO-based probabilistic climate forecasts), as well as an improved understanding of current coping mechanisms, could be used for reducing vulnerability and providing for more efficient adjustment to these variations. Notice of this program is included in the Program Announcement for NOAA's Climate and Global Change Program, which is published each spring in the **Federal Register**. The deadline for proposals to be considered in Fiscal Year 1999 is expected to be in late summer 1998. For further information, contact: Caitlin Simpson; Office of Global Programs; National Oceanic and Atmospheric Administration; 1100 Wayne Ave., Suite 1225; Silver Spring, MD 20910; telephone: (301) 427–2089, ext. 47; Internet: simpson@ogp.noaa.gov.

Environmental Protection Agency

In 1998 the Environmental Protection Agency will support research on ''Indicators of Global Climate Change.'' Related requests for assistance that are currently advertised on the EPA home page include ''Ecological Indicators,'' ''Regional Scale Analysis and Assessment,'' ''Water and Watersheds'' and ''Research and Monitoring Program on Ecological Effects of Environmental Stressors Using Coastal Intensive Sites.'' Information is available through the web site: http://www.epa.gov/ncerqa or hotline 1–800–490–9194. For further information contact Barbara Levinson at Levinson.Barbara@EPAMail.EPA.Gov.

The Catalog of Federal Domestic Assistance Number for this program is 81.049, and the solicitation control number is ERFAP 10 CFR Part 605.

Issued in Washington, DC, on March 18, 1998.

John Rodney Clark,

Associate Director for Resource Management, Office of Energy Research.

[FR Doc. 98–7717 Filed 3–24–98; 8:45 am]

BILLING CODE 6450–01–P

DEPARTMENT OF ENERGY

Office of Energy Research

Energy Research Financial Assistance Program Notice 98–14; Natural and Accelerated Bioremediation Research Program (NABIR)

AGENCY: U.S. Department of Energy.

ACTION: Notice inviting research grant applications.

SUMMARY: The Office of Biological and Environmental Research (OBER) of the Office of Energy Research (ER), U.S. Department of Energy (DOE), hereby announces its interest in receiving applications for research grants in the Natural and Accelerated Bioremediation Research (NABIR) Program. Grant applications are being solicited for five of the eight NABIR Program research elements: (1) Assessment; (2) Biotransformation and Biodegradation; (3) Community Dynamics and Microbial Ecology; (4) System Engineering, Integration, Prediction, and Optimization; and Bioremediation and its Social Implications and Concerns (BASIC).

DATES: Applicants should submit a Notice of Intent to Apply, containing a title, a list of investigators, and a five-line summary of proposed research by April 15, 1998.

The deadline for receipt of formal applications is 4:30 p.m., E.D.T., May 13, 1998, to be accepted for merit review and to permit timely consideration for award in fiscal year 1998.

ADDRESSES: Notices of Intent to Apply, referencing Program Notice 98–14, should be sent by E-mail to john.houghton@oer.doe.gov.

Formal applications, referencing Program Notice 98–14, must be sent to: U.S. Department of Energy, Office of Energy Research, Grants and Contracts Division, ER–64, 19901 Germantown Road, Germantown, MD 20874–1290, ATTN: Program Notice 98–14. This address must also be used when submitting applications by U.S. Postal Service Express Mail or any other commercial overnight delivery service, or when hand-carried by the applicant.

FOR FURTHER INFORMATION CONTACT: Dr. John Houghton, Environmental Sciences Division, ER–74, Office of Biological and Environmental Research, Office of Energy Research, U.S. Department of Energy, 19901 Germantown Road, Germantown, MD 20874–1290, telephone (301) 903–8288, E-mail john.houghton@oer.doe.gov, fax (301) 903–8519. The full text of Program Notice 98–14 is available via the Internet using the following web site address: http://www.er.doe.gov/production/grants/grants.html.

SUPPLEMENTARY INFORMATION: The mission of the NABIR Program is to provide the scientific understanding needed to use natural in situ processes and to develop new methods to accelerate those processes for bioremediation at DOE facilities. The NABIR program is initially emphasizing the bioremediation of metals and radionuclides in the subsurface below the root zone, including both thick vadose and saturated zones. The program is implemented through seven interrelated scientific research elements (Acceleration, Assessment, Biogeochemical Dynamics, Biomolecular Science and Engineering, Biotransformation and Biodegradation, Community Dynamics and Microbial Ecology, and System Engineering, Integration, Prediction, and Optimization); and a social and legal element called Bioremediation and its Social Implications and Concerns (BASIC). A document entitled Natural and Accelerated Bioremediation Research Program Plan (DOE/ER–0659T) containing an initial planning description of the NABIR Program and each of the science elements is available via the Internet using the following web site address: http://www.er.doe.gov/production/ober/nabir/cover.html. The NABIR Program Plan is also available from the Office of Scientific and Technical Information, P.O. Box 62, Oak Ridge, TN 37831 (DOE and DOE grantees only) and the U.S. Department of Commerce, Technology Administration, National Technical Information Service, Springfield, VA 22161, (703) 487–4650 (public source). Additional information about NABIR, such as references to infrastructure that could be available to the research community, can be accessed from the NABIR Homepage: http://www.lbl.gov/NABIR/. Abstracts of currently funded projects are available via the Internet using the following web site address: http://www.lbl.gov/NABIR/awardees.html.

Each scientific research element is directed by a program manager from OBER, who is responsible for providing support and overall direction for the element, including determining the relevance of the proposed research to the goals and objectives of the program element to the NABIR and other DOE programs. The NABIR program also has Science Team Leaders, selected through an earlier peer review process, who provide scientific leadership and coordination to the community of NABIR investigators. Information on the current Science Team Leaders and DOE program staff is available via the Internet using the following web site address: http://www.lbl.gov/NABIR/research__5.html.

Program Focus

The NABIR Program supports long-term, hypothesis-driven research directed at specific topics that will provide the understanding necessary to develop effective new bioremediation technologies for DOE site cleanup. This research will help determine the future viability of bioremediation technologies at the DOE sites. The NABIR Program will not support research to evaluate the risk to humans. Although the program is directed at specific goals, it supports research that is more fundamental in nature than demonstration projects.

The initial emphasis of the NABIR Program is on field-scale research and metal and radionuclide contamination, specifically on the metals and radionuclides associated with past weapons production activities. However, the research program will support laboratory, theoretical, modeling, and other non-field research projects, if they fill important gaps that would be necessary to complete understanding for field-scale studies. The study of real problems might iterate between, for example, the laboratory and the field. Investigators without access to laboratories licensed to work with radionuclides may propose research with non-radioactive surrogates of radionuclides, or collaborate with a licensed laboratory. Typically, the bioremediation of metals and radionuclides involves, but is not limited to, mobilization and immobilization scenarios. Consideration of organic contaminants, such as solvents and complexing agents that would be important substrates, facilitators, inhibitors, or sources of carbon or electron donors or acceptors, can be included in the proposed research to the extent that they influence the primary goal of understanding the remediation of metals and radionuclides. Applicants are encouraged to review Chemical Contaminants on DOE Lands, DOE/ER–0547T, available at the OBER Homepage: http://www.er.doe.gov/production/ober/EPR/contam.pdf, for a compilation of wastes and waste mixtures at the DOE sites.

NABIR is a research program designed to serve as a foundation for microbial in situ bioremediation techniques. Although ''spillover'' benefits of the research to other cleanup needs such as the use of bioreactors to process waste streams are anticipated, NABIR

emphasizes investigations into bioremediation of subsurface waste sites and their by-products released to the environment. This emphasis includes research that will assist the application of in situ bioremediation in conjunction with other cleanup methods, for example, using bioremediation to mobilize radionuclides so that pump-and-treat techniques could be more effective. Problems characterized by large areas with low-concentration contamination are emphasized over problems of localized, high concentration contamination. Research on phytoremediation will not be supported during this funding period.

In research plans that involve the potential release of chemicals, enzymes, and/or microorganisms to the field (both at contaminated and non-contaminated control sites), applicants must discuss how they will involve the public or stakeholders in their research, beginning with experimental design through completion of the project. All applicants should discuss other relevant societal issues, where appropriate, which may include intellectual property protection, and communication with and outreach to affected communities (including members of affected minority communities where appropriate) to explain the proposed research.

NABIR Infrastructure

The NABIR program anticipates selecting at least one Field Research Center (FRC) located at a DOE site. The FRC will serve as a central facility for researchers to use at their option. However, FRCs will not be identified for at least a year from the date of this solicitation and until National Environmental Policy Act (NEPA) review of the NABIR Program is complete. Applicants may use any available contaminated or uncontaminated field site that is presently available to them, including but not limited to DOE sites. However, investigators are encouraged to consult the listing of current FRC-related field research sites and facilities available to NABIR investigators on the NABIR Homepage, at http://www.lbl.gov/NABIR/research__6.html. Investigators should describe how their research will interface with or transfer to field-scale research at the site they are using, to FRC-related sites, or to the FRC site that will be available in the future. A centrally maintained database will be developed to provide limited information, such as site characterization and kinetics data, that will be needed by a broad segment of investigators. When appropriate, applications must include a short discussion of the Quality Assurance and Quality Control (QA/QC) measures that will be applied in data gathering and analysis activities. Successful applicants will be expected to coordinate their QA/QC protocols with NABIR program personnel. A draft of guidelines to be used by Natural and Accelerated Bioremediation Research (NABIR) program investigators in managing their information and data can be found on the NABIR Homepage: http://www.lbl.gov/NABIR/data-guide.html.

Scientific Research Elements

The following sections describe each of the NABIR scientific research elements that are emphasized in this solicitation. Applicants may propose research that transcends more than one research element; it is also anticipated that many applications could be placed in more than one element. However, each application should identify the one science element most closely aligned with the proposed research, to facilitate scientific review.

Assessment: Current methods for measuring and predicting the effectiveness of bioremediation are inadequate and, in most cases, poorly developed. Demonstrating the effectiveness of bioremediation will require documentation for direct measures, such as alteration of contaminant mobility, or indirect measures, such as accumulation of undesirable by-products. The Assessment program seeks the development of innovative and effective methods to assess:

- Bioremediation rate and activity, including microbial community structure and dynamics, biotransformation processes and rates, and electron flow; and
- Bioremediation endpoints, including not only the concentrations of contaminants and byproducts but also the stability, bioavailability, and toxicity of residual end-products. NABIR will not, however, fund projects that examine human health risks of endpoints.

This element will focus on developing techniques for assessing the bioremedial activities of individual microbial strains and functional groups within a community and on validating existing and emerging laboratory and field techniques. Priority will be given to research applications that could result in techniques and/or instrumentation that: (i) Operate in real time; (ii) operate in field-scale heterogeneous environments; (iii) are cost-effective; and (iv) determine endpoints that more closely approximate limited or non-bioavailability. Research is sought to answer questions such as:

- Can quantitative techniques be adapted or developed for measurement of microbial community structure, movement, activity, and effectiveness during bioremediation?
- How can geophysical, geochemical, and hydrologic properties critical to bioremediation effectiveness be determined?
- What new methods might be developed to interpret complex data sets, including temporal and spatial variability in support of bioremediation management?
- Can bioremediation endpoints that accurately measure bioavailability be quantitatively established?

An important priority is the development of ''core scale'' and field scale technologies to measure viable biomass, community composition, and nutritional status and ''core scale'' interrogation technologies. These technologies would address such items as biogeochemical processes that control mineral and contaminant distribution, metabolic activity (especially low-level), biotransformation rates, and hydraulic and hydrogeochemical variables that control microbial distribution. Priority will be given to new and advanced techniques that are likely to be available for use at the NABIR Field Research Center in two to three years (http://www.lbl.gov/NABIR/research__6.html).

Biotransformation and Biodegradation: The goal of all bioremediation efforts is to reduce the potential toxicity of chemical contaminants in the field by using living organisms or their products to mineralize, degrade, transform, mobilize, or immobilize contaminants. There is already a significant base of knowledge about many pathways for organic chemical degradation, and several important contaminant degradation mechanisms are presently under detailed investigation. However, the understanding of biotransformation and biodegradation pathways and mechanisms in the field is incomplete. Although the degradation of many organic compounds and the biotransformation of some inorganic compounds in laboratory cultures have been well described, it is often unclear how this information relates to bioremediation processes under field conditions. The biotransformation of metals and radionuclides in thick, variably saturated, vadose zones is poorly understood. Successful laboratory studies have not allowed for predictions about the fate of complex chemical mixtures that include metals and radionuclides in the field. It would

be useful to understand: (i) The metabolic pathways taken by mixtures of chemicals in the presence of complex microbial communities in vadose zones and their interfaces with saturated zones and the waste plume; (ii) the kinetics of desirable metal and radionuclide biotransformations and the physicochemical factors affecting the kinetics of those transformations; and (iii) the relationships between microbial cell microenvironments and aqueous geochemistry related to the sequestration, release, precipitation, solubility, organic complexation, or chemical modification (*e.g.*, oxidation/reduction) of metals and radionuclides. Priority will be given to applications for research: (i) Using multiple contaminants; (ii) using microbial consortia; and (iii) on microbial processes that permanently sequester or chemically alter metallic or radioactive constituents of mixed wastes. Research is needed to address questions such as:

- How can laboratory studies, especially those involving interdisciplinary approaches or mixed culture approaches, be used to accurately represent field situations and allow for predictions of chemical fate?
- How important are microbial species interactions in the biotransformation of metals and radionuclides?
- How do organic and inorganic co-contaminants, *i.e.*, mixed wastes, affect the rates of microbial biotransformation of metals and radionuclides?
- What factors control the fates and kinetics of microbial metal and radionuclide biotransformations in vadose and saturated zones?
- What are the critical characteristics of sites where natural biotransformation and biodegradation of mixed metal and radionuclide wastes are occurring that promote these processes?
- Can microbiological processes be harnessed to permanently sequester metals and/or radionuclides in the subsurface?
- What are the metal- and radionuclide-transforming capabilities, including metabolic pathways, of indigenous microorganisms in deep vadose or saturated zones representative of DOE sites?

Community Dynamics and Microbial Ecology: Fundamental research in Community Dynamics and Microbial Ecology at both the molecular and the organismal level is needed to understand better the natural intrinsic processes of bioremediation in mixed contaminant sites. A more complete understanding of energetics at the community level may ultimately provide the ability to control or stimulate communities capable of transformation and to channel carbon flow (including natural- and polluting-organic compounds) through these communities or populations. It is essential to understand the roles and interactions of diverse microbial communities in order to understand how and to what extent the structure of the biological community influences the course of bioremediation and to what extent the environmental factors influence community dynamics in sites containing metals and radionuclides. This need is especially critical to successful bioremediation of diffuse metals and radionuclides in thick vadose and deep saturated zones. Research should be directed toward: (i) Identifying and characterizing microbial communities at contaminated sites; (ii) understanding the dynamics of in situ microbial communities in the presence of metals and radionuclides; (iii) bacterial survival, including toxic effects from metals and radionuclides; and (iv) measuring key microbial metabolic and transformation processes including reduction, oxidation, mobilization/immobilization, and bacterial survival, including bacterial predation. A specific interest is the understanding of bacterial activity in biofilms that can alter contaminants during intrinsic bioremediation and *in situ* biostimulation. Research utilizing column and *in situ* environments is encouraged particularly with non-destructive techniques and real or near-time monitoring.

Particular attention should be given to:

- The distribution, composition and metabolic activity of biofilms particularly at the field scale;
- The ecology and dynamics of microbial communities as a function of local environmental conditions;
- Quantifying the spatial distribution of in situ microbial communities, particularly at the field scale;
- Environmental factors that affect the presence, abundance, and diversity of in situ, subsurface microbial communities; and
- Fluxes of nutrients and electron donors in the saturated/vadose zones across stratigraphic boundaries where differences in microbial activity occur.

System Engineering, Integration, Prediction, and Optimization: This research element primarily supports modeling activities. One goal of the NABIR program is to produce a model or series of models that will help stimulate bioremediation in the field, predict whether bioremediation will be successful and, if so, how to optimize the approach. Models that take advantage of advanced computational tools can be useful for many reasons, including providing a better understanding of the underlying processes, serving as a way to focus attention on the intersection or coupling between processes and subject areas, and identifying priority or rate-limiting processes. One of the distinguishing features of the NABIR program is its emphasis on integrating among the disciplines and research projects. Models can serve as effective tools to improve integration.

This announcement solicits applications that would, at the end of one year of research, define the structure and the content of an integrative model for the NABIR program. However, the investigators would not necessarily construct the model. Instead, they would identify possible data, tools, resources, or information needed for the development of an integrative model. The investigators might, for example, hold workshops or prepare reviews of existing models, including their advantages and limitations. They might identify criteria for a successful integrative model, suggesting parameters for input and output.

Models eventually developed by and for the NABIR program will focus on the in situ bioremediation of metals and radionuclides. An integrative model will include functions such as water flow and transport, chemical and microbiological reactions, as well as peripheral capabilities, such as statistics, geographic information systems, visualization, and uncertainty analysis. The model must be flexible enough to capture and test process models developed in NABIR research projects. Models will be used, in part, to help set future research priorities of the NABIR program by highlighting missing research topics.

The application should describe the manner in which the investigators will interact with the rest of the NABIR research community and the breadth of capability of the investigators proposing the research. It is anticipated that a future solicitation will be offered for the development of an integrative model following the selection of a Field Research Center and on the results of this solicitation. Awards will be made for up to one year. Anticipated levels of funding are $250,000 or less, contingent on the availability of appropriated funds.

Bioremediation and its Societal Implications and Concerns (BASIC): The introduction of non-native or genetically engineered microorganisms or the manipulation of the environment to

change its microbial composition or chemical characteristics may raise concerns among those who live or work nearby. Even the reintroduction of native microorganisms into their natural environment can raise people's concerns. Great care is required to involve the affected communities and stakeholders in any plans to use novel agents and/or processes to remediate a contaminated site. Although it may be many years before work in the NABIR program supports any or all of these activities, it is wise to begin consideration of some of the issues involved now. The Bioremediation and its Societal Implications and Concerns (BASIC) component of the NABIR program is directed at these societal implications of bioremediation.

DOE seeks applications that address effective ways to: (i) Articulate the risks and benefits of in situ bioremediation to stakeholders; and (ii) involve affected communities in bioremediation research and decision making. This can include studies or conferences that will identify and clarify the most urgent issues. It is essential that studies, explorations, and discussions of the societal implications of bioremediation research be firmly grounded in the actual NABIR science. As a result, DOE solicits applications for the preparation and dissemination of educational materials, in any appropriate medium, that will enhance understanding of the scientific as well as the societal aspects of bioremediation among the general public or specified groups. Educational efforts that target specific groups should include a detailed description of the relationship between NABIR and that group or community in addition to assessment measures for determining the effectiveness of the educational effort. DOE also encourages applications for the support of conferences focusing on the legal and societal implications of NABIR.

Applicants should demonstrate their knowledge of any relevant literature and should include detailed plans for the gathering and analysis of factual information and its societal implications. Where appropriate, applicants may make use of relevant activities or field sites where bioremediation experiments are planned or underway. All research applications should address the issue of efficient dissemination of results to the widest appropriate audience. Examples of BASIC issues might include:

- Effective education of stakeholders and others regarding the underlying NABIR science;
- Clarification of public perception of bioremediation issues;
- Past experiences and lessons learned from bioremediation using exogenous or engineered organisms;
- Bioremediation strategies and technologies involving microbes—the experiences of the commercial sector; and
- Intellectual property issues of microbes intended for use in field level bioremediation.

Additional information on the NABIR Program, including those elements which are not a part of this solicitation, is available at the following web site: http://www.lbl.gov/NABIR/. For researchers who do not have access to the world wide web, please contact Ms. Carlson; Environmental Sciences Division, ER–74; U.S. Department of Energy; 19901 Germantown Road; Germantown, MD 20874–1290; phone (301) 903–3338; fax (301) 903–8519; karen.carlson@oer.doe.gov; for hard copies of background material mentioned in this solicitation.

Program Funding

It is anticipated that up to $3 million will be available for multiple awards to be made in FY 1998 in the categories described above, contingent on the availability of appropriated funds. Applications may request project support up to three years, with out-year support contingent on the availability of funds, progress of the research, and programmatic needs. Annual budgets for research projects in the first four scientific research elements are expected to range from $200,000 to $500,000 total costs. Annual budgets for most of the BASIC projects are not expected to exceed $100,000. Researchers are encouraged to team with investigators in other disciplines where appropriate. DOE may encourage collaboration among prospective investigators, to promote joint applications or joint research projects, by using information obtained through other forms of communication.

Collaboration

Applicants are encouraged to collaborate with researchers in other institutions, such as universities, industry, non-profit organizations, federal laboratories and FFRDCs, including the DOE National Laboratories, where appropriate, and to incorporate cost sharing and/or consortia wherever feasible.

Collaborative research applications may be submitted in several ways:

(1) When multiple private sector or academic organizations intend to propose collaborative or joint research projects, the lead organization may submit a single application which includes another organization as a lower-tier participant (subaward) who will be responsible for a smaller portion of the overall project. If approved for funding, DOE may provide the total project funds to the lead organization who will provide funding to the other participant via a subcontract arrangement. The application should clearly describe the role to be played by each organization, specify the managerial arrangements and explain the advantages of the multi-organizational effort.

(2) Alternatively, multiple private sector or academic organizations who intend to propose collaborative or joint research projects may each prepare a portion of the application, then combine each portion into a single, integrated scientific application. A separate Face Page and Budget Pages must be included for each organization participating in the collaborative project. The joint application must be submitted to DOE as one package. If approved for funding, DOE will award a separate grant to each collaborating organization.

(3) Private sector or academic organizations who wish to form a collaborative project with a DOE FFRDC may not include the DOE FFRDC in their application as a lower-tier participant (subaward). Rather, each collaborator may prepare a portion of the proposal, then combine each portion into a single, integrated scientific proposal. The private sector or academic organization must include a Face Page and Budget Pages for its portion of the project. The FFRDC must include separate Budget Pages for its portion of the project. The joint proposal must be submitted to DOE as one package. If approved for funding, DOE will award a grant to the private sector or academic organization. The FFRDC will be funded, through existing DOE contracts, from funds specifically designated for new FFRDC projects. DOE FFRDCs will not compete for funding already designated for private sector or academic organizations. Other Federal laboratories who wish to form collaborative projects may also follow guidelines outlined in this section.

Applications will be subjected to scientific merit review (peer review) and will be evaluated against the following evaluation criteria listed in descending order of importance as codified at 10 CFR 605.10(d):

1. Scientific and/or Technical Merit of the Project
2. Appropriateness of the Proposed Method or Approach
3. Competency of Applicant's Personnel and Adequacy of Proposed Resources

4. Reasonableness and Appropriateness of the Proposed Budget

The evaluation will include program policy factors such as the relevance of the proposed research to the terms of the announcement and an agency's programmatic needs. Note, external peer reviewers are selected with regard to both their scientific expertise and the absence of conflict-of-interest issues. Non-federal reviewers may be used, and submission of an application constitutes agreement that this is acceptable to the investigator(s) and the submitting institution.

To provide a consistent format for the submission, review and solicitation of grant applications submitted under this notice, the preparation and submission of grant applications must follow the guidelines given in the Application Guide for the Office of Energy Research Financial Assistance Program 10 CFR Part 605.

Information about the development, submission of applications, eligibility, limitations, evaluation, the selection process, and other policies and procedures may be found in 10 CFR Part 605, and in the Application Guide for the Office of Energy Research Financial Assistance Program. Electronic access to the Guide and required forms is made available via the World Wide Web at: http://www.er.doe.gov/production/grants/grants.html. On the ER grant face page, form DOE F 4650.2, in block 15, also provide the PI's phone number, fax number and E-mail address. The research description must be 20 pages or less, exclusive of attachments, and must contain an abstract or summary of the proposed research (to include the hypotheses being tested, the proposed experimental design, and the names of all investigators and their affiliations). Attachments include curriculum vitae, QA/QC plan, a listing of all current and pending federal support, and letters of intent when collaborations are part of the proposed research.

Although the required original and seven copies of the application must be submitted, researchers are asked to submit an electronic version of the abstract of the proposed research in ASCII format along with a valid e-mail address to Ms. Karen Carlson by e-mail at karen.carlson@oer.doe.gov. Curriculum vitae should be submitted in a form similar to that of the National Institutes of Health (NIH) or the National Science Foundation (NSF) (two to three pages), for example see: http://www.nsf.gov:80/bfa/cpo/gpg/fkit.htm#forms-9.

The Office of Energy Research, as part of its grant regulations, requires at 10 CFR 605.11(b) that a recipient receiving a grant and performing research involving recombinant DNA molecules and/or organisms and viruses containing recombinant DNA molecules shall comply with NIH ''Guidelines for Research Involving Recombinant DNA Molecules'', which is available via the world wide web at: http://www.niehs.nih.gov/odhsb/biosafe/nih/nih97–1.html (59 FR 34496, July 5, 1994), or such later revision of those guidelines as may be published in the **Federal Register**. Grantees must also comply with other federal and state laws and regulations as appropriate, for example, the Toxic Substances Control Act (TSCA) as it applies to genetically modified organisms. Although compliance with NEPA is the responsibility of DOE, grantees proposing to conduct field research are expected to provide information necessary for the DOE to complete the NEPA review and documentation.

Related Funding Opportunities: Investigators may wish to obtain information about the following related funding opportunities:

Department of Energy, Office of Environmental Management: The Environmental Management Science Program (EMSP). Contact: Mr. Mark Gilbertson, Director, Office of Science and Risk Policy, Office of Science and Technology, EM–52, U.S. Department of Energy, 1000 Independence Avenue, SW, Washington, DC 20585, e-mail mark.gilbertson@em.doe.gov. phone (202) 586–7150. The EMSP home page is available at web site: http://www.em.doe.gov/science/.

DOE/EPA/NSF/ONR Joint Program on Bioremediation, Dr. Robert E. Menzer, U.S. Environmental Protection Agency, National Center for Environmental Research and Quality Assurance, 401 M Street, SW, Washington, DC 20460, menzer.robert@epamail.epa.gov, phone (202) 260–5779.

The Catalog of Federal Domestic Assistance Number for this program is 81.049, and the solicitation control number is ERFAP 10 CFR Part 605.

Issued in Washington, DC, March 18, 1998.

John Rodney Clark,

Associate Director for Resource Management, Office of Energy Research.

[FR Doc. 98–7716 Filed 3–24–98; 8:45 am]

BILLING CODE 6450–01–P

DEPARTMENT OF ENERGY

Federal Energy Regulatory Commission

[Docket No. SA98–36–000]

George B. Angle, d/b/a Frontier Oil Company; Notice of Petition for Adjustment

March 19, 1998.

Take notice that on March 9, 1998, George B. Angle, d/b/a Frontier Oil Company (Angle) filed a petition for adjustment under section 502(c) of the Natural Gas Policy Act of 1978 (NGPA),[1] and an extension of time for dispute resolution, with respect to its Kansas ad valorem tax refund liability under the Commission's September 10, 1997 order in Docket Nos. RP97–369–000, GP97–3–000, GP97–4–000, and GP97–5–000.[2]

The Commission's September 10 order on remand from the D.C. Circuit Court of Appeals[3] directed first sellers under the NGPA to make Kansas ad valorem tax refunds, with interest, for the period from 1983 to 1988. The Commission issued a January 28, 1998 order in Docket No. RP98–39–001, *et al.* (January 28 Order),[4] clarifying the refund procedures, stating that producers could request additional time to establish the uncollectability of royalty refunds, and that first seller may file requests for NGPA section 502(c) adjustment relief from the refund requirement and the timing and procedures for implementing the refunds, based on the individual circumstances applicable to each first seller.

Angle requests authorization, pursuant to the Commission's January 28 order, that the Commission: (1) Extend the time by 90 days from March 9, 1998, in which to obtain the necessary documents and information to determine if the amount of refund set forth in the Statement of Refunds Due (SRD) received from K N Interstate Transmission Company is correct and to reach an agreement on the amount before submitting the dispute to the Commission, and (2) grant an adjustment to its procedures to allow Angle to place into an escrow account the disputed amount of the refund, which at this time is the entire amount under the SRD, and, after resolution of

[1] 15 U.S.C. 3142(c) (1982).

[2] See 80 FERC ¶ 61,264 (1997); order denying reh'g issued January 28, 1998, 82 FERC ¶ 61,058 (1998).

[3] *Public Service Company of Colorado* v. *FERC*, 91 F.3d 1478 (D.C. 1996), cert. denied, Nos. 96–954 and 96–1230 (65 U.S.L.W. 3751 and 3754, May 12, 1997).

[4] 82 FERC ¶ 61,059 (1998).

the dispute, retain in the account (i) principal and interest on amounts attributable to production prior to October 4, 1983, and (ii) interest on all reimbursed principal amounts determined to be in excess of maximum lawful prices (excluding interest retained under (i) above).

Any person desiring to be heard or to make any protest with reference to said petition should on or before 15 days after the date of publication in the **Federal Register** of this notice, file with the Federal Energy Regulatory Commission, 888 First Street, N.E., Washington, D.C. 20426, a motion to intervene or a protest in accordance with the requirements of the Commission's Rules of Practice and Procedure (18 CFR 385.214, 385.211, 385.1105, and 385.1106). All protests filed with the Commission will be considered by it in determining the appropriate action to be taken but will not serve to make the protestants parties to the proceeding. Any person wishing to become a party to a proceeding or to participate as a party in any hearing therein must file a motion to intervene in accordance with the Commission's Rules.

David P. Boergers,

Acting Secretary.

[FR Doc. 98–7779 Filed 3–24–98; 8:45 am]

BILLING CODE 6717–01–M

DEPARTMENT OF ENERGY

Federal Energy Regulatory Commission

[Docket No. RP98–43–017]

ANR Pipeline Company; Notice of Proposed Changes in FERC Gas Tariff

March 19, 1998.

Take notice that, on March 16, 1998, ANR Pipeline Company (ANR) tendered for filing as part of its FERC Gas Tariff, Second Revised Volume No. 1, the following revised tariff sheets, proposed to be effective April 1, 1998:

Seventh Revised Sheet No. 2
Second Revised Sheet No. 187.2
Third Revised Sheet No. 189

ANR states that the purpose of the filing is to implement two provisions of the Stipulation and Agreement (''Settlement'') filed by ANR on October 17, 1997, and approved by Commission order issued February 13, 1998, ANR Pipeline Company, 82 FERC (CCH) ¶ 61,145 (1998).

ANR further states that, in compliance with the Settlement, the revised tariff sheets reflect the removal of the Interruptible Revenue Crediting provision from its tariff, and changes to its Account No. 858 tracker mechanism. The changes reflected on the proposed tariff sheets are the same as the changes shown on the pro forma tariff sheets that were appended to the Settlement.

ANR states that copies of the filing have been mailed to parties on the restricted service list to this proceeding, intervenors, affected customers, and interested state commissions.

Any person desiring to protest this filing should file a protest with the Federal Energy Regulatory Commission, 888 First Street, N.E., Washington, D.C. 20426, in accordance with Section 385.211 of the Commission's Rules and Regulations. All such protests must be filed as provided in Section 154.210 of the Commission's Regulations. Protests will be considered by the Commission in determining the appropriate action to be taken, but will not serve to make protestants parties to the proceedings. Copies of this filing are on file with the Commission and are available for public inspection in the Public Reference Room.

David P. Boergers,

Acting Secretary.

[FR Doc. 98–7752 Filed 3–24–98; 8:45 am]

BILLING CODE 6717–01–M

DEPARTMENT OF ENERGY

Federal Energy Regulatory Commission

[Docket No. PR98–4–001]

AOG Gas Transmission Company, L.P.; Notice of Petition To Partially Withdraw Rate Application, Approve Existing Rate, and Close Docket

March 19, 1998.

Take notice that on March 11, 1998, AOG Gas Transmission Company, L.P. (AOGGT) filed pursuant to Sections 284.123(e) of the Commission's regulations, a petition to the Commission for an order (1) allowing AOGGT to withdraw its pending proposal in this Docket to continue the existing system-wide rate applicable to service provided through its New Mexico system, and (2) approving AOGGT's existing system-wide rate applicable to transportation service rendered from its system in the state of Oklahoma, $0.0019 per MMBtu. This rate will be applicable to the transportation of natural gas under section 311(a)(2) of the Natural Gas Policy Act of 1978 (NGPA).

AOG states that it has or will discontinue the provision of Section 311 transportation services in the State of New Mexico, because of the sale and transfer of its New Mexico facilities to Transwestern Pipeline Company, Conoco, Inc., and El Paso Natural Gas Company during December 1997 and April 1998.

Any person desiring to participate in this proceeding must file a motion to intervene or protest with the Federal Energy Regulatory Commission, 888 First Street, N.E., Washington, D.C. 20426, in accordance with sections 385.211 and 385.214 of the Commission's Rules of Practice and Procedures. All such motions or protests must be filed as provided in Section 154.210 of the Commission's Regulations. All Such motions or protests must be filed on or before April 3, 1998. Protests will be considered by the Commission in determining the appropriate action to be taken, but will not serve to make protestants parties to the proceeding. Copies of this petition are on field with the Commission and are available for public inspection.

David P. Boergers,

Acting Secretary.

[FR Doc. 98–7750 Filed 3–24–98; 8:45 am]

BILLING CODE 6717–01–M

DEPARTMENT OF ENERGY

Federal Energy Regulatory Commission

[Docket No. SA98–35–000]

Lee Banks d/b/a Banks Oil Company; Notice of Petition for Adjustment

March 19, 1998.

Take notice that on March 9,1998, Banks, Lee d/b/a Banks Oil Company (Banks), Suite 550, 500 West Douglas, Wichita, Kansas 67202, filed in Docket No. SA98–35–000 a petition for adjustment pursuant to Section 502(c) of the Natural Gas Policy Act (NGPA) 15 U.S.C. 3412(c) and Rules 1101–1117 of the Commission's Rules of Practice and Procedure (18 CFR 385.1101–385.1117) requesting to be relieved of all refund requests or obligations covering all wells with the exception of the Loewen C well (Panhandle), all as more fully set forth in the petition which is on file with the Commission and open to public inspection.

Banks states that it has adjustment disputes with Northern Natural Gas Company, Panhandle Eastern Pipe Line Company and Colorado Interstate Gas Company.

Banks states further that the request, to be relieved of all refund requests or obligations, is based on the special hardship privileges.

Any person desiring to be heard or to make any protest with reference to said

petition should on or before 15 days after the date of publication in the **Federal Register** of this notice, file with the Federal Energy Regulatory Commission, 888 First Street, NE, Washington, DC 220426, a motion to intervene or a protest in accordance with the requirements of the Commission's Rules of Practice and Procedure (18 CFR 385.214, 385.211, 385.1105, and 385.1106). All protests filed with the Commission will be considered by it in determining the appropriate action to be taken but will not serve to make the protestants parties to the proceeding. Any person wishing to become a party to a proceeding or to participate as a party in any hearing therein must file a motion to intervene in accordance with the Commission's Rules.

David P. Boergers,

Acting Secretary.

[FR Doc. 98–7778 Filed 3–24–98; 8:45 am]

BILLING CODE 6717–01–M

DEPARTMENT OF ENERGY

Federal Energy Regulatory Commission

[Docket No. SA98–54–000]

Lee Banks d/b/a Banks Oil Company; Notice of Petition for Adjustment

March 19, 1998.

Take notice that on March 9, 1998, Lee Banks d/b/a Banks Oil Company (Banks), filed a petition for adjustment under section 502(c) of the Natural Gas Policy Act of 1978 in Docket No. SA98–54–000. Banks requests to be relieved of his obligation to make Kansas ad valorem tax refunds to Panhandle Eastern Pipe Line Company, except for the Loewen ''C'' well, which is still producing. The Commission's September 10, 1997, order in Docket No. RP97–369–000, *et al.*, directed first sellers under the NGPA to make Kansas ad valorem tax refunds, with interest, for the period from 1983 to 1988.

Any person desiring to be heard or to make any protest with reference to said petition should on or before15 days after the date of publication in the **Federal Register** of this notice, file with the Federal Energy Regulatory Commission, 888 First Street, N.E., Washington, D.C., 20426, a motion to intervene or protest in accordance with the requirements of the Commission's Rules of Practice and Procedure (18 CFR 385.214, 385.211, 385.105, and 385.1106). All protests filed with the Commission will be considered by it in determining the appropriate action to be taken but will not serve to make the protestants parties to the proceeding. Any person wishing to become a party to a proceeding or to participate as a party in any hearing therein must file a motion to intervene in accordance with the Commission's Rules.

David P. Boergers,

Acting Secretary.

[FR Doc. 98–7794 Filed 3–24–98; 8:45 am]

BILLING CODE 6717–01–M

DEPARTMENT OF ENERGY

Federal Energy Regulatory Commission

[Docket No. SA98–56–000]

Benson Mineral Group, Inc.; Notice of Petition for Adjustment and Request for Extension of Time

March 19, 1998.

Take notice that on March 9, 1998, Benson Mineral Group, Inc., as First Seller (Benson), filed a petition, pursuant to section 502(c) of the Natural Gas Policy Act of 1978 (NGPA), for an adjustment of the Commission's refund procedures ([15 U.S.C. 4142(c)(1982)] with respect to Benson's Kansas ad valorem tax refund liability. Benson's petition is on file with the Commission and open to public inspection.

The Commission's September 10, 1997, order on remand from the D.C. Circuit Court of Appeals,[1] in Docket No. RP97–369–000, *et al.*,[2] directed first sellers to make Kansas ad valorem tax refunds, with interest, for the period from 1983 to 1988. The Commission clarified the refund procedures in its Order Clarifying Procedures [82 FERC ¶ 61,059 (1998)], stating therein that producers [first sellers] could request additional time to establish the uncollectability of royalty refunds, and that first sellers may file requests for NGPA section 502(c) adjustment relief from the refund requirement and the timing and procedures for implementing the refunds, based on their individual circumstances.

Benson requests an extension of 90 days from March 9, 1998, to allow Benson and Northern Natural Gas Company (Northern) to resolve any dispute as to the proper amount of refund set forth in the Statement of Refunds Due [SRD] received from Northern and make any refunds owing, or to submit such dispute to FERC for resolution if the parties cannot resolve it within such time. Additionally, Benson requests that the Commission grant an adjustment to its procedures to allow Benson to place into an escrow account not only the disputed amount of the refund, but also principal and interest on amounts attributable to production prior to October 4, 1983, and interest on all other amounts claimed to be due under the SRD, in order to stop the accrual of interest pending resolution of disputes and legal issues. Finally, Benson also requests a determination that it has no liability under the SRD except to amounts attributable solely to its own working interest.

Any person desiring to be heard or to make any protest with reference to said petition should on or before 15 days after the date of publication in the **Federal Register** of this notice, file with the Federal Energy Regulatory Commission, 888 First Street, N.E., Washington, D.C. 20426, a motion to intervene or a protest in accordance with the requirements of the Commission's rules of Practice and Procedure (18 CFR 385.214, 385.211, 385.1105, and 385.1106). All protests filed with the Commission will be considered by it in determining the appropriate action to be taken but will not serve to make the protestants parties to the proceeding. Any person wishing to become a party to a proceeding or to participate as a party in any hearing therein must file a motion to intervene in accordance with the Commission's rules.

David P. Boergers,

Acting Secretary.

[FR Doc. 98–7795 Filed 3–24–98; 8:45 am]

BILLING CODE 6717–01–M

[1] *Public Service Company of Colorado* v. *FERC*, 91 F.3d 1478 (D.C. Cir. 1996), *cert. denied*, 65 U.S.L.W. 3751 and 3754 (May 12, 1997)(Nos. 96–954 and 96–1230).

[2] See 80 FERC ¶ 61.264 (1997); *order denying reh'g*, 82 FERC ¶ 61,058 (1998).

DEPARTMENT OF ENERGY

Federal Energy Regulatory Commission

[Docket No. SA98–57–000]

Benson Mineral Group, Inc.; Notice of Petition for Adjustment and Request for Extension of Time

March 19, 1998.

Take notice that on March 9, 1998, Benson Mineral Group, Inc. (BMG) filed a petition for adjustment and a request for extension of time under section 502(c) of the Natural Gas Policy Act of 1978 (NGPA), requesting an adjustment to its obligation to make Kansas ad valorem tax refunds to KN Interstate Gas Transmission Company (KN), all as more fully set forth in the petition which is on file with the Commission and open to public inspection.

It is stated that BMB's petition is filed in response to the Commission's September 10, 1997, order in Docket Nos. RP97–369–000, GP97–3–000, GP97–5–000 [1] on remand from the D.C. Circuit Court of Appeals [2], which directed first sellers under the NGPA to make Kansas ad valorem tax refunds, with interest, for the period from 1983 to 1988.

BMG requests that the Commission grant an adjustment to its procedures to allow First Sellers to place into an escrow account the disputed amount of the refund set forth in the Statement of Refunds Due (SRD) from KN,[3] and, after resolution of the dispute, to retain in the account (a) principal and interest on amounts attributable to production prior to October 4, 1983, and (b) interest on all reimbursed principal amount determined to be refundable as being in excess of maximum lawful prices (excluding interest retained under (a)) above. It is stated that the SRD received from KN was $39,853.44, including interest accrued through November 30, 1997.

BMG also requests an extension of time to permit an additional 90 days to resolve any dispute as to the correct amount of its actual refund liability and to reach an agreement on the amount before submitting the dispute to the Commission.

Any person desiring to be heard or to make any protest with reference to said petition should on or before 15 days after the date of publication in the **Federal Register** of this notice, file with the Federal Energy Regulatory Commission, 888 First Street, N.E., Washington, D.C. 20426, a motion to intervene or a protest in accordance with the requirements of the Commission's Rules of Practice and Procedure (18 CFR 385.214, 385.211, 385.1105, and385.1106). All protests filed with the Commission will be considered by it in determining the appropriate action to be taken but will not serve to make the protestants parties to the proceeding. Any person wishing to become a party to a proceeding or to participate as a party in any hearing therein must file a motion to intervene in accordance with the Commission's Rules.

David P. Boergers,

Acting Secretary.

[FR Doc. 98–7796 Filed 3–24–98; 8:45 am]

BILLING CODE 6717–01–M

[1] See 80 FERC ¶ 61,264 (1997); order denying reh'g issued January 28, 1998, 82 FERC ¶ 61,058 (1998).

[2] *Public Service Company of Colorado* v. *FERC,* 91 F. 3d 1478 (D.C. Cir. 1996), *cert. denied,* 65 U.S.L.W. 3751 and 3754 (May 12, 1997) (Nos. 96–954 and 96–1230).

[3] See Docket No. RP98–53–000.

DEPARTMENT OF ENERGY

Federal Energy Regulatory Commission

[Docket No. SA98–58–000]

Benson Mineral Group, Inc.; Notice of Petition for Adjustment

March 19, 1998.

Take notice that on March 9, 1998, Benson Mineral Group, Inc. (First Seller), filed a petition, pursuant to section 502(c) of the Natural Gas Policy Act of 1978 (NGPA), for an adjustment of the Commission's refund procedures [15 U.S.C. 3142(c) (1982)] with respect to First Seller's Kansas ad valorem tax refund liability. First Seller's petition is on file with the Commission and open to public inspection.

The Commission's September 10 order on remand from the D.C. Circuit Court of Appeals,[1] in Docket No. RP97–369–000, *et al.*,[2] directed first sellers to make Kansas ad valorem tax refunds, with interest, for the period from 1983 to 1988. The Commission clarified the refund procedures in its Order Clarifying Procedures [82 FERC ¶ 61,059 (1998)], stating therein that producers (first sellers) could request additional time to establish the uncollectability of royalty refunds, and that first sellers may file requests for NGPA section 502(c) adjustment relief from the refund requirement and the timing and procedures for implementing the refunds, based on their individual circumstances.

First Seller requests that the Commission: (1) Grant a 90 day extention to allow First Seller and Panhandle Eastern Pipe Line Company (Panhandle) to resolve any dispute as to the proper amount of the refund liability of First Seller for the Kansas ad valorem tax reimbursements set forth in the Statement of Refunds Due (SRD), filed in Docket No. RP98–40–000, and to make refunds or to submit such dispute to FERC for resolution if the parties cannot resolve it within such time, and (2) in order to stop the accrual of interest pending resolution of disputes and legal issues, grant an adjustment to its procedures to allow First Seller to place into escrow account not only any disputed amount of the refund but also principal and interest on amounts attributable to production prior to October 4, 1983, and interest on all other amounts claimed to be due under the SRD. First Seller also requests that it be determined that it has no liability under the SRD except as to amounts attributable solely to its own working interest.

Any person desiring to be heard or to make any protest with reference to said petition should on or before 15 days after the date of publication in the **Federal Register** of this notice, file with the Federal Energy Regulatory Commission, 888 First Street, N.E., Washington, D.C. 20426, a motion to intervene or a protest in accordance with the requirements of the Commission's Rules of Practice and Procedure (18 CFR 385.214, 385.211, 385.1105, and 385.1106). All protests filed with the Commission will be considered by it in determining the appropriate action to be taken but will not serve to make the protestants parties to the proceeding. Any person wishing to become a party to a proceeding or to participate as a party in any hearing therein must file a motion to intervene in accordance with the Commission Rules.

David P. Boergers,

Acting Secretary.

[FR Doc. 98–7797 Filed 3–24–98; 8:45 am]

BILLING CODE 6717–01–M

[1] *Public Service Company of Colorado* v. *FERC,* 91 F.3d 1478 (D.C. Cir. 1996), *cert. denied,* 65 U.S.L.W. 3751 and 3754 (May 12, 1997) (Nos. 96–954 and 96–1230).

[2] See 80 FERC ¶ 61,264 (1997); *order denying reh'g,* issued January 28, 1998, 82 FERC ¶ 61,058 (1998).

DEPARTMENT OF ENERGY

Federal Energy Regulatory Commission

[Docket No. SA98–59–000]

Benson Mineral Group, Inc.; Notice of Petition for Adjustment

March 19, 1998.

Take notice that on March 9, 1998, Benson Mineral Group, Inc. (Benson—First Seller), filed a petition, pursuant to section 502(c) of the Natural Gas Policy Act of 1978 (NGPA), for an adjustment of the Commission's refund procedures [15 U.S.C. 3142(c) (1982)] with respect to Benson's Kansas ad valorem tax refund liability.

The Commission's September 10, 1997 order on remand from the D.C. Circuit Court of Appeals,[1] in Docket No.

[1] *Public Service Company of Colorado* v. *FERC,* 91 F.3d 1478 (D.C. 1996), cert. denied, Nos. 96–954

RP97–369–000 *et al*,[2] directed first sellers to make Kansas ad valorem tax refunds, with interest, for the period from 1983 to 1988. The Commission clarified the refund procedures in its *Order Clarifying Procedures* [82 FERC ¶ 61,059 (1998)], stating therein that producers [first sellers] could request additional time to establish the uncollectability of royalty refunds, and that first sellers may file requests for NGPA Section 502(c) adjustment relief from the refund requirement and the timing and procedures for implementing the refunds, based on their individual circumstances.

Benson requests that the Commission:

(1) Grant an extension of 90 days to allow First Sellers and Williams Natural Gas Company (Williams) to resolve any dispute as to the proper amount of the refund liability of First Sellers for the Kansas ad valorem tax reimbursements set forth in the Statement of Refunds Due (SRD) addressed to First Seller, or to submit such dispute to FERC for resolution if the parties cannot resolve it within such time; and

(2) In order to stop the accrual of interest pending resolution of disputes and legal issues, grant an adjustment to its procedures to allow First Sellers to place into an escrow account not only any disputed amount of the refund by Williams but also principal and interest on amounts attributable to production prior to October 4, 1983, interest on all other amounts claimed to be due under the SRD.

First Seller also requests that it be determined that it has no liability under the SRD except as to amounts attributable solely to its own working interest.

Any person desiring to be heard or to make any protest with reference to said petition should on or before 15 days after the date of publication in the **Federal Register** of this notice, file with the Federal Energy Regulatory Commission, 888 First Street, NE., Washington, DC 20426, a motion to intervene or a protest in accordance with the requirements of the Commission's Rules of Practice and Procedure (18 CFR 385.214, 385.211, 385.1105, and 385.1106). All protests filed with the Commission will be considered by it in determining the appropriate action to be taken but will not serve to make the protestants parties to the proceeding. Any person wishing to become a party to a proceeding or to participate as a party in any hearing therein must file a motion to intervene in accordance with the Commission's Rules.

David P. Boergers,

Acting Secretary.

[FR Doc. 98–7798 Filed 3–24–98; 8:45 am]

BILLING CODE 6717–01–M

and 96–1230 (65 U.S.L.W. 3751 and 3754, May 12, 1997).

[2] See 80 FERC ¶ 61,264 (1997); order denying reh'g issued January 28, 1998, 82 FERC ¶ 61,058 (1998).

DEPARTMENT OF ENERGY

Federal Energy Regulatory Commission

[Docket No. SA98–21–000]

Sally L. Bone; Notice of Petition for Adjustment and Dispute Resolution Request

March 19, 1998.

Take notice that on March 9, 1998, Sally L. Bone (Ms. Bone) filed a petition for adjustment under section 502(c) of the Natural Gas Policy Act of 1978 (NGPA),[1] and a dispute resolution request, with respect to its Kansas ad valorem tax refund liability under the Commission's September 10, 1997 order in Docket Nos. RP97–369–000, GP97–3–000, GP97–4–000, and GP97–5–000.[2]

The Commission's September 10 order on remand from the D.C. Circuit Court of Appeals [3] directed first sellers under the NGPA to make Kansas ad valorem tax refunds, with interest, for the period from 1983 to 1988. The Commission issued a January 28, 1998 order in Docket No. RP98–39–001, *et al.* (January 28 Order),[4] clarifying the refund procedures, stating that producers could request additional time to establish the uncollectability of royalty refunds, and that first seller may file requests for NGPA section 502(c) adjustment relief from the refund requirement and the timing and procedures for implementing the refunds, based on the individual circumstances applicable to each first seller.

Ms. Bone requests that the Commission resolve any potential dispute between Ms. Bone and The Williams Companies, Inc. (Williams), finding that Ms. Bone has no liability for reimbursement of Kansas ad valorem taxes paid over the period 1983 to 1988. In support of her claim of no liability Ms. Bone states the following: (1) She acquired the well in question from the estate of Cloris L. Dale on or about August 24, 1992, therefore not owning any type of interest in the well during the years in question. (2) Cloris L. Dale is deceased and her probate estate was closed on August 14, 1992, and that such claims against Cloris L. Dale's estate are barred. (3) The language of a Final Court Settlement states, All demands against the estate have been paid as authorized by law or by the orders of this Court; the time for filing demands has expired, further stating Sally L. Dale Bone shall be released from any further liability. (4) Ms. Bone further states that Cloris L. Dale did not hold the entire working interest in the well in question, stating that the other working interest was held by one Dale Taylor. Ms. Bone questions if Williams should directly bill Mr. Taylor for his share of the tax reimbursement, as to his working interest.

Based on the above information Ms. Bone believes the monies requested by Williams to be legally uncollectible, and request such relief from the demand by Williams. Ms. Bone asserts that it would be inequitable and unfair for the Commission to require Ms. Bone to make refunds to Williams.

Any person desiring to be heard or to make any protest with reference to said petition should on or before 15 days after the date of publication in the **Federal Register** of this notice, file with the Federal Energy Regulatory Commission, 888 First Street, NE., Washington, DC 20426, a motion to intervene or a protest in accordance with the requirements of the Commission's Rules of Practice and Procedure (18 CFR 385.214, 385.211, 385.1105, and 385.1106). All protests filed with the Commission will be considered by it in determining the appropriate action to be taken but will not serve to make the protestants parties to the proceeding. Any person wishing to become a party to a proceeding or to participate as a party in any hearing therein must file a motion to intervene in accordance with the Commission's Rules.

David P. Boergers,

Acting Secretary.

[FR Doc. 98–7773 Filed 3–24–98; 8:45 am]

BILLING CODE 6717–01–M

[1] 15 U.S.C. 3142(c) (1982).

[2] See 80 FERC ¶ 61,264 (1997); order denying reh'g issued January 28, 1998, 82 FERC ¶ 61,058 (1998).

[3] *Public Service Company of Colorado* v. *FERC*, 91 F.3d 1478 (D.C. 1996), cert. denied, Nos. 96–954 and 96–1230 (65 U.S.L.W. 3751 and 3754, May 12, 1997).

[4] 82 FERC ¶ 61,059 (1998).

DEPARTMENT OF ENERGY

Federal Energy Regulatory Commission

[Docket No. SA98–22–000]

Sally L. Bone; Notice of Petition for Adjustment

March 19, 1998.

Take notice that on March 9, 1998, Sally L. Bone (Mrs. Bone) filed a petition for adjustment under section 502(c) of the Natural Gas Policy Act of 1978 (NGPA),[1] and a dispute resolution request, with respect to its Kansas ad valorem tax refund liability under the Commission's September 10, 1997 order in Docket Nos. GP97–3–000, GP97–4–000, GP97–5–000 , and RP97–369–000.[2] Mrs. Bone's petition is on file with the Commission and open to public inspection.

The Commission's September 10 order on remand from the D.C. Circuit Court of Appeals [3] directed first sellers under the NGPA to make Kansas ad valorem tax refunds, with interest, for the period from 1983 to 1988. The Commission's September 10 order also provided that first sellers could, with the Commission's prior approval, amortize their Kansas ad valorem tax refunds over a 5-year period, although interest would continue to accrue on any outstanding balance.

Mrs. Bone states that the wells in question are the Sudan, Porter, Pinegar, Moyer, Campbell and Williamson located in Kearny County, Kansas. Mrs. Bone owes $104,608.92 to the Enron Corporation (Enron) for the Kansas ad valorem tax refund.

Mrs. Bone states that the Commission will need to resolve a potential dispute between her and Enron as to there being another working interest holder involved in four of the six wells in question. Mrs. Bone objects to paying this person's share of the property tax reimbursement and requests that Enron be ordered to bill the other working interest holder directly. She states that Enron should also bill all royalty interest owners for that person's share of the property tax reimbursement for the same reasons. Mrs. Bone states that Enron made disbursements to all working interest and royalty owners during the time in question.

Mrs. Bone states that she has requested from Enron additional information as to Enron's having made royalty payments directly to royalty interest holders for every well except the Sudan. She is requesting more details on the royalty owners for the entire time in question and based on that information Mrs. Bone can then determine whether any claims against royalty holders are collectible. Mrs. Bone states that a reimbursement was made on May 13, 1986 not January 18, 1986 as Enron had reported and she is requesting that Enron refigure the interest computation from May 13, 1986. Mrs. Bone has requested that Enron investigate the fact that there was another working interest holder in four of the wells. Mrs. Bone has requested more detailed information about the maximum lawful prices determined and was paid for gas during the subject years. Mrs. Bone states that until these questions are satisfactorily resolved, the $104,608.82 will not be paid to Enron. Mrs. Bone requests that the Commission grant staff adjustment and dispute resolution in connection with the Statement of Refunds Due submitted by Enron to her on November 10, 1997. Mrs. Bone states that the sums are in dispute and is asking for a determination that she should not be responsible for the amount until additional information has been received from Enron.

Any person desiring to be heard or to make a protest with reference to said petition should on or before 15 days after the date of publication in the **Federal Register** of this notice, file with the Federal Energy Regulatory Commission, 888 First Street NE., Washington, DC 20426, a motion to intervene or a protest in accordance with the requirements of the Commission's Rules of Practice and Procedure (18 CFR 385.214, 385.211 385.1105, and 385.1106). All protests filed the Commission will be considered by it in determining the appropriate action to be taken but will not serve to make the protestants parties to the proceeding. Any person wishing to become a party to a proceeding or to participate as a party in any hearing must file a motion to intervene in accordance with the Commission's Rules.

David P. Boergers,

Acting Secretary.

[FR Doc. 98–7774 Filed 3–24–98; 8:45 am]

BILLING CODE 6717–01–M

[1] 15 U.S.C. 3142(c) (1982).

[2] See 80 FERC ¶ 61,264 (1997); order denying reh'g issued January 28, 1998, 82 FERC ¶ 61,058 (1998).

[3] *Public Service Company of Colorado* v. *FERC,* 91 F.3d 1478 (D.C. 1996), cert. denied, Nos. 96–954 and 96–1230 (65 U.S.L.W. 3751 and 3754, May 12, 1997) (Public Service).

DEPARTMENT OF ENERGY

Federal Energy Regulatory Commission

[Docket Nos. EC96–19–020 and ER96–1663–021]

California Power Exchange Corporation; Notice of Filing

March 19, 1998.

Take notice that on March 18, 1998, the California Power Exchange Corporation (PX) filed for Commission acceptance in this docket, pursuant to Section 205 of the Federal Power Act, an application to amend the PX Operating Agreement and Tariff (including Protocols) (PX Tariff) and a motion for waiver of the 60-day notice requirement. The PX requests that the proposed PX Tariff amendments be made effective as of the PX operations date because the amendments are needed for initial operations.

The proposed amendments would correct a potential inequity in the PX's Overgeneration procedures that could result from applying the equation included in step 2 of PX Tariff Section 3.3.10 and Section 5.6 of the Bidding and Bid Evaluation Protocol. The proposed amendments would also implement a Congestion Fee regime for Zonal Market Clearing Prices to eliminate a potential ''gaming'' problem that could result from the application of the ISO's Usage Charge. Finally, the amendments would amend Section 2 of the PX Scheduling and Control Protocol to reflect that the deadlines in the timeline may be temporarily amended or suspended during operations.

Any person desiring to be heard or to protest said filing should file a motion to intervene or protest with the Federal Energy Regulatory Commission, 888 First Street, N.E., Washington, D.C. 20426, in accordance with Rules 211 and 214 of the Commission's Rules of Practice and Procedure (18 CFR 385.211 and 18 CFR 385.214). All such motions or protests should be filed on or before March 27, 1998. Protests will be considered by the Commission in determining the appropriate action to be taken, but will not serve to make the protestants parties to the proceeding. Any person wishing to become a party must file a motion to intervene. Copies of this filing are on file with the Commission and are available for public inspection.

David P. Boergers,

Acting Secretary.

[FR Doc. 98–7801 Filed 3–24–98; 8:45 am]

BILLING CODE 6717–01–M

DEPARTMENT OF ENERGY

Federal Energy Regulatory Commission

[Docket No. ER98–1805–000]

Cinergy Operating Companies; Notice of Filing

March 19, 1998.

Take notice that on January 29, 1998, Cinergy Operating Companies tendered for filing an amended quarterly report for the calendar year ending March 31, 1997.

Any person desiring to be heard or to protest said filing should file a motion to intervene or protest with the Federal Energy Regulatory Commission, 888 First Street, NE, Washington, DC 20426, in accordance with Rules 211 and 214 of the Commission's Rules of Practice and Procedure (18 CFR 385.211 and 18 CFR 385.214). All such motions or protests should be filed on or before March 26, 1998. Protests will be considered by the Commission in determining the appropriate action to be taken, but will not serve to make protestants parties to the proceeding. Any person wishing to become a party must file a motion to intervene. Copies of this filing are on file with the Commission and are available for public inspection.

David P. Boergers,

Acting Secretary.

[FR Doc. 98–7747 Filed 3–24–98; 8:45 am]

BILLING CODE 6717–01–M

DEPARTMENT OF ENERGY

Federal Energy Regulatory Commission

[Docket No. RP97–162–006]

Cove Point LNG Limited Partnership; Notice of Tariff Filing

March 19, 1998.

Take notice that on March 16, 1998, Cove Point LNG Limited Partnership (Cove Point) tendered for filing to become a part of Cove Point's FERC Gas Tariff, First Revised Volume No. 1, the following revised tariff sheet to be effective March 16, 1998:

Third Revised Sheet No. 136

Cove Point states that these tariff sheets are being filed to comply with the Commission's May 15, 1997 order granting an extension, to March 16, 1998, to comply with the requirements of Order Nos. 587–B and 587–C that Cove Point establish an Internet server and Internet address for conducting business transactions over the Internet and to establish an Internet Web page for posting certain information.

Cove Point states that copies of the filing were served upon Cove Point's customers and interested state regulatory commissions.

Any person desiring to protest this filing should file a protest with the Federal Energy Regulatory Commission, 888 First Street, N.E., Washington, D.C. 20426, in accordance with Section 385.211 of the Commission's Rules and Regulations. All such protests must be filed as provided in Section 154.210 of the Commission's Regulations. Protests will be considered by the Commission in determining the appropriate action to be taken, but will not serve to make Protestants parties to the proceedings. Copies of this filing are on file with the Commission and are available for public inspection in the Public Reference Room.

David P. Boergers,

Acting Secretary.

[FR Doc. 98–7756 Filed 3–24–98; 8:45 am]

BILLING CODE 6717–01–M

DEPARTMENT OF ENERGY

Federal Energy Regulatory Commission

[Docket No. RP97–20–015]

El Paso Natural Gas Company; Notice of Compliance Filing

March 19, 1998

Take notice that on March 16, 1998, El Paso Natural Gas Company (El Paso) tendered for filing to become part of its FERC Gas Tariff, Second Revised Volume No. 1–A, the following revised tariff sheets to become effective March 1, 1998:

1st Sub Fourth Revised Sheet No. 210
1st Sub Second Revised Sheet No. 210.01
1st Sub Second Revised Sheet No 211
1st Sub 1st Rev Original Sheet No. 211A
1st Sub Fourth Revised Sheet No. 215
1st Sub Third Revised Sheet No. 217
Original Sheet No. 219A

El Paso states that the tariff sheets are being filed here to comply with the Commission's order issued February 13, 1998 in this proceeding.

Any person desiring to protest this filing should file a protest with the Federal Energy Regulatory Commission, 888 First Street, N.E., Washington, D.C. 20426, in accordance with Section 385.211 of the Commission's Rules and Regulations. All such protests must be filed as provided in Section 154.210 of the Commission's Regulations. Protests will be considered by the Commission in determining the appropriate action to be taken, but will not serve to make protestants parties to the proceedings. Copies of this filing are on file with the Commission and are available for public inspection in the Public Reference Room.

David P. Boergers,

Acting Secretary.

[FR Doc. 98–7755 Filed 3–24–98; 8:45 am]

BILLING CODE 6717–01–M

DEPARTMENT OF ENERGY

Federal Energy Regulatory Commission

[Docket No. SA98–15–000]

Mark A. Gower, Notice of Petition for Adjustment

March 19, 1998.

Take notice that on March 6, 1998, Mark A. Gower (Gower) filed a petition for adjustment under section 502(c) of the Natural Gas Policy Act of 1978 (NGPA),[1] requesting to be relieved of his obligation to make Kansas ad valorem tax refunds to Panhandle Eastern Pipe Line Company (Panhandle), with respect to his working interest in certain wells operated by Quinque Operating Company, (Quinque) otherwise required by the Commission's September 10, 1997 order in Docket Nos. RP97–369–000, GP97–3–000, GP97–4–000, and GP97–5–000.[2] Gower's petition is on file with the Commission and open to public inspection.

The Commission's September 10 order on remand from the D.C. Circuit Court of Appeals[3] directed first sellers under the NGPA to make Kansas ad valorem tax refunds, with interest, for the period from 1983 to 1988.

Gower seeks relief on the grounds of extreme financial hardship stating that:

1. From 1977 until 1987, he was a shareholder of Gower Oil, Inc. And sole proprietor of Mark Gower Oil Properties.

2. By 1987, Gower faced foreclosure procedures in which he lost his interest in these two companies being left with no assets or employment.

3. Gower now earns a wage of fourteen dollars an hour and has no assets which would not be exempt from execution.

4. The state of Idaho is pursuing a collection action against Gower for child support in the amount of $92,788.

---

[1] 15 U.S.C. 3142(c) (1982).

[2] See 80 FERC ¶ 61264 (1997); order denying reh'g issued January 28, 1998, 82 FERC ¶ 61, 058 (1998).

[3] *Public Service Company of Colorado* v. *FERC,* 91 F.3d 1478 (D.C. 1996), cert. denied, Nos. 96–954 and 96–1230 (65 U.S.L.W. 3751 and 3754, May 12, 1997) (Public Service).

5. He has no ability to refund the Kansas ad valorem tax reimbursements.

If the Commission does not grant the relief requested Gower requests relief from the payment of any refunds based on the Big E 1–16 Well and the Keating 2–24 Well because tax reimbursement was received by Quinque on those wells for two of the four years on which Panhandle's Statement of Refunds is based. Gower claims that the two wells were deregulated on January 1, 1985 and therefore the refund should not be owed on reimbursements received at a time when the wells were not regulated. Gower also asks for relief from the payment of interest on any principal amount found to be owed by him.

Any person desiring to be heard or to make any protest with reference to said petition should on or before 15 days after the date of publication in the Federal Register of this notice, file with the Federal Energy Regulatory Commission, 888 First Street, N.E., Washington, D.C. 20426, a motion to intervene or a protest in accordance with the requirements of the Commission's Rules of Practice and Procedure (18 CFR 385.214, 385.211, 385.1105, and 385.1106). All protests filed with the Commission will be considered by it in determining the appropriate action to be taken but will not serve to make the protestants parties to the proceeding. Any person wishing to become a party to a proceeding or to participate as a party in any hearing therein must file a motion to intervene in accordance with the Commission's Rules.

David P. Boergers,

Acting Secretary.

[FR Doc. 98–7770 Filed 3–24–98; 8:45 am]

BILLING CODE 6717–01–M

DEPARTMENT OF ENERGY

Federal Energy Regulatory Commission

[Docket No. SA98–48–000]

Graham-Michaelis Corporation; Notice of Petition for Adjustment and Extension of Time

March 19, 1998.

Take notice that on March 9, 1998, Graham-Michaelis Corporation (GMC) and the working interest owners (First Sellers), filed in Docket No. SA98–48–000 a petition for adjustment pursuant to Section 502(c) of the Natural Gas Policy Act (NGPA) 15 U.S.C. 3412(c) and Rules 1101–1117 of the Commission's Rules of Practice and Procedure (18 CFR 385.1101–385.1117) requesting a 90 day extension and to be relieved of all refund requests or obligations, all as more fully set forth in the petition which is on file with the Commission and open to public inspection.

GMC requests a 90 day extension from March 9, 1998, in which to reach an agreement with KN Interstate Gas Transmission Company.

First Sellers requests that it be relieved from any refund obligation claimed and that all escrow funds with its interest then be returned to First Sellers.

Any person desiring to be heard or to make any protest with reference to said petition should or before 15 days after the date of publication in the **Federal Register** of this notice, file with the Federal Energy Regulatory Commission, 999 First Street, N.E., Washington, D.C. 20426, a motion to intervene or a protest in accordance with the requirements of the Commission's Rules of Practice and Procedure (18 CFR 385.214, 385.211, 385.1105, and 385.1106). All protests filed with the Commission will be considered by it in determining the appropriate action to be taken but will not serve to make the protestants parties to the proceeding. Any person wishing to become a party to a proceeding or to participate as a party in any hearing therein must file a motion to intervene in accordance with the Commission's Rules.

David P. Boergers,

Acting Secretary.

[FR Doc. 98–7789 Filed 3–24–98; 8:45 am]

BILLING CODE 6717–01–M

DEPARTMENT OF ENERGY

Federal Energy Regulatory Commission

[Docket No. SA98–49–000]

Graham-Michaelis Corporation; Notice of Petition for Adjustment

March 19, 1998.

Take notice that on March 9, 1998, Applicants, Graham-Michaelis Corporation (GMC) and the working interest owners [1] filed a petition for adjustment under section 502(c) of the Natural Gas Policy Act of 1978 (NGPA),[2] and an extension of time to reach agreement or a dispute resolution request, with respect to its Kansas ad valorem tax refund liability under the Commission's September 10, 1997 order in Docket Nos. RP97–369–000, GP97–3–000, GP97–4–000, and GP97–5–003.[3]

The Commission's September 10 order on remand from the D.C. Circuit Court of Appeals [4] directed first sellers under the NGPA to make Kansas ad valorem tax refunds, with interest, for the period from 1983 to 1988. The Commission issued a January 28, 1998 order in Docket No. RP98–39–001, *et al.* (January 28 Order),[5] clarifying the refund procedures, stating that producers could request additional time to establish the uncollectability of royalty refunds, and that first seller may file requests for NGPA section 502(c) adjustment relief from the refund requirement and the timing and procedures for implementing the refunds, based on the individual circumstances applicable to each first seller.

GMC, on behalf of first sellers for whom it operated (Applicants), requests authorization, pursuant to the Commission's January 28 order, that the Commission: (1) Extend the time by 90 days from March 9, 1998, in which to reach an agreement with Northern Natural Gas Company on the correct amount of the potential refund liability of Applicants and submit any unresolved dispute to the Commission; (2) grant an adjustment to its procedures to allow Applicants to defer payment of principal and interest attributable to royalties for one year until March 9, 1999; and (3) grant an adjustment to the Commission's procedures to allow Applicants to place into an escrow account the amount of the refund which appears presently to be in dispute but which may still be resolved by agreement and (i) amounts attributable to royalty refunds which have not been collected from the royalty owners (principal and interest), (ii) principal and interest on amounts attributable to production prior to October 4, 1983, (iii) interest on royalty amounts which have been recovered from the royalty owners (the principal of which was refunded), and (iv) interest on all reimbursed principal amounts determined to be

[1] Working interest owners are W.A. Michaelis, Jr. Revocable Trust, John L. James Revocable Trust, George D. Rosel Estate, Aikman Oil & Gas Co., CEA Corp., Robert E. Aikman, William H. Aikman, Dail C. West, Graham Enterprises, William L. Graham Revocable Trust, Graham Co., H.R. Michaelis Revocable Trust, David M. Dayvault Revocable Trust, Jack L. Yinger Revocable Trust, K & B Producers, Inc., William Graham, Inc., Chas. A. Neal & Co., March Oil Co., Minatome Corp., Leona P. Maxfield, Lake Forest Academy, and Kaiser-Francis Oil Co.

[2] 15 U.S.C. 3142(c) (1982).

[3] See 80 FERC ¶ 61,264 (1997); order denying reh'g issued January 28, 1998, 82 FERC ¶ 61,058 (1998).

[4] *Public Service Company of Colorado* v. *FERC*, 91 F.3d 1478 (D.C. 1996), cert. denied, Nos. 96–954 and 96–1230 (65 U.S.L.W. 3751 and 3754, May 12, 1997).

[5] 82 FERC ¶61,059 (1998).

refundable as being in excess of maximum lawful prices (excluding interest retained under (i), (ii), and (iii) above).

Any person desiring to be heard or to make any protest with reference to said petition should on or before 15 days after the date of publication in the **Federal Register** of this notice, file with the Federal Energy Regulatory Commission, 888 First Street, N.E., Washington, D.C. 20426, a motion to intervene or a protest in accordance with the requirements of the Commission's Rules of Practice and Procedure (18 CFR 385.214, 385.211, 385.1105, and 385.1106). All protests filed with the Commission will be considered by it in determining the appropriate action to be taken but will not serve to make the protestants parties to the proceeding. Any person wishing to become a party to a proceeding or to participate as a party in any hearing therein must file a motion to intervene in accordance with the Commission's Rules.

David P. Boergers,

Acting Secretary.

[FR Doc. 98–7790 Filed 3–24–98; 8:45 am]

BILLING CODE 6717–01–M

DEPARTMENT OF ENERGY

Federal Energy Regulatory Commission

[Docket No. SA98–50–000]

Graham-Michaelis Corporation; Notice of Petition for Adjustment

March 19, 1998.

Take notice that on March 9, 1998, Graham-Michaelis Corporation (GMC), filed a petition for an adjustment under Section 502(c) of the Natural Gas Policy Act of 1978 (NGPA 15 U.S.C. 3412(c)) and Rules 1101–1117 of the Commission's Rules of Practice and Procedure (18 CFR 385.1101–385.1117), wherein GMC requested, on behalf of first sellers (First Sellers) [1] for whom it operated, that the Commission: (1) Extend the time by 90 days from March 9, 1998, in which to reach an agreement with Panhandle Eastern Pipeline Company on the correct amount of the potential refund liability of First Sellers and submit any unresolved dispute to the Commission; (2) grant an adjustment to the Commission's procedures to allow First Sellers to place into an escrow account the amount of refund which appears presently to be in dispute but which may still be resolved by agreement (i) principal and interest on amounts attributable to production prior to October 4, 1983, and (ii) interest on all reimbursed principal amounts determined to be refundable as being in excess of maximum lawful prices (excluding interest retained under (i) above); and (3) grant them relief from refund liability as to one of the wells for which ad valorem tax reimbursements were made. GMC also requests that it be determined that it was not a working interest owner or first seller and that it therefore has no liability under the Statement of Refunds Due SRD.[2]

Any person desiring to be heard or to make any protest with reference to said petition should on or before 15 days after the date of publication in the **Federal Register** of this notice, file with the Federal Energy Regulatory Commission, 888 First Street, N.E., Washington, D.C. 20426, a motion to intervene or a protest in accordance with the requirements of the Commission's Rules of Practice and Procedure (18 CFR 385.214, 385.211, 385.1105, and 385.1106). All protests filed with the Commission will be considered by it in determining the appropriate action to be taken but will not serve to make the protestants parties to the proceeding. Any person wishing to become a party to a proceeding or to participate as a party in any hearing therein must file a motion to intervene in accordance with the Commission's Rules.

David P. Boergers,

Acting Secretary.

[FR Doc. 98–7791 Filed 3–24–98; 8:45 am]

BILLING CODE 6717–01–M

[1] First sellers are W.A. Michaelis, Jr. Revocable Trust, John L. James Revocable Trust, Dial C. West, Graham Enterprises, William L. Graham Revocable Trust, Betty Harrison Graham Revocable Trust, M.D. Michaelis, GrahamCo, William Graham, Inc., H.R. Michaelis Revocable Trust, David M. Dayvault Revocable Trust, Jack L. Yinger Revocable Trust, Paula Sue Bricker, Graham Petroleum, Inc., Chas. A. Neal & Company, and March Oil Company.

[2] See Docket No. RP98–40–000.

DEPARTMENT OF ENERGY

Federal Energy Regulatory Commission

[Docket No. SA98–42–000]

Leo Helzel; Notice of Petition for Adjustment

March 19, 1998.

Take notice that on March 9, 1998, Leo Helzel (Helzel), filed a petition for adjustment under section 502(c) of the Natural Gas Policy Act of 1978 in Docket No. SA98–42–000. Helzel requests an extension of time of 90 days to allow himself and Northern Natural Gas Company (Northern) to resolve any dispute as to the proper amount of the refund liability for the Kansas ad valorem tax reimbursements set forth in the Statement of Refunds Due (SRD) addressed to Benson Mineral Group, Inc. (BMG), the Operator, or to submit such dispute to FERC for resolution if the parties cannot resolve the dispute within such time. Helzel also requests an adjustment to the Commission's procedures to allow him to place into an escrow account not only any disputed amount of the refund amount calculated by Northern but also principal and interest on amount calculated by Northern but also principal and interest on amounts attributable to production prior to October 4, 1983 and interest on all other amounts claimed to be due under the SRD. The Commission's September 10, 1997, order in Docket No. RP97–369–000, *et al.*, directed first sellers under the NGPA to make Kansas ad valorem tax refunds, with interest, for the period from 1983 to 1988.

Any person desiring to be heard or to make any protest with reference to said petition should on or before 15 days after the date of publication in the **Federal Register** of this notice, file with the Federal Energy Regulatory Commission, 888 First Street, N.E., Washington, D.C. 20426, a motion to intervene or protest in accordance with the requirements of the Commission's Rules of Practice and Procedure (18 CFR 385.214, 385,211, 385.105, and 385.1106). All protests filed with the Commission will be considered by it in determining the appropriate action to be taken but will not serve to make the protestants parties to the proceeding. Any person wishing to become a party to a proceeding or to participate as a party in any hearing therein must file a motion to intervene in accordance with the Commission's Rules.

David P. Boergers,

Acting Secretary.

[FR Doc. 98–7784 Filed 3–24–98; 8:45 am]

BILLING CODE 6717–01–M

DEPARTMENT OF ENERGY

Federal Energy Regulatory Commission

[Docket No. SA98–40–000]

Human Corporation; Notice of Petition for Adjustment and Extension of Time

March 19, 1998.

Take notice that on March 9, 1998, Human Corporation (Applicant) and working interest owners (First Sellers), filed in Docket No. SA98–40–000 a petition for adjustment pursuant to

Section 502(c) of the Natural Gas Policy Act 15 U.S.C. 3412(c) and Rules 1101–1117 of the Commission's Rules of Practice and Procedure (18 CFR 385.1101–385.1117) requesting, a 90-day extension to make refunds, an adjustment to its procedures to defer payment of principal and interest for one year, and an adjustment to its procedures to defer payment of principal and interest for one year, and an adjustment to its procedures to stop the accruing of interest, all a more fully set forth in the petition which is on file with the Commission and open to public inspection.

Specifically, First Sellers requests that the Commission: (1) grant a 90-day extension to try to resolve any disputes as to the proper amount of the refund liability for the Kansas *ad valorem* tax reimbursements and to make refunds or to submit such dispute to the Commission for resolution if the parties cannot resolve the dispute within such time; (2) grant an adjustment to its procedures to allow First Sellers to defer payment of principal and interest attributable to royalties for one year; and (3) grant an adjustment to its procedures to allow First Sellers to place into an escrow account not only any disputed amount of the refund but also, (i) principal and interest attributable to royalty refunds which have not been collected from royalty owners; (ii) principal and interest on amounts attributable to production prior to October 4, 1983; and (iii) interest on all other principal claimed to be due under the SRD.

Applicant requests that it not be determined a working interest owner or First Seller of any of the production with respect to which the tax reimbursement were made and that it therefore has no liability under the SRD. Applicant states that it owned no working interest in the wells for which claims for refunds have been made and is therefore not directed by the September 10 Order. As such, Applicant states that it has no refund liability for the reimbursements listed in the SRD and requests a determination to that fact.

Any person desiring to be heard or to make any protest with reference to said petition should on or before 15 days after the date of publication in the **Federal Register** of this notice, file with the Federal Energy Regulatory Commission, 888 First Street, N.E., Washington, D.C. 20426, a motion to intervene or a protest in accordance with the requirements of the Commission's Rules of Practice and Procedure (18 CFR 385.214, 385.211, 385.1105, and 385.1106). All protests filed with the Commission will be considered by it in determining the appropriate action to be taken but will not serve to make the protestants parties to the proceeding. Any person wishing to become a party to a proceeding or to participate as a party in any hearing therein must file a motion to intervene in accordance with the Commission's Rules.

David P. Boergers,

Acting Secretary.

[FR Doc. 98–7782 Filed 3–24–98; 8:45 am]

BILLING CODE 6717–01–M

DEPARTMENT OF ENERGY

Federal Energy Regulatory Commission

[Docket No. SA98–41–000]

Hummon Corporation; Notice of Petition for Adjustment

March 19, 1998.

Take notice that on March 9, 1998, Hummon Corporation (Hummon), 950 N. Tyler Road, Wichita, Kansas 6721–3240, filed a petition for adjustment under section 502(c) of the Natural Gas Policy Act of 1978 (NGPA),[1] requesting, on behalf of first sellers (First Sellers)[2] for whom it operated, that the Commission, *inter alia*, grant Hummon a 90-day extension for making refunds so First Sellers and Panhandle Eastern Pipe Line Company (Panhandle) could resolve any dispute as to the proper amount of First Sellers' refund liability for the Kansas *ad valorem* tax reimbursements set forth in the Statement of Refunds Due (SRD)[3] and to make refunds or to submit such dispute to the Commission for resolution if the parties cannot resolve it within such time, all as more fully set forth in the petition which is open to the public for inspection.

Hummon also requests that the Commission grant an adjustment to its procedures to allow First Sellers to defer payment of principal and interest attributable to royalties for one year. Hummon further requests that the Commission, in order to stop the accrual of interest pending resolution of disputes and legal issues, grant an adjustment to the Commission's procedures to allow First Sellers to place into an escrow account not only any disputed amount of the refund, but also (1) principal and interest attributable to royalty refunds which have not been collected from royalty owners; (2) principal and interest on amounts attributable to production prior to October 4, 1983; and (3) interest on all other principal amounts claimed to be due under the SRD.

Hummon also requests that the Commission determine that Hummon was not a working interest owner or first seller of any of the production with respect to which the tax reimbursements were made and that it therefore has no liability under the SRD.

Any person desiring to be heard or to make any protest with reference to said petition should on or before 15 days after the date of publication in the **Federal Register** of this notice, file with the Federal Energy Regulatory Commission, 888 First Street, N.E., Washington, D.C. 20426, a motion to intervene or a protest in accordance with the requirements of the Commission's Rules of Practice and Procedure (18 CFR 385.214, 385.211, 385.1105, and 385.1106). All protests filed with the Commission will be considered by it in determining the appropriate action to be taken but will not serve to make the protestants parties to the proceeding. Any person wishing to become a party to a proceeding or to participate as a party in any hearing therein must file a motion to intervene in accordance with the Commission's Rules.

David P. Boergers,

Acting Secretary.

[FR Doc. 98–7783 Filed 3–21–98; 8:45 am]

BILLING CODE 6717–01–M

[1] 15 U.S.C. 3143(c) (1982).

[2] First Sellers are identified as: George C. Berryman, Donald M. Brod, Phyllis E. Brod Trust, Robert A. Clark, Floyd D. Crockett, Roy B. Henderson, George C. Hill, Bryon E. Hummon, Jr., John L. Kiser, Willard J. Kiser, William Mowery Trust, Anne B. Porter Berryman, Alan Sturm, and Arthur Vara, Jr.

[3] Hummon states that Panhandle's SRD claims $11,440.19 for 100 percent of the tax reimbursements, including interest through March 9, 1998.

DEPARTMENT OF ENERGY

Federal Energy Regulatory Commission

[Docket No. SA98–28–000]

Kaiser-Francis Oil Company; Notice of Petition for Adjustment

March 19, 1998.

Take notice that on March 9, 1998, Kaiser-Francis Oil Company (Kaiser) filed a petition for adjustment under section 502(c) of the Natural Gas Policy act of 1978 (NGPA),[1] requesting a one-year extension of the deadline for making refunds as to royalties and requesting that the Commission grant a procedural adjustment to allow it to

[1] 15 U.S.C. 3142(c) (1982).

place into an escrow account the interest on the total principle amount attributable to Kaiser's working interest. The March 9, 1998, deadline was established for first sellers to remit refunds of Kansas ad valorem taxes to their pipeline purchasers, as required by the Commission's September 10, 1997 order in Docket Nos. GP97–3–000, GP97–4–000, GP97–5–000, and RP97–369–000.[2] Kaiser's petition is on file with the Commission and open to public inspection.

The Commission's September 10 order on remand from the D.C. Circuit Court of Appeals[3] directed first sellers under the NGPA to make Kansas ad valorem tax refunds, with interest, for the period from 1983 to 1988. The Commission issued a January 28, 1998 order in Docket No. RP98–39–001, *et al.* (January 28 Order),[4] clarifying the refund procedures, stating that producers could request additional time to establish the uncollectability of royalty refunds, and that first seller may file requests for NGPA section 502(c) adjustment relief from the refund requirement and the timing and procedures for implementing the refunds, based on the individual circumstances applicable to each first seller.

Kaiser states it is substantially and adversely affected by the potential Kansas ad valorem tax refund requirement. Kaiser is not seeking to relieve itself of that refund obligation. Rather Kaiser seeks to establish procedures which ensure: (a) That it pays only that which is legitimately owed; and (b) that if it is subsequently determined that its refund liability was less than that originally claimed by Anadarko Petroleum Company (Anadarko) in Docket No. RP98–43–000, it can recover the overpayment. Accordingly, Kaiser requests an adjustment to the general refund procedures to permit it to pay the following amount into an escrow account: the interest on the principal amount attributable to Kaiser's working interest, totaling $19,816.78.

Kaiser states that although there are issues relating to portions of the principal refunds which are pending before the court,[5] to demonstrate its good faith in these proceedings Kaiser has paid the principal amount of refunds attributable to Kaiser's working interest in the amount of $10,169.99 to Anadarko. Should the Commission provide assurances that Kaiser will be able to recover any overpayments without having to initiate a prompt return of refund amounts determined not to be due (such return of refunds not dependent upon recovery from consumers), Kaiser would agree to waive this request for escrowing certain monies. Without such assurances, Kaiser is entitled to have its property protested until the issue of liability has been fully resolved in Court or Congress.

Any person desiring to be heard or to make any protest with reference to said petition should on or before 15 days after the date of publication in the Federal Register of this notice, file with the Federal Energy Regulatory Commission, 888 First Street, N.E., Washington, D.C. 20426, a motion to intervene or a protest in accordance with the requirements of the Commission's Rules of Practice and Procedure (18 CFR 385.214, 385.211, 385.1105, and 385.1106). All protests filed with the Commission will be considered by it in determining the appropriate action to be taken but will not serve to make the protestants parties to the proceeding. Any person wishing to become a party to a proceeding or to participate as a party in any hearing therein must file a motion to intervene in accordance with the Commission's Rules.

David P. Boergers,

Acting Secretary.

[FR Doc. 98–7776 Filed 3–24–98; 8:45 am]

BILLING CODE 6717–01–M

[2] See 80 FERC ¶ 61,264 (1997); order denying reh'g issued January 28, 1998, 82 FERC ¶ 61,058 (1998).

[3] *Public Service Company of Colorado* v. *FERC,* 91 F.3d 1478 (D.C. 1996), cert. denied, Nos. 96–954 and 96–1230 (65 U.S.L.W. 3751 and 3754, May 12, 1997).

[4] 82 FERC ¶ 61,059 (1998).

[5] See, Case No. 98–60043, Untied States Court of Appeals for the Fifth Circuit in *Anadarko Petroleum Corp.* v. *FERC,* and *Union Pacific Resources Company* v. *FERC.*

DEPARTMENT OF ENERGY

Federal Energy Regulatory Commission

[Docket No. SA98–30–000]

Kaiser-Francis Oil Company; Notice of Petition for Adjustment

March 19, 1998.

Take notice that on March 9, 1998, Kaiser-Francis Oil Company (Kaiser-Francis) filed a petition for adjustment under section 502(c) of the Natural Gas Policy Act of 1978 (NGPA),[1] requesting that the refund procedures in the Commission's September 10, 1997 order in Docket Nos. RP97–369–000, GP97–3–000, GP97–4–000, and GP97–5–000,[2] be altered with respect to Kaiser-Francis' Kansas ad valorem tax refund liability.

The Commission's September 10 order on remand from the D.C. Circuit Court of Appeals[3] directed first sellers under the NGPA to make Kansas ad valorem tax refunds, with interest, for the period from 1983 to 1988. The Commission issued a January 28, 1998 order in Docket No. RP98–39–001, *et al.* (January 28 Order),[4] clarifying the refund procedures, stating that producers could request additional time to establish the uncollectability of royalty refunds, and that first seller may file requests for NGPA section 502(c) adjustment relief from the refund requirement and the timing and procedures for implementing the refunds, based on the individual circumstances applicable to each first seller.

Kaiser-Francis requests authorization, pursuant to the Commission's January 28 Order, to defer payment to Williams Natural Gas Company (Williams) of principal and interest refunds attributable to unrecovered royalties for one year until March 9, 1999. In addition, Kaiser-Francis requests that it be allowed to place into an escrow account during the requested 1-year deferral period: (1) An amount equal to the principal and interest on royalty refunds which have not been recovered; (2) an amount equal to the interest on royalty refunds recovered (the principal of which was paid to Williams (to protect the interests of royalty owners); and (3) an amount equal to the interest on the total remaining amount of refunds allegedly due (i.e., the interest due on principal), excluding royalties.

Kaiser-Francis argues that it seeks to establish these procedures to ensure that it pays only that which is legitimately owed, and that it will be able to recover the overpayment, if it is subsequently determined that Kaiser-Francis's refund liability was less than that originally claimed by Williams. Kaiser-Francis asserts that a one-year deferral in the obligation to make royalty refunds is necessary in order to allow it to confirm the appropriate refund amounts due, to attempt to locate the prior royalty owners, and to seek recovery of such amounts from the proper royalty owners.

[1] 15 U.S.C. 3142(c) (1982).

[2] See 80 FERC ¶ 61,264 (1997); order denying reh'g issued January 28, 1998, 82 FERC ¶ 61,058 (1998).

[3] *Public Service Company of Colorado* v. *FERC,* 91 F.3d 1478 (D.C. 1996), cert. denied, Nos. 96–954 and 96–1230 (65 U.S.L.W. 3751 and 3754, May 12, 1997).

[4] 82 FERC ¶ 61,059 (1998).

On or before March 9, 1999, Kaiser-Francis proposes to file documentation with the Commission, of those royalties which were not collectible and disburse the recovered royalty refund principal only to Williams. Until that time, Kaiser-Francis proposes to place the interest from royalty refunds which was recovered in its escrow account to protect the royalty owners. In addition, Kaiser-Francis argues that its proposal for an escrow account is necessary to protect its property and that of its royalty owners.

Any person desiring to be heard or to make any protest with reference to said petition should on or before 15 days after the date of publication in the **Federal Register** of this notice, file with the Federal Energy Regulatory Commission, 888 First Street, N.E., Washington, D.C. 20426, a motion to intervene or a protest in accordance with the requirements of the Commission's Rules of Practice and Procedure (18 CFR 385.214, 385.211, 385.1105, and 385.1106). All protests filed with the Commission will be considered by it in determining the appropriate action to be taken but will not serve to make the protestants parties to the proceeding. Any person wishing to become a party to a proceeding or to participate as a party in any hearing therein must file a motion to intervene in accordance with the Commission's Rules.

David P. Boergers,

Acting Secretary.

[FR Doc. 98–7777 Filed 3–24–98; 8:45 am]

BILLING CODE 6717–01–M

DEPARTMENT OF ENERGY

Federal Energy Regulatory Commission

[Docket No. SA98–51–000]

Kansas Petroleum, Inc.; Notice of Petition for Adjustment

March 19, 1998.

Take notice that on March 9, 1998, Kansas Petroleum, Inc. (KPI), James E. Rhude, E.N. Diderich Trust, and Rhude & Fryberger, Inc., collectively referred to as Applicants, filed a petition for adjustment under section 502(c) of the Natural Gas Policy Act of 1978 (NGPA), requesting that the refund procedures in the Commission's September 10, 1997, order in Docket Nos. RP97–369–000, GP97–3–000, GP97–4–000, and GP97–5–000,[1] be altered with respect to Applicant's Kansas ad valorem tax refund liability.

The Commission's September 10 order on remand from the D.C. Circuit Court of Appeals[2] directed first sellers under the NPGA to make Kansas ad valorem tax refunds, with interest, for the period from 1983 to 1988. The Commission issued a January 28, 1998 order in Docket No. RP98–39–001, *et al.* (January 28 Order),[3] clarifying the refund procedures, stating that producers could request additional time to establish the uncollectability of royalty refunds, and that first sellers may file requests for NGPA section 502(c) adjustment relief from the refund requirement and the timing and procedures for implementing the refunds, based on the individual circumstances applicable to each first seller.

Applicants request that the Commission pursuant to the Commission's January 28 order, (1) grant an extension of 60 days to make refunds to allow Applicants and Colorado Interstate Gas Company (CIG) to reach an agreement of the correct amount of the potential refund liability of Applicants and submit any unresolved dispute to the Commission; (2) to grant an adjustment to its procedures to allow to defer payment to CIG of principal and interest refunds attributable to royalties for one year until March, 9, 1999, and (3) to grant adjustment to its procedures to allow Applicants to place into an escrow account during the requested 1-year deferral period the amount of the refund which is in dispute if there is a dispute and also (i) an amount equal to the royalty refunds which have not been collected from royalty owners (principal and interest), (ii) principal and interest on amounts attributable to production prior to October 4, 1983, (iii) interest on royalty amounts which have been recovered from the royalty owners (principal of which was refunded) and (iv) interest on all reimbursed principal amounts determined to be refundable as being in excess of maximum lawful prices (excluding interest retained under (i), (ii), and (iii) above.

Applicants also request that, if retaining these funds in escrow is not permitted, the Commission adopt other procedures requiring CIG to repay to Applicants, with interest, any of the amounts paid to them from escrow which subsequently are determined to have been a part of their refund obligation.

Any person desiring to be heard or to make any protest with reference to said petition should on or before 15 days after the date of publication in the **Federal Register** of this notice, file with the Federal Energy Regulatory Commission, 888 First Street, N.E., Washington, D.C. 20426, a motion to intervene or a protest in accordance with the requirements of the Commission's Rules of Practice and Procedure (18 CFR 385.214, 385.211, 385.1105, and 385.1106). All protests filed with the Commission will be considered by it in determining the appropriate action to be taken but will not serve to make the Protestants parties to the proceeding. Any person wishing to become a party to a proceeding or to participate as a party in any hearing therein must file a motion to intervene in accordance with the Commission's Rules.

David P. Boergers,

Acting Secretary.

[FR Doc. 98–7792 Filed 3–24–98; 8:45 am]

BILLING CODE 6717–01–M

[1] See 80 FERC ¶ 61,264 (1997); order denying reh'g issued January 28, 1998, 82 FERC ¶ 61,058 (1998).

[2] *Public Service Company of Colorado* v. *FERC,* 91 F.3d 1478 (D.C. 1996), cert. denied, Nos. 96–954 and 96–1230 (65 U.S.L.W. 3751 and 3754, May 12, 1997).

[3] 82 FERC ¶ 61,059 (1998).

DEPARTMENT OF ENERGY

Federal Energy Regulatory Commission

[Docket No. SA98–52–000]

Kansas Petroleum, Inc.; Notice of Petition for Adjustment

March 19, 1998.

Take notice that on March 9, 1998, Kansas Petroleum, Inc., E.N. Diderich Trust, James E. Rhude, and Rhude & Fryberger, Inc. (Applicants), filed in Docket No. SA98–52–000 a petition for adjustment pursuant to Section 502(c) of the Natural Gas Policy Act 15 U.S.C. 3412(c) and Rules 1101–1117 of the Commission's Rules of Practice and Procedure (18 CFR 385.1101–385.1117) requesting to be relieved from any further refund liability not heretofore paid for the Kansas *ad valorem* tax reimbursements set forth in a Statement of Refunds Due submitted to Kansas Petroleum, Inc. by KN Interstate Transmission Co. Pending determination of this request, Applicants also request that they be permitted to place in an escrow account the amount of interest on the refund liability as calculated by them, all as more fully set forth in the petition which is on file with the Commission and open to public inspection.

Applicants state that, in a Settlement Agreement dated January 16, 1989, with

K N Energy, Inc., reimbursement have already been made for the 14 wells involved. As such, Applicants ask that the mutual release be fully enforced and that Applicants be released of refund liability as to total refund amount, both principal and interest. However, Applicants state that they are willing to refund and have refunded the principal of the excess reimbursements in accordance with their calculations. Also, Applicants indicate that the interest on the refunds creates a hardship and are unfair. Applicants are depositing in an escrow account the amount of interest on their principal liability and ask that their deposit of funds into the escrow account be approved.

Any person desiring to be heard or to make any protest with reference to said petition should on or before 15 days after the date of publication in the **Federal Register** of this notice, file with the Federal Energy Regulatory Commission, 888 First Street, N.E., Washington, D.C. 20426, a motion to intervene or a protest in accordance with the requirements of the Commission's Rules of Practice and Procedure (18 CFR 385.214, 385.211, 385.1105, and 385.1106). All protests filed with the Commission will be considered by it in determining the appropriate action to be taken but will not serve to make the protestants parties to the proceeding. Any person wishing to become a party to a proceeding or to participate as a party in any hearing therein must file a motion to intervene in accordance with the Commission's Rules.

David P. Boerges,

Acting Secretary.

[FR Doc. 98–7793 Filed 3–24–98; 8:45 am]

BILLING CODE 6717–01–M

DEPARTMENT OF ENERGY

Federal Energy Regulatory Commission

[Docket No. RP98–160–000]

Koch Gateway Pipeline Company; Notice of Proposed Changes in FERC Gas Tariff

March 19, 1998.

Take notice that on March 16, 1998, Koch Gateway Pipeline Company (Koch) tendered for filing as part of its FERC Gas Tariff, Fifth Revised Volume No. 1, Ninth Revised Sheet No. 1412, with an effective date of April 16, 1998.

Koch proposes an addition to Section 7.5(a) of the General Terms and Conditions regarding payments for firm transportation service requests. Section 7.5(a) requires Customers requesting firm transportation service to make a prepayment to Koch. This amount is credited back to the Customer once service commences or in the event Koch determines it is unable to provide the service. Koch proposes adding a provision reserving the right to waive this requirement on a non-discriminatory basis for any Customer who has paid transportation charges in an amount equal to or greater than the required payment during each of the three months prior to the request.

Section 7.5(a) is intended to prevent unnecessary requests for firm transportation service and therefore avoid unnecessary costs. Koch seeks to relieve established shippers and itself of the burden related to administering this provision while still maintaining a level of protection from such requests.

Any person desiring to be heard or to protest this filing should file a motion to intervene or a protest with the Federal Energy Regulatory Commission, 888 First Street, N.E., Washington, D.C. 20426, in accordance with Sections 385.214 and 385.211 of the Commission's Rules and Regulations. All such motions or protests must be filed as provided in Section 154.210 of the Commission's Regulations. Protests will be considered by the Commission in determining the appropriate action to be taken, but will not serve to make protestants parties to the proceedings. Any person wishing to become a party must file a motion to intervene. Copies of this filing are on file with the Commission and are available for public inspection in the Public Reference Room.

David P. Boergers,

Acting Secretary.

[FR Doc. 98–7757 Filed 3–24–98; 8:45 am]

BILLING CODE 6717–01–M

DEPARTMENT OF ENERGY

Federal Energy Regulatory Commission

[Docket No. SA98–17–000]

Midgard Energy Company; Notice of Petition for Adjustment

March 19, 1998.

Take notice that on March 6, 1998, Midgard Energy Company (Midgard) filed a petition for adjustment under section 502(c) of the Natural Gas Policy Act of 1978 (NGPA),[1] requesting the grant of a procedural adjustment in connection with its refund liability to Panhandle Eastern Pipe Line Company (Panhandle) for reimbursement of Kansas ad valorem taxes, as required by the Commission's September 10, 1997 order in Docket Nos. GP97–3–000, GP97–4–000, GP97–5–000, RP97–369–000.[2] This petition is on file with the Commission and open to public inspection.

The Commission's September 10 order on remand from the D.C. Circuit Court of Appeals[3] directed first sellers under the NGPA to make Kansas ad valorem tax refunds, with interest, for the period from 1983 to 1988. The Commission clarified the refund procedures in its Order in Northern Natural Gas Company,[4] stating that it would grant extension of the refund due date for royalty refunds if a producer requests such an extension. In addition, the Commission indicated in its January 28th Order that it would consider adjustment requests as to the refund amounts and the refund procedures.

Midgard requests authorization to place into an escrow account both the principal and interest on pre-October 3, 1983 production and the interest on its remaining refunds to Panhandle. Midgard argues that it seeks to establish this procedure to ensure that it pays only that which is legitimately owed, and that if it is subsequently determined that it has no refund liability for interest or pre-October 3, 1983, production, it can recover the overpayment.

Any person desiring to be heard or to make any protest with reference to said petition should on or before 15 days after the date of publication in the **Federal Register** of this notice, file with the Federal Energy Regulatory Commission, 888 First Street, N.E., Washington D.C. 20426, a motion to intervene or a protest in accordance with the requirements of the Commission's Rules of Practice and Procedure (18 CFR 385.214, 385.211, 385.1105, and 385.1106). All protests filed with the Commission will be considered by it in determining the appropriate action to be taken but will not serve to make the protestants parties to the proceeding. Any person wishing to become a party to a proceeding or to participate as a party in any hearing therein must file a motion to intervene

[1] 15 U.S.C. 3142(c) (1982).

[2] See 80 FERC ¶61,264 (1997); order denying reh'g issued January 28, 1998, 82 FERC ¶61,058 (1998).

[3] *Public Service Company of Colorado* v. *FERC*, 91 F.3d 1478 (D.C. 1996), cert. denied, Nos. 96–954 and 96–1230 (65 U.S.L.W. 3751 and 3754, May 12, 1997) (Public Service).

[4] 82 FERC ¶61,059 (1998).

in accordance with the Commission's Rules.

David P. Boergers,

Acting Secretary.

[FR Doc. 98–7771 Filed 3–24–98; 8:45 am]

BILLING CODE 6717–01–M

DEPARTMENT OF ENERGY

Federal Energy Regulatory Commission

[Docket No. SA98–44–000]

Molz Oil Company; Notice of Petition for Adjustment and Request for Extension of Time

March 19, 1998.

Take notice that on March 9, 1998, Molz Oil Company (Molz) filed a petition, pursuant to section 502(c) of the Natural Gas Policy Act of 1978 (NGPA), for an adjustment of the Commission's refund procedures [15 U.S.C. 3142(c)(1982)] with respect to Molz's Kansas ad valorem tax refund liability. Molz's petition is on file with the Commission and open to public inspection.

The Commission's September 10, 1997, order on remand from the D.C. Circuit Court of Appeals,[1] in Docket No. RP97–369–000, *et al.*,[2] directed first sellers to make Kansas ad valorem tax refunds, with interest, for the period from 1983 to 1988. The Commission clarified the refund procedures in its Order Clarifying Procedures [82 FERC ¶ 61,059 (1988)], stating therein that producers [first sellers] could request additional time to establish the uncollectability of royalty refunds, and that first sellers may file requests for NGPA section 502(c) adjustment relief from the refund requirement and the timing and procedures for implementing the refunds, based on their individual circumstances.

Molz requests, on behalf of first sellers for whom it operated (First Sellers), that the Commission: (1) Extend the time by 90 days from March 9, 1998, in which to obtain the necessary documents and information to determine if the amount of refund set forth in the Statement of Refunds Due [SRD] received from Panhandle Eastern Pipe Line Company [Docket No. RP98–40–000] is correct and to reach an agreement on the amount before submitting the dispute to the Commission; and (2) grant an adjustment to its procedures to allow First Sellers to place into an escrow account the disputed amount of the refund, and, after the resolution of the dispute, retain in the account (i) principal and interest on amounts attributable to production prior to October 4, 1983, and (ii) interest on all reimbursed principal amounts determined to be refundable as being in excess of maximum lawful prices (excluding interest retained under (i) above). Molz also requests a determination that it is liable solely for its proportionate share of the tax refunds.

Any person desiring to be heard or to make any protest with reference to said petition should on or before 15 days after the date of publication in the F**ederal Register** of this notice, file with the Federal Energy Regulatory Commission, 888 First Street, N.W., Washington, D.C. 20426, a motion to intervene or a protest in accordance with the requirements of the Commission's Rules of Practice and Procedure (18 CFR 385.214, 385.211, 385.1105, and 385.1106). All protests filed with the Commission will be considered by it in determining the appropriate action to be taken but will not serve to make the protestants parties to the proceeding. Any person wishing to become a party to a proceeding or to participate as a party in any hearing therein must file a motion to intervene in accordance with the Commission's Rules.

David P. Boergers,

Acting Secretary.

[FR Doc. 98–7785 Filed 3–24–98; 8:45 am]

BILLING CODE 6717–01–M

[1] *Public Service Company of Colorado* v. *FERC,* 91 F.3d 1478 (D.C. Cir. 1996), *cert. denied,* 65 U.S.L.W. 3751 and 3754 (May 12, 1997) (Nos. 96-954 and 96-1230).

[2] See 80 FERC ¶ 61,264 (1997); *order denying reh'g,* 82 FERC ¶ 61,058 (1998).

DEPARTMENT OF ENERGY

Federal Energy Regulatory Commission

[Docket No. SA98–45–000]

Molz Oil Company; Notice of Petition for Adjustment and Request for Extension of Time

March 19, 1998.

Take notice that on March 9, 1998, Molz Oil Company (Molz) and the working interest owners (First Sellers) for whom it operated,[1] filed a petition for adjustment and a request for extension of time under section 502(c) of the Natural Gas Policy Act of 1978 (NGPA), requesting an adjustment to its obligation to make Kansas ad valorem tax reforms to Williams Natural Gas Company (WNG), all as more fully set forth in the petition which is on file with the Commission and open to public inspection.

It is stated that Molz's petition is filed in response to the Commission's September 10, 1997, order in Docket Nos. RP97–369–000, GP97–3–000, GP97–5–000[2] on remand from the D.C. Circuit Court of Appeals,[3] which directed first sellers under the NGPA to make Kansas ad valorum tax refunds, with interest, for the period from 1983 to 1988.

Molz requests that the Commission grant an adjustment to its procedures to allow First Sellers to place into an escrow account the disputed amount of the refund set forth in the Statement of Refunds Due (SRD) from WNG,[4] and, after resolution of the dispute, to retain in the account (a) principal and interest on amounts attributable to production prior to October 4, 1983, and (b) interest on all reimbursed principal amount determined to be refundable as being in excess of maximum lawful prices (excluding interest retained under (a) above. It is stated that the SRD received from WNG was $93,447.06, including interest accrued through December 31, 1997.

Molz also requests an extension of time to permit an additional 90 days beginning March 9, 1998, in which to obtain the necessary documents and information to verify the correct amount of its actual refund liability and to reach an agreement on the amount before submitting the dispute to the Commission.

Any person desiring to be heard or to make any protest with reference to said petition should on or before 15 days after the date of publication in the **Federal Register** of this notice, file with the Federal Energy Regulatory Commission, 888 First Street, N.E., Washington, D.C. 20426, a motion to intervene or a protest in accordance with the requirements of the Commission's Rules of Practice and Procedure (18 CFR 385.214, 385.211, 385.1105, and 385.1106). All protests filed with the Commission will be considered by it in determining the appropriate action to be taken but will not serve to make the protestants parties

[1] First Sellers are Donald Albers, Darry Brown, Rick Caruthers, Judy Courson, Donald E. Evans, Helen Evans, K.B. Evans, Martha Evans, Beverly Molz, Jim Molz, Ben Rathgeber, Bob and Lometa Rathgeber, Lamoine Shrock, R.K. Sweetman and Westmore Drilling Co.

[2] See 80 FERC ¶ 61,264 (1997); order denying reh'g issued January 28, 1998, 82 FERC ¶ 61,058 (1998).

[3] *Public Service Company of Colorado* v. *FERC,* 91 F.3d 1478 (D.C. Cir. 1996), *cert., denied,* 65 U.S.L.W. 3751 and 3754 (May 12, 1997) (Nos. 96–954 and 96–1230).

[4] See. Docket No. RP98–52–000.

to the proceeding. Any person wishing to become a party to a proceeding or to participate as a party in any hearing therein must file a motion to intervene in accordance with the Commission's Rules.

David P. Boergers,

Acting Secretary.

[FR Doc. 98–7786 Filed 3–24–98; 8:45 am]

BILLING CODE 6717–01–M

DEPARTMENT OF ENERGY

Federal Energy Regulatory Commission

[Docket No. CP98–278–000]

Natural Gas Pipeline Company; Notice of Application

March 19, 1998.

Take notice that on March 11, 1998, Natural Gas Pipeline Company (Natural), 701 East 22nd Street, Lombard, Illinois 60148, filed in Docket No. CP98–278–000, an application pursuant to Section 7(b) of the Natural Gas Act for permission and approval to abandon by sale to MidCon Texas Pipeline Operator, Inc. (MidCon Texas), Natural's Clayton Lateral which consists of approximately 21.7 miles of 16-inch pipeline lateral, meters ranging in sizes of 2 through 10 inches and side taps ranging in sizes of 2 through 6 inches, in Duval and Oak Counties, Texas, for $336,913, as more fully set forth in the application on file with the Commission and open to public inspection.

Natural states the facilities are no longer needed to receive gas for system supply and therefore has decided to sell the facilities to MidCon Texas for net book value.

Any person desiring to be heard or to make any protest with reference to said application should on or before April 9, 1998, file with the Federal Energy Regulatory Commission, 888 First Street, N.E., Washington, D.C. 20426, a motion to intervene or a protest in accordance with the requirements of the Commission's Rules of Practice and Procedure (18 CFR 385.214 or 385.211) and the Regulations under the Natural Gas Act (18 CFR 157.10). All protests filed with the Commission will be considered by it in determining the appropriate action to be taken but will not serve to make the protestants parties to the proceeding. Any person wishing to become a party to a proceeding or to participate as a party in any hearing therein must file a motion to intervene in accordance with the Commission's Rules.

Take further notice that, pursuant to the authority contained in and subject to the jurisdiction conferred upon the Federal Energy Regulatory Commission by Sections 7 and 15 of the Natural Gas Act and the Commission's Rules of Practice and Procedure, a hearing will be held without further notice before the Commission or its designee on this application if no motion to intervene is filed within the time required herein, if the Commission on its own review of the matter finds that permission and approval for the proposed abandonment are required by the public convenience and necessity. If a motion for leave to intervene is timely filed, or if the Commission on its own motion believes that a formal hearing is required, further notice of such hearing will be duly given.

Under the procedure herein provided for, unless otherwise advised, it will be unnecessary for Natural to appear or be represented at the hearing.

David P. Boergers,

Acting Secretary.

[FR Doc. 98–7746 Filed 3–24–98; 8:45 am]

BILLING CODE 6717–01–M

DEPARTMENT OF ENERGY

Federal Energy Regulatory Commission

[Docket Nos. RP93–206–019 and RP96–347–010]

Northern Natural Gas Company; Notice of Compliance Filing

March 19, 1998.

Take notice that on March 17, 1998, Northern Natural Gas Company (Northern), tendered for filing under protest to become part of Northern's FERC Gas Tariff, Fifth Revised Volume No. 1, the following tariff sheets proposed to be effective April 1, 1998:

Fifth Revised Sheet No. 245
Second Revised Sheet No. 246
Second Revised Sheet No. 248

Northern states that the above-listed tariff sheets are filed in compliance with the Commission's Order issued March 2, 1998 in the above-referenced dockets, addressing the Carlton Resolution Settlement.

Northern states that copies of the filing were served upon Northern's customers and interested State Commissions.

Any person desiring to protest this filing should file a protest with the Federal Energy Regulatory Commission, 888 First Street, N.E., Washington, D.C 20426, in accordance with Section 385.211 of the Commission's Rules and Regulations. All such protests must be filed as provided in Section 154.210 of the Commission's Regulations. Protests will be considered by the Commission in determining the appropriate action to be taken, but will not serve to make protestants parties to the proceedings. Copies of this filing are on file with the Commission and are available for public inspection in the Public Reference Room.

David P. Boergers,

Acting Secretary.

[FR Doc. 98–7751 Filed 3–24–98; 8:45 am]

BILLING CODE 6717–01–M

DEPARTMENT OF ENERGY

Federal Energy Regulatory Commission

[Docket No. SA98–37–000]

Pickrell Drilling Company, Inc., Notice of Petition for Adjustment and Dispute Resolution Request

March 19, 1998.

Take notice that on March 9, 1998, Pickrell Drilling Company, Inc. (Pickrell), filed a petition for an adjustment under Section 502(c) of the Natural Gas Policy Act of 1978 (NGPA 15 U.S.C. 3412(c)) and Rules 1101–1117 of the Commission's Rules of Practice and Procedure (18 CFR 385.1101–385.1117), wherein Pickrell has requested, on behalf of first sellers (First Sellers) [1] for whom it operated, that the Commission: (1) Resolve the pending dispute between First Sellers and ANR Pipeline Company as to the proper amount of the refund liability of First Sellers for the Kansas ad valorem tax reimbursements set forth in the Statement of Refunds Due (SRD) [2] addressed to Pickrell; (2) waive any refund obligation attributable to the royalty interest of Richard M. Linehan, deceased; and (3) grant an adjustment to its procedures to allow First Sellers to place into an escrow account not only the disputed amount of the refund, but also (i) principal and interest on amounts attributable to production prior to October 4, 1983, and (ii) interest on all principal amounts claimed to be due under the SRD (excluding interest included in the disputed amount or (i) above). Pickrell also requested that it be determined that it was not a working interest owner or First Seller of any of the production with respect to which the tax reimbursements were made and

[1] First Sellers are C.W. Sebits, Barbara Oil Company, Vera J. Casado, Dane G. Hansen Trust, National Cooperative Refinery Association, and David H. Tripp.

[2] See Docket No. RP98–42–000.

that it therefore has no liability under the SRD.

Any person desiring to be heard or to make any protest with reference to said petition should on or before 15 days after the date of publication in the **Federal Register** of this notice, file with the Federal Energy Regulatory Commission, 888 First Street, NE., Washington, DC 20426, a motion to intervene or a protest in accordance with the requirements of the Commission's Rules of Practice and Procedure (18 CFR 385.214, 385.211, 385.1105, and 385.1106). All protests filed with the Commission will be considered by it in determining the appropriate action to be taken but will not serve to make the protestants parties to the proceeding. Any person wishing to become a party to a proceeding or to participate as a party in any hearing therein must file a motion to intervene in accordance with the Commission's Rules.

David P. Boergers,

Acting Secretary.

[FR Doc. 98–7780 Filed 3–24–98; 8:45 am]

BILLING CODE 6717–01–M

DEPARTMENT OF ENERGY

Federal Energy Regulatory Commission

[Docket No. SA98–39–000]

Quinque Oil & Gas Producing Company; Notice of Petition for Adjustment

March 19, 1998.

Take notice that on March 9, 1998, Quinque Oil & Gas Producing Company (Quinque), filed a petition for adjustment under section 502(c) of the Natural Gas Policy Act of 1978 (NGPA),[1] requesting on behalf of certain working interest owners (First Sellers)[2] for whom it operated that the Commission:

(1) Grant an extension of 90 days to allow First Sellers and Panhandle Eastern Pipeline Company (PEPL) to resolve any dispute as to the proper amount of the refund liability of First Sellers from the Kansas ad valorem tax reimbursements set forth in the Statement of Refunds Due (SRD) and to make refunds or to submit such dispute to the Commission for resolution if the parties cannot resolve it within such time, and

(2) In order to stop the accrual of interest pending resolution of disputes and legal issues, grant an adjustment to its procedures to allow First Sellers to place into escrow account only any disputed amount of the refund but also: (1) Principle and interest on amounts of tax reimbursements received in years after the subject well was deregulated, and (ii) principal and interest on amounts attributable to production prior to October 4, 1983.

First Sellers also request an order for reimbursement of the 1984 tax refund First Sellers have made to PEPL to the extent of any part of its is hereafter deemed to be attributable to production prior to October 4, 1983. Quinque also requests that it be determined that it has no liability under the SRD except as to amounts attributable solely to its own working interest. Quinque's petition is on file with the Commission and open to public inspection.

The Commission's September 10 order on remand from the D. C. Circuit Court of Appeals[3] directed first sellers under the NGPA to make Kansas ad valorem tax refunds, with interest, for the period from 1983 to 1988. The Commission's September 10 order also provided that first sellers would, with the Commission's prior approval, amortize their Kansas ad valorem tax refunds over a 5-year period, although interest would continue to accrue on any outstanding balance.

Any person desiring to be heard or to make any protest with reference to said petition should on or before 15 days after the date of publication in the **Federal Register** of this notice, file with the Federal Energy Regulatory Commission, 888 First Street, N.E., Washington, D.C. 20426, a motion to intervene or a protest in accordance with the requirements of the Commission's Rules of Practice and Procedure (18 CFR 385.214, 385.211, 385.1105, and 385.1106). All protests filed with the Commission will be considered by it in determining the appropriate action to be taken but will not serve to make the protestants parties to the proceeding. Any person wishing to become a party to a proceeding or to participate as a party in any hearing therein must file a motion to intervene in accordance with the Commission's Rules.

David P. Boergers,

Acting Secretary.

[FR Doc. 98–7781 Filed 3–24–98; 8:45 am]

BILLING CODE 6717–01–M

[1] 15 U.S.C. 3142(c) (1982).

[2] First Sellers are Quinque Oil & Gas Producing Co., John W. Moore, Margaret C. Moore, Michael Moore, David O. Wilson, Jack E. Engel Estate, Robert Hatcher Estate, Clarence and Margaret Hoeme, C. Dale Stromquist, J & J Enterprises, Lyle Pringle Estate, and Winifred Pringle.

[3] *Public Service Company of Colorado* v. *FERC,* 91 F.3d 1478 (D.C. 1996), cert. denied, Nos. 96–954 and 96–1230 (65 U.S.L.W. 3751 and 3754, May 12, 1997) (Public Service).

DEPARTMENT OF ENERGY

Federal Energy Regulatory Commission

[Docket No. SA98–46–000]

Quinque Operating Company; Notice of Petition for Adjustment

March 19, 1998.

Take notice that on March 9, 1998, Quinque Operating Company (Quinque) and certain working interest owners (First Sellers)[1] for whom it operated, filed a petition, pursuant to section 502(c) of the Natural Gas Policy Act of 1978 (NGPA), for an adjustment of the Commission's refund procedures [15 U.S.C. 3142(c) (1982)] with respect to Quinque's Kansas ad valorem tax refund liability. Quinque's petition is on file with the Commission and open to public inspection.

The Commission's September 10 order on remand from the D.C. Circuit Court of Appeals,[2] in Docket No. RP97–369–000, *et al.*,[3] directed first sellers to make Kansas ad valorem tax refunds, with interest, for the period from 1983 to 1988. The Commission clarified the refund procedures in its Order Clarifying Procedures [82 FERC ¶ 61,059 (1998)], stating therein that producers (first sellers) could request additional time to establish the uncollectability of royalty refunds, and that first sellers may file requests for NGPA section 502(c) adjustment relief from the refund requirement and the timing and procedures for implementing the refunds, based on their individual circumstances.

Quinque requests that the Commission: (1) Grant a 90 day extension to allow First Sellers and Colorado Interstate Gas Company (CIG) to resolve any dispute as to the proper amount of the refund liability of First Sellers for the Kansas ad valorem tax reimbursements set forth in the Statement of Refunds Due (SRD), filed in Docket No. RP98–54–000, and to make refunds or to submit such dispute to FERC for resolution if the parties cannot resolve it within such time, and

[1] First Sellers are Quinque Oil & Gas Producing Co.; Jane Moore; Margaret C. Moore; Penny Moore; David O. Wilson; Pete Balog; Robert Hatcher Estate; Clarence and Margaret Hoeme; George Thomas Estate; LewJac Company (LewJac Company's interest now owned by Estate of Jack Engle); Lyle Pringle Estate; Winifred Pringle; F.L. Shogrin; C. Dale Stromquist; Benjamin and Margaret Zane; and Jack and Edna Walker.

[2] *Public Service Company of Colorado* v. *FERC,* 91 F.3d 1478 (D.C. Cir. 1996), *cert. denied,* 65 U.S.L.W. 3751 and 3754 (May 12, 1997) (Nos. 96–954 and 96–1230).

[3] See 80 FERC ¶ 61,264 (1997); *order denying reh'g,* issued January 28, 1998, 82 FERC ¶ 61,058 (1998).

(2) in order to stop the accrual of interest pending resolution of disputes and legal issues, grant an adjustment to its procedures to allow First Sellers to place into escrow account not only any disputed amount of the refund but also (a) principal and interest on amounts of tax reimbursements received in years after the subject well was deregulated, and (b) principal and interest on amounts attributable to production prior to October 4, 1983.

First Sellers also request an order for reimbursement of the 1984 tax refund First Sellers have made to CIG to the extent any part of it is hereafter deemed to be attributable to production prior to October 4, 1983. Quinque also requests that it be determined that it was not a working interest owner or First Seller of any of the production with respect to which the tax reimbursements were made and that it therefore has no liability under the SRD.

Any person desiring to be heard or to make any protest with reference to said petition should on or before 15 days after the date of publication in the **Federal Register** of this notice, file with the Federal Energy Regulatory Commission, 888 First Street, N.E., Washington, D.C. 20426, a motion to intervene or a protest in accordance with the requirements of the Commission's Rules of Practice and Procedure (18 CFR 385.214, 385.211, 385.1105, and 385.1106). All protests filed with the Commission will be considered by it in determining the appropriate action to be taken but will not serve to make the protestants parties to the proceeding. Any person wishing to become a party to a proceeding or to participate as a party in any hearing therein must file a motion to intervene in accordance with the Commission's Rules.

David P. Boergers,

Acting Secretary.

[FR Doc. 98–7787 Filed 3–24–98; 8:45 am]

BILLING CODE 6717–01–M

DEPARTMENT OF ENERGY

Federal Energy Regulatory Commission

[Docket No. SA98–47–000]

Quinque Operating Company; Notice of Petition for Adjustment

March 19, 1998.

Take notice that on March 9, 1998, Quinque Operating Company (Quinque) and certain working interest owners for whom it operated,[1] filed a petition, pursuant to Section 502(c) of the Natural Gas Policy Act of 1978 (NGPA), for an adjustment of the Commission's refund procedures [15 U.S.C. 3142(c) (1982)] with respect to Quinque's Kansas ad valorem tax refund liability.

The Commission's September 10, 1997 order on remand from the D.C. Circuit Court of Appeals,[2] in Docket No. RP97–369–000 *et al*,[3] directed first sellers to make Kansas ad valorem tax refunds, with interest, for the period from 1983 to 1988. The Commission clarified the refund procedures in its *Order Clarifying Procedures* [82 FERC ¶ 61,059 (1998)], stating therein that producers [first sellers] could request additional time to establish the uncollectability of royalty refunds, and that first sellers may file requests for NGPA Section 502(c) adjustment relief from the refund requirement and the timing and procedures for implementing the refunds, based on their individual circumstances.

Quinque requests that the Commission:

(1) Grant an extension of 90 days to allow First Sellers and Panhandle Eastern Pipe Line Company (PEPL) to resolve any dispute as to the proper amount of the refund liability of First Sellers for the Kansas ad valorem tax reimbursements set forth in the Statement of Refunds Due (SRD) addressed to Quinque, or to submit such dispute to FERC for resolution if the parties cannot resolve it within such time, and

(2) In order to stop the accrual of interest pending resolution of disputes and legal issues, grant an adjustment to its procedures to allow First Sellers to place into an escrow account not only any disputed amount of the refund by PEPL but also

(i) principal and interest on amounts of tax reimbursements received in years after the subject wells were deregulated, and

(ii) interest on all principal amounts refunded to PEPL.

Quinque also requests that it be determined that it has no liability under the SRD except as to amounts attributable solely to its own working interest.

Any person desiring to be heard or to make any protest with reference to said petition should on or before 15 days after the date of publication in the **Federal Register** of this notice, file with the Federal Energy Regulatory Commission, 888 First Street, N.E., Washington, D.C. 20426, a motion to intervene or a protest in accordance with the requirements of the Commission's Rules of Practice and Procedure (18 CFR 385.214, 385.211, 385.1105, and 385.1106). All protests filed with the Commission will be considered by it in determining the appropriate action to be taken but will not serve to make the protestants parties to the proceeding. Any person wishing to become a party to a proceeding or to participate as a party in any hearing therein must file a motion to intervene in accordance with the Commission's Rules.

David P. Boergers,

Acting Secretary.

[FR Doc. 98–7788 Filed 3–24–98; 8:45 am]

BILLING CODE 6717–01–M

[1] First Sellers are Quinque Oil & Gas Production Co., Quinque Operating Company, John W. Moore, John W. Moore Trust, Margaret C. Moore, Michael Moore, David O. Wilson, Jack E. Engel Estate, J&J EAnterprises, Lyle Pringle Estate, Winifred Pringle, C. Dale Stromquist, Clarence and Margaret Hoeme, Robert L. And Audrey Rice, George Rosel Estate, Robert Hatcher Estate, and Benjamin and Margaret Zane.

[2] *Public Service Company of Colorado* v. *FERC,* 91 F.3d 1478 (D.C. 1996), cert. denied, Nos. 96–954 and 96–1230 (65 U.S.L.W. 3751 and 3754, May 12, 1997).

[3] See 80 FERC ¶ 61,264 (1997); order denying reh'g issued January 28, 1998, 82 FERC ¶ 61,058 (1998).

DEPARTMENT OF ENERGY

Federal Energy Regulatory Commission

[Docket No. SA98–23–000]

Raymond Oil Company, Inc.; Notice of Petition for Adjustment

March 19, 1998.

Take notice that on March 9, 1998, Raymond Oil Company, Inc. (Raymond) filed a petition for adjustment under section 502(c) of the Natural Gas Policy Act of 1978 (NGPA),[1] requesting to be relieved of its obligation to make Kansas ad valorem tax refunds to The Williams Companies, Inc. (Williams), as required by the Commission's September 10, 1997 order in Docket Nos. GP97–3–000, GP97–4–000, GP97–5–000, and RP97–369–000.[2] Raymond's petition is on file with the Commission and open to public inspection.

The Commission's September 10 order on remand from the D.C. Circuit Court of appeals[3] directed first sellers under the NGPA to make Kansas ad valorem tax refunds, with interest, for

[1] 15 U.S.C. 3142(c) (1982).

[2] See 80 FERC ¶ 61,264 (1997); order denying reh'g issued January 28, 1998, 82 FERC ¶ 61,058 (1998).

[3] *Public Service Company of Colorado* v. *FERC,* 91 F.3d 1478 (D.C. 1996), cert. denied, Nos. 96–954 and 96–1230 (65 U.S.L.W. 3751 and 3754, May 12, 1997) (Public Service).

the period from 1983 to 1988. The Commission's September 10 order also provided that first sellers could, with the Commission's prior approval, amortize their Kansas ad valorem tax refunds over a 5-year period, although interest would continue to accrue on any outstanding balance.

Raymond states that Williams in its November 10, 1997 statement has sought to collect a refund obligation of $376,134.78, including interest through December 31, 1997 for the Carr Lease, the Carr ''A'' Lease, the Mills ''A'' Lease, the Mills ''R'' Lease, and the Cline ''A'' Lease. Raymond was the operator of the subject leases and no portion of the ad valoram tax attributable to the royalty interest in these leases was ever collected by Raymond and the same is not pertinent to this proceeding. The working interest owners in varying interests in the varying leases are John Alexander, R.L. Rooke, Francis Raymond, Western Ventures, Inc., Patrick Raymond, William M. Raymond, Shirley Stark and Raymond Oil Company, Inc. Raymond has remitted under protest, with all rights reserved, $203,935.24 to Williams on behalf of Patrick Raymond, William M. Raymond, Shirley Stark and Raymond Oil Company, Inc.

Raymond States that John Alexander, R.L. Rooke and Francis Raymond are deceased and that the alleged refunds should be deemed uncollectible. Their respective estates are now closed and the Kansas non-claims statute (K.S.A. 59–2239) has since run out thus leaving no legal way for Raymond, as operator, from taking legal action for recovering any of the monies. Raymond was never the owner of the gas attributable to these deceased working interest owners and as a contract operator of the subject oil and gas leases, Raymond did not purchase this gas from them and does not have an ongoing contractual relationship permitting it to collect the subject refunds through the use of billing adjustments. Raymond reports the monies to be $11,284.04 from John Alexander, $37, 613.48 from R.L. Rooke and $48,075.07 from Francis Raymond.

Raymond states that the alleged refunds due from Western Ventures, Inc. (Western) should be determined as uncollectible. Western was liquidated on December 4, 1986 and the Kansas statutes relating to the liabilities of a dissolved corporation provide that successors in interest now have no obligation for making reimbursement for monies received by the corporation. Raymond requests that the Commission recognize that the applicable three year Kansas statute of limitation and the laws of the State of Kansas prohibit Raymond, as operator, from taking legal action against Western and its stockholders in an attempt to obtain a refund of the tax and interest. Raymond reports that Western owes a refund of $75,226.96.

Raymond requests that the Commission grant Raymond staff adjustment in the amount of $172,199.55 for taxes and interest as of December 31, 1997, in connection with the Statement of Refunds Due submitted to it on November 10, 1997, by Williams.

Any person desiring to be heard or to make any protest with reference to said petition should on or before 15 days after the date of publication in the **Federal Register** of this notice, file with the Federal Energy Regulatory Commission, 888 First Street N.E., Washington, D.C. 20426, a motion to intervene or a protest in accordance with the requirements of the Commission's Rules of Practice and Procedure (18 CFR 385.214, 385.211, 385.1105, and 385.1106). All protests filed with the Commission will be considered by it in determining the appropriate action to be taken but will not serve to make the protestants parties to the proceeding. Any person wishing to become a party to a proceeding or to participate as a party in any hearing must file a motion to intervene in accordance with the Commission's Rules

David P. Boergers,

Acting Secretary.

[FR Doc. 98–7775 Filed 3–24–98; 8:45 am]

BILLING CODE 6717–01–M

DEPARTMENT OF ENERGY

Federal Energy Regulatory Commission

[Docket No. SA98–20–000]

Dale Schwarzhoff; Notice of Petition for Adjustment

March 19, 1998.

Take notice that on March 9, 1998, Dale Schwarzhoff (First Seller) filed a petition for adjustment under section 502(c) of the Natural Gas Policy Act of 1978 (NGPA),[1] requesting that the refund procedures in the Commission's September 10, 1997 order in Docket Nos. RP97–369–000, GP97–3–000, GP97–4–000, and GP97–5–000,[2] be altered with respect to Schwarzhoff's Kansas ad valorem tax refund liability.

The Commission's September 10 order on remand from the D.C. Circuit Court of Appeals[3] directed first sellers under the NGPA to make Kansas ad valorem tax refunds, with interest, for the period from 1983 to 1988. The Commission issued a January 28, 1998 order in Docket No. RP98–39–001, *et al.* (January 28 Order),[4] clarifying the refund procedures, stating that producers could request additional time to establish the uncollectability of royalty refunds, and that first seller may file requests for NGPA section 502(c) adjustment relief from the refund requirement and the timing and procedures for implementing the refunds, based on the individual circumstances applicable to each first seller.

First Seller requests, pursuant to the Commission's January 28 Order, that the Commission grant First Seller and Northern Natural Gas Pipeline Company (Pipeline), an extension of 90 days to allow First Seller and Pipeline to resolve any dispute as to the proper amount of the refund liability of First Seller for the Kansas ad valorem tax reimbursements set forth in the Statement of Refunds Due (SRD) addressed to Benson Mineral Group, Inc. (BMG), the Operator, or to submit such dispute to FERC for resolution if the parties cannot resolve the dispute within such time. In addition, First Seller also request that in order to stop the accrual of interest pending resolution of disputes and legal issues, that an adjustment be granted to the FERC's procedures to allow First Seller to place into an escrow account not only any disputed amount of the refund amount calculated by Pipeline, but also principal and interest on amounts attributable to production prior to October 4, 1983, and interest on all other amounts claimed to be due under the SRD.

First Seller argues that it seeks to establish these procedures to ensure that it pays only that which is legitimately owed, and that it will be able to recover the overpayment, if it is subsequently determined that First Seller's refund liability was less than that originally claimed by BMG.

Any person desiring to be heard or to make any protest with reference to said petition should on or before 15 days after the date of publication in the

[1] 15 U.S.C. 3142(c) (1982).

[2] See 80 FERC ¶ 61,264 (1997); order denying reh'g issued January 28, 1998, 82 FERC ¶ 61,058 (1998).

[3] *Public Service Company of Colorado* v. *FERC*, 91 F.3d 1478 (D.C. 1996), cert. denied, Nos. 96–954 and 96–1230 (65 U.S.L.W. 3751 and 3754, May 12, 1997).

[4] 82 FERC ¶ 61,059 (1998).

Federal Register of this notice, file with the Federal Energy Regulatory Commission, 888 First Street, N.E., Washington, D.C. 20426, a motion to intervene or a protest in accordance with the requirements of the Commission's Rules of Practice and Procedure (18 CFR 385.214, 385.211, 385.1105, and 385.1106). All protests filed with the Commission will be considered by it in determining the appropriate action to be taken but will not serve to make the protestants parties to the proceeding. Any person wishing to become a party to a proceeding or to participate as a party in any hearing therein must file a motion to intervene in accordance with the Commission's Rule.

David P. Boergers,

Acting Secretary.

[FR Doc. 98–7772 Filed 3–24–98; 8:45 am]

BILLING CODE 6717–01–M

DEPARTMENT OF ENERGY

Federal Energy Regulatory Commission

[Docket No. RP96–345–003]

Tennessee Gas Pipeline Company; Notice of Compliance Filing

March 19, 1998.

Take notice that on March 16, 1998, Tennessee Gas Pipeline Company (Tennessee), tendered for filing as part of its FERC Gas Tariff, Fifth Revised Volume No. 1, Fifth Revised Sheet No. 319A, with an effective date of April 15, 1998.

Tennessee states that Fifth Revised Sheet No. 319A is being filed in compliance with the Commission's March 3, 1998 Order on Rehearing and Clarification in the above-referenced docket (March 3 Order). Tennessee Gas Pipeline Company, 82 FERC ¶ 61,221 (1998).

Tennessee states that the revised tariff sheet provides that unscheduled flow penalties do not apply for the remainder of the gas day to an interruptible shipper's gas flow that has been nominated and scheduled at a point but is subsequently involuntarily bumped down to zero at that point.

Any person desiring to protest this filing should file a protest with the Federal Energy Regulatory Commission, 888 First Street, N.E., Washington, D.C. 20426, in accordance with Section 385.211 of the Commission's Rules and Regulations. All such protests must be filed as provided in Section 154.210 of the Commission's Regulations. Protests will be considered by the Commission in determining the appropriate action to be taken, but will not serve to make protestants parties to the proceedings. Copies of this filing are on file with the Commission and are available for public inspection in the Public Reference Room.

David P. Boergers,

Acting Secretary.

[FR Doc. 98–7754 Filed 3–24–98; 8:45 am]

BILLING CODE 6717–01–M

DEPARTMENT OF ENERGY

Federal Energy Regulatory Commission

[Docket No. CP98–277–000]

Transok, L.L.C. Notice of Petition for Declaratory Order

March 19, 1998.

Take notice that, on March 10, 1998, Transok, L.L.C. (Transok), 110 W. 7th, Tulsa, OK 74101–3008, filed a petition pursuant to Rule 207 of the Commission's Rules of Practice and Procedure (18 CFR 385.207). Transok requests a declaratory order stating that its acquisition of 37 miles of pipeline, located in Custer and Roger Mills Counties, Oklahoma and currently owned by, Northern Natural Gas Company (Northern) will not subject Transok to the jurisdiction of the Commission. All of this is more fully set forth in the application, which is on file with the Commission and open to public inspection.

This petition is a companion to Northern's application to abandon facilities in Docket No. CP98–218–000. Transok is a limited liability corporation engaged in gathering and intrastate transportation of gas.

Transok and Northern have entered into a sales agreement under which Northern will transfer facilities to Transok for $3,000,000. Transok states that after the transfer, it will use the facilities as part of its gathering system.

The facilities to be sold by Northern consist of:

1. The Redmoon Lateral made up of 14 miles of 8-inch line extending from the outlet of the inactive Crescendo Resources, L.L.P. Plant in Section 5, Township 15N, Range 21W, Roger Mills County, Oklahoma to the Redmoon Dehy Yard located in Section 27, Township 14N, Range 20W, in Custer County, Oklahoma.

2. The Custer County Pipeline made up of 23 miles of 16-inch line extending from the Northern/Transok interconnect in Section 22, Township 13N, Range 17W, to a point in Section 14, Township 12N, Range 14W, all in Custer County, Oklahoma.

Any person desiring to be heard or make any protest with reference to said application should on or before April 9, 1998, file with the Federal Energy Regulatory Commission, 888 First Street, N.E., Washington D.C. 20426, a motion to intervene or a protest in accordance with the requirements of the Commission's Rules of Practice and Procedure (18 CFR 385.214 or 385.211) and the regulations under the Natural Gas Act (18 CFR 157.10). All protests filed with the Commission will be considered by it in determining the appropriate action to be taken but will not serve to make the protestants parties to the proceeding. Any person wishing to become a party to a proceeding or to participate as a party in any hearing therein must file a motion to intervene in accordance with the Commission's Rules.

Take further notice that, pursuant to the authority contained in and subject to the jurisdiction conferred upon the Federal Energy Regulatory Commission by Sections 7 and 15 of the Natural Gas Act and the Commission's Rules of Practice and Procedure, a hearing will be held without further notice before the Commission or its designee on this application if no motion to intervene is filed within the time required, or if the Commission on its own review of the matter finds that a grant of the certificate is required by the public convenience and necessity. If a motion for leave to intervene is timely filed, or if the Commission on its own motion believes that a formal hearing is required, further notice of such hearing will be duly given.

Under the procedure herein provided for, unless otherwise advised, it will be unnecessary for Transok to appear or be represented at the hearing.

David P. Boergers,

Acting Secretary.

[FR Doc. 98–7745 Filed 3–24–98; 8:45 am]

BILLING CODE 6717–01–M

DEPARTMENT OF ENERGY

Federal Energy Regulatory Commission

[Project No. 1930–014 California]

Southern California Edison Company; Notice of Availability of Final Environmental Assessment

March 19, 1998.

In accordance with the National Environmental Policy Act of 1969 and the Federal Energy Regulatory Commission's (Commission) regulations, 18 CFR Part 380 (Order No. 486, 52 F.R. 47897), the Office of

Hydropower Licensing has reviewed the application for a new license for the existing Kern River No. 1 Project. The project is located near Bakersfield, in Kern County, California.

On July 31, 1997, the Commission staff issued and distributed to all parties a draft environmental assessment on the project, and requested that comments be filed with the Commission within 30 days. At the request of the Fish and Wildlife Service the comment period was extended an additional 30 days to September 30, 1997. Comments were filed and are addressed in the final environmental assessment (FEA).

The FEA contains the staff's analysis of the potential environmental impacts of the project and has concluded that licensing the project, with appropriate environmental protective measures, would not constitute a major federal action that would significantly affect the quality of the human environment.

Copies of the FEA are available for review in the Public Reference Room, Room 2A, of the Commission's offices at 888 First Street, N.E., Washington, D.C. 20426.

David P. Boergers,

Acting Secretary.

[FR Doc. 98–7748 Filed 3–24–98; 8:45 am]

BILLING CODE 6717–01–M

DEPARTMENT OF ENERGY

Federal Energy Regulatory Commission

Notice Tendered For Filing With The Commission

March 19, 1998.

Take notice that the following hydroelectric application has been filed with the Commission and is available for public inspection:

a. *Type of Application:* Major New License (Tendered Notice).

b. *Project No.:* 2620–005.

c. *Date filed:* March 9, 1998.

d. *Applicant:* Lockhart Power Company.

e. *Name of Project:* Lockhart Project.

f. *Location:* On the Broad River in Union, Chester, York, and Cherokee counties, South Carolina.

g. *Filed Pursuant to:* Federal Power Act 16 USC 791(a)–825(r).

h. *Applicant Contact:* Mr. Leslie Anderson, General Manager, Lockhart Power Company, 420 River Street, Lockhart, South Carolina.

i. *FERC Contact:* Charles R. Hall at (202) 219–2853.

j. *Description of Project:* The existing project consists of: (1) A 16-foot-high, concrete gravity dam; (2) a 7.5-mile-long, 300-care reservoir; (3) a 7,497-foot-long canal; (4) a powerhouse containing five turbine-generator units with a total installed capacity of 15,200 kilowatts (kW), proposed for upgrading to 18,000 kW; and (4) a 1,500-foot-long tailrace.

k. Under Section 4.32 (b)(7) of the Commission's regulations (18 CFR), if any resource agency, Indian Tribe, or person believes that the applicant should conduct an additional scientific study to form an adequate factual basis for a complete analysis of the application on its merits, they must file a request for the study with the Commission, not later than 60 days after the application is filed, and must serve a copy of the request on the applicant.

1. With this notice, we are initiating consultation with the South Carolina State Historic Preservation Officer, as required by section 106, National Historic Preservation Act, and the regulations of the Advisory Council on Historic Preservation, 36 CFR, 800.4.

David P. Boergers,

Acting Secretary.

[FR Doc. 98–7749 Filed 3–24–98; 8:45 am]

BILLING CODE 6717–01–M

ENVIRONMENTAL PROTECTION AGENCY

[OPP–181057; FRL 5780–1]

Bifenthrin; Receipt of Application for Emergency Exemption, Solicitation of Public Comment

AGENCY: Environmental Protection Agency (EPA).

ACTION: Notice.

SUMMARY: EPA has received a specific exemption request from the Washington Department of Agriculture (hereafter referred to as the ''Applicant'') to use the pesticide bifenthrin (CAS 8657–04–3 *cis* and 83322–02–5 *trans*), formulated as Brigade WSB, to treat up to 9,500 acres of raspberries to control weevils. This is the sixth year this use has been requested, and it has been allowed under section 18 for the past 5 years. Since this request proposes a use which has been requested or granted in any 3 previous years, and a complete application for registration and petition for tolerance has not yet been submitted to the Agency. EPA is soliciting public comment before making the decision whether or not to grant the exemption, in accordance with 40 CFR 166.24(a)(6).

DATES: Comments must be received on or before April 9, 1998.

ADDRESSES: Three copies of written comments, bearing the identification notation ''OPP–181057,'' should be submitted by mail to: Public Information and Records Integrity Branch, Information Resources and Services Division (7502C), Office of Pesticide Programs, Environmental Protection Agency, 401 M St., SW., Washington, DC 20460. In person, bring comments to: Rm. 119, Crystal Mall #2, 1921 Jefferson Davis Highway, Arlington, VA.

Comments and data may also be submitted electronically to: opp-docket@epamail.epa.gov. Follow the instruction under ''SUPPLEMENTARY INFORMATION.'' No Confidential Business Information (CBI) should be submitted through e-mail.

Information submitted in any comment concerning this notice may be claimed confidential by marking any part or all of that information as CBI. Information so marked will not be disclosed except in accordance with procedures set forth in 40 CFR part 2. A copy of the comment that does not contain CBI must be submitted for inclusion in the public record. Information not marked confidential may be included in the public record by EPA without prior notice. The public docket is available for public inspection in Rm. 119, Crystal Mall #2, 1921 Jefferson Davis Highway, Arlington, VA, from 8:30 a.m. to 4 p.m., Monday through Friday, excluding legal holidays.

FOR FURTHER INFORMATION CONTACT: By mail: Andrea Beard, Registration Division (7505C), Office of Pesticide Programs, Environmental Protection Agency, 401 M St., SW., Washington, DC 20460. Office location, telephone number, and e-mail: Rm. 267, Crystal Mall #2, 1921 Jefferson Davis Highway, Arlington, VA, (703–308–9356); e-mail: beard.andrea@epamail.epa.gov.

SUPPLEMENTARY INFORMATION: Pursuant to section 18 of the Federal Insecticide, Fungicide, and Rodenticide Act (FIFRA) (7 U.S.C. 136p), the Administrator may, at her discretion, exempt a state agency from any registration provision of FIFRA if she determines that emergency conditions exist which require such exemption. The Applicant has requested the Administrator to issue a specific exemption for the use of bifenthrin on raspberries to control weevils. Information in accordance with 40 CFR part 166 was submitted as part of this request.

According to the Applicant, this emergency exists because of the loss of the chlorinated hydrocarbon insecticides. Initially, raspberry growers obtained some relief through use of carbofuran under an exemption; however, that use was later disallowed

due to groundwater concerns. Exemptions were then issued for several years for use of permethrin, but discontinued as the Applicant opted to request bifenthrin instead, due to claims that use of permethrin disrupted natural controls of other raspberry pests, leading to population flare-ups of these pests (primarily mites). This use of bifenthrin has been allowed under section 18 for the past 5 years, and the Applicant states that alternative controls are not adequate to prevent significant economic losses due to damage and contamination problems from weevils.

Under the proposed exemption, bifenthrin would be applied at a rate of 0.1 lb. active ingredient (a.i.) per acre, with no more than 2 applications during the growing season, not to exceed the rate of 0.2 lb. a.i. per acre using ground equipment only. If all 9,500 acres are treated at this maximum rate, this could potentially result in a total use of 1,900 lb. a.i.

This notice does not constitute a decision by EPA on the application itself. The regulations governing section 18 require publication of a notice of receipt of an application for a specific exemption proposing a use which has been requested or granted in any 3 previous years, and a complete application for registration and/or tolerance petition has not been submitted to the Agency [40 CFR 166.24 (a)(6). Such notice provides for opportunity for public comment on the application.

The official record for this notice, as well as the public version, has been established for this notice under docket number [OPP–181057] (including comments and data submitted electronically as described below). A public version of this record, including printed, paper versions of electronic comments, which does not include any information claimed as CBI is available for inspection from 8:30 a.m. to 4 p.m., Monday through Friday, excluding legal holidays. The official record is the paper record maintained at the address in ''ADDRESSES'' at the beginning of this document.

Electronic comments can be sent directly to EPA at:

opp-docket@epamail.epa.gov

Electronic comments must be submitted as an ASCII file avoiding the use of special characters and any form of encryption. Comments and data will also be accepted on disks in WordPerfect in 5.1/6.1 or ASCII file format. All comments and data in electronic form must be identified by the docket number [OPP–181057]. Electronic comments on this notice may be filed online at many Federal Depository Libraries.

The Agency, accordingly, will review and consider all comments received during the comment period in determining whether to issue the emergency exemption requested by the Washington Department of Agriculture.

List of Subjects

Environmental protection, Pesticides and pests, Emergency exemptions.

Dated: March 13, 1998

Peter Caulkins,

Acting Director, Registration Division, Office of Pesticide Programs.

[FR Doc. 98–7301 Filed 3–24–98; 8:45 am]

BILLING CODE 6560–50–F

ENVIRONMENTAL PROTECTION AGENCY

[OPP–181056; FRL 5779–9]

Carbofuran; Receipt of Application for Emergency Exemption, Solicitation of Public Comment

AGENCY: Environmental Protection Agency (EPA).

ACTION: Notice.

SUMMARY: EPA has received a specific exemption request from the Texas Department of Agriculture and the Louisiana Department of Agriculture and Forestry (hereafter referred to as the ''Applicants'') to use the pesticide flowable carbofuran (Furadan 4F Insecticide/Nematicide) (EPA Reg. No. 279–2876) to treat up to 1.8 million acres of cotton in Texas, and up to 500,000 acres of cotton in Louisiana, to control cotton aphids. The Applicants propose the use of a chemical which has been the subject of a Special Review within EPA's Office of Pesticide Programs. The granular formulation of carbofuran was the subject of a Special Review between the years of 1986–1991, which resulted in a negotiated settlement whereby most of the registered uses of granular carbofuran were phased out. While the flowable formulation of carbofuran is not the subject of a Special Review, EPA believes that the proposed use of flowable carbofuran on cotton could pose a risk similar to the risk assessed by EPA under the Special Review of granular carbofuran. Additionally, in 1997 EPA denied requests made under provisions of section 18 for this use of flowable carbofuran. Therefore, in accordance with 40 CFR 166.24, EPA is soliciting public comment before making the decision whether or not to grant the exemption.

DATES: Comments must be received on or before April 9, 1998.

ADDRESSES: Three copies of written comments, bearing the identification notation ''OPP–181056,'' should be submitted by mail to: Public Information and Records Integrity Branch, Information Resources and Services Division (7502C), Office of Pesticide Programs, Environmental Protection Agency, 401 M St., SW., Washington, DC 20460. In person, bring comments to: Rm. 119, Crystal Mall #2, 1921 Jefferson Davis Highway, Arlington, VA.

Comments and data may also be submitted electronically to: opp-docket@epamail.epa.gov. Follow the instruction under ''SUPPLEMENTARY INFORMATION.'' No Confidential Business Information (CBI) should be submitted through e-mail.

Information submitted in any comment concerning this notice may be claimed confidential by marking any part or all of that information as CBI. Information so marked will not be disclosed except in accordance with procedures set forth in 40 CFR part 2. A copy of the comment that does not contain CBI must be submitted for inclusion in the public record. Information not marked confidential may be included in the public record by EPA without prior notice. The public docket is available for public inspection in Rm. 119, Crystal Mall #2, 1921 Jefferson Davis Highway, Arlington, VA, from 8:30 a.m. to 4 p.m., Monday through Friday, excluding legal holidays.

FOR FURTHER INFORMATION CONTACT: By mail: David Deegan, Registration Division (7505C), Office of Pesticide Programs, Environmental Protection Agency, 401 M St., SW., Washington, DC 20460. Office location, telephone number, and e-mail: Crystal Mall #2, 1921 Jefferson Davis Highway, Arlington, VA, (703–308–9358); e-mail: deegan.dave@epamail.epa.gov.

SUPPLEMENTARY INFORMATION: Pursuant to section 18 of the Federal Insecticide, Fungicide, and Rodenticide Act (FIFRA) (7 U.S.C. 136p), the Administrator may, at her discretion, exempt a state agency from any registration provision of FIFRA if she determines that emergency conditions exist which require such exemption. The Applicants have requested the Administrator to issue a specific exemption for the use of carbofuran on cotton to control aphids. Information in accordance with 40 CFR part 166 was submitted as part of this request.

As part of this request, the Applicants assert that the state of Texas and the state of Louisiana are likely to experience non-routine infestations of aphids during the 1998 cotton growing season. The applicants further claim that, without a specific exemption of FIFRA for the use of flowable carbofuran on cotton to control cotton aphids, cotton growers in the states will suffer significant economic losses. The applicants also detail a use program designed to minimize risks to pesticide handlers and applicators, non-target organisms (both Federally-listed endangered species, and non-listed species), and to reduce the possibility of drift and runoff.

The applicants propose to make no more than two applications of flowable carbofuran on cotton at the rate of 0.25 lb. active ingredient [(a.i.)] (8 fluid oz.) in a minimum of 2 gallons of finished spray per acre by air, or 10 gallons of finished spray per acre by ground application. The total maximum proposed use during the 1998 growing season (March 1, 1998 until September 30, 1998 in Texas, and between June 1, 1998 – September 30, 1998 in Louisiana) would be 0.5 lb. a.i. (16 fluid oz.) per acre. The applicants propose that the maximum acreage which could be treated under the requested exemption would be 1.8 million acres in Texas, and 500,000 acres in Louisiana. If all acres were treated at the maximum proposed rates, then 900,000 lbs. a.i. (225,000 gallons Furadan 4F Insecticide/Nematicide) would be used in Texas; and 250,000 lbs. a.i. would be used in Louisiana.

This notice does not constitute a decision by EPA on the application itself. The regulations governing section 18 require publication of a notice of receipt of an application for a specific exemption proposing use of a chemical (i.e., an active ingredient) which has been the subject of a Special Review within EPA's Office of Pesticide Programs, and the proposed use could pose a risk similar to the risk assessed by EPA under the previous Special Review. Such notice provides for opportunity for public comment on the application.

The official record for this notice, as well as the public version, has been established for this notice under docket number [OPP–181056] (including comments and data submitted electronically as described below). A public version of this record, including printed, paper versions of electronic comments, which does not include any information claimed as CBI is available for inspection from 8:30 a.m. to 4 p.m., Monday through Friday, excluding legal holidays. The official record is the paper record maintained at the address in ''ADDRESSES'' at the beginning of this document.

Electronic comments can be sent directly to EPA at: opp-docket@epamail.epa.gov

Electronic comments must be submitted as an ASCII file avoiding the use of special characters and any form of encryption. Comments and data will also be accepted on disks in WordPerfect in 5.1/6.1 or ASCII file format. All comments and data in electronic form must be identified by the docket number [OPP–181056]. Electronic comments on this notice may be filed online at many Federal Depository Libraries.

The Agency, accordingly, will review and consider all comments received during the comment period in determining whether to issue the emergency exemption requested by the Texas Department of Agriculture, and by the Louisiana Department of Agriculture and Forestry.

List of Subjects

Environmental protection, Pesticides and pests, Emergency exemptions.

Dated: March 13,1998

Peter Caulkins,

Acting Director, Registration Division, Office of Pesticide Programs.

[FR Doc. 98–7303 Filed 3–24–98; 8:45 am]

BILLING CODE 6560–50–F

ENVIRONMENTAL PROTECTION AGENCY

[OPP–181055; FRL 5779–4]

Pyriproxyfen and Buprofezin; Receipt of Application for Emergency Exemptions, Solicitation of Public Comment

AGENCY: Environmental Protection Agency (EPA).

ACTION: Notice.

SUMMARY: EPA has received specific exemption requests from the California Department of Pesticide Regulation (hereafter referred to as the ''Applicant'') to use the insect growth regulators pyriproxyfen (CAS 95737–68–1) and buprofezin (CAS 69327–76–0) to treat up to 45,000 acres of citrus to control California Red Scale. In the case of pyriproxyfen, the Applicant proposes the first food use of an active ingredient. Buprofezin is an unregistered material, and its proposed use is thus use of a ''new'' chemical. Therefore, in accordance with 40 CFR 166.24, EPA is soliciting public comment before making the decision whether or not to grant the exemptions.

DATES: Comments must be received on or before April 9, 1998.

ADDRESSES: Three copies of written comments, bearing the identification notation ''OPP–181055,'' should be submitted by mail to: Public Information and Records Integrity Branch, Information Resources and Services Division (7502C), Office of Pesticide Programs, Environmental Protection Agency, 401 M St., SW., Washington, DC 20460. In person, bring comments to: Rm. 119, Crystal Mall #2, 1921 Jefferson Davis Highway, Arlington, VA.

Comments and data may also be submitted electronically to: opp-docket@epamail.epa.gov. Follow the instruction under ''SUPPLEMENTARY INFORMATION.'' No Confidential Business Information (CBI) should be submitted through e-mail.

Information submitted in any comment concerning this notice may be claimed confidential by marking any part or all of that information as CBI. Information so marked will not be disclosed except in accordance with procedures set forth in 40 CFR part 2. A copy of the comment that does not contain CBI must be submitted for inclusion in the public record. Information not marked confidential may be included in the public record by EPA without prior notice. The public docket is available for public inspection in Rm. 119, Crystal Mall #2, 1921 Jefferson Davis Highway, Arlington, VA, from 8:30 a.m. to 4 p.m., Monday through Friday, excluding legal holidays.

FOR FURTHER INFORMATION CONTACT: By mail: Andrea Beard, Registration Division (7505C), Office of Pesticide Programs, Environmental Protection Agency, 401 M St., SW., Washington, DC 20460. Office location, telephone number, and e-mail: Rm. 267, Crystal Mall #2, 1921 Jefferson Davis Highway, Arlington, VA, (703–308–9356); e-mail: beard.andrea@epamail.epa.gov.

SUPPLEMENTARY INFORMATION: Pursuant to section 18 of the Federal Insecticide, Fungicide, and Rodenticide Act (FIFRA) (7 U.S.C. 136p), the Administrator may, at her discretion, exempt a state agency from any registration provision of FIFRA if she determines that emergency conditions exist which require such exemption. The Applicant has requested the Administrator to issue specific exemptions for the use of pyriproxyfen and buprofezin on citrus to control California Red Scale. Information in

accordance with 40 CFR part 166 was submitted as part of this request.

The Applicant states that California Red Scale is a key pest of citrus, and the single most costly pest to control. The Applicant states that in the past, treatments were not required every year for this pest, but in recent years resistance to the registered materials has built up and growers have had to treat up to three times in a single year. Alternative methods of control (parasite releases and packing house washers) are applied where feasible; however, the Applicant asserts that a a different chemistry with a different mode of action is necessary to control the scale. The Applicant asserts that with continued frequent use of currrently registered materials, increased resistance is likely, and these materials will quickly become wholy ineffective, leaving growers with no tools to control these damaging pests. The Applicant states that without adequate control of scale in citrus, significant economic losses are expected. The Applicant indicates that one application of either one or the other of the requested chemicals would not provide adequate control throughout the season, and since application of either would be limited to one, is requesting the use of both materials.

The Applicant proposes to apply pyriproxyfen at a rate of 0.108 lb. active ingredient (a.i.) per acre with a maximum of one application per crop season on up to 45,000 acres of citrus. The Applicant proposes to apply buprofezin at a maximum rate of 2.0 lbs. a.i. per acre with a maximum of one application per crop season on up to 45,000 acres of cotton. Therefore, use under these exemptions could potentially amount to a maximum total of 4,860 lbs. of pyriproxyfen and 90,000 lbs. of buprofezin.

This notice does not constitute a decision by EPA on the application itself. The regulations governing section 18 require publication of a notice of receipt in the **Federal Register** for an application for a specific exemption proposing the first food use of an active ingredient, or for use of a new (unregistered) chemical. Such notice provides for opportunity for public comment on the application.

The official record for this notice, as well as the public version, has been established for this notice under docket number [OPP–181055] (including comments and data submitted electronically as described below). A public version of this record, including printed, paper versions of electronic comments, which does not include any information claimed as CBI is available for inspection from 8:30 a.m. to 4 p.m., Monday through Friday, excluding legal holidays. The official notice record is located at the address in ''ADDRESSES''at the beginning of this document.

Electronic comments can be sent directly to EPA at: opp-docket@epamail.epa.gov

Electronic comments must be submitted as an ASCII file avoiding the use of special characters and any form of encryption. Comments and data will also be accepted on disks in WordPerfect in 5.1/6.1 or ASCII file format. All comments and data in electronic form must be identified by the docket number [OPP–181055]. Electronic comments on this notice may be filed online at many Federal Depository Libraries.

The Agency, accordingly, will review and consider all comments received during the comment period in determining whether to issue the emergency exemption requested by the California Department of Pesticide Regulation.

List of Subjects

Environmental protection, Pesticides and pests, Emergency exemptions.

Dated: March 12, 1998

James Jones,

Director, Registration Division, Office of Pesticide Programs.

[FR Doc. 98–7302 Filed 3–24–98; 8:45 am]

BILLING CODE 6560–50–F

ENVIRONMENTAL PROTECTION AGENCY

[OPP–181054; FRL 5778–5]

Pyriproxyfen and Buprofezin; Receipt of Application for Emergency Exemptions, Solicitation of Public Comment

AGENCY: Environmental Protection Agency (EPA).

ACTION: Notice.

SUMMARY: EPA has received specific exemption requests from the Arizona Department of Agriculture (hereafter referred to as the ''Applicant'') to use the insect growth regulators pyriproxyfen (CAS 95737–68–1) and buprofezin (CAS 69327–76–0) to treat up to 430,000 acres of cotton to control the sweet potato, or silverleaf whitefly *Bemesia species*. In the case of pyriproxyfen, the Applicant proposes the first food use of an active ingredient. Buprofezin is an unregistered material, and its proposed use is thus use of a ''new'' chemical. Therefore, in accordance with 40 CFR 166.24, EPA is soliciting public comment before making the decision whether or not to grant the exemptions.

DATES: Comments must be received on or before April 9, 1998.

ADDRESSES: Three copies of written comments, bearing the identification notation ''OPP–181054,'' should be submitted by mail to: Public Information and Records Integrity Branch, Information Resources and Services Division (7502C), Office of Pesticide Programs, Environmental Protection Agency, 401 M St., SW., Washington, DC 20460. In person, bring comments to: Rm. 119, Crystal Mall #2, 1921 Jefferson Davis Highway, Arlington, VA.

Comments and data may also be submitted electronically to: opp-docket@epamail.epa.gov. Follow the instruction under ''SUPPLEMENTARY INFORMATION.'' No Confidential Business Information (CBI) should be submitted through e-mail.

Information submitted in any comment concerning this notice may be claimed confidential by marking any part or all of that information as CBI. Information so marked will not be disclosed except in accordance with procedures set forth in 40 CFR part 2. A copy of the comment that does not contain CBI must be submitted for inclusion in the public record. Information not marked confidential may be included in the public record by EPA without prior notice. The public docket is available for public inspection in Rm. 119, Crystal Mall #2, 1921 Jefferson Davis Highway, Arlington, VA, from 8:30 a.m. to 4 p.m., Monday through Friday, excluding legal holidays.

FOR FURTHER INFORMATION CONTACT: By mail: Andrea Beard, Registration Division (7505C), Office of Pesticide Programs, Environmental Protection Agency, 401 M St., SW., Washington, DC 20460. Office location, telephone number and e-mail: Rm. 267, Crystal Mall #2, 1921 Jefferson Davis Highway, Arlington, VA, (703–308–9356); e-mail: beard.andrea@epamail.epa.gov.

SUPPLEMENTARY INFORMATION: Pursuant to section 18 of the Federal Insecticide, Fungicide, and Rodenticide Act (FIFRA) (7 U.S.C. 136p), the Administrator may, at her discretion, exempt a state agency from any registration provision of FIFRA if she determines that emergency conditions exist which require such exemption. The Applicant has requested the Administrator to issue specific exemptions for the use of pyriproxyfen

and buprofezin on cotton to control the sweet potato, or silverleaf whitefly (SLW). Information in accordance with 40 CFR part 166 was submitted as part of this request.

The Applicant states that a new strain or possibly a new species, of whitefly, often referred to as the strain B of sweet potato whitefly, or silverleaf whitefly (SLW), has been a major pest of cotton in Arizona since the early 1990s, and since that time, has caused extensive damage to cotton and vegetable crops. The Applicant claims that adequate control of the SLW is not being achieved with currently registered products and alternative cultural practices. The Applicant points out that large populations of whitefly have demonstrated resistance to available insecticidal control. The Applicant indicates that one application of either one or the other of the requested chemicals would not provide adequate control throughout the season, and since application of either would be limited to one, is requesting the use of both materials. The Applicant indicates that without adequate control of the SLW in cotton, significant economic losses will be suffered.

The Applicant proposes to apply pyriproxyfen at a rate of 0.054 lb. active ingredient (a.i.) per acre with a maximum of one application per crop season on up to 430,000 acres of cotton. The Applicant proposes to apply buprofezin at a rate of 0.35 lb., a.i. per acre with a maximum of one application per crop season on up to 430,000 acres of cotton. Therefore, use under these exemptions could potentially amount to a maximum total of 23,200 lbs. of pyriproxyfen and 150,500 lbs. of buprofezin.

This notice does not constitute a decision by EPA on the application itself. The regulations governing section 18 require publication of a notice of receipt in the **Federal Register** for an application for a specific exemption proposing the first food use of an active ingredient, or for use of a new (unregistered) chemical. Such notice provides for opportunity for public comment on the application.

The official record for this notice, as well as the public version, has been established for this notice under docket control number [OPP–181054] (including comments and data submitted electronically as described below). A public version of this record, including printed, paper versions of electronic comments, which does not include any information claimed as CBI is available for inspection from 8:30 a.m. to 4 p.m., Monday through Friday, excluding legal holidays. The official notice record is located at the address in ''ADDRESSES'' at the beginning of this document.

Electronic comments can be sent directly to EPA at: opp-docket@epamail.epa.gov

Electronic comments must be submitted as an ASCII file avoiding the use of special characters and any form of encryption. Comments and data will also be accepted on disks in WordPerfect 5.1/6.1 or ASCII file format. All comments and data in electronic form must be identified by the docket number [OPP–181054]. Electronic comments on this notice may be filed online at many Federal Depository Libraries.

The Agency, accordingly, will review and consider all comments received during the comment period in determining whether to issue the emergency exemption requested by the Arizona Department of Agriculture.

List of Subjects

Environmental protection, Pesticides and pests, Emergency exemptions.

Dated: March 12, 1998

James Jones,

Director, Registration Division, Office of Pesticide Programs.

[FR Doc. 98–7300 Filed 3–24–98; 8:45 am]

BILLING CODE 6560–50–F

FEDERAL COMMUNICATIONS COMMISSION

Notice of Public Information Collection(s) Being Reviewed by the Federal Communications Commission for Extension Under Delegated Authority; Comments Requested

March 19, 1998.

SUMMARY: The Federal Communications Commission, as part of its continuing effort to reduce paperwork burden invites the general public and other Federal agencies to take this opportunity to comment on the following information collection(s), as required by the Paperwork Reduction Act of 1995, Public. Law 104–13. An agency may not conduct or sponsor a collection of information unless it displays a currently valid control number. No person shall be subject to any penalty for failing to comply with a collection of information subject to the Paperwork Reduction Act (PRA) that does not display a valid control number. Comments are requested concerning (a) whether the proposed collection of information is necessary for the proper performance of the functions of the Commission, including whether the information shall have practical utility; (b) the accuracy of the Commission's burden estimate; (c) ways to enhance the quality, utility, and clarity of the information collected; and (d) ways to minimize the burden of the collection of information on the respondents, including the use of automated collection techniques or other forms of information technology.

DATES: Persons wishing to comment on this information collection should submit comments May 26, 1998.

ADDRESSES: Direct all comments to Judy Boley, Federal Communications Commissions, Room 234, 1919 M St., N.W., Washington, DC 20554 or via internet to jboley@fcc.gov.

FOR FURTHER INFORMATION CONTACT: For additional information or copies of the information collections contact Judy Boley at 202–418–0214 or via internet at jboley@fcc.gov.

SUPPLEMENTARY INFORMATION:

OMB Approval Number: 3060–0820.

Title: Amendment to Parts 22, 24, 27, 90, and 101 of the Commission's Rules Concerning Non-Substantial Assignments of Wireless Licenses and Transfers of Control Involving Telecommunications.

Form No.: FCC 490, FCC 702, FCC 704.

Type of Review: Extension of a currently approved collection.

Respondents: Businesses or other for-profit, individuals or households, not-for-profit institutions.

Number of Respondents: 1,600.

Estimated Time Per Response: 1 hour.

Estimated Cost per Respondent: N/A.

Total Annual Burden: 1,600 hours.

Frequency of Response: On occasion reporting requirement.

Needs and Uses: This information collection streamlines Commission procedures by allowing licensees, in certain specific circumstances, to complete pro forma assignments and transfers of control of licenses by selecting the less burdensome procedure of filing a letter after the transaction is complete.

Federal Communications Commission.

Magalie Roman Salas,

Secretary.

[FR Doc. 98–7705 Filed 3–24–98; 8:45 am]

BILLING CODE 6712–01–P

FEDERAL COMMUNICATIONS COMMISSION

Public Information Collection Approved by Office of Management and Budget

March 19, 1998.

The Federal Communications Commission (FCC) has received Office of Management and Budget (OMB) approval for the following public information collection pursuant to the Paperwork Reduction Act of 1995, Public Law 96–511. An agency may not conduct or sponsor a collection of information unless it displays a currently valid control number. Not withstanding any other provisions of law, no person shall be subject to any penalty for failing to comply with a collection of information subject to the Paperwork Reduction Act (PRA) that does not display a valid control number. Questions concerning the OMB control numbers and expiration dates should be directed to Judy Boley, Federal Communications Commission, (202) 418–0214.

Federal Communications Commission

OMB Control No.: 3060–0820.

Expiration Date: 9/30/1988.

Title: Amendments to Part 22, 24, 27, 90 and 101 of the Commissions Rules Concerning Non-Substantial Assignments of Wireless Licenses and Transfers of Control Involving Telecommunications.

Form No.: FCC 490, FCC 702, and FCC 704.

Estimated Annual Burden: 1,600 annual hours; 1 hour per respondent; 1,600 responses.

Description: This information collection streamlines Commission procedures by allowing licensees, in certain specific circumstances, to complete pro forma assignments and transfers of control of licenses by selecting the less burdensome procedure of filing a letter after the transaction is complete.

OMB Control No.: 3060–0635.

Expiration Date: 3/31/2000.

Title: Amateur Vanity Call Sign Request.

Form No.: 610–V.

Estimated Annual Burden: 26,400 annual hours; 20 minutes per respondent; 80,000 responses.

Description: FCC 610–V is used to apply for a vanity (special) call sign in lieu of a systematically issued call sign. Commission personnel use the data to determine the eligibility for the radio station authorization and to issue radio station/operator license.

Federal Communications Commission.

Magalie Roman Salas,

Secretary.

[FR Doc. 98–7704 Filed 3–24–98; 8:45 am]

BILLING CODE 6712–01–P

FEDERAL COMMUNICATIONS COMMISSION

Public Information Collection(s) Approved By Office of Management and Budget

March 19, 1998.

The Federal Communications Commission (FCC) has received Office of Management and Budget (OMB) approval for the following public information collection(s) pursuant to the Paperwork Reduction Act of 1995, 44 USC 3501–3520. An agency may not conduct or sponsor a collection of information unless it displays a currently valid control number. Notwithstanding any other provisions of law, no person shall be subject to any penalty for failing to comply with a collection of information subject to the Paperwork Reduction Act that does not display a valid control number. Questions concerning the OMB control numbers and expiration dates should be directed to Jerry Cowden, Federal Communications Commission, (202) 418–0447.

Federal Communications Commission

OMB Control No.: 3060–0314.

Expiration Date: 3/31/2001.

Title: Section 76.209—Fairness doctrine; personal attacks; political editorials.

Form Number: Not applicable.

Estimated annual burden: 3,411 hours; 2–3 hours per response; 1,312 respondents.

Description: Section 76.209 sets forth notification requirements for cable system operators when personal attacks are made on persons or groups during origination cablecasting. Section 76.209 also requires that when a cable system operator in an editorial endorses or opposes a legally qualified candidate, the operator shall, within 24 hours of the editorial, transmit to the other qualified candidate(s) for the same office or the candidate opposed, notification of the date, time and channel of the editorial; a script or tape of the editorial; and an offer of a reasonable opportunity to respond over the system's facilities.

OMB Control No.: 3060–0346.

Expiration Date: 3/31/2001.

Title: Section 78.27—License conditions.

Form Number: Not applicable.

Estimated Annual Burden: 76 hours; 0.167 hour per respondent; 455 respondents.

Description: Section 78.27 requires licensees of cable television relay service (CARS) stations to notify the Commission in writing when the station commences operation. It also requires a CARS licensee needing additional time to complete construction of the station to request an extension of time 30 days before the expiration of the one-year construction period.

OMB Control No.: 3060–0439.

Expiration Date: 3/31/2001.

Title: Regulations Concerning Indecent Communications by Telephone.

Form Number: Not applicable.

Estimated Annual Burden: 1,632 hours; 0.13 hour (average) per respondent; 10,200 respondents.

Description: The rules and regulations are designed to establish defenses to prosecution and to restrict access to adult message services by minors as required by Section 223 of the Communications Act of 1934, as amended. Section 64.201 contains several information collection requirements: (1) A requirement that certain common carriers block access to indecent messages unless the subscriber seeks access from the common carrier (telephone company) in writing; (2) a requirement that adult message service providers notify their carriers of the nature of their programming; and (3) a requirement that a provider of adult message services request that its carriers identify it as such in bills to its subscribers. Affected respondents are subscribers, common carriers, and providers of adult message services.

OMB Control No.: 3060–0491.

Expiration Date: 3/31/2001.

Title: Section 74.991—Wireless cable application procedures.

Form Number: Not applicable.

Estimated Annual Burden: 50 hours; 4.5 hours per respondent (0.5 hours respondent/4 hours attorney); 100 respondents.

Description: Section 74.991 requires that a wireless cable operator application be filed on FCC Forms 330/304. The applicant must also give local public notice in a daily newspaper of general circulation published in the community in which the proposed station will be located. The data is used by FCC staff to ensure that proposals to operate a wireless cable system on ITFS channels do not impair or restrict any reasonably foreseeable ITFS use.

OMB Control No.: 3060–0490.

Expiration Date: 3/31/2001.

Title: Section 74.902—Frequency assignments.

Form Number: Not applicable.

Estimated annual burden: 3 hours; 0.5 hour per response; 5 respondents.

Description: Section 74.902 requires that if an MDS applicant involuntarily displaces a point-to-point ITFS station operating on MDS Channels E and F to suitable spectrum, then the initiating MDS party must prepare and file the appropriate application. Additionally, Section 74.902(i) requires that a copy of this application be served on the ITFS licensee to be moved. The data will be used by the ITFS licensee to oppose the involuntary migration if the proposal would not provide comparable ITFS service and to ensure that the public continues to be served.

Federal Communications Commission.

Magalie Roman Salas,

Secretary.

[FR Doc. 98–7706 Filed 3–24–98; 8:45 am]

BILLING CODE 6712–01–P

FEDERAL MARITIME COMMISSION

Notice of Agreement(s) Filed

The Commission hereby gives notice of the filing of the following agreement(s) under the Shipping Act of 1984.

Interested parties can review or obtain copies of agreements at the Washington, DC offices of the Commission, 800 North Capitol Street, N.W., Room 962. Interested parties may submit comments on an agreement to the Secretary, Federal Maritime Commission, Washington, DC 20573, within 10 days of the date this notice appears in the **Federal Register.**

Agreement No.: 232–011615.

Title: Contship/CGM/Marfret Space Charter and Sailing Agreement.

Parties:

Contship Containerlines Limited

Compagnie Generale Maritime S.A.

Compagnie Marseille Fret

Synopsis: The proposed agreement authorizes Contship to charter vessels to the other parties for use under the agreement. The agreement also allows the parties to charter space to each other and to enter into related cooperative arrangements in the trade between ports in North Europe, the Mediterranean, the Red Sea, Asia, and Australia and New Zealand, and inland points served via those ports, on the one hand, and ports on the U.S. Atlantic Coast, including inland points served via those ports.

Dated: March 19, 1998.

By Order of the Federal Maritime Commission.

Joseph C. Polking,

Secretary.

[FR Doc. 98–7679 Filed 3–24–98; 8:45 am]

BILLING CODE 6730–01–M

FEDERAL MARITIME COMMISSION

Ocean Freight Forwarder License; Applicants

Notice is hereby given that the following applicants have filed with the Federal Maritime Commission applications for licenses as ocean freight forwarders pursuant to section 19 of the Shipping Act of 1984 (46 U.S.C. app. 1718 and 46 CFR 510).

Persons knowing of any reason why any of the following applicants should not receive a license are requested to contact the Office of Freight Forwarders, Federal Maritime Commission, Washington, D.C. 20573.

Sterling International Freight Forwarders, 2351 Jay Street, New Orleans, LA 70122, Linda Lee Lambert, Sole Proprietor

All-Links Freight Co., 5250 W. Century Blvd., #434, Los Angeles, CA 90045, Yung Hoon Kim, Sole Proprietor

Strong Forwarding, 8311 Pat Blvd., Tampa, FL 33615, Cindy Ellen Strong, Sole Proprietor

Express Air Cargo, Inc., 5242½ W. 104th Street, Los Angeles, CA 90045, Officers: Tom Aoyagi, President, Karen Aoyagi, Secretary

Straight Forwarding, 7441 N.W. 8th Street, Miami, FL 33126, Officer: Ilan Friedman, President

J K Forwarding, 17925 S. Santa Fe Avenue, Rancho Dominguez, CA 90221, Kathleen M. Hogan, Sole Proprietor

Kintetsu World Express (U.S.A.), Inc., 66 Powerhouse Road, Roslyn Height, NY 11577–1324, Officers: Hirokazu Tsujimoto, President, Tokiji Shinokawa, First Sr. Vice President

Dated: March 19, 1998.

Joseph C. Polking,

Secretary.

[FR Doc. 98–7678 Filed 3–24–98; 8:45 am]

BILLING CODE 6730–01–M

FEDERAL RESERVE SYSTEM

Formations of, Acquisitions by, and Mergers of Bank Holding Companies

The companies listed in this notice have applied to the Board for approval, pursuant to the Bank Holding Company Act of 1956 (12 U.S.C. 1841 *et seq.*) (BHC Act), Regulation Y (12 CFR Part 225), and all other applicable statutes and regulations to become a bank holding company and/or to acquire the assets or the ownership of, control of, or the power to vote shares of a bank or bank holding company and all of the banks and nonbanking companies owned by the bank holding company, including the companies listed below.

The applications listed below, as well as other related filings required by the Board, are available for immediate inspection at the Federal Reserve Bank indicated. The application also will be available for inspection at the offices of the Board of Governors. Interested persons may express their views in writing on the standards enumerated in the BHC Act (12 U.S.C. 1842(c)). If the proposal also involves the acquisition of a nonbanking company, the review also includes whether the acquisition of the nonbanking company complies with the standards in section 4 of the BHC Act. Unless otherwise noted, nonbanking activities will be conducted throughout the United States.

Unless otherwise noted, comments regarding each of these applications must be received at the Reserve Bank indicated or the offices of the Board of Governors not later than April 20, 1998.

A. Federal Reserve Bank of New York (Betsy Buttrill White, Senior Vice President) 33 Liberty Street, New York, New York 10045-0001:

1. Interchange Financial Services Corporation, Saddle Brook, New Jersey; to acquire 100 percent of the voting shares of The Jersey Bank for Savings, Montvale, New Jersey.

B. Federal Reserve Bank of Atlanta (Lois Berthaume, Vice President) 104 Marietta Street, N.W., Atlanta, Georgia 30303-2713:

1. Regions Financial Corporation, Birmingham, Alabama; to merge with First Commercial Corporation, Little Rock, Arkansas, and thereby indirectly acquire First Commercial Bank, N.A., Little Rock, Arkansas; Morrilton Security Bank, N.A., Morrilton, Arkansas; First National Bank of Russellville, Russellville, Arkansas; First National Bank of Conway, Conway, Arkansas; First Commercial Bank of Memphis, N.A., Memphis, Tennessee; The Security Bank, Harrison, Arkansas; Benton State Bank, Benton, Arkansas; Arkansas Bank and Trust Company, Hot Springs, Arkansas; Farmers and Merchants Bank, Rogers, Arkansas; Clinton State Bank, Clinton, Arkansas; Tyler Bank and Trust, N.A., Tyler, Texas; Lufkin National Bank, Lufkin, Texas; Longview National Bank, Longview, Texas; Stone Fort National Bank of Nacogdoches, Nacogdoches, Texas; State First National Bank,

Texarkana, Texas; State First National Bank, Texarkana, Arkansas; Kilgore First National Bank, Kilgore, Texas; First National Bank of Palestine, Palestine, Texas; First National Bank of Nashville, Nashville, Arkansas; Citizens First Bank, El Dorado, Arkansas; Citizens First Bank, Fordyce, Arkansas; Citizens First Bank, Arkadelphia, Arkansas; Arkansas State Bank, Clarksville, Arkansas; First National Bank of Searcy, Searcy, Arkansas; First Bank of Arkansas, Jonesboro, Arkansas; Springhill Bancshares, Inc., Springhill, Louisiana, and its subsidiary, Springhill Bank and Trust Company, Springhill, Louisiana; and TRH Bank Group, Inc., Norman, Oklahoma, and its subsidiary, Security National Bank & Trust Company, Norman, Oklahoma, and Oklahoma National Bank of Duncan, Duncan, Oklahoma.

In connection with this application, Applicant has also applied to acquire First Commercial Mortgage Company, N.A., Little Rock, Arkansas, and thereby engage in making and servicing loans, pursuant to § 225.28(b)(1) of the Board's Regulation Y.

In addition Applicant has also applied to acquire First Commercial Trust Company, N.A., Little Rock, Arkansas, and thereby engage in trust department functions and related investment advisory activities, pursuant to §§ 225.28(b)(5) and 225.28(b)(6) of the Board's Regulation Y.

C. Federal Reserve Bank of St. Louis (Randall C. Sumner, Vice President) 411 Locust Street, St. Louis, Missouri 63102-2034:

1. Union Planters Corporation, Memphis, Tennessee, and its second tier subsidiary, Union Planters Holding Corporation, Memphis, Tennessee; to acquire 100 percent of the voting shares of and thereby merge with Magna Group, Inc., St. Louis, Missouri, and thereby indirectly acquire HBC Acquisition Sub, Inc., St. Louis, Missouri, and Magna Bank, National Association, St. Louis, Missouri.

In connection with this application, Applicants have also applied to acquire Magna Group, Inc., St. Louis, Missouri, and thereby indirectly acquire Charter Bank, S.B., Sparta, Illinois, and thereby engage in the operation of a thrift, pursuant to § 225.28(b)(4)(ii) of the Board's Regulation Y.

D. Federal Reserve Bank of Minneapolis (Karen L. Grandstrand, Vice President) 90 Hennepin Avenue, P.O. Box 291, Minneapolis, Minnesota 55480-0291:

1. Norwest Corporation, Minneapolis, Minnesota; to acquire 100 percent of the voting shares of First Bank of Grants, Grants, New Mexico.

E. Federal Reserve Bank of Kansas City (D. Michael Manies, Assistant Vice President) 925 Grand Avenue, Kansas City, Missouri 64198-0001:

1. Giltner Investment Partnership II, Ltd., Omaha, Nebraska, a *de novo* bank; to become a bank holding company by acquiring 60 percent of the voting shares of The Avoca Company, Omaha, Nebraska, and thereby indirectly acquire The Farmers State Bank of Nebraska, Bennet, Nebraska.

F. Federal Reserve Bank of San Francisco (Maria Villanueva, Manager of Analytical Support, Consumer Regulation Group) 101 Market Street, San Francisco, California 94105-1579:

1. Home Valley Bancorp, Cave Junction, Oregon; to become a bank holding company by acquiring 100 percent of the voting shares of Home Valley Bank, Cave Junction, Oregon.

Board of Governors of the Federal Reserve System, March 20, 1998.

Jennifer J. Johnson,

Deputy Secretary of the Board.

[FR Doc. 98–7807 Filed 3–24–98; 8:45 am]

BILLING CODE 6210–01–F

FEDERAL SERVICE IMPASSES PANEL

Notice of Proposed Agency Information Collection Activity; Request for Public Comment

AGENCY: Federal Service Impasses Panel.

ACTION: Notice.

SUMMARY: The Federal Service Impasses Panel (Panel) is soliciting public comments on FLRA Form 14, Request for Assistance, as described below, prior to submission of the proposal to the Office of Management and Budget (OMB) for review as required by the Paperwork Reduction Act of 1995 (44 U.S.C. Chapter 35, as amended).

DATES: Comments due: May 26, 1998.

ADDRESSES: Interested persons are invited to submit comments regarding this proposal. Comments should refer to the proposal by name and should be sent to: H. Joseph Schimansky, Executive Director, Federal Service Impasses Panel, 607 14th St., N.W., Suite 220, Washington, D.C. 20424–0001.

FOR FURTHER INFORMATION CONTACT: Requests for additional information or copies of the proposed information collection should be directed to H. Joseph Schimansky, Executive Director, Federal Service Impasses Panel, (202) 482–6670, 607 14th St., N.W., Suite 220, Washington, D.C. 20424–0001.

SUPPLEMENTARY INFORMATION: The Panel will submit the proposed information collection to OMB for review, as required by the Paperwork Reduction Act of 1995.

This Notice solicits comments from members of the public and affected agencies concerning the proposed collection of information. The comments will be used to: (1) Evaluate whether the proposed collection of information is necessary for the proper performance of the functions of the Panel, including whether the information will have practical utility; (2) evaluate the accuracy of the Panel's estimate of the burden of the proposed collection of information; (3) enhance the quality, utility, and clarity of the information to be collected; and (4) minimize the burden of the collection of information on those who are to respond.

This Notice also lists the following information:

Title of Proposal: Request for Assistance.

OMB Number: 3070–0007.

Type of Review: Extension of a currently approved collection, with minor changes.

Description of the Need for the Information and Proposed Use: The information to be collected by FLRA 14, Request for Assistance, is required for the Panel to be able to process and decide collective bargaining impasses arising under the Federal Service Labor-Management Relations Statute, 5 U.S.C. § 7119. The information collected on the form is to be used to enable Panel staff employees to contact affected parties in impasse proceedings, and to enable staff employees to take the necessary steps to begin the processing of the Request for Assistance. The form will be provided to members of the public who request the form from the Panel, to enable those members of the public to initiate an impasse proceeding before the Panel. The petition form is filed with the Panel's office. Use of the form is not required to obtain Panel assistance, however, so long as the written request by a party for assistance contains the information requested on the form.

The document lists the following information: (1) The title of the information collection; (2) identification of the parties and individuals authorized to act on their behalf, including facsimile numbers; (3) statement of issues at impasse and the summary of positions of the initiating party or parties with respect to those issues; (4) a description of the bargaining unit along with the number of employees included; (5) the expiration date of the parties' labor

agreement; (6) the number, length, and dates of negotiation and mediation sessions held, including the nature and extent of all other voluntary arrangements utilized; (7) if approval of binding arbitration is requested, a statement as to whether any of the proposals to be submitted to the arbitrator contain questions concerning the duty to bargain, a statement of each party's position concerning such questions, and a description of the arbitration procedures to be used; (8) if the impasse arises from an agency determination not to establish or terminate a compressed work schedule under the Federal Employees Flexible and Compressed Work Schedules Act, the schedule or proposed schedule which is the subject of the agency's determination and the finding on which the determination is based, including, in the case where the finding is made by a duly authorized delegatee, evidence of a specific delegation of authority to make such a finding; (9) the name and signature of the party or parties filing the request; and (10) an estimate of the total annual reporting hours and record keeping burden.

Members of the Affected Public: Federal employees representing Federal agencies in their capacity as employer, and Federal employees and employees of labor organizations that are representing those labor organizations, are the members of the public who may file the Request for Assistance form.

Estimation of the Total Numbers of Hours Needed to Prepare the Information Collection: It should normally take a party no longer than one hour to complete the Request for Assistance form for filing with the Panel. In FY 1997, 148 requests for assistance were filed with the Panel.

Authority: Section 3506 of the Paperwork Reduction Act of 1995, 44 U.S.C. Chap. 35, as amended.

Dated: March, 19, 1998.

H. Joseph Schimansky,

Executive Director, Federal Service Impasses Panel.

[FR Doc. 98–7586 Filed 3–24–98; 8:45 am]

BILLING CODE 6727–01–P

FEDERAL TRADE COMMISSION

[File No. 972–3025]

Civic Development Group, Inc., et al.; Analysis To Aid Public Comment

AGENCY: Federal Trade Commission.

ACTION: Proposed consent agreement.

SUMMARY: The consent agreement in this matter settles alleged violations of federal law prohibiting unfair or deceptive acts or practices or unfair methods of competition. The attached Analysis to Aid Public Comment describes both the allegations in the draft complaint that accompanies the consent agreement and the terms of the consent order—embodied in the consent agreement—that would settle these allegations.

DATES: Comments must be received on or before May 26, 1998.

ADDRESSES: Comments should be directed to: FTC/Office of the Secretary, Room 159, 6th St. and Pa. Ave., N.W., Washington, D.C. 20580.

FOR FURTHER INFORMATION CONTACT: Eileen Harrington or Hugh Stevenson, FTC/H–238, Washington, D.C. 20580. (202) 326–3127 or 326–3511.

SUPPLEMENTARY INFORMATION: Pursuant to Section 6(f) of the Federal Trade Commission Act, 38 Stat. 721, 15 U.S.C. 46 and Section 2.34 of the Commission's Rules of Practice (16 CFR 2.34), notice is hereby given that the above-captioned consent agreement containing a consent order to cease and desist, having been filed with and accepted, subject to final approval, by the Commission, has been placed on the public record for a period of sixty (60) days. The following Analysis to Aid Public Comment describes the terms of the consent agreement, and the allegations in the complaint. An electronic copy of the full text of the consent agreement package can be obtained from the FTC Home Page (for March 18, 1998), on the World Wide Web, at ''http://www.ftc.gov/os/actions97.htm.'' A paper copy can be obtained from the FTC Public Reference Room, Room H–130, Sixth Street and Pennsylvania Avenue, N.W., Washington, D.C. 20580, either in person or by calling (202) 326–3627. Public comment is invited. Such comments or views will be considered by the Commission and will be available for inspection and copying at its principal office in accordance with Section 4.9(b)(6)(ii) of the Commission's Rules of Practice (16 CFR 4.9(b)(6)(ii)).

Analysis of Proposed Consent Order To Aid Public Comment

The Federal Trade Commission (''Commission'') has accepted an agreement to a proposed consent order from Civic Development Group, Inc., and Community Network, Inc., corporations, and Scott Pasch and David Keezer, individually and as officers of Civic Development Group, Inc., and Richard McDonnell, individually and as an officer of Community Network, Inc. (''Respondents'').

The proposed consent order has been placed on the public record for sixty (60) days for reception of comments by interested persons. Comments received during this period will become part of the public record. After sixty (60) days, the Commission will again review the agreement and the comments received and will decide whether it should withdraw from the agreement or make final the agreement's proposed order.

This matter concerns representations made by Respondents when they solicit consumers by telephone to contribute money to the non-profit organization, the American Deputy Sheriffs' Association (''ADSA'').

The Commission's complaint in this matter charges Respondents with engaging in unfair or deceptive acts or practices in connection with soliciting consumers by telephone to contribute to the ADSA. According to the complaint, in the course of making such solicitations, Respondents misrepresent to consumers that: money contributed by consumers to the ADSA had in the past benefitted law enforcement offices in the town, city, county, or state in which the consumers reside; money contributed to the ADSA by consumers had been used in the past to purchase bullet-proof vests for law enforcement offices in the town, city, county, or state in which the consumers reside, and money contributed to the ADSA by consumers had been used in the past to pay death benefits to the survivors of deceased law enforcement officers who resided or worked in the town, city, county, or state in which the consumers reside.

The complaint also alleges that Respondents misrepresented that: Money contributed to the ADSA by consumers would be used to benefit law enforcement offices in the town, city, county, or state in which the consumers reside; money contributed to the ADSA by consumers would be used to purchase bullet-proof vests for law enforcement offices in the town, city, county, or state in which the consumers reside; and money contributed to the ADSA by consumers would be used to pay death benefits to the survivors of deceased law enforcement officers who reside or work in the town, city, county, or state in which the consumers reside.

The consent order contains provisions designed to remedy the violations charged and to prevent Respondents from engaging in similar deceptive or unfair acts or practices in the future.

Paragraph I of the order prohibits Respondents, in connection with a telephone solicitation, from misrepresenting the purpose for which

charitable contribution has been or will be used.

Paragraph II of the order prohibits Respondents, in connection with a telephone solicitation, from misrepresenting the geographic location of the charity, organization or program that has benefitted or will benefit from the charitable contribution.

Paragraph III of the order prohibits Respondents, in connection with a telephone solicitation, from misrepresenting any fact material to the decision of any person to make a charitable contribution.

Paragraph IV of the order requires that Respondents, in connection with telephone solicitations, adopt an education and monitoring program designed to ensure compliance with Paragraph I through III of the order. As part of this education and monitoring program, Respondents must tape-record and review 1,000 solicitation telephone calls every thirty days.

Paragraph V of the order provides that in any action brought by the Commission to enforce the order, unless Respondents know or reasonably should have known of the violation, there shall be a rebuttable presumption that Respondents exercised good faith in complying with Parts I through III of the order, if Respondents show by a preponderance of the evidence that they have established and maintained the education and monitoring program mandated in Paragraph IV of the order.

Paragraph VI of the order requires Respondents, for a period of five (5) years, to maintain and permit representatives of the Commission access to Respondents' business premises to inspect and copy all documents relating in any way to any conduct that is the subject of this order.

Paragraph VII of the order requires that Respondents, for a period of five (5) years, permit representatives of the Commission to interview and depose, under oath, at the Respondents' business premises, the officers, directors, or employees of any such business with regard to compliance with the terms of this order.

Paragraph VIII of the order prohibits Respondents from providing the means and instrumentalities to, or otherwise assisting and facilitating any person who Respondents know or should know makes false or misleading representations about the purpose for which charitable contributions have been or will be used, the geographic location of the charity, organization or program that has benefitted or will benefit from charitable contributions or any fact material to any person to make any charitable contribution.

Paragraph IX of the order requires that Respondents, for a period of five (5) years from the date of entry of the order, deliver a copy of the order to all current and future principals, officers, directors, and managers of Respondents' companies or of any affiliated companies having responsibilities with respect to the subject matter of the order, and shall secure from each such person a signed and dated statement acknowledging receipt of the order.

Paragraph X of the order requires that Respondents Civic Development Group, Inc. and Community Network, Inc. notify the Commission at least thirty (30) days prior to any change in the corporation(s) that may affect compliance obligations arising under this order. Provided, however, that, with respect to any proposed change in the corporation about which Respondents learn less than thirty (30) days prior to the date such action is to take place, Respondents shall notify the Commission as soon as is practicable after obtaining such knowledge.

Paragraph XI of the order requires that Respondents Community Network, Inc., Civic Development Group, Inc., and their successors and assigns and Respondents Scott Pasch, David Keezer, and Richard McDonnell, within sixth (60) days after the date of service of the order, and again 180 days following entry of the order, and again at such other times as the Federal Trade Commission may require, file with the Commission a report, in writing, setting forth in detail the manner and form in which they have complied with this order.

Paragraph XII of the order requires that Respondents Scott Pasch, David Keezer, and Richard McDonnell, for a period of ten (10) years after the date of issuance of the order, notify the Commission of the discontinuance of their current business or employment, or of their affiliation with any new business or employment.

Paragraph XIII of the order provides for a twenty (20) year sunset provision.

The purpose of this analysis is to facilitate public comment on the proposed order, and it is not intended to constitute an official interpretation of the agreement and proposed order, or to modify any of their terms.

By direction of the Commission, Commissioner Azcuenaga and Commissioner Swindle not participating.

Donald S. Clark,

Secretary.

Statement of Chairman Robert Pitofsky and Commissioner Sheila F. Anthony

Today, we issue the attached administrative settlement for public comment. The proposed agreement would resolve serious allegations about misrepresentations made by respondents in connection with their telephone fundraising efforts on behalf of a non-profit organization. We present our views on one particular provision in the proposed Order to ensure that it is not misconstrued to suggest to some that the Commission is steering in a new direction.

Part V of the Order provides respondents with a limited rebuttable presumption that they have exercised good faith in complying with key injunctive provisions of the Order, if respondents show, by a preponderance of the evidence, that they have established and maintained the education and compliance program mandated in Part IV. In this case, including this provision is acceptable.

Part IV of the Order establishes numerous and significant monitoring and education requirements designed to ensure that respondents make no deceptive representations in connection with any charitable solicitations by telephone. These requirements include, but are not limited to: disseminating a brochure that discusses the obligations of a professional fundraiser to current and future employees and agents (Part IV.A); monitoring a random and representative sample of employees and agents in each location from which solicitations are made to ensure compliance with the injunctive provisions (Part IV.C); and taping a random and representative sample of telephone solicitations in each location in which solicitations are made and reviewing a random sample of at least 1000 such calls every 30 days to ensure compliance with the injunctive provisions (Part IV.D). Part IV.E further requires that respondents terminate any employee or agent who makes more than one material representation that violates the injunctive provisions in any consecutive twelve-month period.

Given the circumstances of this case as well as the strength and scope of the monitoring and education requirements in Part IV, we are of the view that the limited rebuttable presumption delineated in Part V is acceptable. (Under current law, good faith is among those factors relevant to determining an appropriate civil penalty amount where an order has been violated. See *United States* v. *Danube Carpet Mills, Inc.* 737 F.2d 998, 993–94 (11th Cir. 1984); *United States* v. *Reader's Digest Ass'n,* 662 F.2d 955, 967–68 (3d Cir. 1981), *cert, denied,* 455 U.S. 908 (1982)). This provision does not establish a defense to any subsequent enforcement actions. Similarly, it in no way precludes the

Commission from taking action should it determine that respondents are not in full compliance with any final order. Furthermore, the Commission continues to adhere to its Policy Statement Concerning Errors and Omissions Clauses in Consent Decrees, 59 F.R. 34440 (July 5, 1994). We consider it highly unlikely that other facts would present themselves—in the administrative or federal court context—that would warrant application of the same or a similar rebuttable presumption.

Statement of Commissioner Mozelle W. Thompson

I am writing to express my concurrence with the Statement of Chairman Robert Pitofsky and Commissioner Sheila F. Anthony on the proposed consent agreement that the Commission accepted today for public comment in *Civic Development Group, Inc.* I have voted to support this proposed agreement in recognition of the allegation of serious harm caused by respondents through their fraudulent telemarketing fundraising and the need to place such respondents under order. However, one provision of the order raises issues addressed by my two aforementioned colleagues and that I wish also to address through this Statement.

Part V of the Order in *Civic Development Group* states that in any Commission action to enforce the order, ''there shall be a rebuttable presumption that the respondents have exercised good faith in complying with [substantive provisions of the order] if the respondents show, by a preponderance of the evidence, that they have established and maintained the education and compliance program mandated in Paragraph IV of the order * * *.''

I question the propriety of accepting a consent agreement that results in shifting the burden of proof to benefit a party that the Commission is claiming engaged in unlawful conduct. There are serious risks in permitting any party or adjudicative body to interfere with the Commission's well-supported prosecutorial discretion, and it could be argued that the limited rebuttable presumption in Part V allows respondent's compliance with the procedural requirements to detract from the Commission's ability to pursue substantive violations.

For purposes of this case only, I accept the order's burden-shifting provision and concur with the Chairman, Commissioner Anthony, and staff that this order is acceptable based on the unique and specialized aspects of this case. Accordingly, in my view, the order presented here should not be regarded as having precedential value.

I trust that staff will continue to work closely with the company to monitor its compliance with the stringent requirements of Part IV as well as all other requirements of the order.

[FR Doc. 98–7700 Filed 3–24–98; 8:45 am]

BILLING CODE 6750–01–M

DEPARTMENT OF HEALTH AND HUMAN SERVICES

Centers for Disease Control and Prevention

Healthy People 2010 Planning Process; Amendment

A notice published in the **Federal Register** on February 17, 1998 [63 FR 7810]. The notice is amended as follows:

On page 7810, third column, under the heading **SUPPLEMENTARY INFORMATION** on line 27, website is incorrect. It should read at http://www.cdc.gov/nceh/programs/hp2010/

All other information and requirements of the February 17, 1998, notice remain the same.

Dated: March 19, 1998.

Joseph R. Carter,

Acting Associate Director for Management and Operations, Centers for Disease Control and Prevention (CDC).

[FR Doc. 98–7691 Filed 3–24–98; 8:45 am]

BILLING CODE 4163–18–U

DEPARTMENT OF HEALTH AND HUMAN SERVICES

Food and Drug Administration

[Docket No. 97N–0456]

Agency Information Collection Activities; Submission for OMB Review; Comment Request

AGENCY: Food and Drug Administration, HHS.

ACTION: Notice.

SUMMARY: The Food and Drug Administration (FDA) is announcing that the proposed collection of information listed below has been submitted to the Office of Management and Budget (OMB) for review and clearance under the Paperwork Reduction Act of 1995 (the PRA).

DATES: Submit written comments on the collection of information by April 24, 1998.

ADDRESSES: Submit written comments on the collection of information to Office of Information and Regulatory Affairs, OMB, New Executive Office Bldg., 725 17th St. NW., rm. 10235, Washington, DC 20503, Attn: Desk Officer for FDA.

FOR FURTHER INFORMATION CONTACT: Karen L. Nelson, Office of Information Resources Management (HFA–250), Food and Drug Administration, 5600 Fishers Lane, Rockville, MD 20857, 301–827–1482.

SUPPLEMENTARY INFORMATION: In compliance with section 3507 of the PRA (44 U.S.C. 3507), FDA has submitted the following proposed collection of information to OMB for review and clearance.

Conditions for the Use of Narcotic Drugs for Treatment of Narcotic Addiction Reporting and Recordkeeping Requirements (21 CFR 291.505) (OMB Control Number 0910–0140—Reinstatement)

Section 303(g) of the Controlled Substances Act (21 U.S.C. 823(g)) provides for a separate controlled substances registration for practitioners who dispense narcotic drugs to individuals for maintenance treatment or detoxification treatment. This separate registration is conditioned on the Secretary of the Department of Health and Human Services (the Secretary) determining that the applicant is a practitioner who is qualified (under standards established by the Secretary) to engage in the treatment with respect to which registration is sought. Section 303(g) requires that the Secretary (and, by delegation, FDA and the National Institute of Drug Abuse): (1) Establish standards for practitioners who dispense narcotic drugs to persons for maintenance and/or detoxification treatment; (2) determine whether practitioners who wish to conduct such treatment are qualified under the standards; and (3) determine whether such practitioners will comply with the standards regarding the quantities of narcotic drugs that may be provided for unsupervised use by persons in such treatment.

Regulations found at 21 CFR 291.505 were issued under this authority. These regulations establish reporting requirements that include an application for approval of use of narcotic drugs in a narcotic addiction treatment program that must be submitted to, and approved by, FDA before the treatment program (which may be an individual or an organization) may receive shipments of narcotic drugs. Additional submissions are required when significant changes

are implemented by treatment programs; for some kinds of changes, the regulations require FDA preapproval of the change before it is implemented. Additional submissions and FDA preapproval are also required if a treatment program seeks an exemption from certain requirements. The regulations contain no periodic reporting requirements.

The regulations governing the use of narcotic drugs for treatment of addiction also contain recordkeeping requirements that codify usual and customary practices within the medical and rehabilitative communities. Because the records required by the regulations would be kept even without a regulatory requirement, the time and financial resources necessary to comply with the recordkeeping requirements have not been included in the burden estimate below (see 5 CFR 1320.3(b)(2)).

FDA is requesting approval of the following FDA forms:

(1) Form FDA–2632—''Application for Approval for Use of Narcotic Drugs in a Narcotic Addiction Treatment Program''. Organizations or individuals who wish to receive shipments of narcotic drugs for the treatment of narcotic addiction are required to submit this form in duplicate to FDA and to the appropriate State regulatory authority. All information and attachments to the application are required by the regulation. The application must include a list of personnel active in the program, such as physicians, nurses, and counselors; the names of hospitals, institutions, and analytical laboratories; and all other facilities used to provide necessary services required by the regulations. Form FDA–2632 is also used to report to FDA that a program will relocate, change the sponsor, or dispense Levo-Alpha-Acetyl-Methadol (LAAM);

(2) Form FDA–2633—''Medical Responsibility Statement for Use of Narcotic Drugs in a Treatment Program''. Each licensed physician authorized to administer or dispense narcotic drugs for the treatment of narcotic addiction must complete this form and submit it to FDA and to the appropriate State regulatory authority;

(3) Form FDA–2635—''Consent to Treatment with an Approved Narcotic Drug''. This form is to be completed by the practitioner and signed by the patient when the practitioner explains the treatment program to each new patient. The completed form becomes part of the patient's records and is not transmitted to FDA. Having a patient execute an informed consent form before undertaking a course of medical therapy, such as maintenance or detoxification, is usual and customary medical practice; and

(4) Form FDA–2636—''Hospital Request for Methadone Detoxification Treatment''. Before a hospital may receive shipments of methadone for detoxification treatment, a responsible official of the hospital must submit this form to FDA and to the appropriate State regulatory authority, and must have received a notice of approval from FDA. Form FDA–2636 is also used to inform FDA of changes in responsible hospital administrators.

Respondents to this information collection are sponsors and physicians for treatment programs, and hospital officials for hospital detoxification programs.

FDA estimates the burden of this collection of information as follows:

TABLE 1.—ESTIMATED ANNUAL REPORTING BURDEN[1]

Form	21 CFR Section	No. of Respondents	Annual Frequency per Response	Total Annual Responses	Time per Response	Total Hours
Form FDA–2632, Application for Approval for Use of Narcotic Drugs in a Narcotic Addiction Treatment Program (New Programs)	291.505(b)(1)(ii), (b)(2)(i), (b)(2)(vi), (b)(3)(i), (c)(3), (c)(4), (d)(2)(i), and (d)(4)(i)(D)	55	1	55	105 min	96.25
Form FDA–2632, Application for Approval for Use of Narcotic Drugs in a Narcotic Addiction Treatment Program (Relocation)	291.505(b)(1)(ii), (c)(4)	35	1	35	70 min	40.83
Form FDA–2632, Application for Approval for Use of Narcotic Drugs in a Narcotic Addiction Treatment Program (Sponsor Change)	291.505(c)(2)(ii),(c)(4)	60	1	60	20 min	20
Form FDA–2632, Application for Approval for Use of Narcotic Drugs in a Narcotic Addiction Treatment Program (Levo-Alpha-Acetyl-Methadol (LAAM) Use)	291.505(b)(2)(iv), (c)(4)	75	1	75	15 min	18.75
Form FDA–2633, Medical Responsibility Statement for Use of Narcotic Drugs in a Treatment Program	291.505(c)(4)	275	1	275	15 min	68.75
Form FDA–2636, Hospital Request for Methadone Detoxification Treatment (New Applicant)	291.505(f)(2)	20	1	20	10 min	3.33
Form FDA–2636, Hospital Request for Methadone Detoxification Treatment (Administrator Change)	291.505(f)(2)	5	1	5	10 min	0.83

TABLE 1.—ESTIMATED ANNUAL REPORTING BURDEN[1]—Continued

Form	21 CFR Section	No. of Respondents	Annual Frequency per Response	Total Annual Responses	Time per Response	Total Hours
Notifications of deletion of facility in which medication is administered	291.505(b)(2)(i)	45	1	45	15 min	11.25
Requests to change testing laboratory	291.505(d)(2)(i)	25	1	25	40 min	16.66
Reports of addition, modification, or deletion of any program services	291.505(d)(4)(i)(D)	32	1	32	15 min	8
Requests to allow patients to take home daily doses greater than 100 milligrams	291.505(d)(6)(v)(D)	600	1	600	15 min	150
Requests for exemptions from specific program standards	291.505(d)(11)	800	3	2,100	30 min	1,050
Requests for approval of a hospital as a temporary treatment program	291.505(f)(2)(i)	3	1	3	15 min	.75
Requests for alternative methods of distribution	291.505(j)(1)	5	1	5	30 min	2.5
TOTALS		2,035		3,335		1,487.9

[1] There are no capital costs or operating and maintenance costs associated with this collection of information.

Dated: March 18, 1998.

William K. Hubbard,

Associate Commissioner for Policy Coordination.

[FR Doc. 98–7665 Filed 3–24–98; 8:45 am]

BILLING CODE 4160–01–F

DEPARTMENT OF HOUSING AND URBAN DEVELOPMENT

[Docket No. FR–4349–N–09]

Notice of Submission of Proposed Information Collection to OMB

AGENCY: Office of Administration, HUD.

ACTION: Notice.

SUMMARY: The proposed information collection requirement described below has been submitted to the Office of Management and Budget (OMB) for emergency review and approval by March 27, 1998, as required by the Paperwork Reduction Act. The Department is soliciting public comments on the subject proposal.

DATES: The due date for comments is: March 27, 1998.

ADDRESSES: Interested persons are invited to submit comments regarding this proposal. Comments should refer to the proposal by name and should be sent to: Joseph F. Lackey, Jr., HUD Desk Officer, Office of Management and Budget, New Executive Office Building, Washington, DC 20503.

FOR FURTHER INFORMATION CONTACT: Wayne Eddins, Reports Management Officer, Department of Housing and Urban Development, 451 Seventh Street, SW, Washington, DC 20410, telephone (202) 708–0050. This is not a toll-free number. Copies of available documents submitted to OMB may be obtained from Mr. Eddins.

SUPPLEMENTARY INFORMATION: This Notice informs the public that the Department of Housing and Urban Development (HUD) has submitted to OMB, for emergency processing, an information collection package with respect to a proposed ''Request for Proposals—Contract Administrators for Project-Based Section 8 Housing Assistance Payments Contracts.'' This emergency processing is essential to provide for the immediate, ongoing, responsible administration of over 20,000 Section 8 contracts. These contracts represent a substantial investment to support the physical and financial well-being of affordable housing on a nation-wide basis. It is necessary for the Department to obtain the contract administration capability sought in the Request as soon as possible to ensure that the recent restructuring of the Department does not adversely affect this national investment, but instead, through Departmental oversight of successful bidders rather than direct, hands-on administration, results in improvements in the quality and affordability of the nation's housing stock.

The Department has submitted the proposal for the collection of information, as described below, to OMB for review, as required by the Paperwork Reduction Act (44 USC Chapter 35):

(1) Title of the information collection proposal:

''Request for Proposals—Contract Administrators for Project-Based Section 8 Housing Assistance Payments Contracts'' (Request)

(2) Summary of the collection of information:

Each party seeking to become a contract administrator under the Request would be required to submit current information, as listed below:

1. Name.
2. Address.
3. Geographic service area in which the applicant proposes to serve as contract administrator.
4. Documented evidence that, within the last two years immediately prior to the date of the proposal, the proposer has performed duties substantially similar to those provided for in the Request.
5. Description of the applicant's experience in conducting mortgage foreclosures or in related activities which would qualify the applicant to serve as a foreclosure commissioner.
6. Description of how the proposer has provided similar services in the past, and a detailed description of experience with oversight of multifamily residential portfolios.
7. The proposal must describe methods used to manage and control prior contracts or portfolios.
8. The proposal must provide the names, addresses and telephone numbers of all references.
9. The proposal must demonstrate a thorough understanding of HUD's requirements and ability and capacity to perform all of the duties and tasks required.

10. The proposal also must describe the proposer's experience with automated systems to support the services required (including accessibility, documentation, security, and flexibility).

11. The proposal must include sufficient information on the relevant experience, special training and education of proposed personnel related to the tasks to be performed.

12. The proposal must describe the method to be used to manage and control the tasks to be performed under the contract.

13. The proposal must include a quality assurance plan.

14. The proposal must provide a plan for the transfer of responsibility for contract administration from HUD to the Contract Administrator.

15. All proposers must include in their response the fixed, ongoing administrative fee per unit per month they propose for the first year of the ACC.

16. Selected Contract Administrators shall provide to HUD, by the 15th of each month, a report which includes the following information:

*Physical Inspections**

Number of inspections completed during month.

Cumulative percentage of assisted units.

Number with unacceptable ratings.

Number requiring remedial actions and type of action.

*Occupancy and Management**

Number of on-site management reviews completed during month.

Cumulative percentage of reviews completed.

Number of tenant files reviewed.

Cumulative percentage of reviews completed.

*Contract Rents**

Number of rent increases approved.

Number of budget-based rent increases approved.

Number of special rent adjustments reviewed.

Data Systems

Any problems.

Payment to Project Owners

Number of payments made after first of the month with number of days late and reason.

Annual Financial Statements

Number and status of problem cases noted by the Assessment Center.

Number of owners contacted for corrective actions.

Number of corrective actions outstanding (over 30 days late).

Status/progress of corrective actions.

Community/Resident Relations

Description of repeated complaints at any project and steps taken to resolve.

Steps taken to promote resident initiatives.

Loss Mitigation and General Project Servicing

Synopsis of support provided to HUD Centers.

Number of requests reviewed for releases from reserve for replacement account and residual receipts.

Other

Hot topics—Projects that required special attention due to such matters as abatement actions, excessive tenant complaints, inquiries from governmental officials or general public.

Any significant administrative actions that could affect the contract.

Major accomplishments, success stories, etc.

Noteworthy meetings.

Pending issues.

Year-End Reporting

Number of annual operating budgets, requisitions, and year-end statements submitted.

Percentage of required number.

* Where appropriate, the Contract Administrator shall give the project name and project number and submit copies of all reviews and inspections.

(3) Description of the need for the information and its proposed use:

The requested information is needed for HUD's selection of contract administrators to provide contract administration services for project-based Section 8 Housing Assistance Payments (HAP) contracts currently being administered directly by HUD staff. The Department is not providing any assurances of confidentiality.

(4) Description of the likely respondents, including the estimated number of likely respondents, and proposed frequency of response to the collection of information:

HUD will enter into an ACC only with a legal entity that meets one of the following qualifications:

1. A general or special purpose governmental entity, which includes a State, municipality, or public benefit corporation (including a housing authority).

2. A multi-state, regional or interstate entity which has governmental functions.

3. An existing or to be created for-profit or not-for-profit private entity acting as an instrumentality of a governmental entity, or multiple governmental entities, or any of them, acting in concert or partnership with a private entity (''private instrumentality''). Respondents will be entities with experience in real estate foreclosure procedures.

The estimated number of respondents is approximately 250. The estimated frequency of responses is estimated to be no more than three times during a three year period.

(5) Estimate of the total reporting and recordkeeping burden that will result from the collection of information:

Reporting Burden:

Number of Request respondents: 250.

Total burden hours (@ 20 hours per response): 5,000.

Number of Monthly Reporters: 10.

Number of Monthly Reports (Annual): 12.

Total burden hours (@ 5 hours per response): 600.

Total Estimated Annual Burden Hours: 5,600.

Authority: Section 3507 of the Paperwork Reduction Act of 1995, 44 U.S.C. Chapter 35, as amended.

Dated: March 20, 1998.

David S. Cristy

Director, IRM Policy and Management Division.

[FR Doc. 98–7914 Filed 3–23–98; 11:29 am]

BILLING CODE 4210–01–P

DEPARTMENT OF THE INTERIOR

Fish and Wildlife Service

Notice of Receipt of Application for Renewal for Endangered Species Permit

AGENCY: Fish and Wildlife Service, Interior.

ACTION: Notice of receipt.

The following applicant has applied for a permit to conduct certain activities with endangered species. This notice is provided pursuant to section 10(c) of the Endangered Species Act of 1973, as amended (16 U.S.C. 1531 *et seq.*):

Applicant: Assistant Regional Director, Ecological Services, U.S. Fish and Wildlife Service, Hadley, Massachusetts; PRT–697823.

This applicant requests renewal of their current permit for take activities for all listed species in the states of Connecticut, Delaware, Maine, Maryland, Massachusetts, New Hampshire, New Jersey, New York, Pennsylvania, Rhode Island, Vermont, Virginia, West Virginia and the District of Columbia for the purpose of scientific

research and enhancement of propagation or survival of the species as prescribed by Service recovery documents.

Written data or comments should be submitted to the Regional Endangered Species Permits Coordinator, U.S. Fish and Wildlife Service, 300 Westgate Center Drive, Hadley, Massachusetts 01035 and must be received within 30 days of the date of this publication.

Documents and other information submitted with this application are available for review, subject to the requirements of the Privacy Act and Freedom of Information Act, by any party who submits a written request for a copy of such documents to the following office within 30 days of the date of publication of this notice: U.S. Fish and Wildlife Service, 300 Westgate Center Drive, Hadley, Massachusetts 01035, Attention: Diane Lynch, Regional Endangered Species Permits Coordinator. Telephone: (413) 253–8628; FAX: (413) 253–8482.

Dated: March 16, 1998.

Cathy Short,

Deputy Regional Director, Region 5.

[FR Doc. 98–7670 Filed 3–24–98; 8:45 am]

BILLING CODE 4310–55–M

DEPARTMENT OF THE INTERIOR

Fish and Wildlife Service

Forum on Ecological Surveys of Aquatic Nuisance Species—Aquatic Nuisance Species Task Force

AGENCY: Fish and Wildlife Service, Interior.

ACTION: Notice of meeting.

SUMMARY: This notice announces the Forum on Ecological Surveys of Aquatic Nuisance Species. The 1996 amendments to the Nonindigenous Aquatic Nuisance Prevention and Control Act added a new subsection requiring that the Aquatic Nuisance Species (ANS) Task Force, in consultation with the U.S. Coast Guard, conduct ecological surveys in nationally significant estuaries and other waters that are highly susceptible to invasion by ANS resulting from ballast water operations and other operations of vessels and require further study. The surveys shall determine what nonindigenous aquatic species are present and estimate the effectiveness of ballast water and other vessel management guidelines and regulations in abating invasions. Studies of the Chesapeake Bay, San Francisco Bay, and Honolulu Harbor are specifically required.

DATES: The Workshop will be held from 8:30 a.m. to 5 p.m. on April 21, 1998.

ADDRESSES: The Workshop will be held at the Smithsonian Environmental Research Center, 647 Contees Wharf Road, Edgewater, Maryland 21037. Minutes of the meeting will be maintained by the Executive Secretary, ANS Task Force, U.S. Fish and Wildlife Service, 4401 North Fairfax Drive, Suite 840, Arlington, Virginia 22203–1622.

FOR FURTHER INFORMATION CONTACT: Craig A. Czarnecki, U.S. Fish and Wildlife Service, by telephone at 703–358–2025 or E-mail at craig__czarnecki@fws.gov or Dr. Gregory Ruiz, Smithsonian Environmental Research Center at 301–261–4190 (ext. 227) or E-mail at ruiz@serc.edu.

SUPPLEMENTARY INFORMATION: Pursuant to section 10(a)(2) of the Federal Advisory Committee Act (5 U.S.C. App. I), this notice announces the Forum on Ecological Surveys of Aquatic Nuisance Species pursuant to section 1102(b) of the Nonindigenous Aquatic Nuisance Prevention and Control Act of 1990 (16 U.S.C. 4701–4741).

The purposes of this meeting are to (1) provide background on the statutory requirements for ecological surveys, (2) provide an update on past, ongoing, and future studies with a similar focus, (3) discuss standardized approaches for conducting and disseminating results from future ecological surveys, and (4) identify strategies for synthesis and comprehensive analysis among completed surveys.

The meeting is open to the public. Interested persons may make oral statements at the meeting or submit written statements for consideration.

Dated: March 20, 1998.

Rowan Gould,

Acting Assistant Director—Fisheries, Co-Chair, Aquatic Nuisance Species Task Force.

[FR Doc. 98–7805 Filed 3–24–98; 8:45 am]

BILLING CODE 4310–55–M

DEPARTMENT OF THE INTERIOR

Fish and Wildlife Service

Correction to Location of Meeting

SUMMARY: Pursuant to section 10(a)(2) of the Federal Advisory Committee Act (5 U.S.C. App. I), this notice announces a meeting of the Klamath Fishery Management Council, established under the authority of the Klamath River Basin Fishery Resources Restoration Act (16 U.S.C. 460ss *et seq.*). The Klamath Fishery Management Council makes recommendations to agencies that regulate harvest of anadromous fish in the Klamath River Basin. The objective of this meeting is to develop management options for the 1998 Klamath fall chinook salmon season, to be presented to the Pacific Fisheries Management Council. The meeting is open to the public.

Dates: The Klamath Fishery Management Council will meet from 2:00 p.m. to 6:00 p.m. on Sunday, April 5.

Place: The meeting will be held at the Doubletree Hotel Columbia River, 1401 N. Hayden Island Drive, Portland, Oregon.

FOR FURTHER INFORMATION CONTACT: Dr. Ronald A. Iverson, Project Leader, U.S. Fish and Wildlife Service, P.O. Box 1006 (1215 South Main), Yreka, California 96097–1006, telephone (530) 842–5763.

SUPPLEMENTARY INFORMATION: For background information on the Klamath Council, please refer to the notice of their initial meeting that appeared in the **Federal Register** on July 8, 1987 (52 FR 25639).

Dated: March 18, 1998.

Cynthia U. Barry,

Acting Assistant Regional Director, Klamath/Central Pacific Coast Ecoregion.

[FR Doc. 98–7693 Filed 3–24–98; 8:45 am]

BILLING CODE 4310–55–P

DEPARTMENT OF THE INTERIOR

Bureau of Land Management

[OR–130–1020–00; GP8–0141]

Notice of Meeting of the Eastern Washington Resource Advisory Council

ACTION: Meeting of the Eastern Washington Resource Advisory Council; April 30, 1998, in Spokane, Washington.

SUMMARY: A meeting of the Eastern Washington Resource Advisory Council will be held on April 30, 1998. The meeting will convene at 8:00 a.m., at the Spokane District Office of the Bureau of Land Management, 1103 N. Fancher Road, Spokane, WA 99212. The meeting will adjourn upon conclusion of business, but no later than 4:00 p.m. Public comments will be heard from 10:00 a.m. until 10:30 a.m. If necessary to accommodate all wishing to make public comments, a time limit may be placed upon each speaker. At an appropriate time, the meeting will adjourn for approximately one hour for lunch. Topics to be discussed include: noxious weeds, the Interior Columbia Basin Ecosystem Management Project, implementation of Standards for

Rangeland Health and Guidelines for Livestock Grazing Management, riparian management, and land exchanges.

FOR FURTHER INFORMATION CONTACT: Richard Hubbard, Bureau of Land Management, Spokane District Office, 1103 N. Fancher Road, Spokane, Washington 99212; or call 509–536–1200.

Dated: March 19, 1998.

Joseph K. Buesing,

District Manager.

[FR Doc. 98–7692 Filed 3–24–98; 8:45 am]

BILLING CODE 4310–33–P

DEPARTMENT OF THE INTERIOR

Bureau of Land Management

[OR–050–1430–00; GP8–0060]

Notice of Realty Action; Recreation and Public Purposes (R&PP) Act Classification; Oregon

AGENCY: Bureau of Land Management, Prineville District.

ACTION: Notice.

SUMMARY: The following public lands in Deschutes County, Oregon have been examined and found suitable for classification for lease or conveyance to the City of Redmond under the provisions of the Recreation and Public Purposes Act, as amended (43 U.S.C. 869 *et seq.*). The City of Redmond proposes to use the lands for a golf course.

Willamette Meridian

T. 15 S., R. 13 E.,

Sec. 32, NE¼, SE¼NW¼,that portion lying east of the railroad and power line

Containing 181.34 acres, more or less.

The lands are not needed for Federal purposes. The lease or conveyance is consistent with current BLM land use planning and would be in the public interest.

The lease or patent, when issued, will be subject to the following terms and conditions:

1. Provisions of the Recreation and Public Purposes Act and to all applicable regulations of the Secretary of the Interior.

2. A right-of-way for ditches and canals constructed by the authority of the United States.

3. All minerals shall be reserved to the United States, together with the right to prospect for, mine, and remove the minerals.

Detailed information concerning this action is available for review at the Office of the Bureau of Land Management, Prineville District, 3050 NE Third, Prineville, Oregon, 97754.

Upon publication of this notice in the **Federal Register** the lands will be segregated from all other forms of appropriation under the public lands laws, including the general mining laws, except for lease under the Recreation and Public Purposes Act and leasing under the mineral leasing laws. For a period of 45 days from the date of publication of this notice in the **Federal Register**, interested persons may submit comments regarding the proposed lease or classification of the lands to the District Manager, Prineville District Office, P.O. Box 550, Prineville, Oregon 97754.

Classification Comments. Interested parties may submit written comments regarding the specific use proposed in the application and plan of development, whether the BLM followed proper administrative procedures in reaching the decision, or any other factor not directly related to the suitability of the land for a rodeo grounds.

Any adverse comments will be reviewed by the State Directory. In the absence of any adverse comments, the classification will become effective 60 days from the date of publication of this notice in the **Federal Register**.

Dated: March 11, 1998.

James L. Hancock,

District Manager.

[FR Doc. 98–7738 Filed 3–24–98; 8:45 am]

BILLING CODE 4310–33–M

DEPARTMENT OF THE INTERIOR

Bureau of Land Management

[UTU–51515, UTU–54044, UTU–56984]

Utah; Proposed Reinstatement of Terminated Oil and Gas Leases

In accordance with Title IV of the Federal Oil and Gas Royalty Management Act (Pub. L. 97–451), a petition for reinstatement of oil and gas leases UTU–51515, UTU–54044, and UTU–56984 for lands in Summit County, Utah, was timely filed and required rentals accruing from October 1, 1998, the date of termination, have been paid.

The lessees have agreed to new lease terms for rentals and royalties at rates of $5 per acre and 16⅔ percent, respectively. The $500 administrative fee in the amount of $500 for each lease has been paid and the lessees have reimbursed the Bureau of Land Management for the cost of publishing this notice.

Having met all the requirements for reinstatement of these leases as set out in Section 31 (d) and (e) of the Mineral Leasing Act of 1920 (30 U.S.C. 188), the Bureau of Land Management is proposing to reinstate leases UTU–51515, UTU–54044, and UTU–56984, effective October 1, 1997, subject to the original terms and conditions of the leases and the increased rental and royalty rate cited above.

Robert Lopez,

Group Leader, Minerals Adjudication Group.

[FR Doc. 98–7696 Filed 3–24–98; 8:45 am]

BILLING CODE 4310–DQ–M

DEPARTMENT OF THE INTERIOR

Minerals Management Service

Notice on Outer Continental Shelf Oil and Gas Lease Sales

AGENCY: Minerals Management Service, Interior.

ACTION: List of restricted joint bidders.

SUMMARY: Pursuant to the authority vested in the Director of the Minerals Management Service by the joint bidding provisions of 30 CFR 256.41, each entity within one of the following groups shall be restricted from bidding with any entity in any other of the following groups at Outer Continental Shelf oil and gas lease sales to be held during the bidding period from May 1, 1998, through October 31, 1998. The List of Restricted Joint Bidders published October 9, 1997, in the **Federal Register** at 62 FR 52771 covered the period of November 1, 1997, through April 30, 1998.

Group I. Exxon Corporation; and Exxon San Joaquin Production Co.

Group II. Shell Oil Co.; Shell Offshore Inc.; Shell Western E&P Inc.; Shell Frontier Oil & Gas Inc.; Shell Consolidated Energy Resources Inc.; Shell Land & Energy Company; Shell Onshore Ventures Inc.; Shell Deepwater Development Inc.; Shell Deepwater Production Inc.; Shell Offshore Properties; and Capital II, Inc.

Group III. Mobil Oil Corp.; Mobil Oil Exploration and Producing Southeast Inc.; Mobil Producing Texas and New Mexico Inc.; Mobil Exploration and Producing North America Inc.

Group IV. BP America Inc.; The Standard Oil Co.; BP Exploration & Oil Inc.; and BP Exploration (Alaska) Inc.

Dated: March 19, 1998.

Cynthia Quarterman,

Director, Minerals Management Service.

FR Doc. 98–7737 Filed 3–24–98; 8:45 am]

BILLING CODE 4310–MR–M

DEPARTMENT OF THE INTERIOR

Bureau of Reclamation

Meeting of the Conservation Advisory Group, Yakima River Basin Water Enhancement Project, Yakima, WA

AGENCY: Department of the Interior.

ACTION: Notice of meeting.

SUMMARY: As required by the Federal Advisory Committee Act, notice is hereby given that the Conservation Advisory Group, Yakima River Basin Water Enhancement Project, Yakima, Washington, established by the Secretary of the Interior, will hold a public meeting. The purpose of the Conservation Advisory Group is to provide technical advice and counsel to the Secretary and the State on the structure, implementation, and oversight of the Yakima River Basin Water Conservation Program.

DATES: Thursday, April 16, 1998, 9 a.m.–4 p.m.; Friday, April 17, 1998, 9 a.m.–12 noon.

ADDRESSES: Bureau of Reclamation Office, 1917 Marsh Road, Yakima, Washington.

FOR FURTHER INFORMATION CONTACT: James Esget, Manager, Yakima River Basin Water Enhancement Project, P.O. Box 1749, Yakima, Washington, 98907, (509) 575–5848, extension 267.

SUPPLEMENTARY INFORMATION: The purpose of the meeting will be to review the Bureau of Reclamation's water acquisition process and procedures and develop recommendations on the process to facilitate voluntary sale or lease of water. Progress Reports will be provided on the Basin Conservation Plan and the Yakima River Basin Wetlands and Floodplain Habitat Plan.

Dated: March 17, 1998.

Rick Parker,

Acting Area Manager.

[FR Doc. 98–7521 Filed 3–24–98; 8:45 am]

BILLING CODE 4310–94–M

INTERNATIONAL TRADE COMMISSION

[Investigation No. 337–TA–406]

Certain Lens-Fitted Film Packages; Notice of Investigation

AGENCY: U.S. International Trade Commission.

ACTION: Institution of investigation pursuant to 19 U.S.C. 1337.

SUMMARY: Notice is hereby given that a complaint was filed with the U.S. International Trade Commission on February 13, 1998, under section 337 of the Tariff Act of 1930, as amended, 19 U.S.C. 1337, on behalf of Fuji Photo Film Co., Ltd. of Tokyo, Japan. A supplement to the complaint was filed on March 2, 1998. A notice of withdrawal as to one proposed respondent was filed on March 6, 1998. The complaint, as supplemented, alleges violations of section 337 in the importation into the United States, the sale for importation, and the sale within the United States after importation of certain lens-fitted film packages by reason of infringement of the following claims of the following patents:

(1) claims 1, 5, 6, 9, and 11 of U.S. Letters Patent 4,833,495;

(2) claims 14 and 15 of U.S. Letters Patent 4,855,774;

(3) claims 1, 7, 8, and 15 of U.S. Letters Patent 4,884,087;

(4) claims 1, 19, and 22 of U.S. Letters Patent 4,954,857;

(5) claims 1 and 9 of U.S. Letters Patent 4,972,649;

(6) claims 14 and 16 of U.S. Letters Patent 5,063,400;

(7) claims 1 and 11 of U.S. Letters Patent 5,235,364;

(8) claim 1 of U.S. Letters Patent 5,361,111;

(9) claims 1, 15, 23, and 25 of U.S. Letters Patent 5,381,200;

(10) claims 1 and 7 of U.S. Letters Patent 5,408,288;

(11) claims 1 and 28 of U.S. Letters Patent 5,436,685;

(12) claims 1 and 13 of U.S. Letters Patent Re 34,168;

(13) the claim of U.S. Letters Patent Des. 345,750;

(14) the claim of U.S. Letters Patent Des. 356,101; and

(15) the claim of U.S. Letters Patent Des. 372,722.

The complaint further alleges that there exists an industry in the United States as required by subsection (a)(2) of section 337 for each of the above patents.

The complainant requests that the Commission institute an investigation and, after a hearing, issue a permanent general exclusion order and permanent cease and desist orders.

ADDRESSES: The complaint, except for any confidential information contained therein, is available for inspection during official business hours (8:45 a.m. to 5:15 p.m.) in the Office of the Secretary, U.S. International Trade Commission, 500 E Street, S.W., Room 112, Washington, D.C. 20436, telephone 202–205–2000. Hearing-impaired individuals are advised that information on this matter can be obtained by contacting the Commission's TDD terminal on 202–205–1810. Persons with mobility impairments who will need special assistance in gaining access to the Commission should contact the Office of the Secretary at 202–205–2000. General information concerning the Commission may also be obtained by accessing its internet server (http://www.usitc.gov).

FOR FURTHER INFORMATION CONTACT: Christine E. Lehman, Esq., Office of Unfair Import Investigations, U.S. International Trade Commission, telephone 202–205–2582.

Authority: The authority for institution of this investigation is contained in section 337 of the Tariff Act of 1930, as amended, and in section 210.10 of the Commission's Rules of Practice and Procedure, 19 CFR § 210.10 (1997).

Scope of Investigation

Having considered the complaint, the U.S. International Trade Commission, on March 18, 1998, ordered that—

(1) Pursuant to subsection (b) of section 337 of the Tariff Act of 1930, as amended, an investigation be instituted to determine whether there is a violation of subsection (a)(1)(B) of section 337 in the importation into the United States, the sale for importation, or the sale within the United States after importation of certain lens-fitted film packages by reason of infringement of the following claims of the following patents, and whether there exists an industry in the United States as required by subsection (a)(2) of section 337:

(1) claims 1, 5, 6, 9, or 11 of U.S. Letters Patent 4,833,495;

(2) claims 14 or 15 of U.S. Letters Patent 4,855,774;

(3) claims 1, 7, 8, or 15 of U.S. Letters Patent 4,884,087;

(4) claims 1, 19, or 22 of U.S. Letters Patent 4,954,857;

(5) claims 1 or 9 of U.S. Letters Patent 4,972,649;

(6) claims 14 or 16 of U.S. Letters Patent 5,063,400;

(7) claims 1 or 11 of U.S. Letters Patent 5,235,364;

(8) claim 1 of U.S. Letters Patent 5,361,111;

(9) claims 1, 15, 23, or 25 of U.S. Letters Patent 5,381,200;

(10) claims 1 or 7 of U.S. Letters Patent 5,408,288;

(11) claims 1 or 28 of U.S. Letters Patent 5,436,685;

(12) claims 1 or 13 of U.S. Letters Patent Re 34,168;

(13) the claim of U.S. Letters Patent Des. 345,750;

(14) the claim of U.S. Letters Patent Des. 356,101; or

(15) the claim of U.S. Letters Patent Des. 372,722.

(2) For the purpose of the investigation so instituted, the following are hereby named as parties upon which this notice of investigation shall be served:

(a) The complainant is: Fuji Photo Film Co., Ltd., 26–30 Nishiazabu 2-chome, Minato-ku, Tokyo 106 Japan.

(b) The respondents are the following companies alleged to be in violation of section 337, and are the parties upon which the complaint is to be served:

Achiever Industries Limited, 12/F, Union Hing Yip Factory, Building, 20 Hing Yip Street, Kwun tong, Kowloon, Hong Kong

Ad-Tek Specialties Inc., 2641 Townsgate Road, #300, Westlake Village, CA 91361

AmerImage, Inc. d/b/a Rainbow Products, 4680 SW 64th Avenue, Davie, FL 33314–4427

Argus Industries, 2121 Oxford Road, Des Plaines, IL 60018

Boecks Camera LLC, 912 N. La Cienega Boulevard, Los Angeles, CA 90069

Boshi Technology Ltd., Room 921 Star House, 3 Salisbury Road, Tsim Ha Tsui, Kowloon, Hong Kong

BPS Marketing, 18642–142nd Avenue, Woodinville, WA 98017

China Film Equipment Corp., 20 Xin De Street, Beijing, China, Zip C: 100088

Dynatec International, Inc., 3820 West Great Lakes Drive, Salt Lake City, UT 84120

E.T. Trading, Ltd. d/b/a Klikit, 825 McDonald Avenue, Brooklyn, NY 11218

Fast Shot, 7250 Harwill Drive, Suite O, Houston, TX 77036

Forcecam, Inc., 280 South Beverly Drive, Suite 201, Beverly Hills, CA 90212

Hachi International Inc., 444 Park Avenue South, 7th Floor, New York, NY 10016

Innovative Trading Co., 380 South Mentor Avenue, Suite 11, Pasadena, CA 91106

Jazz Photo Corp., 600 Blair Road, Carteret, NJ 07008

Labelle Time, Inc., 65 N.W. 166th Street, North Miami, FL 33169

Linfa Photographic Ind. Co. Ltd., Room 1018–1020, 10/Fl, ower B, New Mandarin Plaza, 14 Science Museum Road, T.S.T., East Kowloon, Hong Kong

Opticam Inc., 810 Navy Street, Santa Monica, CA 90405–5639

Opticolor Camera, 3213 West Wheeler Street, Seattle, WA 98199

Penmax, Inc., 302 West Evergreen Avenue, Monrovia, CA 91016–4503

PhilmEx Photographic Film, 912 N. La Cienega Boulevard, Los Angeles, CA 90069

P.S.I. Industries, Inc., 1160–B South Rogers Circle, Boca Raton, FL 33487

Rino Trading Co., Ltd., B101, 448–1 Sungnae-1 Dong, Kong, Pong-Ku, Seoul, Korea

Sakar International, Inc., 195 Carter Dr., Edison, NJ 08817–2068

T.D.A. Trading Corp., 31–16 Hunters Point Avenue, Long Island City, NY 11101

Vantage Sales, Inc., 600 E. Higgins Road, Elk Grove Village, IL 60007–1519

Vivitar Corp., 1280 Rancho Conejo Blvd., Newbury Park, CA 91320–1403

(c) Christine E. Lehman, Esq., Office of Unfair Import Investigations, U.S. International Trade Commission, 500 E Street, S.W., Room 401–I, Washington, D.C. 20436, who shall be the Commission investigative attorney, party to this investigation; and

(3) For the investigation so instituted, the Honorable Paul J. Luckern is designated as the presiding administrative law judge.

Responses to the complaint and the notice of investigation must be submitted by the named respondents in accordance with § 210.13 of the Commission's Rules of Practice and Procedure, 19 CFR 210.13. Pursuant to 19 CFR 201.16(d) and 210.13(a), such responses will be considered by the Commission if received no later than 20 days after the date of service by the Commission of the complaint and notice of investigation. Extensions of time for submitting responses to the complaint will not be granted unless good cause therefor is shown.

Failure of a respondent to file a timely response to each allegation in the complaint and in this notice may be deemed to constitute a waiver of the right to appear and contest the allegations of the complaint and this notice, and to authorize the administrative law judge and the Commission, without further notice to the respondent, to find the facts to be as alleged in the complaint and this notice and to enter both an initial determination and a final determination containing such findings, and may result in the issuance of a limited exclusion order or a cease and desist order or both directed against such respondent.

Issued: March 18, 1998.

By order of the Commission.

Donna R. Koehnke,

Secretary.

[FR Doc. 98–7744 Filed 3–24–98; 8:45 am]

BILLING CODE 7020–02–P

INTERNATIONAL TRADE COMMISSION

[Investigations Nos. 731–TA–763–766 (Final)]

Certain Steel, Wire Rod From Canada, Germany, Trinidad and Tobago, and Venezuela

Determinations

On the basis of the record [1] developed in the subject investigations, the United States International Trade Commission determines, pursuant to section 733(a) of the Tariff Act of 1930 (19 U.S.C. 1673b(a)) (the Act), that an industry in the United States is not materially injured or threatened with material injury, and the establishment of an industry in the United States is not materially retarded, by reason of imports from Canada, Germany, Trinidad & Tobago, and Venezuela of certain steel wire rod, provided for in subheadings 7213.91.30, 7213.91.45, 7213.91.60, 7213.99.00, 7227.20.00, and 7227.90.60 of the Harmonized Tariff Schedule of the United States, that have been found by the Department of Commerce (Commerce) to be sold in the United States at less than fair value (LTFV).[2]

Background

The Commission instituted these investigations effective February 26, 1997, following receipt of a petition filed with the Commission and Commerce by Connecticut Steel Corp., Wallingford, CT; Co-Steel Raritan, Perth Amboy, NJ; GS Industries, Inc., Georgetown, SC; Keystone Steel & Wire Co., Peoria, IL; North Star Steel Texas, Inc., Beaumont, TX; and Northwestern Steel & Wire, Sterling, IL. The final phase of the investigations was scheduled by the Commission following notification of preliminary determinations by Commerce that imports of certain steel wire rod from Canada, Germany, Trinidad & Tobago, and Venezuela were being sold at LTFV within the meaning of section 733(b) of the Act (19 U.S.C. 1673b(b)). Notice of the scheduling of the Commission's investigations was given by posting copies of the notice in the Office of the Secretary, U.S. International Trade Commission, Washington, DC, and by publishing the notice in the **Federal Register** of October 22, 1997 (62 FR 54854). A public hearing for these investigations was held concurrently

[1] The record is defined in sec. 207.2(f) of the Commission's Rules of Practice and Procedure (19 CFR 207.2(f)).

[2] Commissioner Crawford dissenting with respect to Canada, Germany, and Venezuela.

with that for the corresponding countervailing-duty investigations on October 16, 1997, in Washington, DC, and all persons who requested the opportunity were permitted to appear in person or by counsel.

On February 23, 1998, Commerce published notice in the **Federal Register** of the suspension of its antidumping investigation on steel wire rod from Venezuela (63 FR 8948) based on agreements it concluded with this country; however, at the same time Commerce indicated that it was continuing its investigation, pursuant to a request by counsel representing the Venezuelan producer. Accordingly, the Commission determined to continue its investigation.

The Commission transmitted its determinations in these investigations to the Secretary of Commerce on March 17, 1998. The views of the Commission are contained in USITC Publication 3087 (March 1998), entitled ''Certain Steel Wire Rod from Canada, Germany, Trinidad and Tobago, and Venezuela: Investigations Nos. 731–TA–763–766 (Final).''

Issued: March 18, 1998.

By order of the Commission.

Donna R. Koehnke,

Secretary.

[FR Doc. 98–7743 Filed 3–24–98; 8:45 am]

BILLING CODE 7020–02–P

INTERNATIONAL TRADE COMMISSION

[Investigation No. TA–201–67]

Wheat Gluten

Determination

On the basis of the information in the investigation, the Commission unanimously—

(1) determines, pursuant to section 202(b) of the Trade Act of 1974, that wheat gluten [1] is being imported into the United States in such increased quantities as to be a substantial cause of serious injury to the domestic industry producing an article like or directly competitive with the imported article; and

(2) makes negative findings, pursuant to section 311(a) of the North American Free-Trade Agreement (NAFTA) Implementation Act, with respect to imports of wheat gluten from Canada and Mexico.

Findings and Recommendations With Respect to Remedy

The Commission unanimously—

(1) Recommends that the President impose a quantitative restriction, for a 4-year period, on imports of wheat gluten that are the subject of this investigation, in the amount of 126 million pounds in the first year, to be increased by 6 percent each subsequent year that the action is in effect;

(2) Recommends that, within the overall quantitative restriction, the President allocate separate quantitative restrictions for the European Union, Australia, and ''all other'' non-excluded countries, taking into account the disproportional growth and impact of imports of wheat gluten from the European Union;

(3) Having made negative findings with respect to imports of wheat gluten from Canada and Mexico under section 311(a) of the NAFTA Implementation Act, recommends that such imports be excluded from the quantitative restriction;

(4) Recommends that this import relief action not apply to any imports of wheat gluten from Israel, or to any imports of wheat gluten entered duty free from beneficiary countries under the Caribbean Basin Economic Recovery Act or the Andean Trade Preference Act; and

(5) Recommends that the President undertake international negotiations to address the underlying cause of the increase in imports of wheat gluten or otherwise to alleviate the injury to the domestic industry.

The Commission finds that this remedy will address the serious injury that it has found to exist and will be the most effective in facilitating the efforts of the domestic industry to make a positive adjustment to import competition.

Background

Following receipt of a petition filed on September 19, 1997, on behalf of the Wheat Gluten Industry Council, the Commission, effective September 19, 1997, instituted investigation No. TA–201–67, Wheat Gluten, under section 202 of the Trade Act of 1974 to determine whether wheat gluten is being imported into the United States in such increased quantities as to be a substantial cause of serious injury, or the threat thereof, to the domestic industry producing an article like or directly competitive with the imported article.

Notice of the institution of the Commission's investigation and of the scheduling of public hearings to be held in connection therewith was given by posting copies of the notice in the Office of the Secretary, U.S. International Trade Commission, Washington, DC, and by publishing the notice in the **Federal Register** of October 1, 1997 (62 FR 51488). The hearing in connection with the injury phase of the investigation was held on December 16, 1997, and the hearing on the question of remedy was held on February 10, 1998. Both hearings were held in Washington, DC; all persons who requested the opportunity were permitted to appear in person or by counsel.

The Commission transmitted its determination in this investigation to the President on March 18, 1998. The views of the Commission are contained in USITC Publication 3088 (March 1998), entitled ''Wheat Gluten: Investigation No. TA–201–67.''

Issued: March 19, 1998.

By order of the Commission.

Donna R. Koehnke,

Secretary.

[FR Doc. 98–7742 Filed 3–24–98; 8:45 am]

BILLING CODE 7020–02–P

[1] The imported article covered by this investigation is wheat gluten, the natural protein portion of wheat that is extracted after wheat is milled into flour. Wheat gluten is provided for in subheadings 1109.00.10 and 1109.00.90 of the Harmonized Tariff Schedule of the United States (HTS).

DEPARTMENT OF JUSTICE

Office of Community Oriented Policing Services; FY 1998 Community Policing Discretionary Grants

AGENCY: Office of Community Oriented Policing Services, Department of Justice.

ACTION: Notice of availability.

SUMMARY: The Department of Justice, Office of Community Oriented Policing Services (''COPS'') announces the availability of grants to support the purchase of equipment and technology, and the procurement of support services under COPS Making Officer Redeployment Effective (''COPS MORE 98''). Eligible applicants under COPS MORE 98 are those state, local and other public law enforcement agencies, Indian tribal governments, other public and private entities, and multi-jurisdictional or regional consortia that employ career law enforcement officers.

DATES: COPS MORE 98 Application Kits will be available after April 13, 1998. The COPS Office will accept applications for COPS MORE 98 from April 13 through May 29, 1998. Large jurisdictions (those serving populations greater than 150,000) are strongly encouraged to apply by May 15, 1998.

ADDRESSES: COPS MORE 98 Application Kits will be mailed to all

eligible agencies or may be obtained by writing to COPS MORE 98, The Department of Justice Crime Bill Response Center, 6th Floor, 1100 Vermont Avenue, NW, DC, 20530, or by calling the Department of Justice Response Center, (202) 307–1460 or 1–800–421–6770, or the full application kit is also available on the COPS Office web site at: http://www.usdoj.gov/cops. Completed application kits should be sent to COPS MORE 98, 3rd Floor, COPS Office, 1100 Vermont Avenue, N.W., Washington, D.C. 20530.

FOR FURTHER INFORMATION CONTACT: The Department of Justice Crime Bill Response Center, (202) 307–1480 or 1–800–421–6770.

SUPPLEMENTARY INFORMATION:

Overview

The Violent Crime Control and Law Enforcement Act of 1994 (Pub. L. 103–322) authorizes the Department of Justice to make grants to increase deployment of law enforcement officers devoted to community policing on the streets and rural routes in this nation. COPS MORE 98 is designed to expand the time available for community policing by current law enforcement officers, rather than fund the hiring or rehiring of additional law enforcement officers.

COPS MORE 98 permits eligible agencies to seek funding for the purchase of equipment and technology, and the procurement of support resources (including civilian personnel). As a result of this funding, the number of officers redeployed by agencies in community policing must be equal to or greater than the number of officers that would result from grants of the same amount for hiring new officers. Application Kits will be available after April 13, 1998. Completed Applications Kits must be received by the COPS Office by May 29, 1998.

Applicants must provide a thorough explanation of how the proposed redeployment funds will actually result in the required increase in the number of officers deployed in community policing. Additionally, the applicant must specify within the COPS MORE 98 Application a plan for continuing the proposed activity following the conclusion of COPS MORE 98 funding. Technical assistance with the development of community policing plans will be provided to jurisdictions in need of such assistance. Grants will be made for up to 75 percent of the cost of the equipment, technology, or civilian salaries for one year, with the remainder to be paid by state or local funds. Waivers of the non-federal share will be considered upon a showing of severe fiscal distress. COPS redeployment funds may not be used to replace funds that eligible agencies otherwise would have devoted to equipment, technology, or civilian hiring.

COPS funding must be allocated based on a formula previously established by Congress.

An award under COPS MORE 98 will not affect the eligibility of an agency's application for a grant under any other COPS program.

The Catalog of Federal Domestic Assistance (CFDA) reference for this program is 16.710.

Dated: March 13, 1998.

Joseph E. Brann,

Director.

[FR Doc. 98–7741 Filed 3–24–98; 8:45 am]

BILLING CODE 4410–AT–M

DEPARTMENT OF JUSTICE

Notice of Lodging of Consent Order Under the Comprehensive Environmental Response, Compensation, and Liability Act

Notice is hereby given that a proposed consent order in *In the Matters of Hanlin Group, Inc., et al.,* Case Nos. 91–33872–91–33875 (SAS) (Bkcy. D. N.J.), was lodged on March 12, 1998, with the United States Bankruptcy Court for the District of New Jersey. The proposed consent order would settle a claim asserted in this Chapter 11 bankruptcy proceeding by the United States on behalf of the United States Environmental Protection Agency relating to reimbursement of post-petition administrative expenses in environmental response costs that have been or will be expended by EPA at three facilities owned and/or operated by debtors under the Comprehensive Environmental Response Compensation and Liability Act (''CERCLA''), 42 U.S.C. 9601 *et seq*. The three facilities are the Moundsville, West Virginia plant, owned by the Hanlin Chemicals West Virginia, Inc. subsidiary of the Hanlin Group, Inc., and the Linden, New Jersey and Brunswick, Georgia plants, owned by the LCP Chemicals Division of the Hanlin Group, Inc. The United States asserted a claim for approximately $50–$60 million for future costs of remediating the Moundsville facility, approximately $11–14 million for future costs of remediating the Linden facility, and approximately $4.2 million in past costs incurred with respect to response activities at the Brunswick facility.

Under the terms of the proposed consent order, (1) with respect to the Moundsville facility, where AlliedSignal, Inc. is performing removal activities and has assumed the debtors' environmental obligations under an April 1994 agreement, Allied-Signal, Inc. expressly agrees that resolution of the United States' claim against the debtors does not affect or in any way diminish the cleanup obligations that AlliedSignal, Inc. has undertaken; (2) with respect to the Linden facility, the United States will receive an allowed first-tier administrative expense claim for the $106,000 in costs that EPA has incurred with respect to that facility, a subordinated (second-tier) claim of $5.5 million that would be paid only after payment to all allowed first-tier administrative claimants, and a supersubordinated (third-tier) administrative claim of $5.5 million that would be paid only after payment to all other allowed administrative claimants; (3) with respect to the Brunswick facility, the United States will receive an allowed first-tier administrative expense claim for the $1 million, a subordinated (second-tier) claim of $500,000 that would be paid only after payment to all allowed first-tier administrative claimants, and a supersubordinated (third-tier) administrative claim of $2.7 million that would be paid only after payment to all other allowed administrative claimants. All payments to the United States under the proposed consent order will be paid to the EPA Hazardous Substance Superfund.

The Department of Justice will receive, for a period of thirty (30) days from the date of this publication, comments relating to the proposed consent order. Comments should be addressed to the Assistant Attorney General of the Environment and Natural Resources Division, Department of Justice, Washington, D.C. 20530, and should refer to *In the Matters of Hanlin Group, Inc., et al.,* DOJ Ref. No. 90–7–1–593A.

The proposed consent order may be examined at the office of the United States Attorney for the District of New Jersey, 402 East State Street., Rm. 502, Trenton, NJ 08608; the Region II, III, and IV Offices of the Environmental Protection Agency, located at 290 Broadway, New York, NY 10007–1866 (Region II), 841 Chestnut Building, Philadelphia, PA 19107 (Region III), 100 Alabama Street, S.W., Atlanta, GA 30303–3104 (Region IV). and at the Consent Decree Library, 1120 G Street, N.W., 4th Floor, Washington, D.C. 20005, (202) 624–0892. A copy of the proposed consent order may be obtained in person or by mail from the Consent Decree Library, 1120 G Street, N.W., 4th

Floor, Washington, D.C. 20005. In requesting a copy, please refer to the referenced case and enclose a check in the amount of $3.25 (25 cents per page reproduction costs) payable to the Consent Decree Library.

Joel Gross,

Chief, Environmental Enforcement Section, Environment and Natural Resources Division.

[FR Doc. 98–7673 Filed 3–24–98; 8:45 am]

BILLING CODE 4410–15–M

DEPARTMENT OF JUSTICE

Notice of Lodging of Consent Decree Under the Comprehensive Environmental Response, Compensation, and Liability Act

Pursuant to Section 122(d) of CERCLA, 42 U.S.C. § 9622(d), notice is hereby given that a proposed Consent Decree in *United States* v. *NL Industries, et al.*, No. CV 98–322–HA, was lodged on March 10, 1998, with the United States District Court for the District of Oregon.

In this action the United States sought injunctive relief and recovery of response costs incurred and to be incurred by the United States at the Gould Superfund Site located near Portland, Oregon (the ''Site''). Under the proposed Consent Decree, the nine settling parties commit to implement the remedial actions selected in the amended Record of Decision, at a cost estimated by EPA to be approximately $15 million. They also agree to reimburse the United States for future response costs at the Site in excess of $100,000. In addition, the Settling Defendants will covenant not to sue the United States for claims against the Superfund, claims for contribution, and claims based on EPA's selection of response actions.

The Department of Justice will receive, for a period of thirty (30) days from the date of this publication, comments relating to the proposed Consent Decree. Comments should be addressed to the Assistant Attorney General for the Environment and Natural Resources Division, Department of Justice, Washington, DC 20530, and should refer to *United States* v. *NL Industries, et al.*, DOJ Ref. #90–11–3–397C.

The proposed Consent Decree may be examined at the office of the United States Attorney, 1000 SW Third Avenue, Suite 600, Portland, Oregon 97204; the Region X office of the Environmental Protection Agency, 1200 Sixth Avenue, Seattle, Washington, 98101; and at the Consent Decree Library, 1120 G Street, NW., 4th Floor, Washington, DC 20005, (202) 624–0892. A copy of the proposed Consent Decree may be obtained in person or by mail from the Consent Decree Library, 1120 G Street, NW., 4th Floor, Washington, DC 20005. In requesting a copy refer to the referenced case and enclose a check in the amount of $45.50 (25 cents per page reproduction costs), payable to the Consent Decree Library.

Joel M. Gross,

Chief, Environmental Enforcement Section.

[FR Doc. 98–7739 Filed 3–24–98; 8:45 am]

BILLING CODE 4410–15–M

DEPARTMENT OF JUSTICE

Notice of Lodging of Consent Decree Under Comprehensive Environmental Response, Compensation and Liability Act

In accordance with Departmental policy, 28 CFR 50.7, notice is hereby given that a proposed consent decree in *United States* v. *North Landing Line Construction Company, et al.*, C.A. No. 2:96CV1073, was lodged on February 17, 1998, with the United States District Court for the Eastern District of Virginia. The consent decree resolves the United States' claims with respect to past costs, pursuant to Section 107 of the Comprehensive Environmental Response, Compensation and Liability Act, 42 U.S.C. 9607, in connection with the cleanup of the Sutton Enterprises Superfund Site, located in Chesapeake, Virginia. The decree also resolves counterclaims alleged against the United States by several defendants. The defendants named in this action are Newport News Shipbuilding and Dry Dock Company, Money Point Diamond Corporation, Future First Associates, William L. Hester, and Jonathan T. Harris. Under the consent decree, the defendants and several federal agencies, including the United States Department of Defense, Department of the Navy, and the Defense Logistics Agency/Defense Reutilization and Marketing Service, against whom counterclaims were filed, will reimburse the Superfund $1,725,000 with respect to the clean-up of the Site.

The Department of Justice will receive, for a period of thirty (30) days from the date of this publication, comments relating to the proposed consent decree. Comments should be addressed to the Assistant Attorney General for the Environment and Natural Resources Division, Department of Justice, Washington, D.C. 20530, and should refer to *United States* v. *North Landing Line Construction Company, et al.*, DOJ Reference No. 90–11–3–1699.

The proposed consent decree may be examined at the office of the United States Attorney, Suite 8000, 101 W. Main Street, Norfolk, Virginia 23510; the Region III Office of the Environmental Protection Agency, 840 Chestnut Building, Philadelphia, Pennsylvania 19107; and the Consent Decree Library, 1120 G Street, N.W., 4th Floor, Washington, D.C. 20005, (202) 624–0892. A copy of the proposed decree may be obtained in person or by mail from the Consent Decree Library, 1120 G Street, N.W., 4th Floor, Washington, D.C. 20005. In requesting a copy, please refer to the referenced case and enclose a check in the amount of $8.25 (.25 cents per page production costs), payable to the Consent Decree Library.

Joel M. Gross,

Chief, Environmental Enforcement Section, Environment and Natural Resources Division.

[FR Doc. 98–7740 Filed 3–24–98; 8:45 am]

BILLING CODE 4410–15–M

MEDICARE PAYMENT ADVISORY COMMISSION

Commission Meeting

AGENCY: Medicare Payment Advisory Commission.

ACTION: Notice of meeting.

SUMMARY: The Commission will hold its next public meeting on Thursday, April 9, 1998 and Friday, April 10, 1998 at the Embassy Suites Hotel, 1250 22nd Street NW, Washington, DC in the Consulate/Ambassador Room. The meetings are tentatively scheduled to begin at 9 a.m. on April 9 and at 9 a.m. on April 10.

At the meeting, the Commission will be reviewing a draft of its June 1998 report to the Congress. Among the topics the Commission will discuss are: Variations in Medicare Payment Policies Across Ambulatory Care Sites, Relationship Between Hospitalization and Post-Acute Care, Home Health Costs and Utilization, Medicare+Choice: Standards, Enrollment, and Beneficiary Information, Dual Eligibles, Vulnerable Populations, Financial Liability, Access to Care, Quality of Care, Federal Premium Contribution, Modifying the Fee-for-Service Benefit, and Trends.

Final agendas will be mailed on April 3, 1998 and will be available on the Commission's web sites (WWW.MedPAC.GOV) at that time.

ADDRESSES: 1730 K Street, N.W.; Suite 800; Washington, D.C. 20006. The telephone number is 202/653–7220.

FOR FURTHER INFORMATION CONTACT: Ann Johnson, Executive Assistant, at 202/653–7220.

SUPPLEMENTARY INFORMATION: If you are not on the Commission mailing list and wish to receive an agenda, please call 202/653–7220 after April 3, 1998.

Murray N. Ross,

Executive Director.

[FR Doc. 98–7727 Filed 3–24–98; 8:45 am]

BILLING CODE 6820–BW–M

NATIONAL LABOR RELATIONS BOARD

Sunshine Act Meeting

AGENCY HOLDING THE MEETING: National Labor Relations Board.

TIME AND DATE: 2:00 p.m., Wednesday, January 28, 1998.

PLACE: Board Conference Room, Eleventh Floor, 1099 Fourteenth St., N.W., Washington, D.C. 20570.

STATUS: Closed to public observation pursuant to 5 U.S.C. Section 552b(c)(2) (internal personnel rules and practices); and (c)(6) (personal information where disclosure would constitute a clearly unwarranted invasion of personal privacy).

MATTERS TO BE CONSIDERED: Personnel matters.

CONTACT PERSON FOR MORE INFORMATION: John J. Toner, Executive Secretary, Washington, D.C. 20570, Telephone: (202) 273–1940.

Dated: Washington, D.C., March 16, 1998.

By direction of the Board.

John J. Toner,

Executive Secretary, National Labor Relations Board..

[FR Doc. 98–7958 Filed 3–23–98; 12:47 pm]

BILLING CODE 7545–01–M

NUCLEAR REGULATORY COMMISSION

Agency Information Collection Activities: Proposed Collection; Comment Request

AGENCY: U.S. Nuclear Regulatory Commission (NRC).

ACTION: Notice of pending NRC action to submit an information collection request to OMB and solicitation of public comment.

SUMMARY: The NRC is preparing a submittal to OMB for review of continued approval of information collections under the provisions of the Paperwork Reduction Act of 1995 (44 U.S.C. Chapter 35).

Information pertaining to the requirement to be submitted:

1. The title of the information collection: 10 CFR Part 11—Criteria and Procedures for Determining Eligibility for Access to or Control Over Special Nuclear Material.

2. Current OMB approval number: 3150–0062.

3. How often the collection is required: New applications, certifications, and amendments may be submitted at any time. Applications for renewal are submitted every 5 years.

4. Who is required or asked to report: Employees (including applicants for employment), contractors and consultants of NRC licensees and contractors whose activities involve access to or control over special nuclear material at either fixed sites or in transportation activities.

5. The number of annual responses: The majority of responses required under Part 11 are submitted using Standard Form 86, Personnel Security Packet, OMB Clearance No. 3206–0007, and NRC Form 237, Request for Access Authorization, OMB Clearance No. 3150–0050. The response and burden information for those forms is reported separately under those clearances. The remaining number of responses under Part 11 is estimated to be 5.

6. The number of hours needed annually to complete the requirement or request: Approximately 0.25 hours annually per response, for an industry total of 1.25 hours annually.

7. Abstract: NRC regulations in 10 CFR part 11 establish requirements for access to special nuclear material, and the criteria and procedures for resolving questions concerning the eligibility of individuals to receive special nuclear material access authorization. Personal history information which is submitted on applicants for relevant jobs is provided to OPM, which conducts investigations. NRC reviews the results of these investigations and makes determinations of the eligibility of the applicants for access authorization.

Submit, by May 26, 1998, comments that address the following questions:

1. Is the proposed collection of information necessary for the NRC to properly perform its functions? Does the information have practical utility?

2. Is the burden estimate accurate?

3. Is there a way to enhance the quality, utility, and clarity of the information to be collected?

4. How can the burden of the information collection be minimized, including the use of automated collection techniques or other forms of information technology?

A copy of the draft supporting statement may be viewed free of charge at the NRC Public Document Room, 2120 L Street, NW (lower level), Washington, DC. OMB clearance requests are available at the NRC worldwide web site (http://www.nrc.gov) under the FedWorld collection link on the home page tool bar. The document will be available on the NRC home page site for 60 days after the signature date of this notice.

Comments and questions about the information collection requirements may be directed to the NRC Clearance Officer, Brenda Jo. Shelton, U.S. Nuclear Regulatory Commission, T–6 F33, Washington, DC 20555–0001, or by telephone at 301–415–7233, or by Internet electronic mail at BJS1@NRC.GOV.

Dated at Rockville, Maryland, this 18th day of March 1998.

For the Nuclear Regulatory Commission.

Brenda Jo. Shelton,

NRC Clearance Officer, Office of the Chief Information Officer.

[FR Doc. 98–7810 Filed 3–24–98; 8:45 am]

BILLING CODE 7590–01–P

NUCLEAR REGULATORY COMMISSION

DOCKET NOS. STN 50–528, STN 50–529, AND STN 50–530

Arizona Public Service Company; Palo Verde Nuclear Generating Station, Unit Nos. 1, 2, And 3 Environmental Assessment and Finding of No Significant Impact

The U.S. Nuclear Regulatory Commission (the Commission) is considering the issuance of amendments to Facility Operating License Nos. NPF–41, NPF–51, and NPF–74, issued to Arizona Public Service Company (the licensee), for operation of the Palo Verde Nuclear Generating Station, Unit Nos. 1, 2, and 3, (PVNGS), located in Maricopa County, Arizona.

Environmental Assessment

Identification of the Proposed Action

The proposed amendments will revise the existing, or current Technical Specifications (CTS) in their entirety for PVNGS and incorporate the guidance provided in NUREG–1432, ''Standard Technical Specifications, Combustion Engineering Plants,'' Revision 1, dated April 1995. The licensee proposed this action in an amendment request dated October 4, 1996, as supplemented by (1) the following 19 letters submitted in 1997 and dated January 31, March 16, May 30 (2 letters), June 6, July 18 (5 letters), August 31, September 18 (2 letters), September 19 (2 letters), November 7, November 14, November 26, and December 16; and (2) the letter dated February 12, 1998.

The Need for the Proposed Action

It has been recognized that nuclear safety in all nuclear power plants would benefit from an improvement and standardization of the plant Technical Specifications (TS). The ''NRC Interim Policy Statement on Technical Specification Improvements for Nuclear Power Plants,'' (52 FR 3788) contained proposed criteria for defining the scope of TS. Later, the Commission's ''Final Policy Statement on Technical Specifications Improvements for Nuclear Power Reactors,'' published on July 22, 1993 (58 FR 39132), incorporated lessons learned since publication of the interim policy statement and formed the basis for revisions to 10 CFR 50.36. The ''Final Rule'' (60 FR 36953) codified criteria for determining the content of TS. To facilitate the development of standard TS for nuclear power reactors, each power reactor vendor owners' group (OG) and the NRC staff developed standard TS. For PVNGS, the Standard Technical Specifications (STS) are in NUREG–1432. This document formed the basis for the PVNGS Improved Technical Specifications (ITS) conversion. The NRC Committee to Review Generic Requirements (CRGR) reviewed the STS, made note of its safety merits, and indicated its support of the conversion by operating plants to the STS.

Description of the Proposed Change

The proposed revision to the CTS is based on NUREG–1432 and on guidance provided by the Commission in its Final Policy Statement. Its objective is to completely rewrite, reformat, and streamline the CTS. Emphasis is placed on human factors principles to improve clarity and understanding of the TS. The Bases section of the TS has been significantly expanded to clarify and better explain the purpose and foundation of each specification. In addition to NUREG–1432, portions of the CTS were also used as the basis for the development of the PVNGS ITS. Plant-specific issues (e.g., unique design features, requirements, and operating practices) were discussed with the licensee, and generic matters with Combustion Engineering and other OGs.

The proposed changes from the CTS can be grouped into four general categories. These categories are characterized as relocated requirements, administrative changes, less restrictive changes involving deletion of requirements, and more restrictive changes, and are as follows:

1. Relocated requirements are items which are in the CTS but do not meet the criteria set forth in the Final Policy Statement. The Final Policy Statement establishes a specific set of objective criteria for determining which regulatory requirements and operating restrictions should be included in the TS. Relocation of requirements to documents with an established control program, controlled by the regulations or the TS, allows the TS to be reserved only for those conditions or limitations upon reactor operation which are necessary to obviate the possibility of an abnormal situation or event giving rise to an immediate threat to the public health and safety, thereby focusing the scope of the TS. In general, the proposed relocation of items from the CTS to the Updated Final Safety Analysis Report (UFSAR), appropriate plant-specific programs, plant procedures, or ITS Bases follows the guidance of NUREG–1432. Once these items have been relocated to other licensee-controlled documents, the licensee may revise them under the provisions of 10 CFR 50.59 or other NRC-approved control mechanisms, which provide appropriate procedural means to control changes by the licensee.

2. Administrative changes involve the reformatting and rewording of requirements, consistent with the style of the STS in NUREG–1432, to make the TS more readily understandable to plant operators and other users. These changes are purely editorial in nature, or involve the movement or reformatting of requirements without affecting the technical content. Application of a standardized format and style will also help ensure consistency is achieved among specifications in the TS. During this reformatting and rewording process, no technical changes (either actual or interpretational) to the TS will be made unless they are identified and justified.

3. Less restrictive changes and the deletion of requirements involve portions of the CTS which (1) provide information that is descriptive in nature regarding the equipment, systems, actions, or surveillances, (2) provide little or no safety benefit, and (3) place an unnecessary burden on the licensee. This information is proposed to be deleted from the CTS and, in some instances, moved to the proposed Bases, UFSAR, or procedures. The removal of descriptive information to the Bases of the TS, UFSAR, or procedures is permissible because these documents will be controlled through a process that utilizes 10 CFR 50.59 and other NRC-approved control mechanisms. The relaxations of requirements were the result of generic NRC actions or other analyses. They will be justified on a case-by-case basis for PVNGS and described in the safety evaluation to be issued with the license amendments.

4. More restrictive requirements are proposed to be implemented in some areas to impose more stringent requirements than are in the CTS. These more restrictive requirements are being imposed to be consistent with the STS. Such changes have been made after ensuring the previously evaluated safety analysis for PVNGS was not affected. Also, other more restrictive technical changes have been made to achieve consistency, correct discrepancies, and remove ambiguities from the TS. Examples of more restrictive requirements include: placing a Limiting Condition for Operation (LCO) on plant equipment which is not required by the CTS to be operable; more restrictive requirements to restore inoperable equipment; and more restrictive surveillance requirements.

There are seven other proposed changes to the CTS that will be included in the proposed amendments to convert the CTS to the ITS for PVNGS. These other changes have, or will be, the subject of **Federal Register** Notices of Consideration of Issuance of Amendment. These proposed changes are changes to the CTS or deviations to the ISTS and are the following:

1. LCO 3.6.1.5, containment air temperature, the maximum air temperature would be decreased from ≤ 120 °F to ≤ 117 °F, to incorporate instrument uncertainties.

2. LCO 3.6.2.1, containment spray system (CSS) applicability, the LCO would be revised to eliminate the need to enter an emergency shutdown action requirement during a routine shutdown when the CSS is intentionally made inoperable.

3. Surveillance Requirement (SR) 4.6.2.1.c, containment spray header piping water level, the minimum water level would be reduced from 115 feet to 113 feet to include instrument uncertainty.

4. SR 4.6.4.3.d.1, allowable pressure drop across the hydrogen purge filtration unit, the allowable pressure drop across the hydrogen purge exhaust air filtration unit for the hydrogen purge cleanup system would be reduced from 8.4 inches of water gauge to 2.26 inches of water gauge as a result of a revised analysis.

5. SR 4.3.2.1, frequency of testing the engineered safety feature actuation system (ESFAS) subgroup relays, would be extended from 62 days to 9 months on a staggered test basis in accordance with an NRC-approved topical report.

6. Applicability Note for LCO 3.5.1, safety injection tank minimum nitrogen

pressure, would increase the minimum required nitrogen cover pressure for the safety injection tanks (SITs) from 254 psig to 260 psig to include instrument uncertainties.

7. Action 3.1.5.d, misalignment distance for movable control assemblies, the criterion to enter the Action statement for the LCO for misalignment of control assemblies would be reduced from 19 inches to 9.9 inches based on a revised analysis.

These seven changes result in more restrictive conditions on safe plant operation, are based on new safety analyses for PVNGS, prevent unnecessary shutdowns when equipment is intentionally made inoperable, or do not affect existing safety analyses for PVNGS.

Environmental Impacts of the Proposed Action

The Commission has completed its evaluation of the proposed revision to the CTS for PVNGS. Changes which are administrative in nature have been found to have no effect on the technical content of the TS. The increased clarity and understanding these changes bring to the TS are expected to improve the operators control of PVNGS in normal and accident conditions.

Relocation of requirements from the CTS to other licensee-controlled documents does not change the requirements themselves. Future changes to these requirements may then be made by the licensee under 10 CFR 50.59 and other NRC-approved control mechanisms which will ensure continued maintenance of adequate requirements. All such relocations have been found consistent with the guidelines of NUREG–1432 and the Commission's Final Policy Statement.

Changes involving more restrictive requirements have been found to enhance plant safety.

Changes involving less restrictive requirements have been reviewed individually. When requirements have been shown to provide little or no safety benefit, or to place an unnecessary burden on the licensee, their removal from the TS was justified. In most cases, relaxations previously granted to individual plants on a plant-specific basis were the result of a generic action, or of agreements reached during discussions with the OG and found to be acceptable for the plant. Generic relaxations contained in NUREG–1432 have been reviewed by the NRC staff and found to be acceptable.

In summary, the proposed revisions to the TS were found to provide control of plant operations such that reasonable assurance will be provided that the health and safety of the public will be adequately protected.

These TS changes will not increase the probability or consequences of accidents, no changes are being made to the types of any effluent that may be released offsite, and there is no significant increase in the allowable individual or cumulative occupational exposure. Also, these changes do not affect the effect the design or operation of the plant, do not involve any modifications to the plant or any increase in the licensed power for the plant, and will not create any new or unreviewed environmental impacts that were not considered in the Final Environmental Statement (FES) related to the operation of PVNGS dated February 1982. Therefore, the Commission concludes that there are no significant radiological impacts associated with the proposed TS amendments.

With regard to potential non-radiological impacts, the proposed amendments involve features located entirely within the restricted area defined in 10 CFR Part 20. They do not affect non-radiological plant effluents and have no other environmental impact. Therefore, the Commission concludes that there are no significant non-radiological impacts associated with the proposed TS amendments.

Alternatives to the Proposed Action

Since the Commission has concluded there is no measurable environmental impact associated with the proposed amendments, any alternatives with equal or greater environmental impact need not be evaluated. The principal alternative to the proposed amendments would be to deny the amendments. Denial of the licensee's application would not reduce the environmental impacts of PVNGS operations. The environmental impacts of the proposed action and the alternative action are similar.

Alternative Use of Resources

This action does not involve the use of any resources not previously considered in the FES for PVNGS dated February 1982.

Agencies and Persons Consulted

In accordance with its stated policy, on February 9, 1998, the staff consulted with the Arizona State official, Mr. William Wright of the Arizona Radiation Regulatory Agency, regarding the environmental impact of the proposed action. The State official had no comments.

Finding of No Significant Impact

Based upon the environmental assessment, the Commission concludes that the proposed action will not have a significant effect on the quality of the human environment. Accordingly, the Commission has determined not to prepare an environmental impact statement for the proposed action.

For further details with respect to the proposed action, see the licensee's application dated October 4, 1996, as supplemented by (1) 19 letters submitted in 1997 dated January 31, March 16, May 30 (2 letters), June 6, July 18 (5 letters), August 31, September 18 (2 letters), September 19 (2 letters), November 7, November 14, November 26, and December 16, and (2) the letter dated February 12, 1998, which are available for public inspection at the Commission's Public Document Room, The Gelman Building, 2120 L Street, NW., Washington, DC, and at the local public document room located at the Phoenix Public Library, 1221 N. Central Avenue, Phoenix, Arizona 85004.

Dated at Rockville, Maryland, this 19th day of March 1998.

For the Nuclear Regulatory Commission.

Jack N. Donohew,

Senior Project Manager, Project Directorate IV–1, Division of Reactor Projects—III/IV, Office of Nuclear Reactor Regulation.

[FR Doc. 98–7809 Filed 3–24–98; 8:45 am]

BILLING CODE 7590–01–P

NUCLEAR REGULATORY COMMISSION

[Docket Nos. 50–327 and 50–328]

Tennessee Valley Authority Sequoyah Nuclear Plant, Unit Nos. 1 and 2 Environmental Assessment and Finding of No Significant Impact

The U.S. Nuclear Regulatory Commission (the Commission) is considering issuance of an exemption from certain requirements of its regulations for Facility Operating License Nos. DPR–77 and DPR–79, issued to The Tennessee Valley Authority (the licensee), for operation of the Sequoyah Nuclear Plant, Unit Nos. 1 and 2, located in Hamilton County, Tennessee.

Environmental Assessment

Identification of Proposed Action

The proposed action would exempt the licensee from the requirements of 10 CFR 70.24, which requires in each area in which special nuclear material (SNM) is handled, used, or stored, a monitoring system that will energize clear audible alarms if accidental criticality occurs.

The proposed action would also exempt the licensee from the requirements to maintain emergency procedures for each area in which this licensed SNM is handled, used, or stored to ensure that all personnel withdraw to an area of safety upon the sounding of the alarm, to familiarize personnel with the evacuation plan, and to designate responsible individuals for determining the cause of the alarm, and to place radiation survey instruments in accessible locations for use in such an emergency.

The proposed action is in accordance with the licensee's application for exemption dated December 5, 1997.

The Need for the Proposed Action

The purpose of 10 CFR 70.24 is to ensure that if a criticality were to occur during the handling of SNM, personnel would be alerted to that fact and would take appropriate action. At a commercial nuclear power plant, the inadvertent criticality with which 10 CFR 70.24 is concerned could occur during fuel handling operations. The SNM that could be assembled into a critical mass at a commercial nuclear power plant is in the form of nuclear fuel; the quantity of other forms of SNM that is stored on site is small enough to preclude achieving a critical mass. Because the fuel is not enriched beyond 5.0 weight percent Uranium-235 and because commercial nuclear plant licensees have procedures and features designed to prevent inadvertent criticality, the staff has determined that it is unlikely that an inadvertent criticality could occur due to the handling of SNM at a commercial power reactor. The requirements of 10 CFR 70.24, therefore, are not necessary to ensure the safety of personnel during the handling of SNM at commercial power reactors.

Environmental Impacts of the Proposed Action

The Commission has completed its evaluation of the proposed action and concludes that there is no significant environmental impact if the exemption is granted. Inadvertent or accidental criticality will be precluded through compliance with the Sequoyah Nuclear Plant, Units 1 and 2 Technical Specifications (TS), the design of the fuel storage racks providing geometric spacing of fuel assemblies in their storage locations, and administrative controls imposed on fuel handling procedures. TS requirements specify reactivity limits for the fuel storage racks and minimum spacing between the fuel assemblies in the storage racks.

Appendix A of 10 CFR Part 50, ''General Design Criteria for Nuclear Power Plants,'' Criterion 62, requires that criticality in the fuel storage and handling system shall be prevented by physical systems or processes, preferably by use of geometrically-safe configurations. This is met at Sequoyah Nuclear Plant, Units 1 and 2, as identified in the TS and the Updated Final Safety Analysis Report (UFSAR). Sequoyah TS Section 5.6.1.2 states that the new fuel storage racks are designed for dry storage of unirradiated fuel assemblies having a U–235 enrichment less than or equal to 5.0 weight percent, while maintaining a k-effective of less than or equal to 0.98 under the most reactive condition. UFSAR Section 9.1.1, New Fuel Storage, for both Units 1 and 2 specify that the fuel racks are designed to provide sufficient spacing between fuel assemblies to maintain a subcritical (k-effective less than or equal to 0.98) array assuming the most reactive condition, and under all design loadings including the safe shutdown earthquake. The UFSAR also specifies that the new fuel racks are designed to preclude the insertion of a new fuel assembly between cavities.

The proposed exemption would not result in any significant radiological impacts. The proposed exemption would not affect radiological plant effluent nor cause any significant occupational exposures since the TS design controls (including geometric spacing of fuel assembly storage spaces) and administrative controls preclude inadvertent criticality. The amount of radioactive waste would not be changed by the proposed exemption.

The proposed exemption does not result in any significant nonradiological environmental impacts. The proposed exemption involves features located entirely within the restricted area as defined in 10 CFR Part 20. It does not affect non-radiological plant effluents and has no other environmental impact. Accordingly, the Commission concludes that there are no significant non-radiological environmental impacts associated with the proposed action.

Alternatives to the Proposed Action

Since the Commission has concluded that there is no measurable environmental impact associated with the proposed action, any alternatives with equal or greater environmental impact need not be evaluated. As an alternative to the proposed exemption, the staff considered denial of the requested exemption. Denial of the request would result in no change in current environmental impacts. The environmental impacts of the proposed action and the alternative action are similar.

Alternative Use of Resources

This action does not involve the use of any resources not previously considered in the ''Final Environmental Statement Related to the Sequoyah Nuclear Plant, Unit Nos. 1 and 2,'' dated February 13, 1974.

Agencies and Persons Consulted

In accordance with its stated policy, on January 30, 1998, the Commission staff consulted with the State of Tennessee Official (Joelle Key) regarding the environmental impact of the proposed action. The State official had no comments.

Finding of No Significant Impact

Based upon the environmental assessment, the Commission concludes that the proposed action will not have a significant effect on the quality of the human environment. Accordingly, the Commission has determined not to prepare an environmental impact statement for the proposed action.

For further details with respect to the proposed action, see the licensee's letter dated December 5, 1997, which is available for public inspection at the Commission's Public Document Room, which is located at The Gelman Building, 2120 L Street, NW., Washington, D.C., and at the local public document room located at the Chattanooga-Hamilton County Library, 1001 Broad Street, Chattanooga, Tennessee.

Dated at Rockville, Maryland, this 17th day of March 1997.

For the Nuclear Regulatory Commission.

Frederick J. Hebdon,

Director, Project Directorate II–3, Division of Reactor Projects—I/II, Office of Nuclear Reactor Regulation.

[FR Doc. 98–7812 Filed 3–24–98; 8:45 am]

BILLING CODE 7590–01–P

NUCLEAR REGULATORY COMMISSION

Biweekly Notice; Applications and Amendments to Facility Operating Licenses Involving No Significant Hazards Considerations

I. Background

Pursuant to Public Law 97–415, the U.S. Nuclear Regulatory Commission (the Commission or NRC staff) is publishing this regular biweekly notice. Public Law 97–415 revised section 189 of the Atomic Energy Act of 1954, as amended (the Act), to require the Commission to publish notice of any

amendments issued, or proposed to be issued, under a new provision of section 189 of the Act. This provision grants the Commission the authority to issue and make immediately effective any amendment to an operating license upon a determination by the Commission that such amendment involves no significant hazards consideration, notwithstanding the pendency before the Commission of a request for a hearing from any person.

This biweekly notice includes all notices of amendments issued, or proposed to be issued from March 2, 1998, through March 13, 1998. The last biweekly notice was published on March 11, 1998 (63 FR 11913).

Notice of Consideration of Issuance of Amendments to Facility Operating Licenses, Proposed No Significant Hazards Consideration Determination, and Opportunity for a Hearing

The Commission has made a proposed determination that the following amendment requests involve no significant hazards consideration. Under the Commission's regulations in 10 CFR 50.92, this means that operation of the facility in accordance with the proposed amendment would not (1) involve a significant increase in the probability or consequences of an accident previously evaluated; or (2) create the possibility of a new or different kind of accident from any accident previously evaluated; or (3) involve a significant reduction in a margin of safety. The basis for this proposed determination for each amendment request is shown below.

The Commission is seeking public comments on this proposed determination. Any comments received within 30 days after the date of publication of this notice will be considered in making any final determination.

Normally, the Commission will not issue the amendment until the expiration of the 30-day notice period. However, should circumstances change during the notice period such that failure to act in a timely way would result, for example, in derating or shutdown of the facility, the Commission may issue the license amendment before the expiration of the 30-day notice period, provided that its final determination is that the amendment involves no significant hazards consideration. The final determination will consider all public and State comments received before action is taken. Should the Commission take this action, it will publish in the **Federal Register** a notice of issuance and provide for opportunity for a hearing after issuance. The Commission expects that the need to take this action will occur very infrequently.

Written comments may be submitted by mail to the Chief, Rules and Directives Branch, Division of Administration Services, Office of Administration, U.S. Nuclear Regulatory Commission, Washington, DC 20555–0001, and should cite the publication date and page number of this **Federal Register** notice. Written comments may also be delivered to Room 6D22, Two White Flint North, 11545 Rockville Pike, Rockville, Maryland from 7:30 a.m. to 4:15 p.m. Federal workdays. Copies of written comments received may be examined at the NRC Public Document Room, the Gelman Building, 2120 L Street, NW., Washington, DC. The filing of requests for a hearing and petitions for leave to intervene is discussed below.

By April 24, 1998, the licensee may file a request for a hearing with respect to issuance of the amendment to the subject facility operating license and any person whose interest may be affected by this proceeding and who wishes to participate as a party in the proceeding must file a written request for a hearing and a petition for leave to intervene. Requests for a hearing and a petition for leave to intervene shall be filed in accordance with the Commission's ''Rules of Practice for Domestic Licensing Proceedings'' in 10 CFR part 2. Interested persons should consult a current copy of 10 CFR 2.714 which is available at the Commission's Public Document Room, the Gelman Building, 2120 L Street, NW., Washington, DC and at the local public document room for the particular facility involved. If a request for a hearing or petition for leave to intervene is filed by the above date, the Commission or an Atomic Safety and Licensing Board, designated by the Commission or by the Chairman of the Atomic Safety and Licensing Board Panel, will rule on the request and/or petition; and the Secretary or the designated Atomic Safety and Licensing Board will issue a notice of a hearing or an appropriate order.

As required by 10 CFR 2.714, a petition for leave to intervene shall set forth with particularity the interest of the petitioner in the proceeding, and how that interest may be affected by the results of the proceeding. The petition should specifically explain the reasons why intervention should be permitted with particular reference to the following factors: (1) The nature of the petitioner's right under the Act to be made a party to the proceeding; (2) the nature and extent of the petitioner's property, financial, or other interest in the proceeding; and (3) the possible effect of any order which may be entered in the proceeding on the petitioner's interest. The petition should also identify the specific aspect(s) of the subject matter of the proceeding as to which petitioner wishes to intervene. Any person who has filed a petition for leave to intervene or who has been admitted as a party may amend the petition without requesting leave of the Board up to 15 days prior to the first prehearing conference scheduled in the proceeding, but such an amended petition must satisfy the specificity requirements described above.

Not later than 15 days prior to the first prehearing conference scheduled in the proceeding, a petitioner shall file a supplement to the petition to intervene which must include a list of the contentions which are sought to be litigated in the matter. Each contention must consist of a specific statement of the issue of law or fact to be raised or controverted. In addition, the petitioner shall provide a brief explanation of the bases of the contention and a concise statement of the alleged facts or expert opinion which support the contention and on which the petitioner intends to rely in proving the contention at the hearing. The petitioner must also provide references to those specific sources and documents of which the petitioner is aware and on which the petitioner intends to rely to establish those facts or expert opinion. Petitioner must provide sufficient information to show that a genuine dispute exists with the applicant on a material issue of law or fact. Contentions shall be limited to matters within the scope of the amendment under consideration. The contention must be one which, if proven, would entitle the petitioner to relief. A petitioner who fails to file such a supplement which satisfies these requirements with respect to at least one contention will not be permitted to participate as a party.

Those permitted to intervene become parties to the proceeding, subject to any limitations in the order granting leave to intervene, and have the opportunity to participate fully in the conduct of the hearing, including the opportunity to present evidence and cross-examine witnesses.

If a hearing is requested, the Commission will make a final determination on the issue of no significant hazards consideration. The final determination will serve to decide when the hearing is held.

If the final determination is that the amendment request involves no significant hazards consideration, the

Commission may issue the amendment and make it immediately effective, notwithstanding the request for a hearing. Any hearing held would take place after issuance of the amendment.

If the final determination is that the amendment request involves a significant hazards consideration, any hearing held would take place before the issuance of any amendment.

A request for a hearing or a petition for leave to intervene must be filed with the Secretary of the Commission, U.S. Nuclear Regulatory Commission, Washington, DC 20555–0001, Attention: Rulemakings and Adjudications Staff, or may be delivered to the Commission's Public Document Room, the Gelman Building, 2120 L Street, NW., Washington DC, by the above date. A copy of the petition should also be sent to the Office of the General Counsel, U.S. Nuclear Regulatory Commission, Washington, DC 20555–0001, and to the attorney for the licensee.

Nontimely filings of petitions for leave to intervene, amended petitions, supplemental petitions and/or requests for a hearing will not be entertained absent a determination by the Commission, the presiding officer or the Atomic Safety and Licensing Board that the petition and/or request should be granted based upon a balancing of factors specified in 10 CFR 2.714(a)(1)(i)–(v) and 2.714(d).

For further details with respect to this action, see the application for amendment which is available for public inspection at the Commission's Public Document Room, the Gelman Building, 2120 L Street, NW., Washington, DC, and at the local public document room for the particular facility involved.

Carolina Power & Light Company, et al., Docket No. 50–325, Brunswick Steam Electric Plant, Unit 1, Brunswick County, North Carolina

Date of amendment request: February 23, 1998.

Description of amendment request: The amendment request proposes changes to the Brunswick Steam Electric Plant Unit 1 Technical Specifications (TS) in support of Cycle 12 operation, including a change to the Minimum Critical Power Ratio safety limit (safety limit MCPR) to a value equivalent to the generic safety limit MCPR for General Electric type GE–13 fuel. The request would additionally remove a footnote limiting the stated value for the safety limit MCPR to a specific fuel cycle and reference to an NRC safety evaluation documenting acceptance of methods used for determining the current cycle safety limit MCPR. The amendment request is provided both in the format of the current TS as well as improved Standard Technical Specifications (iSTS). The Brunswick licensee applied for conversion to ISTS on November 1, 1996, as supplemented on October 13, 1997, and February 26, 1998, and that application is currently undergoing NRC staff review. For iSTS, the licensee has proposed two safety limits MCPR, one pertaining to two-recirculation loop operation and the other to single-recirculation loop operation.

Basis for proposed no significant hazards consideration determination: As required by 10 CFR 50.91(a), the licensee has provided its analysis of the issue of no significant hazards consideration, which is presented below:

1. Does the change involve a significant increase in the probability or consequences of an accident previously evaluated?

The proposed license amendment establishes a revised safety limit MCPR value of 1.09 [two-recirculation loop and 1.10 for single-recirculation loop operation] for use during Unit 1 Cycle 12 operation. General Electric (GE) has determined that both generic and plant-specific evaluations [two-loop operation] yield the same calculated safety limit MCPR value. Additionally, a document referenced by the Technical Specification 6.9.3.2 of methodologies used in determining core operating limits is being removed.

The probability of an evaluated accident is derived from the probabilities of the individual precursors to that accident. The consequences of an evaluated accident are determined by the operability of plant systems designed to mitigate those consequences. Limits have been established, consistent with NRC[-] approved methods, to ensure that fuel performance during normal, transient, and accident conditions is acceptable.

The probability of an evaluated accident is not increased by revising the safety limit MCPR value to 1.09 [two-loop/1.10 single-loop]. The change does not require any physical plant modifications or physically affect any plant components. Therefore, no individual precursors of an accident are affected.

The proposed license amendment establishes a revised safety limit MCPR that ensures the fuel is protected during normal operation and during any plant transients or anticipated operational occurrences. Specifically, the reload analysis demonstrates that a safety limit MCPR value of 1.09 [two-loop/1.10 single-loop] ensures that less than 0.1 percent of the fuel rods will experience boiling transition during any plant operation if the limit is not violated.

The methods for calculating the safety limit MCPR have been approved by the NRC and are described in GE's reload licensing methodology topical report NEDE–24011, ''General Electric Standard Application for Reactor Fuel (GESTAR II).'' Based on (1) the determination of the new safety limit MCPR value using conservative approved methods, and (2) the operability of plant systems designed to mitigate the consequences of accidents not having been changed; the consequences of an accident previously evaluated have not been increased.

Additionally, removal of the footnote on the safety limit MCPR value in Technical Specification 2.1.2 and removal of reference ''c'' from the document list in Technical Specification 6.9.3.2 will not increase the probability or consequences of accidents previously evaluated. The footnote on the safety limit MCPR value in Technical Specification 2.1.2 and reference ''c'' in Technical Specification 6.9.3.2 were associated with the safety limit MCPR value of 1.10 for Unit 1 Cycle 11 operation. Since the current safety limit MCPR value of 1.10 applies only to Unit 1 Cycle 11 operation, the footnote on the safety limit MCPR value in Technical Specification 2.1.2 and the reference ''c'' in Technical Specification 6.9.3.2 are no longer needed and should be deleted. Thus, removal of the footnote on the safety limit MCPR value in Technical Specification 2.1.2 and removal of reference ''c'' from Technical Specification 6.9.3.2 is an administrative change that has no effect on the probability or consequences of accidents previously evaluated.

2. Does the change create the possibility of a new or different kind of accident from any accident previously evaluated?

This proposed license amendment involves a revision of the safety limit MCPR from 1.10 to 1.09 [two-loop/1.10 single-loop] based on the results of both cycle-specific and generic analyses, removal of the footnote on the safety limit MCPR value in Technical Specification 2.1.2, and the removal of a document reference listed in Technical Specification 6.9.3.2 describing the methods used only during Unit 1 Cycle 11 to determine core operating limits. Creation of the possibility of a new or different kind of accident would require the creation of one or more new precursors of that accident. New accident precursors may be created by modifications of the plant configuration, including changes in allowable modes of operation. This proposed license amendment does not involve any modifications of the plant configuration or changes in the allowable modes of operation. Therefore, no new precursors of an accident are created and no new or different kinds of accidents are created.

3. Does this change involve a significant reduction in a margin of safety?

As previously stated, the methods for calculating the safety limit MCPR have been previously approved by the NRC and are described in GE's reload licensing methodology topical report NEDE–24011. Use of these methods ensures that the resulting safety limit MCPR satisfies the fuel design safety criteria that less than 0.1 percent of the fuel rods experience boiling transition if the safety limit is not violated. Based on the assurance that the fuel design safety criteria will be met, the proposed license amendment does not involve a significant reduction in a margin of safety.

The NRC staff has reviewed the licensee's analysis and, based on this review, it appears that the three

standards of 10 CFR 50.92(c) are satisfied. Therefore, the NRC staff proposes to determine that the amendment request involves no significant hazards consideration.

Local Public Document Room location: University of North Carolina at Wilmington, William Madison Randall Library, 601 S. College Road, Wilmington, North Carolina 28403–3297.

Attorney for licensee: William D. Johnson, Vice President and Senior Counsel, Carolina Power & Light Company, Post Office Box 1551, Raleigh, North Carolina 27602.

NRC Project Director: Pao-Tsin Kuo (Acting).

Carolina Power & Light Company, et al., Docket No. 50–400, Shearon Harris Nuclear Power Plant, Unit 1, Wake and Chatham Counties, North Carolina

Date of amendment request: May 16, 1997.

Description of amendment request: The proposed changes would replace the existing Technical Specification (TS) 4.6.2.3 a.2 cooling water flow rate of 1425 gpm with a new value of 1300 gpm.

Basis for proposed no significant hazards consideration determination: As required by 10 CFR 50.91(a), the licensee has provided its analysis of the issue of no significant hazards consideration, which is presented below:

(1) The proposed amendment does not involve a significant increase in the probability or consequences of an accident previously evaluated.

Cooling water flow to the Containment Fan Coolers is provided by the Emergency Service Water (ESW) System, and Emergency Service Water is not an initiating system in any FSAR [Final Safety Analysis Report] Chapter 15 analyses. Revising the minimum cooling water flow to the Containment Fan Coolers will not increase the probability of initiating any previously evaluated accident, because Containment Fan Cooler performance and integrity will not be adversely affected. The heat removal capacity of the Containment Fan Coolers will be maintained consistent with the assumptions used in the existing HNP [Harris Nuclear Plant] containment analyses, and, therefore, containment integrity should not be challenged.

Therefore, there would be no increase in the probability or consequences of an accident previously evaluated.

(2) The proposed amendment does not create the possibility of a new or different kind of accident from any accident previously evaluated.

The proposed amendment will not create any new accident scenarios, because the change does not introduce any new single failures, adverse equipment or material interactions, or release paths.

Therefore, the proposed change does not create the possibility of a new or different kind of accident from any accident previously evaluated.

(3) The proposed amendment does not involve a significant reduction in the margin of safety.

Although the proposed amendment replaces the TS 4.6.2.3 a.2 cooling water flow rate of 1425 gpm with a lower flow rate of 1300 gpm, a cooling water flow rate of greater than or equal to 1300 gpm maintains adequate heat removal capacity as required by existing HNP containment analyses. The Bases for TS 4.6.2.3 a.2 is to ensure that adequate heat removal capacity is available, when the Containment Fan Coolers are operated in conjunction with the Containment Spray Systems, during post-LOCA [Loss-of-Coolant Accident] conditions to prevent the pressure inside containment from exceeding its design rating.

The NRC staff has reviewed the licensee's analysis and, based on this review, it appears that the three standards of 10 CFR 50.92(c) are satisfied. Therefore, the NRC staff proposes to determine that the amendment request involves no significant hazards consideration.

Local Public Document Room location: Cameron Village Regional Library, 1930 Clark Avenue, Raleigh, North Carolina 27605.

Attorney for licensee: William D. Johnson, Vice President and Senior Counsel, Carolina Power & Light Company, Post Office Box 1551, Raleigh, North Carolina 27602.

NRC Project Director: Pao-Tsin Kuo (Acting).

Duquesne Light Company, et al., Docket No. 50–412, Beaver Valley Power Station, Unit No. 2, Shippingport, Pennsylvania

Date of amendment request: October 22, 1997

Description of amendment request: The proposed amendment would modify the Technical Specifications (TSs) by reducing the reactor coolant system (RCS) specific activity limits in accordance with Generic Letter 95–05. The definition of DOSE EQUIVALENT I–131 would be replaced with the Improved Standard TS definition wording in the first sentence and an equation added based on dose conversion factors derived from International Commission on Radiation Protection (ICRP) ICRP–30. TS 3.4.8, Specific Activity, would be revised by reducing the DOSE EQUIVALENT I–131 limit from 1.0 [micro] Ci[curies]/gram to 0.35 [micro]Ci[curies]/gram. Item 4.a in TS Table 4.4–12, Primary Coolant Specific Activity Sample and Analysis Program, TS Figure 3.4–1, and the Bases for TS 3/4.4.8 would be modified to reflect the reduced DOSE EQUIVALENT I–131 limit.

Basis for proposed no significant hazards consideration determination: As required by 10 CFR 50.91(a), the licensee has provided its analysis of the issue of no significant hazards consideration, which is presented below:

1. Does the change involve a significant increase in the probability or consequences of an accident previously evaluated?

The proposed change reduces the reactor coolant system (RCS) specific activity limits of Specification 3.4.8 from 1.0 [micro]Ci/gram to 0.35 [micro]Ci/gram and lowers the graph in Figure 3.4–1 by 39 [micro]Ci/gram following the guidance provided in Generic Letter (GL) 95–05. This reduces the RCS acvitity allowed to leak to the secondary side when the plant is operating so that additional margin is available to support a higher allowable accident-induced leakage value as justified by analysis.

The proposed changes to Specification 3.4.8 and the definition of DOSE EQUIVALENT I–131 ensure these requirements are consistent with the latest analyses.

These changes implement the more restrictive RCS activity limits in accordance with applicable analyses and GL 95–05 to ensure the regulations are satisfied. Therefore, these changes do not involve a significant increase in the probability or consequences of an accident previously evaluated.

2. Does the change create the possibility of a new or different kind of accident from any accident previously evaluated?

The proposed change does not alter the configuration of the plant or affect the operation with the reduced specific activity limit. By reducing the specific activity limit, the limit would be reached sooner to initiate evaluation of the out of limit condition. The proposed changes will not result in any additional challenges to the main steam system or the reactor coolant system pressure boundary. Consequently, no new failure modes are introduced as a result of the proposed changes. As a result, the main steam line break, steam generator tube rupture and loss of coolant accident analyses remain bounding. Therefore, the proposed change will not create the possibility of a new or different kind of accident from any accident previously evaluated.

3. Does the change involve a significant reduction in a margin of safety?

The proposed change reduces the RCS specific activity limit to 0.35 [micro]Ci/gram along with lowering the Figure 3.4–1 limits by 39 [micro]Ci/gram. Reduction of the RCS specific activity limits allows an increase in the limit for the projected SG [steam generator] leakage following SG tube inspection and repair in accordance with the voltage-based SG tube alternate repair criteria (ARC). This follows the guidance provided in GL 95–05 and effectively takes margin available in the specific activity limits and applies it to the projected SG leakage for the ARC. This has been determined to be an acceptable means for accepting higher

projected leakage rates while still meeting the applicable limits of 10 CFR [Part] 100 and GDC [General Design Criterion] 19 with respect to offsite and control room doses.

The capability for monitoring the specific activity and complying with the required actions remains unchanged. In addition, there is no resultant change in dose consequences. Therefore, the proposed change does not involve a significant reduction in a margin of safety.

The NRC staff has reviewed the licensee's analysis and, based on this review, it appears that the three standards of 10 CFR 50.92(c) are satisfied. Therefore, the NRC staff proposes to determine that the amendment request involves no significant hazards consideration.

Local Public Document Room location: B. F. Jones Memorial Library, 663 Franklin Avenue, Aliquippa, PA 15001.

Attorney for licensee: Jay E. Silberg, Esquire, Shaw, Pittman, Potts & Trowbridge, 2300 N Street, NW., Washington, DC 20037.

NRC Project Director: John F. Stolz.

Duke Energy Corporation, et al., Docket Nos. 50–413 and 50–414, Catawba Nuclear Station, Units 1 and 2, York County, South Carolina

Date of amendment request: March 3, 1998.

Description of amendment request: The licensee proposed to revise Section 6.2.3.2 of the units' Technical Specifications. Currently, this section prescribes that the Catawba Safety Review Group (SRG) be composed of at least five individuals and at least three of these shall have a bachelor's degree in engineering or related science and at least 2 years professional level experience in his/her field, at least 1 year of which experience shall be in the nuclear field. The licensee proposed to revise this section to provide the option of replacing one of the three degreed individuals with one with at least 15 years of professional level experience in his/her field, at least 10 years of which experience shall be in the nuclear field, at least 3 years of which nuclear experience shall be supervisory/managerial experience in engineering, and shall hold or have held a Senior Reactor Operator license. The licensee also proposed to editorially revise this section.

Basis for proposed no significant hazards consideration determination: As required by 10 CFR 50.91(a), the licensee has provided its analysis of the issue of no significant hazards consideration. The NRC staff has reviewed the licensee's analysis against the standards of 10 CFR 50.92(c). The NRC staff's analysis is presented below.

1. Would the change involve a significant increase in the probability or consequences of an accident previously evaluated?

No. The proposed amendment would only change administrative requirements related to personnel qualifications for one of the five SRG [Safety Review Group] positions. The SRG is an oversight group, and the individual who meets the new qualification requirements would be expected to perform at the same level of quality as an individual who meets the current qualification requirements. Changing qualification requirements for an individual who primarily performs an oversight function will not have any direct effect on the design or operation of any plant structures, systems, or components. No previously analyzed accidents were initiated by the functions of the SRG, and the SRG was not a factor in the consequences of previously analyzed accidents. Therefore, the proposed change would have no impact on the consequences or probabilities of any previously evaluated accidents.

2. Would the change create the possibility of a new or difference kind of accident from any accident previously evaluated?

No. The proposed change would not lead to any hardware or operating procedure change. Hence, no new equipment failure modes or accidents from those previously evaluated will be created.

3. Would the change involve a significant reduction in a margin of safety?

No. Margin of safety is associated with confidence in the design and operation of the plant. The proposed change to the Technical Specifications does not involve any change to plant design or operation. Thus, the margin of safety previously analyzed and evaluated is maintained.

Based on this analysis, it appears that the three standards of 10 CFR 50.92(c) are satisfied. Therefore, the NRC staff proposes to determine that the amendment request involves no significant hazards consideration.

Local Public Document Room location: York County Library, 138 East Black Street, Rock Hill, South Carolina.

Attorney for licensee: Mr. Paul R. Newton, Legal Department (PB05E), Duke Energy Corporation, 422 South Church Street, Charlotte, North Carolina.

NRC Project Director: Herbert N. Berkow.

GPU Nuclear Corporation, et al., Docket No. 50–289, Three Mile Island Nuclear Station, Unit No. 1, Dauphin County, Pennsylvania

Date of amendment request: February 7, 1997.

Description of amendment request: The proposed amendment, if approved, would revise Technical Specification (TS) as delineated below:

1. 4160 Volt Tie From Unit 2.

TS sections 3.7.2.b & d to delete reference to the optional use of the 4160 volt tie from the unit 2 transformer.

2. Emergency Load Sequence and Power Transfer.

a. The testing required by Section 4.5.1.1.b of the TS would be considered satisfactory if the pumps have started and valves have completed travel. The need to evidence the successful starting of pumps and fans and the complete travel of valves by observation of control board component operating lights will be deleted. Neither would a second means of verification, such as: the station computer or control board indicating lights initiated by separate limit switch contacts be required.

b. Section 4.5.1.2.b would be revised in the same manner as 4.5.1.1.b above.

3. Reactor Building Cooling and Isolation System.

a. Section 4.5.3.1.a.1 of the TS would be revised to delete the need to simultaneously test start a spray pump using a Reactor Building 30-psi high pressure test signal while testing the emergency loading sequence.

The proposed change also eliminates the need to evidence the successful starting of the spray pumps by observation of the control board indicating lights or the use of the station computer for Sections 4.5.3.1.a.1 and 4.5.3.1.b.2.

4. Instrument Surveillance Requirements.

Table 4.1–1 of the TS would be revised to delete the strong motion accelerometer and its quarterly battery check surveillance requirement.

5. Air Intake Tunnel (AIT) Fire Protection Systems.

Section 5.5 of the TS would be deleted. The description of the equipment contained in Section 5.5 would be transferred to the Final Safety Analysis Report (FSAR).

6. Hydrogen Recombiner System.

The Bases for Section 4.4.4 TS would be changed to reflect a reduction in the time interval for operation of the hydrogen recombiner following a loss of cooling accident (LOCA) from 9.8 to 9 days.

7. Various editorial and typographical errors would be corrected.

Basis for proposed no significant hazards consideration determination: As required by 10 CFR 50.91(a), the licensee has provided its analysis of the issue of no significant hazards consideration which is presented below:

1. Operation of the facility in accordance with the proposed amendment would not involve a significant increase in the probability of occurrence or the consequences of an accident previously evaluated. The revised TS eliminate overly prescriptive requirements for evidencing component performance, the requirement for redundant diesel block loading tests,

instrumentation from SR [surveillance requirement] tables having no associated LCO [limiting condition for operation], AIT fire protection systems descriptive text, and correct previous typographical errors. Several of the proposed revisions involve changes which are consistent with NUREG–1430, the Revised Standard Technical Specifications (RSTS) for B&W plants. The reliability of systems and components depended upon to prevent or mitigate the consequences of accidents previously evaluated is not degraded by the proposed changes because assurance of system and equipment availability is maintained by surveillance testing program requirements.

2. Operation of the facility in accordance with the proposed amendment would not create the possibility of a new or different kind of accident from any accident previously evaluated. The revised surveillance requirements create no new failure modes. Verification of equipment operation continues to be required by plant procedures. Elimination of the AIT fire protection system descriptive text from the TSs would not create a new or different kind of accident since the change has no effect on surveillance methodology and frequency requirements. They are maintained in the Fire Protection Program.

3. Operation of the facility in accordance with the proposed amendment would not involve a significant reduction in a margin of safety because no operating limits are affected.

The NRC staff has reviewed the licensee's analysis and, based on this review, it appears that the three standards of 10 CFR 50.92(c) are satisfied. Therefore, the NRC staff proposes to determine that the amendment request involves no significant hazards consideration.

Local Public Document Room location: Law/Government Publications Section, State Library of Pennsylvania, (REGIONAL DEPOSITORY) Walnut Street and Commonwealth Avenue, Box 1601, Harrisburg, PA 17105.

Attorney for licensee: Ernest L. Blake, Jr., Esquire, Shaw, Pittman, Potts & Trowbridge, 2300 N Street, NW., Washington, DC 20037.

NRC Project Director: Cecil O. Thomas, Director.

Northeast Nuclear Energy Company, et al., Docket No. 50–423, Millstone Nuclear Power Station, Unit No. 3, New London County, Connecticut

Date of amendment request: March 3, 1998.

Description of amendment request: The proposed revision to the Millstone Unit 3 licensing basis would eliminate the requirement to have the recirculation spray system directly inject into the reactor coolant system following a design basis accident.

Basis for proposed no significant hazards consideration determination: As required by 10 CFR 50.91(a), the licensee has provided its analysis of the issue of no significant hazards consideration, which is presented below:

Northeast Nuclear Energy Company (NNECO) has reviewed the proposed revision in accordance with 10CFR50.92 and has concluded that the revision does not involve a significant hazards consideration (SHC). The basis for this conclusion is that the three criteria of 10CFR50.92(c) are not satisfied. The proposed revision does not involve an SHC because the revision would not:

1. Involve a significant increase in the probability or consequence of an accident previously evaluated.

The change to the Emergency Operating Procedures (EOP) to eliminate the use of Recirculation Spray System (RSS) direct injection during cold and hot leg recirculation does not effect the probability of any accident. The elimination of the requirement to have RSS directly [inject] into the reactor coolant system did not increase the consequences of the previously evaluated accidents. These consequences were evaluated based on very conservative assumptions concerning the containment pressure after the design basis Loss of Coolant Accident (LOCA), containment integrated leakage rates, and the fraction of the sprayed volume. None of these assumptions were affected by the elimination of the direct cold-leg injection.

Therefore, the proposed revision does not involve a significant increase in the probability or consequence of an accident previously evaluated.

2. Create the possibility of a new or different kind of accident from any accident previously evaluated.

The modification to the RSS did not create the possibility of a new or different accident from those previously analyzed. The change involved elimination of the direct injection flow path from the design basis of the system but did not involve physical modifications to the system itself. The operability of the affected valves within the direct injection alignments remained unchanged and these paths were still available to the operators for contingencies beyond the design basis. The EOPs provided clear and explicit guidance to that effect.

Therefore, the proposed revision does not create the possibility of a new or different kind of accident from any accident previously evaluated.

3. Involve a significant reduction in a margin of safety.

In considering the impact on the margin of safety as defined in the bases of the Technical Specifications, the impact of the change on the design basis analysis of the fission product barriers must be evaluated.

The minimum Emergency Core Cooling System flow requirement for long-term core cooling is that the modified alignment deliver sufficient flow to satisfy the inventory lost to the boil off in the vessel due to the decay heat and the extended boiling from hot metal in the downcomer and the lower plenum. The analysis determined that these requirements were being met.

The elimination of the direct injection resulted in a flow reduction through the RSS heat exchanger, from approximately 4000 gpm [gallons per minute] to 1200 gpm, thus reducing the rate of the heat transfer from the containment to the service water system. The design basis of the containment heat removal systems (circa 1986) is that the containment pressure will decrease to subatmospheric within one hour after the Design Basis Accident to compensate for the reduction in heat removal from the containment, a smaller allowable RSS pump degradation was assumed in the revised containment analysis. The original RSS pump performance curve was based on a 10 percent reduction in developed head from the design curve. For the modification, a 5 percent reduction was used. The results of the analysis show that with these changes the design basis of maintaining subatmospheric containment pressure was met.

Based on the above, elimination of the direct injection did not reduce the margin of safety because there was no violation of the acceptance limits and no weakening of the protective boundaries.

Therefore, the proposed revision does not involve a significant reduction in a margin of safety.

In conclusion, based on the information provided, it is determined that the proposed revision does not involve an SHC.

The NRC staff has reviewed the licensee's analysis and, based on this review, it appears that the three standards of 10 CFR 50.92(c) are satisfied. Therefore, the NRC staff proposes to determine that the amendment request involves no significant hazards consideration.

Local Public Document Room location: Learning Resources Center, Three Rivers Community-Technical College, 574 New London Turnpike, Norwich, Connecticut, and the Waterford Library, ATTN: Vince Juliano, 49 Rope Ferry Road, Waterford, Connecticut.

Attorney for licensee: Lillian M. Cuoco, Esq., Senior Nuclear Counsel, Northeast Utilities Service Company, P.O. Box 270, Hartford, Connecticut.

NRC Deputy Director: Phillip F. McKee.

Southern California Edison Company, et al., Docket Nos. 50–361 and 50–362, San Onofre Nuclear Generating Station, Unit Nos. 2 and 3, San Diego County, California

Date of amendment requests: November 2, 1995, as supplemented by letter dated January 9, 1998. The January 9, 1998, submittal supersedes the staff's proposed no significant hazards consideration determination evaluation for the requested changes that was published on April 10, 1996 (61 FR 15995).

Description of amendment requests: In the November 2, 1995, letter, the

licensee proposed to revise Technical Specification (TS) 3.8.1, ''AC Sources—Operating,'' to extend the offsite circuit completion time and to extend the allowed outage time for an emergency diesel generator. The January 9, 1998, letter modifies the original request to (1) further extend the offsite completion time and allowed outage time for an emergency diesel generator, and (2) add a new TS 5.5.2.14, ''Configuration Risk Management Program,'' that ensures a proceduralized probabilistic risk assessment-informed process is in place that assesses the overall impact of plant maintenance on plant risk.

Basis for proposed no significant hazards consideration determination: As required by 10 CFR 50.91(a), the licensee has provided its analysis of the issue of no significant hazards consideration, which is presented below:

1. The proposed change does not involve a significant increase in the probability or consequences of an accident previously evaluated.

The Emergency Diesel Generators (EDGs) are backup alternating current power sources design to power essential safety systems in the event of a loss of offsite power. EDGs are not accident initiators in any accident previously evaluated. Therefore, this change does not involve an increase in the probability of an accident previously evaluated.

The EDGs provide backup power to components that mitigate the consequences of accidents. The proposed changes to the Completion Times do not affect any of the assumptions used in the deterministic safety analysis.

To fully evaluate the effect of the EDG Completion Time extension, Probabilistic Safety Analysis (PSA) methods were utilized. The results of these analyses show no significant increase in the core damage frequency. As a result, there would be no significant increase in the consequences of accidents previously evaluated.

The Configuration Risk Management Program is an Administrative Program that assesses risk based on plant status. Adding the requirement to implement this program for Technical Specification 3.8.1 does not affect the probability or the consequences of an accident.

Therefore, this change does not involve a significant increase in the probability or consequences of any accident previously evaluated.

2. The proposed change does not create the possibility of a new or different kind of accident from any accident previously evaluated.

This proposed change does not alter the design, configuration, or method of operation of the plant. Therefore, this change does not create the possibility of a new or different kind of accident from any previously evaluated.

3. The proposed change does not involve a significant reduction in a margin of safety.

The proposed changes do not affect the Limiting Conditions for Operation or their Bases that are used in the deterministic analyses to establish the margin of safety. PSA evaluations were used to evaluate these changes and these evaluations determined that the changes are either risk neutral or risk beneficial.

Therefore, this change does not involve a significant reduction in the margin of safety.

The NRC staff has reviewed the licensee's analysis and, based on this review, it appears that the three standards of 50.92(c) are satisfied. Therefore, the NRC staff proposes to determine that the amendment requests involve no significant hazards consideration.

Local Public Document Room location: Main Library, University of California, Irvine, California 92713.

Attorney for licensee: T. E. Oubre, Esquire, Southern California Edison Company, P. O. Box 800, Rosemead, California 91770.

NRC Project Director: William H. Bateman.

Southern California Edison Company, et al., Docket Nos. 50–361 and 50–362, San Onofre Nuclear Generating Station, Unit Nos. 2 and 3, San Diego County, California

Date of amendment requests: December 19, 1997.

Description of amendment requests: The licensee proposed to revise Technical Specification (TS) 3.4.9, ''Pressurizer,'' to reduce the allowable pressurizer water volume for pressurizer operability.

Basis for proposed no significant hazards consideration determination: As required by 10 CFR 50.91(a), the licensee has provided its analysis of the issue of no significant hazards consideration, which is presented below:

1. The proposed change does not involve a significant increase in the probability or consequences of an accident previously evaluated.

The limiting events impacted by this Technical Specification change have been reanalyzed. These events are the Chemical and Volume Control System (CVCS) Malfunction and CVCS Malfunction With a Concurrent Single Failure of an Active Component, Inadvertent Operation of the Emergency Core Cooling System (ECCS) During Power Operation (Including Single Failure of an Active Component), and Feedwater System Pipe Breaks. The probability of these events is not changed by the restriction of the pressurizer level to 57%. An operator action time of 15 minutes has been identified for the CVCS malfunction and inadvertent ECCS operation events. Based on the availability of operator alarms and indications and operator Simulator training, 15 minute operator action is sufficient to recognize and mitigate the inadvertent CVCS or ECCS operation. Therefore, this change will not involve an increase in the probability or consequences of any previously evaluated accident.

2. The proposed change does not create the possibility of a new or different kind of accident from any accident previously evaluated.

This amendment request does not involve any change to plant equipment or operation. All the events identified in Chapter 15 of the Updated Final Safety Analysis Report (UFSAR) were evaluated to determine the impact of the change in pressurizer level. In addition to the normally analyzed Inadvertent Operation of the ECCS During Power Operation event a concurrent single failure of an active component was considered in this evaluation. The analysis of this event with single failure of an active component produced consequences that are bounded by the CVCS malfunction with single failure of an active component. No new or different kind of accident will be created as a result of this Technical Specification change. Therefore, this change does not create the possibility of a new or different kind of accident from any previously evaluated.

3. The proposed change does not involve a significant reduction in a margin of safety.

This amendment request does not change the manner in which safety limits, limiting safety settings, or limiting conditions for operation are determined. There are no changes to the acceptance criteria for these events as a result of the proposed reduction in the maximum pressurizer water level. This change does not reduce a margin of safety since it lowers allowed pressurizer operational level to 57%. An operator action time of 15 minutes has been identified for the CVCS malfunction and inadvertent ECCS operation events. Based on the availability of operator alarms and indications, and demonstrated operator response in Simulator training, 15 minute operator action has been demonstrated to be adequate to recognize and mitigate the inadvertent CVCS or ECCS operation. Therefore, this proposed change does not involve a reduction in a margin of safety.

The NRC staff has reviewed the licensee's analysis and, based on this review, it appears that the three standards of 50.92(c) are satisfied. Therefore, the NRC staff proposes to determine that the amendment requests involve no significant hazards consideration.

Local Public Document Room location: Main Library, University of California, Irvine, California 92713.

Attorney for licensee: T. E. Oubre, Esquire, Southern California Edison Company, P. O. Box 800, Rosemead, California 91770.

NRC Project Director: William H. Bateman.

Southern California Edison Company, et al., Docket Nos. 50–361 and 50–362, San Onofre Nuclear Generating Station, Unit Nos. 2 and 3, San Diego County, California

Date of amendment requests: January 2, 1998.

Description of amendment requests: The licensee proposed to revise Technical Specification (TS) 3.7.5, ''Auxiliary Feedwater (AFW) System,'' to indicate the turbine driven AFW pump is operable when running in the manual mode to support plant startups, shutdowns, and testing.

Basis for proposed no significant hazards consideration determination: As required by 10 CFR 50.91(a), the licensee has provided its analysis of the issue of no significant hazards consideration, which is presented below:

1. The proposed change does not involve a significant increase in the probability or consequences of an accident previously evaluated.

Probabilistic analyses have been performed in support of declaring P140 operable when the pump is manually actuated and operating.

The results show that, considering P–140 to be in test for an entire year, the core damage risk of a Main Steam Line Break/Feedwater Line Break (MSLB/FWLB) slightly increases (4.3E–8/yr) while the risk due to other initiating events decreases (3E–7/yr). The net core damage impact of P–140 in test for an entire year is a Core Damage Frequency (CDF) decrease of 2E–7/yr. Having P140 operating instead of being in standby increases its reliability. This increased reliability reduces the risk due to other initiating events, such as loss of main feedwater, medium and small Loss of Coolant Accidents (LOCAs), Steam Generator Tube Rupture (SGTR), and Loss of Offsite Power (LOP), which require Auxiliary Feedwater (AFW) and which occur with much greater frequency than MSLB/FWLB. With the overall CDF reduction a result of considering P140 being in a test configuration for an entire year, the actual cumulative risk incurred is the weighted fraction that P140 is in the test configuration over a year period. Based on past experience, the pump is running in manual approximately 500 minutes/year, which results in an annual net cumulative CDF reduction on the order of 2E–10/yr due to running P140 in the manual mode.

Therefore, the operation of the facility in accordance with this proposed change does not involve a significant increase in the probability or consequences of an accident previously evaluated.

2. The proposed change does not create the possibility of a new or different kind of accident from any accident previously evaluated.

This change does not involve a plant hardware modification or allow the operation of any plant equipment in any way other than originally designed. This change only affects the administrative tracking of the turbine-driven AFW pump when the steam driven AFW pump is operating in the manual mode.

Therefore, the operation of the facility in accordance with this proposed change will not create the possibility of a new or different kind of accident from any accident previously evaluated.

3. The proposed change does not involve a significant reduction in a margin of safety.

Pump history shows the pump is run approximately 500 minutes per year. In all cases except for the one postulated scenario of the Main Steam Isolation Signal followed by an Emergency Feedwater Actuation Signal the turbine-driven AFW pump is not susceptible to being tripped. Also, this postulated scenario does not affect the capability of the motor-driven AFW pumps.

Even though there is a small increase in the CDF from the AFW steam driven pump operating in manual mode based on the possibility of a MSLB/FWLB, also considering other initiating events results in an annual net cumulative CDF reduction on the order of 2E–10/yr due to P140 running in the manual mode.

Therefore, the operation of the facility in accordance with this proposed change does not involve a significant reduction in the margin of safety.

The NRC staff has reviewed the licensee's analysis and, based on this review, it appears that the three standards of 50.92(c) are satisfied. Therefore, the NRC staff proposes to determine that the amendment requests involve no significant hazards consideration.

Local Public Document Room location: Main Library, University of California, Irvine, California 92713.

Attorney for licensee: T. E. Oubre, Esquire, Southern California Edison Company, P. O. Box 800, Rosemead, California 91770.

NRC Project Director: William H. Bateman.

Vermont Yankee Nuclear Power Corporation, Docket No. 50–271, Vermont Yankee Nuclear

Date of amendment request: August 20, 1997, as supplemented by letters dated September 18, 1997 and October 31, 1997.

Description of amendment request: The proposed change would revise the Vermont Yankee Technical Specifications Section 6.0, ''Administrative Controls,'' to add and revise reference to NRC-approved methodologies which will be used to generate the cycle-specific thermal operating limits in the Vermont Yankee Core Operating Limits Report.

Basis for proposed no significant hazards consideration determination: As required by 10 CFR 50.91(a), the licensee has provided its analysis of the issue of no significant hazards consideration, which is presented below:

1. The proposed change will not involve any significant increase in the probability or consequences of an accident previously evaluated.

The change updates the Technical Specifications to include an NRC approved method reference to allow calculation of thermal limits with a revised method. It does not affect plant operation and will not weaken or degrade the facility.

2. The proposed change will not create the possibility of a new or different kind of accident since the change is administrative. No physical alterations of the plant, setpoint changes, or operating conditions are proposed.

3. The proposed change will not involve a significant reduction in a margin of safety. The change involves an update to the Administrative Controls in Section 6.0 of the Technical Specifications by adding a reference to NRC approved methods. This administrative change does not alter plant safety margins.

The NRC staff has reviewed the licensee's analysis and, based on this review, it appears that the three standards of 10 CFR 50.92(c) are satisfied. Therefore, the NRC staff proposes to determine that the amendment request involves no significant hazards consideration.

Local Public Document Room location: Brooks Memorial Library, 224 Main Street, Brattleboro, VT 05301.

Attorney for licensee: Mr. David R. Lewis, Shaw, Pittman, Potts & Trowbridge, 2300 N Street, N.W., Washington, DC 20037–1128.

NRC Project Director: Cecil O. Thomas, Director.

Wolf Creek Nuclear Operating Corporation, Docket No. 50–482, Wolf Creek Generating Station, Coffey County, Kansas

Date of amendment request: February 4, 1998.

Description of amendment request: The amendment would revise Technical Specification 3.2.4, quadrant power tilt ratio (QPTR), and associated Bases, to clarify the required actions for the limiting condition for operation (LCO) and other changes consistent with the technical specification conversion application submitted by letter dated May 15, 1997.

Basis for proposed no significant hazards consideration determination: As required by 10 CFR 50.91(a), the licensee has provided its analysis of the issue of no significant hazards consideration, which is presented below:

1. The proposed change does not involve a significant increase in the probability or consequences of an accident previously evaluated.

1. Requirements for Determining QPTR

The Action to calculate QPTR once per hour until THERMAL POWER was reduced to less than 50% RATED THERMAL POWER (RTP) when QPTR exceeds the LCO requirements would be deleted and replaced by a new requirement to determine QPTR at least once per 12 hours.

The proposed change involves only the compensatory measures to be taken should the QPTR be outside its limit. The frequency with which QPTR is calculated is not assumed in the initiating events for any accident previously evaluated. In addition, the change does not involve any new operating activities or hardware change. Therefore, the proposed change would not significantly increase the probability of an accident previously evaluated.

Once THERMAL POWER has been reduced appropriately in proportion to the amount that QPTR exceeds 1.00, any additional change would be sufficiently slow that a 12-hour interval for recalculating QPTR will provide an adequate level of protection. Therefore, the proposed change will not significantly increase the consequences of any accident previously evaluated.

2. Completion Time for Resetting the Power Range Neutron Flux-High Trip Setpoints

The proposed change to allow 72 hours for resetting the Power Range Neutron Flux-High trip setpoints involves only the compensatory measures to be taken should the QPTR be outside its limit. These compensatory measures are not assumed in the initiating events for any accident previously evaluated. The proposed actions recognize that the required reduction in power (3% for each 1% of indicated QPTR in excess of 1.00) provide adequate margin for fuel design limits so that consequences of assumed accidents would not be significantly affected. Therefore, the proposed change will not adversely affect the probability or consequences of any accident previously evaluated. Further, by permitting more time to perform resetting the trip setpoints, the chances of a transient may be reduced.

3. Delete(tion) of the Actions (a.3., a.4.) for verifying QPTR to be restored within 24 hours and for identifying and correcting the cause of the out-of-limit condition prior to increasing THERMAL POWER

The proposed changes would delete current Actions a.3. and a.4. and add new Actions for QPTR out of limit including requirements for measuring $F_Q(Z)$ and F^N delta H prior to and following a return to power and performing safety analyses to verify safety requirements are met prior to increasing power above the limits of Action a.1. The proposed changes involve only the compensatory measures to be taken should the QPTR be outside its limit. These compensatory measures are not assumed in the initiating events for any accident previously evaluated. Therefore, the proposed change will not affect the probability or consequences of any accident previously evaluated.

4. Deletion of the Actions for QPTR in excess of 1.09

The proposed change would delete the required Actions for QPTR in excess of 1.09 and Actions for QPTR in excess of 1.02 are followed for all instances where QPTR exceeds 1.02. The proposed change involves only the compensatory measures to be taken should the QPTR be outside its limit. These compensatory measures are not assumed in the initiating events for any accident previously evaluated. The proposed actions recognize that the required reduction in power (3% for each 1% of indicated QPTR in excess of 1.00) provide adequate margin for fuel design limits so that consequences of assumed accidents would not be significantly affected. Therefore, the proposed change will not affect the probability or consequences of any accident previously analyzed.

2. The proposed change does not create the possibility of a new or different kind of accident from any accident previously evaluated.

1. Requirements for Determining QPTR

The proposed change for calculating QPTR once every 12 hours does not involve a physical alteration to the plant or change the method by which any safety-related system performs its function. The manner in which the plant would be operated would not be altered. Therefore, the proposed change will not create the possibility of a new or different kind of accident from any previously evaluated.

2. Completion Time for Resetting the Power Range Neutron Flux-High Trip Setpoints

The proposed change to allow 72 hours for resetting the Power Range Neutron Flux-High trip setpoints does not involve a permanent physical alteration to the plant; no new or different kinds of equipment will be installed. The change would not alter the manner in which the plant would be operated only the timing of actions that provide potential mitigation of accidents. Thus, the change would not create the possibility of a new or different kind of accident from any accident previously evaluated.

3. Delete the Actions (a.3., a.4.) for verifying QPTR to be restored within 24 hours and for identifying and correcting the cause of the out-of-limit condition prior to increasing THERMAL POWER

The proposed changes would delete current Actions a.3, and a.4. and add new Actions for QPTR out-of-limit including requirements for measuring $F_Q(Z)$ and F^N delta H prior to and following a return to power and performing safety analyses to verify safety requirements are met prior to increasing power above the limits of Action a.1. The proposed changes do not involve a physical alteration to the plant; no new or different kinds of equipment would be installed. The changes would not alter the manner in which the plant would be operated only the timing of actions that provide potential mitigation of accidents. Thus, the changes would not create the possibility of a new or different kind of accident from any accident previously evaluated.

4. Deletion of the Actions for QPTR in excess of 1.09

The proposed change would delete the required Actions for QPTR in excess of 1.09 and Actions for QPTR in excess of 1.02 are followed for all instances where QPTR exceeds 1.02. The proposed change does not involve a physical alteration to the plant or changes in the way in which the plant is operated. The proposed change involves only the compensatory measures to be taken should QPTR be outside its limit. The assumptions of the accident analyses are unaffected by the proposed change. No new permutations or event initiators are introduced by the proposed alternate methods of dealing with QPTRs in excess of 1.09. Therefore, there is no possibility of a new or different kind of accident from any accident previously evaluated.

3. The proposed change does not involve a significant reduction in a margin of safety.

1. Requirements for Determining QPTR

The proposed change for calculating QPTR once every 12 hours does not change any accident analysis assumptions, initial conditions or results. The proposed change will continue to ensure that the plant is maintained in a safe condition while QPTR is in excess of its limit. Additionally, calculating QPTR once per 12 hours as opposed to every hour while QPTR is in excess of its limit would avoid the diversion of personnel resources from corrective actions with regard to meeting the LCO. Therefore, the proposed change will not involve a significant reduction in any margin of safety.

2. Completion Time for Resetting the Power Range Neutron Flux-High Trip Setpoints

The proposed change to allow 72 hours for resetting the Power Range Neutron Flux-High trip setpoints will continue to ensure that the plant is maintained in a safe condition within the envelope of the safety analyses while QPTR is in excess of its limit. The proposed actions recognize that the required reduction in power (3% for each 1% of indicated QPTR in excess of 1.00) provide adequate margin for fuel design limits so that consequences of assumed accidents would not be significantly affected. Therefore, the proposed change will not involve a significant reduction in any margin of safety.

3. Delete the Actions (a.3., a.4.) for verifying QPTR to be restored within 24 hours and for identifying and correcting the cause of the out-of-limit condition prior to increasing THERMAL POWER

The proposed changes would delete current Actions a.3. and a.4 and add new Actions for QPTR out-of-limit including requirements for measuring $F_Q(Z)$ and F^N delta H prior to and following a return to power and performing safety analyses to verify safety requirements are met prior to increasing power above the limits of Action a.1. The proposed changes will continue to ensure that the plant is maintained in a safe condition within the envelope of the safety analysis while QPTR is in excess of its limit. Therefore, the proposed changes will not involve a significant reduction in any margin of safety.

4. Deletion of the Actions for QPTR in excess of 1.09

The proposed change would delete the required Actions for QPTR in excess of 1.09

and Action for QPTR in excess of 1.02 are followed for all instances where QPTR exceeds 1.02. The proposed change will continue to ensure that the plant is maintained in a safe condition within the envelope of the safety analyses while QPTR is in excess of its limit. While different actions are taken in response to a QPTR in excess of 1.09, the proposed change will assure that accident analyses assumptions continue to be met. Therefore, the proposed changes will not involve a significant reduction in any margin of safety.

The NRC staff has reviewed the licensee's analysis and, based on this review, it appears that the three standards of 10 CFR 50.92(c) are satisfied. Therefore, the NRC staff proposes to determine that the amendment request involves no significant hazards consideration.

Local Public Document Room locations: Emporia State University, William Allen White Library, 1200 Commercial Street, Emporia, Kansas 66801 and Washburn University School of Law Library, Topeka, Kansas 66621.

Attorney for licensee: Jay Silberg, Esq., Shaw, Pittman, Potts and Trowbridge, 2300 N Street, N.W., Washington, D.C. 20037.

NRC Project Director: William H. Bateman.

Wolf Creek Nuclear Operating Corporation, Docket No. 50–482, Wolf Creek Generating Station, Coffey County, Kansas

Date of amendment request: February 4, 1998.

Description of amendment request: The amendment would revise the technical specifications to (1) create separate functional units for the analog and digital portions of the engineered safety features actuation system (ESFAS) function associated with starting the turbine-driven auxiliary feedwater pump on a loss of offsite power, and (2) add a table notation to clarify that the testing of the time delay relays for the 4 kV undervoltage, loss of voltage and grid degraded voltage portion of the ESFAS is performed as part of the channel calibration.

Basis for proposed no significant hazards consideration determination: As required by 10 CFR 50.91(a), the licensee has provided its analysis of the issue of no significant hazards consideration, which is presented below:

1. The proposed change does not involve a significant increase in the probability or consequences of an accident previously evaluated.

Overall protection system performance will remain within the bounds of the previously performed accident analyses since no hardware changes are proposed. The recognition that different OPERABILITY and surveillance requirements apply to analog vs. digital circuitry does not impact any previously analyzed accidents. The clarification that testing of the time delay relays is performed as part of the CHANNEL CALIBRATION does not impact any previously analyzed events. The proposed change will not affect any of the analysis assumptions for any of the accidents previously evaluated. The proposed change does not alter the current method or procedures for meeting the surveillance requirements in Table 4.3–2. The proposed change will not affect the probability of any event initiators nor will the proposed change affect the ability of any safety-related equipment to perform its intended function. There will be no degradation in the performance of nor an increase in the number of challenges imposed on safety-related equipment assumed to function during an accident situation. Therefore, the proposed change does not involve a significant increase in the probability or consequences of an accident previously evaluated.

2. The proposed change does not create the possibility of a new or different kind of accident from any accident previously evaluated.

There are no hardware changes nor are there any changes in the method by which any safety-related plant system performs its safety function. The separation of analog and digital portions of Functional Unit 6.f or the clarification of testing of the time delay relays will not impact the normal method of plant operation.

The OPERABILITY requirements, ACTION Statement, and surveillance requirements for the analog portion, new Functional Unit 6.f.1), are identical to those of Functional Unit 8.a, while the requirements for the digital portion, new Functional Unit 6.f.2), are consistent with the current technical specifications, other than the new ACTION Statement 30 provisions that defer to the TDAFW pump Specification 3.7.1.2 requirements and the performance of a TADOT during appropriate plant conditions. These changes do not change any ESFAS design standard and are appropriate for digital functions such as this.

Testing of the time delay relays has been performed as part of the 18 month CHANNEL CALIBRATION. The tolerancesfor the time delay relays are sufficient to account for relay drift encountered during the 18 month surveillance testing. The calculated tolerances for the time delay setpoints have been evaluated to insure that safety-related systems, subsystems and components would not be adversely affect[ed] by the drift within the permissible tolerance band.

No new accident scenarios, transient precursors, failure mechanisms, or limiting single failures are introduced as a result of this change. Therefore, the proposed change does not create the possibility of a new or different kind of accident from any previously evaluated.

3. The proposed change does not involve a significant reduction in a margin of safety.

The proposed change does not affect the acceptance criteria for any analyzed event. There will be no effect on the manner in which safety limits or limiting safety system settings are determined nor will there be any effect on those plant systems necessary to assure the accomplishment of protection functions. There will be no impact on any margin of safety.

The NRC staff has reviewed the licensee's analysis and, based on this review, it appears that the three standards of 10 CFR 50.92(c) are satisfied. Therefore, the NRC staff proposes to determine that the amendment request involves no significant hazards consideration.

Local Public Document Room locations: Emporia State University, William Allen White Library, 1200 Commercial Street, Emporia, Kansas 66801 and Washburn University School of Law Library, Topeka, Kansas 66621.

Attorney for licensee: Jay Silberg, Esq., Shaw, Pittman, Potts and Trowbridge, 2300 N Street, N.W., Washington, D.C. 20037.

NRC Project Director: William H. Bateman.

Previously Published Notices of Consideration of Issuance of Amendments toFacility Operating Licenses, Proposed No Significant Hazards Consideration Determination, and Opportunity for a Hearing

The following notices were previously published as separate individual notices. The notice content was the same as above. They were published as individual notices either because time did not allow the Commission to wait for this biweekly notice or because the action involved exigent circumstances. They are repeated here because the biweekly notice lists all amendments issued or proposed to be issued involving no significant hazards consideration.

For details, see the individual notice in the **Federal Register** on the day and page cited. This notice does not extend the notice period of the original notice.

Pennsylvania Power and Light Company, Docket Nos. 50–387 and 50–388, Susquehanna Steam Electric Station, Units 1 and 2, Luzerne County, Pennsylvania

Date of amendment request: January 26, 1998.

Brief description of amendment request: The proposed amendment would change the SSES Technical Specifications facility staff requirements to allow an individual who does not hold a current senior reactor operator (SRO) license to hold the position of Manager-Nuclear Operations (MNO) and require an individual serving in the capacity of the Operations Supervisor-Nuclear to hold a current SRO license

and report directly to the MNO and be responsible for directing the licensed activities of licensed operators.

Date of publication of individual notice in Federal Register: February 24, 1998 (63 FR 9270).

Expiration date of individual notice: March 26, 1998.

Local Public Document Room location: Osterhout Free Library, Reference Department, 71 South Franklin Street, Wilkes-Barre, PA 18701.

TU Electric Company, Docket Nos. 50–445 and 50–446, Comanche Peak Steam Electric Station, Units 1 and 2, Somervell County, Texas

Date of amendment request: February 25, 1998, TXX–98050.

Description of amendment request: The proposed amendment would be a temporary change to the Technical Specifications to remove the requirement to demonstrate the load shedding feature of MCC XEB4–3 as part of Surveillance Requirements (SRs) 4.8.1.1.2f.4)a) and 4.8.1.1.2f.6)a) until the plant startup subsequent to the next refueling outage or until an outage of greater than 24 hours in duration for each respective unit. This temporary change is requested as a result of the failure to confirm the load shedding feature of MCC XEB4–3 during the last performance of these SRs for the Unit 1 and Unit 2 train B diesel generators (DGs).

Date of individual notice in the **Federal Register:** March 9, 1998, (63 FR 11458).

Expiration date of individual notice: April 8, 1998.

Local Public Document Room location: University of Texas at Arlington Library, Government Publications/Maps, 702 College, P.O. Box 19497, Arlington, TX 76019.

Notice of Issuance of Amendments to Facility Operating Licenses

During the period since publication of the last biweekly notice, the Commission has issued the following amendments. The Commission has determined for each of these amendments that the application complies with the standards and requirements of the Atomic Energy Act of 1954, as amended (the Act), and the Commission's rules and regulations. The Commission has made appropriate findings as required by the Act and the Commission's rules and regulations in 10 CFR Chapter I, which are set forth in the license amendment.

Notice of Consideration of Issuance of Amendment to Facility Operating License, Proposed No Significant Hazards Consideration Determination, and Opportunity for A Hearing in connection with these actions was published in the **Federal Register** as indicated.

Unless otherwise indicated, the Commission has determined that these amendments satisfy the criteria for categorical exclusion in accordance with 10 CFR 51.22. Therefore, pursuant to 10 CFR 51.22(b), no environmental impact statement or environmental assessment need be prepared for these amendments. If the Commission has prepared an environmental assessment under the special circumstances provision in 10 CFR 51.12(b) and has made a determination based on that assessment, it is so indicated.

For further details with respect to the action see (1) the applications for amendment, (2) the amendment, and (3) the Commission's related letter, Safety Evaluation and/or Environmental Assessment as indicated. All of these items are available for public inspection at the Commission's Public Document Room, the Gelman Building, 2120 L Street, NW., Washington, DC, and at the local public document rooms for the particular facilities involved.

Arizona Public Service Company, et al., Docket Nos. STN 50–528, STN 50–529, and STN 50–530, Palo Verde Nuclear Generating Station, Units Nos. 1, 2, and 3, Maricopa County, Arizona

Date of application for amendments: March 18, 1997, as supplemented by letters dated July 28, 1997, and September 9, 1997.

Brief description of amendments: The amendments revise the operating licenses to reflect approval of Amendment 42 to the Palo Verde Nuclear Generating Station Physical Security Plan. The amendments revise the methods used to search materials, packages, and personnel prior to their entry into the protected area, as described in the security plan.

Date of issuance: March 4, 1998.

Effective date: March 4, 1998.

Amendment No.: Unit 1–115; Unit 2–108; Unit 3–87.

Facility Operating License Nos. NPF–41, NPF–51, and NPF–74: The amendments revised the operating licenses.

Date of initial notice in **Federal Register**: October 8, 1997 (62 FR 52580).

The Commission's related evaluation of the amendment is contained in a Safety Evaluation dated March 4, 1998.

No significant hazards consideration comments received: No.

Local Public Document Room location: Phoenix Public Library, 1221 N. Central Avenue, Phoenix, Arizona 85004.

Carolina Power & Light Company, Docket No. 50–261, H. B. Robinson Steam Electric Plant, Unit No. 2, Darlington County, South Carolina

Date of application for amendment: December 17, 1997, as supplemented by letters dated February 6, 1998 and March 12, 1998.

Brief description of amendment: The proposed change would revise Technical Specifications Section 5.6.5, ''Core Operating Limits Report.'' The revisions add reference to an additional approved methodology for correlating departure from nucleate boiling (DNB) ratios. The added methodology is the Siemens Power Corporation Topical Report, EMF–92–153(P)(A), ''HTP: Departure from Nucleate Boiling Correlation for High Thermal Performance Fuel.''

Date of issuance: March 16, 1998.

Effective date: March 16, 1998.

Amendment No. 178.

Facility Operating License No. DPR–23. Amendment revises the Technical Specifications.

Date of initial notice in **Federal Register**: January 28, 1998 (63 FR 4309). The February 6 and March 12, 1998 submittals provided clarifying information that did not affect the initial determination of no significant hazards considerations. The Commission's related evaluation of the amendment is contained in a Safety Evaluation dated March 16, 1998.

No significant hazards consideration comments received: No.

Local Public Document Room location: Hartsville Memorial Library, 147 West College Avenue, Hartsville, South Carolina 29550.

Commonwealth Edison Company, Docket Nos. 50–237 and 50–249, Dresden Nuclear Power Station, Units 2 and 3, Grundy County, Illinois, Docket Nos. 50–254 and 50–265, Quad Cities Nuclear Power Station, Units 1 and 2, Rock Island County, Illinois

Date of application for amendments: October 27, 1997.

Brief description of amendments: The amendments would change the Dresden and Quad Cities Technical Specifications (TS) to clarify the applicability, action and surveillance requirements for the Standby Liquid Control System (SLCS). The changes would make the current TS requirements for the SLCS consistent with the Improved Standard Technical Specifications (ISTS) contained in NUREG–1433, ''Standard Technical Specifications General Electric Plants, BWR/4.''

Date of issuance: March 6, 1998.

Effective date: Immediately, to be implemented within 30 days.

Amendment Nos.: 167, 162, and 180, 178.

Facility Operating License Nos. DPR–19, DPR–25, DPR–29 and DPR–30: The amendments revised the Technical Specifications.

Date of initial notice in **Federal Register**: January 14, 1998 (63 FR 2277).

The Commission's related evaluation of the amendments is contained in a Safety Evaluation dated March 6, 1998.

No significant hazards consideration comments received: No.

Local Public Document Room location: for Dresden, Morris Area Public Library District, 604 Liberty Street, Morris, Illinois 60450; for Quad Cities, Dixon Public Library, 221 Hennepin Avenue, Dixon, Illinois 61021.

Consolidated Edison Company of New York, Docket No. 50–247, Indian PointNuclear Generating Unit No. 2, Westchester County, New York

Date of application for amendment: October 2, 1996, as supplemented July 31, 1997.

Brief description of amendment: The amendment revises Figures 3.1.A–1, 3.1.A–2 and 3.1.A–3, Section 3.1.B and its Bases, Figures 3.1.B–1 and 3.1.B–2, and the Bases of Section 4.3 and Figure 4.3–1 of the Technical Specifications to incorporate the revised Indian Point Unit 2 Heatup and Cooldown Limit Curves for Normal Operation.

Date of issuance: February 27, 1998.

Effective date: As of the date of issuance to be implemented within 30 days.

Amendment No.: 195.

Facility Operating License No. DPR–26: Amendment revised the Technical Specifications.

Date of initial notice in **Federal Register:** November 19, 1996 (61 FR 58901).

The July 31, 1997, letter provided clarifying information that did not change the initial proposed no significant hazards consideration.

The Commission's related evaluation of the amendment is contained in a Safety Evaluation dated February 27, 1998.

No significant hazards consideration comments received: No.

Local Public Document Room location: White Plains Public Library, 100 Martine Avenue, White Plains, New York 10610.

Duke Energy Corporation, et al., Docket Nos. 50–413 and 50–414, Catawba Nuclear Station, Units 1 and 2, York County, South Carolina

Date of application for amendments: December 17, 1997Brief description of amendments: The amendments revise Section 6.9.1.9 of the Technical Specifications to reference updated or recently approved topical reports, which contain methodologies used to calculate cycle-specific limits contained in the Core Operating Limits Report.

Date of issuance: March 2, 1998.

Effective date: As of the date of issuance to be implemented within 30 days.

Amendment Nos.: Unit 1–163; Unit 2–155.

Facility Operating License Nos. NPF–35 and NPF–52: Amendments revised the Technical Specifications.

Date of initial notice in **Federal Register:** January 28, 1998 (63 FR 4310).

The Commission's related evaluation of the amendments is contained in a Safety Evaluation dated March 2, 1998.

No significant hazards consideration comments received: No.

Local Public Document Room location: York County Library, 138 East Black Street, Rock Hill, South Carolina.

Entergy Operations, Inc., Docket No. 50–368, Arkansas Nuclear One, Unit No. 2, Pope County, Arkansas

Date of application for amendment: July 21, 1997, as supplemented February 18, 1998.

Brief description of amendment: Technical Specification Change Request concerning Emergency Feedwater Surveillance Testing. This request is to make several changes to the ANO–2 Technical Specifications including extension of the emergency feedwater (EFW) pump surveillance testing frequency, a reduction in the minimum steam generator pressure required to perform the surveillance testing on the turbine-driven EFW pump, and a modification to the EFW pump testing requirements.

Date of issuance: March 12, 1998.

Effective date: March 12, 1998.

Amendment No.: 188.

Facility Operating License No. NPF–6: Amendment revised the Technical Specifications/license.

Date of initial notice in **Federal Register:** August 13, 1997 (62 FR 43367).

The Commission's related evaluation of the amendment is contained in a Safety Evaluation dated March 12, 1998.

No significant hazards consideration comments received: No.

Local Public Document Room location: Tomlinson Library, Arkansas Tech University, Russellville, AR 72801.

Entergy Operations, Inc., Docket No. 50–368, Arkansas Nuclear One, Unit No. 2, Pope County, Arkansas

Date of application for amendment: September 23, 1997, as supplemented by letters dated February 27 and March 4, 1998.

Brief description of amendment: The amendment changes the Reactor Protective System (RPS) and Engineering Safety Actuation System (ESFAS) trip set point and allowable values for steam generator low pressure. The amendment also relocates the RPS and ESFAS response time tables from the Technical Specifications to the Safety Analysis Report as described in NRC Generic Letter 93–08, ''Relocation of Technical Specification Tables of Instrument Response Time Limits,'' dated December 29, 1993.

Date of issuance: March 12, 1998.

Effective date: March 12, 1998.

Amendment No.: 189.

Facility Operating License No. NPF–6: Amendment revised the Technical Specifications/license.

Date of initial notice in **Federal Register:** January 28, 1998, (63 FR 4311).

The Commission's related evaluation of the amendment is contained in a Safety Evaluation dated March 12, 1998.

No significant hazards consideration comments received: No.

Local Public Document Room location: Tomlinson Library, Arkansas Tech University, Russellville, AR 72801.

Entergy Operations, Inc., Docket No. 50–368, Arkansas Nuclear One, Unit No. 2, Pope County, Arkansas

Date of application for amendment: September 23, 1997, as supplemented by letters dated February 27 and March 4, 1998.

Brief description of amendment: The amendment reduces the minimum required reactor coolant system flow rate in TS 3.2.5 until the ANO–2 steam generators are replaced. The reduced reactor coolant system flow requirement will account for plugging of up to approximately 30 percent of the tubes in the existing steam generators at ANO–2.

Date of issuance: March 12, 1998.

Effective date: March 12, 1998.

Amendment No.: 190.

Facility Operating License No. NPF–6: Amendment revised the Technical Specifications/license.

Date of initial notice in **Federal Register:** January 28, 1998, (63 FR 4312).

The Commission's related evaluation of the amendment is contained in a Safety Evaluation dated March 12, 1998.

No significant hazards consideration comments received: No.

Local Public Document Room location: Tomlinson Library, Arkansas Tech University, Russellville, AR 72801.

Florida Power Corporation, et al., Docket No. 50–302, Crystal River Unit No. 3 Nuclear Generating Plant, Citrus County, Florida

Date of application for amendment: December 5, 1997, as supplemented December 11, 1997, January 9, February 12 and 19, 1998.

Brief description of amendment: To revise the Final Safety Analysis Report (FSAR) and the Improved Technical Specification Bases to reflect the modified reactor building fan recirculation system fan cooler starting logic.

Date of issuance: March 9, 1998.

Effective date: March 9, 1998.

Amendment No.: 165.

Facility Operating License No. DPR–31: Amendment revised the Technical Specifications.

Date of initial notice in **Federal Register:** January 15, 1998 (63 FR 2423). The supplemental letters dated December 11, 1997, January 9, February 12 and 19, 1998, did not change the original no significant hazards consideration determination.

The Commission's related evaluation of the amendment is contained in a Safety Evaluation dated March 9, 1998.

No significant hazards consideration comments received: No.

Local Public Document Room location: Coastal Region Library, 8619 W. Crystal Street, Crystal River, Florida.

Attorney for licensee: R. Alexander Glenn, General Counsel, Florida Power Corporation, MAC–A5A, P.O. Box 14042, St. Petersburg, Florida 33733–4042.

NRC Project Director: Frederick J. Hebdon.

Pacific Gas and Electric Company, Docket Nos. 50–275 and 50–323, Diablo Canyon Nuclear Power Plant, Unit Nos. 1 and 2, San Luis Obispo County, California

Date of application for amendments: May 14, 1997, as supplemented by letter dated October 9, 1997 (published in **Federal Register** as May 15, 1997).

Brief description of amendments: The amendments revised the combined Technical Specifications (TS) for the Diablo Canyon Power Plant (DCPP) Unit Nos. 1 and 2 to revise the surveillance frequencies from at least once every 18 months to at least once per refueling interval (nominally 24 months) including (1) reactor coolant system total flow rate, (2) instrumentation for radiation monitoring, (3) instrumentation and controls for remote shutdown, (4) instrumentation for accident monitoring, and (5) several miscellaneous TS.

Date of issuance: February 27, 1998.

Effective date: February 27, 1998, to be implemented within 90 days of the date of issuance.

Amendment Nos.: Unit 1–123; Unit 2–121.

Facility Operating License Nos. DPR–80 and DPR–82: The amendments revised the Technical Specifications.

Date of initial notice in **Federal Register:** July 30, 1997 (62 FR 40855).

The October 9, 1997, supplemental letter provided additional clarifying information and did not change the staff's initial no significant hazards consideration determination.

The Commission's related evaluation of the amendments is contained in a Safety Evaluation dated February 27, 1998.

No significant hazards consideration comments received: No.

Local Public Document Room location: California Polytechnic State University, Robert E. Kennedy Library, Government Documents and Maps Department, San Luis Obispo, California 93407.

Power Authority of the State of New York, Docket No. 50–286, Indian Point Nuclear Generating Unit No. 3, Westchester County, New York

Date of application for amendment: January 2, 1997, as supplemented November 13, 1997.

Brief description of amendment: The amendment changes the Technical Specifications by extending the surveillance interval for the functional testing of certain Inservice Inspection American Society of Mechanical Engineers Code Class 1, 2, and 3 pumps and valves from once a month to once a quarter.

Date of issuance: March 2, 1998.

Effective date: As of the date of issuance to be implemented within 30 days.

Amendment No.: 178.

Facility Operating License No. DPR–64: Amendment revises the Technical Specifications.

Date of initial notice in **Federal Register:** March 26, 1997 (62 FR 14468).

The November 13, 1997, submittal contained clarifying information that did not change the staff's proposed finding of no significant hazards consideration.

The Commission's related evaluation of the amendment is contained in a Safety Evaluation dated March 2, 1998.

No significant hazards consideration comments received: No.

Local Public Document Room location: White Plains Public Library, 100 Martine Avenue, White Plains, New York 10601.

Power Authority of the State of New York, Docket No. 50–333, James A. FitzPatrick Nuclear Power Plant, Oswego County, New York

Date of application for amendment: December 14, 1995, as supplemented September 26, 1997.

Brief description of amendment: The amendment changes the James A. FitzPatrick Technical Specifications (TSs) to incorporate the inservice testing requirements of Section XI of the American Society of Mechanical Engineers Boiler and Pressure Vessel Code. The amendment supplements Amendment No. 241, dated December 2, 1997, by issuing seven TS pages inadvertently omitted from Amendment No. 241.

Date of issuance: February 27, 1998.

Effective date: As of the date of issuance to be implemented within 30 days.

Amendment No.: 242.

Facility Operating License No. DPR–59: Amendment revised the Technical Specifications.

Date of initial notice in **Federal Register**: January 22, 1996 (61 FR 1635).

The September 26, 1997, letter provided clarifying information that did not change the initial proposed no significant hazards consideration determination.

The Commission's related evaluation of the amendment is contained in a Safety Evaluation dated February 27, 1998.

No significant hazards consideration comments received: No.

Local Public Document Room location: Reference and Documents Department, Penfield Library, State University of New York, Oswego, New York 13126.

Public Service Electric & Gas Company, Docket Nos. 50–272 and 50–311, Salem Nuclear Generating Station, Unit Nos. 1 and 2, Salem County, New Jersey

Date of application for amendments: December 15, 1997.

Brief description of amendments: The amendments revise the Technical Specifications (TSs) to adopt Option B, of 10 CFR Part 50, Appendix J, ''Primary Reactor Containment Leakage Testing for Water-Cooled Power Reactors,'' to implement a performance-based approach for Type B and C testing. Additionally, the wording in the TSs would be modified for the previous adoption of Option B on Type A testing and a section added on the primary

containment leakage rate testing program.

Date of issuance: February 27, 1998.

Effective date: As of the date of issuance, to be implemented within 60 days.

Amendment Nos: 207 and 188.

Facility Operating License Nos. DPR–70 and DPR–75: The amendments revised the Technical Specifications.

Date of initial notice in **Federal Register**: January 14, 1998 (63 FR 2281).

The Commission's related evaluation of the amendments is contained in a Safety Evaluation dated February 27, 1998.

No significant hazards consideration comments received: No.

Local Public Document Room location: Salem Free Public Library, 112 West Broadway, Salem, NJ 08079.

STP Nuclear Operating Company, Docket Nos. 50–498 and 50–499, South Texas Project, Units 1 and 2, Matagorda County, Texas

Date of amendment request: December 17, 1997.

Brief description of amendments: The amendments extended the surveillance interval of the containment spray nozzle air flow test to ten years from five years.

Date of issuance: March 11, 1998.

Effective date: March 11, 1998.

Amendment Nos.: Unit 1—Amendment No. 94; Unit 2—Amendment No. 81.

Facility Operating License Nos. NPF–76 and NPF–80: The amendments revised the Technical Specifications.

Date of initial notice in **Federal Register**: January 28, 1998 (63 FR 4325).

The Commission's related evaluation of the amendments is contained in a Safety Evaluation dated March 11, 1998.

No significant hazards consideration comments received: No.

Local Public Document Room location: Wharton County Junior College, J.M. Hodges Learning Center, 911 Boling Highway, Wharton, TX 77488.

The Cleveland Electric Illuminating Company, Centerior Service Company, Duquesne Light Company, Ohio Edison Company, OES Nuclear, Inc., Pennsylvania Power Company, Toledo Edison Company, Docket No. 50–440 Perry Nuclear Power Plant, Unit 1, Lake County, Ohio.

Date of application for amendment: December 23, 1997.

Brief description of amendment: This amendment revised Technical Specification 3.8.1, ''A.C. Sources—Operating,'' consistent with the recommendations in NRC Generic Letter 94–01, ''Removal of Accelerated Testing and Special Reporting Requirements for Emergency Diesel Generators.''

Date of issuance: March 12, 1998.

Effective date: March 12, 1998.

Amendment No.: 92.

Facility Operating License No. NPF–58: This amendment revised the Technical Specifications.

Date of initial notice in **Federal Register**: January 28, 1998 (63 FR 4326).

The Commission's related evaluation of the amendment is contained in a Safety Evaluation dated March 12, 1998.

No significant hazards consideration comments received: No.

Local Public Document Room location: Perry Public Library, 3753 Main Street, Perry, OH 44081.

Vermont Yankee Nuclear Power Corporation, Docket No. 50–271, Vermont Yankee Nuclear Power Station, Vernon, Vermont

Date of application for amendment: July 11, 1997, as supplemented November 21, December 22, 1997, and February 6, 1998.

Brief description of amendment: The amendment revised Technical Specifications 3.7/4.7 and their associated Bases to incorporate Option B of Appendix J to 10 CFR 50, and editorial changes to TS Table 4.7.2

Date of Issuance: February 26, 1998.

Effective date: February 26, 1998, with full implementation within 30 days.

Amendment No.: 152.

Facility Operating License No. DPR–28: Amendment revised the Technical Specifications.

Date of initial notice in **Federal Register**: (62 FR 45465). The November 21, December 22, 1997, and February 6, 1998, letters did not change the initial proposed no significant hazards determination.

The Commission's related evaluation of this amendment is contained in a Safety Evaluation dated February 26, 1998.

No significant hazards consideration comments received: No.

Local Public Document Room location: Brooks Memorial Library, 224 Main Street, Brattleboro, VT 05301.

Vermont Yankee Nuclear Power Corporation, Docket No. 50–271, Vermont Yankee Nuclear Power Station, Vernon, Vermont

Date of application for amendment: November 20, 1997.

Brief description of amendment: The amendment revised Technical Specification (TS) 3.10 and its associated Bases to eliminate the use of battery charger AB for meeting the requirement of the TS.

Date of issuance: March 5, 1998.

Effective Date: This license amendment is effective as of its date of issuance, to be implemented within 30 days.

Amendment No.: 153

Facility Operating License No. DPR–28: Amendment revised the Technical Specifications.

Date of initial notice in **Federal Register**: December 31, 1997 (62 FR 68319).

The Commission's related evaluation of the amendment is contained in a Safety Evaluation dated March 5, 1998.

No significant hazards consideration comments received: No.

Local Public Document Room location: Brooks Memorial Library, 224 Main Street, Brattleboro, VT 05301.

Vermont Yankee Nuclear Power Corporation, Docket No. 50–271, Vermont Yankee Nuclear Power Station, Vernon, Vermont

Date of application for amendment: August 22, 1997, as supplemented by letter dated September 18 and October 31, 1997.

Brief description of amendment: The amendment revises the Technical Specifications to address the new low pressure CO2 suppression system for the East and West Switchgear Rooms and more clearly describes the separation of the two rooms.

Date of Issuance: March 6, 1998.

Effective date: As of the date of issuance, to be implemented within 30 days.

Amendment No.: 154.

Facility Operating License No. DPR–28: Amendment revised the Technical Specifications.

Date of initial notice in **Federal Register**: October 8, 1997 (62 FR 52590). Information provided by letter dated October 31, 1997, did not affect the original no significant hazards consideration.

The Commission's related evaluation of this amendment is contained in a Safety Evaluation dated March 6, 1998.

No significant hazards consideration comments received: No.

Local Public Document Room location: Brooks Memorial Library, 224 Main Street, Brattleboro, VT 05301.

Notice of Issuance of Amendments to Facility Operating Licenses and Final Determination of No Significant Hazards Consideration and Opportunity for a Hearing (Exigent Public Announcement or Emergency Circumstances)

During the period since publication of the last biweekly notice, the Commission has issued the following

amendments. The Commission has determined for each of these amendments that the application for the amendment complies with the standards and requirements of the Atomic Energy Act of 1954, as amended (the Act), and the Commission's rules and regulations. The Commission has made appropriate findings as required by the Act and the Commission's rules and regulations in 10 CFR Chapter I, which are set forth in the license amendment.

Because of exigent or emergency circumstances associated with the date the amendment was needed, there was not time for the Commission to publish, for public comment before issuance, its usual 30-day Notice of Consideration of Issuance of Amendment, Proposed No Significant Hazards Consideration Determination, and Opportunity for a Hearing.

For exigent circumstances, the Commission has either issued a **Federal Register** notice providing opportunity for public comment or has used local media to provide notice to the public in the area surrounding a licensee's facility of the licensee's application and of the Commission's proposed determination of no significant hazards consideration. The Commission has provided a reasonable opportunity for the public to comment, using its best efforts to make available to the public means of communication for the public to respond quickly, and in the case of telephone comments, the comments have been recorded or transcribed as appropriate and the licensee has been informed of the public comments.

In circumstances where failure to act in a timely way would have resulted, for example, in derating or shutdown of a nuclear power plant or in prevention of either resumption of operation or of increase in power output up to the plant's licensed power level, the Commission may not have had an opportunity to provide for public comment on its no significant hazards consideration determination. In such case, the license amendment has been issued without opportunity for comment. If there has been some time for public comment but less than 30 days, the Commission may provide an opportunity for public comment. If comments have been requested, it is so stated. In either event, the State has been consulted by telephone whenever possible.

Under its regulations, the Commission may issue and make an amendment immediately effective, notwithstanding the pendency before it of a request for a hearing from any person, in advance of the holding and completion of any required hearing, where it has determined that no significant hazards consideration is involved.

The Commission has applied the standards of 10 CFR 50.92 and has made a final determination that the amendment involves no significant hazards consideration. The basis for this determination is contained in the documents related to this action. Accordingly, the amendments have been issued and made effective as indicated.

Unless otherwise indicated, the Commission has determined that these amendments satisfy the criteria for categorical exclusion in accordance with 10 CFR 51.22. Therefore, pursuant to 10 CFR 51.22(b), no environmental impact statement or environmental assessment need be prepared for these amendments. If the Commission has prepared an environmental assessment under the special circumstances provision in 10 CFR 51.12(b) and has made a determination based on that assessment, it is so indicated.

For further details with respect to the action see (1) the application for amendment, (2) the amendment to Facility Operating License, and (3) the Commission's related letter, Safety Evaluation and/or Environmental Assessment, as indicated. All of these items are available for public inspection at the Commission's Public Document Room, the Gelman Building, 2120 L Street, NW., Washington, DC, and at the local public document room for the particular facility involved.

The Commission is also offering an opportunity for a hearing with respect to the issuance of the amendment. By April 24, 1998, the licensee may file a request for a hearing with respect to issuance of the amendment to the subject facility operating license and any person whose interest may be affected by this proceeding and who wishes to participate as a party in the proceeding must file a written request for a hearing and a petition for leave to intervene. Requests for a hearing and a petition for leave to intervene shall be filed in accordance with the Commission's ''Rules of Practice for Domestic Licensing Proceedings'' in 10 CFR Part 2. Interested persons should consult a current copy of 10 CFR 2.714 which is available at the Commission's Public Document Room, the Gelman Building, 2120 L Street, NW., Washington, DC and at the local public document room for the particular facility involved. If a request for a hearing or petition for leave to intervene is filed by the above date, the Commission or an Atomic Safety and Licensing Board, designated by the Commission or by the Chairman of the Atomic Safety and Licensing Board Panel, will rule on the request and/or petition; and the Secretary or the designated Atomic Safety and Licensing Board will issue a notice of a hearing or an appropriate order.

As required by 10 CFR 2.714, a petition for leave to intervene shall set forth with particularity the interest of the petitioner in the proceeding, and how that interest may be affected by the results of the proceeding. The petition should specifically explain the reasons why intervention should be permitted with particular reference to the following factors: (1) The nature of the petitioner's right under the Act to be made a party to the proceeding; (2) the nature and extent of the petitioner's property, financial, or other interest in the proceeding; and (3) the possible effect of any order which may be entered in the proceeding on the petitioner's interest. The petition should also identify the specific aspect(s) of the subject matter of the proceeding as to which petitioner wishes to intervene. Any person who has filed a petition for leave to intervene or who has been admitted as a party may amend the petition without requesting leave of the Board up to 15 days prior to the first prehearing conference scheduled in the proceeding, but such an amended petition must satisfy the specificity requirements described above.

Not later than 15 days prior to the first prehearing conference scheduled in the proceeding, a petitioner shall file a supplement to the petition to intervene which must include a list of the contentions which are sought to be litigated in the matter. Each contention must consist of a specific statement of the issue of law or fact to be raised or controverted. In addition, the petitioner shall provide a brief explanation of the bases of the contention and a concise statement of the alleged facts or expert opinion which support the contention and on which the petitioner intends to rely in proving the contention at the hearing. The petitioner must also provide references to those specific sources and documents of which the petitioner is aware and on which the petitioner intends to rely to establish those facts or expert opinion. Petitioner must provide sufficient information to show that a genuine dispute exists with the applicant on a material issue of law or fact. Contentions shall be limited to matters within the scope of the amendment under consideration. The contention must be one which, if proven, would entitle the petitioner to relief. A petitioner who fails to file such a supplement which satisfies these

requirements with respect to at least one contention will not be permitted to participate as a party.

Those permitted to intervene become parties to the proceeding, subject to any limitations in the order granting leave to intervene, and have the opportunity to participate fully in the conduct of the hearing, including the opportunity to present evidence and cross-examine witnesses. Since the Commission has made a final determination that the amendment involves no significant hazards consideration, if a hearing is requested, it will not stay the effectiveness of the amendment. Any hearing held would take place while the amendment is in effect.

A request for a hearing or a petition for leave to intervene must be filed with the Secretary of the Commission, U.S. Nuclear Regulatory Commission, Washington, DC 20555–0001, Attention: Rulemakings and Adjudications Staff or may be delivered to the Commission's Public Document Room, the Gelman Building, 2120 L Street, NW., Washington, DC, by the above date. A copy of the petition should also be sent to the Office of the General Counsel, U.S. Nuclear Regulatory Commission, Washington, DC 20555–0001, and to the attorney for the licensee.

Nontimely filings of petitions for leave to intervene, amended petitions, supplemental petitions and/or requests for a hearing will not be entertained absent a determination by the Commission, the presiding officer or the Atomic Safety and Licensing Board that the petition and/or request should be granted based upon a balancing of the factors specified in 10 CFR 2.714(a)(1)(i)–(v) and 2.714(d).

Pennsylvania Power and Light Company, Docket Nos. 50–387 and 50–388, Susquehanna Steam Electric Station, Units 1 and 2, Luzerne County, Pennsylvania

Date of application for amendments: February 5, 1998, as supplemented February 12, March 3 and 5, 1998.

Brief description of amendments: The amendments revised the surveillance requirements in Technical Specification (TS) 4.6.1.2 (Requirement a). The change to the referenced TS adds a footnote stating that the requirement for Type A testing will not apply to certain instrument line penetrations.

Date of issuance: March 10, 1998.

Effective date: Both units, as of the date of issuance.

Amendment Nos.: 173 and 146.

Facility Operating License Nos. NPF–14 and NPF–22: The amendments revised the Technical Specifications.

Public comments requested as to proposed no significant hazards consideration: No. On February 5, 1998, the staff issued a Notice of Enforcement Discretion, which was immediately effective and remained in effect until this amendment was issued.

The Commission's related evaluation of the amendments, finding of emergency circumstances, consultation with the State of Pennsylvania, and final no significant hazards consideration determination are contained in a Safety Evaluation dated March 10, 1998.

Local Public Document Room location: Osterhout Free Library, Reference Department, 71 South Franklin Street, Wilkes-Barre, PA 18701.

Attorney for licensee: Jay Silberg, Esquire, Shaw, Pittman, Potts and Trowbridge, 2300 N Street NW., Washington, DC 20037.

NRC Project Director: John F. Stolz.

Dated at Rockville, Maryland, this 18th day of March 1998.

For the Nuclear Regulatory Commission.

Elinor G. Adensam,

Acting Director, Division of Reactor Projects—III/IV, Office of Nuclear Reactor Regulation.

[FR Doc. 98–7652 Filed 3–24–98; 8:45 am]

BILLING CODE 7590–01–P

NUCLEAR REGULATORY COMMISSION

Privacy Act of 1974, As Amended; Revisions to System of Records

AGENCY: Nuclear Regulatory Commission.

ACTION: System of records; proposed revisions.

SUMMARY: In accordance with the Privacy Act of 1974, as amended (Privacy Act), the Nuclear Regulatory Commission (NRC) is proposing to amend the notice describing the system of records (system) currently entitled NRC–32, ''Office of the Controller Financial Transactions and Debt Collection Management Records—NRC,'' by adding five new routine uses and revising five existing routine uses in order to permit NRC to comply with certain provisions of the Debt Collection Improvement Act of 1996 (DCIA), Public Law 104–134. The system notice was last published in the **Federal Register** on April 17, 1996.

EFFECTIVE DATE: The revised system of records will become effective without further notice on May 4, 1998, unless comments received on or before that date cause a contrary decision. If changes are made based on NRC's review of comments received, a new final notice will be published.

ADDRESSES: Send comments to the Secretary of the Commission, U.S. Nuclear Regulatory Commission, Washington, DC 20555–0001, Attention: Rulemakings and Adjudications staff. Hand deliver comments to 11555 Rockville Pike, Rockville, Maryland, between 7:30 a.m. and 4:15 p.m. Federal workdays. Copies of comments received may be examined, or copied for a fee, at the NRC Public Document Room at 2120 L Street, NW., Lower Level, Washington, DC.

FOR FURTHER INFORMATION CONTACT: Jona L. Souder, Freedom of Information Act/Privacy Act Section, Information Services Branch, Information Management Division, Office of the Chief Information Officer, U.S. Nuclear Regulatory Commission, Washington, DC 20555–0001, telephone: 301–415–7170.

SUPPLEMENTARY INFORMATION:

The DCIA contains various provisions intended to maximize the collection of delinquent debts, minimize the costs of debt collection, reduce losses arising from debt management activities, rely on the experience and expertise of private sector professionals to provide debt collection services to Federal agencies, and ensure that the public is fully informed of the Federal government's debt collection policies and that debtors are cognizant of their financial obligations to repay amounts owed to the government and have all appropriate due process rights.

The proposed revisions to NRC–32 will permit NRC to implement several new techniques for collecting debts and claims authorized or required by the DCIA. New routine use I. will permit NRC to refer nontax debts over 180 days delinquent to the Department of the Treasury (Treasury) for administrative offset against payments due elsewhere in the government under the mandatory, government-wide Treasury Offset Program (TOP). TOP provides a single source for identifying delinquent debtors receiving government funds and, to the extent legally allowed, offsetting the delinquent debts using those same funds. New routine use m. will enable NRC to publicly disseminate the names of certain delinquent debtors and the existence of the debts for debt collection purposes. New routine use n. will enable NRC to match certain debtor records with the Department of Health and Human Services and the Department of Labor to obtain Taxpayer Identification Numbers required by the DCIA for each person doing business with Federal agencies. New routine uses o. and p. will permit NRC to disclose information if it decides or is required

to sell delinquent nontax debts and to report information on collateralized debts to Congress pursuant to 37 U.S.C. 3711(i). Revised routine use b. will permit NRC to participate in a required program to annually match delinquent debt records due all agencies with records of Federal employees to identify those employees delinquent in repayment of certain nontax debts. Revised routine use d. will permit NRC to report current (not delinquent) and delinquent commercial and consumer nontax debt to credit bureaus for use in the administration of debt collection and to report delinquent debt information to the Office of Housing and Urban Development's Credit Alert Interactive Voice Response System. Routine uses e., h., and k. are revised to enable NRC to garnish non-Federal wages of certain delinquent debtors, to provide certain information on discharged debts to Treasury for reporting to the IRS, and to transfer to Treasury or approved Debt Collection Centers certain nontax debts over 180 days delinquent for further collection action. Current routine uses l., m., and n. are redesignated q., r., and s., respectively.

Other minor changes to the system notice for NRC–32 are also being made at this time and include renaming the system ''Office of the Chief Financial Officer Financial Transactions and Debt Management Records—NRC'' because of an agency reorganization, adding the DCIA and the Federal Claims Collection Standards to the Authority section of the notice, and updating the System Manager's title and the Notification Procedures.

A report on the proposed revisions to NRC–32 is being sent to the Office of Management and Budget (OMB), the Committee on Governmental Affairs of the U.S. Senate, and the Committee on Government Reform and Oversight of the U.S. House of Representatives as required by the Privacy Act and OMB Circular No. A–130, Appendix I, ''Federal Agency Responsibilities for Maintaining Records About Individuals.''

Accordingly, NRC proposes to amend the system notice for NRC–32 in its entirety to read as follows:

NRC–32

SYSTEM NAME:

Office of the Chief Financial Officer Financial Transactions and Debt Collection Management Records—NRC.

SYSTEM LOCATION:

Primary system—Office of the Chief Financial Officer, NRC, 11545 Rockville Pike, Rockville, Maryland.

Duplicate systems—Duplicate systems exist, in whole or in part, at the locations listed in Addendum I, Parts 1 and 2. Other NRC systems of records contain payment and/or collection transaction records and background information that may duplicate some of the records in this system. These other systems include, but are not limited to:

NRC–5, Contracts Records Files—NRC;
NRC–7, Telephone Call Detail Records—NRC;
NRC–10, Freedom of Information Act (FOIA) and Privacy Act (PA) Requests—NRC;
NRC–18, Office of the Inspector General Investigative Records—NRC;
NRC–19, Official Personnel Training Records Files—NRC;
NRC–20, Official Travel Records—NRC;
NRC–21, Payroll Accounting Records—NRC;
NRC–24, Government Property Accountability System—NRC; and
NRC–41, Tort Claims and Personal Property Claims—NRC.

CATEGORIES OF INDIVIDUALS COVERED BY THE SYSTEM:

Individuals the NRC owes/owed money to or who receive/received a payment from NRC and those who owe/owed money to the United States. Individuals receiving payments include, but are not limited to, current and former employees, contractors, consultants, vendors, and others who travel or perform certain services for NRC. Individuals owing money include, but are not limited to, those who have received goods or services from NRC for which there is a charge or fee (NRC licensees, applicants for NRC licenses, Freedom of Information Act requesters, etc.) and those who have been overpaid and owe NRC a refund (current and former employees, contractors, consultants, vendors, etc.).

CATEGORIES OF RECORDS IN THE SYSTEM:

Information in the system includes, but is not limited to, names, addresses, telephone numbers, Social Security Numbers (SSN), Taxpayer Identification Numbers (TIN), Individual Taxpayer Identification Numbers (ITIN), fee categories, application and license numbers, contract numbers, vendor numbers, amounts owed, background and supporting documentation, correspondence concerning claims and debts, credit reports, and billing and payment histories. The overall agency accounting system contains data and information integrating accounting functions such as general ledger, funds control, travel, accounts receivable, accounts payable, equipment, and appropriation of funds. Although this system of records contains information on corporations and other business entities, only those records that contain information about individuals that is retrieved by the individual's name or other personal identifier are subject to the Privacy Act.

AUTHORITY FOR MAINTENANCE OF THE SYSTEM:

5 U.S.C. 552a(b)(12); 5 U.S.C. 5514; 15 U.S.C. 1681a(f); 26 U.S.C. 6103(m)(2); 31 U.S.C. 37, subchapters I and II; 31 U.S.C. 3701(a)(3) (1994); 31 U.S.C. 3711; 31 U.S.C. 3716; 31 U.S.C. 3717; 31 U.S.C. 3718; 31 U.S.C. 3720A (1994); 42 U.S.C. 2201; 42 U.S.C. 5841 (1994); Cash Management Improvement Act Amendments of 1992 (Pub. L. 102–589); Debt Collection Improvement Act of 1996 (Pub. L. 104–134); 4 CFR parts 101–105; 10 CFR parts 15, 16, 170, 171 (1997); Executive Order 9397, November 22, 1943; section 201 of Executive Order 11222.

ROUTINE USES OF RECORDS MAINTAINED IN THE SYSTEM, INCLUDING CATEGORIES OF USERS AND THE PURPOSES OF SUCH USES:

In addition to the disclosures permitted under subsection (b) of the Privacy Act, the NRC may disclose information contained in this system of records without the consent of the subject individual if the disclosure is compatible with the purpose for which the record was collected under the following routine uses:

a. To debt collection contractors (31 U.S.C. 3718) or to other Federal agencies such as the Department of the Treasury (Treasury) for the purpose of collecting and reporting on delinquent debts as authorized by the Debt Collection Act of 1982 or the Debt Collection Improvement Act of 1996;

b. To Treasury; the Defense Manpower Data Center, Department of Defense; the United States Postal Service; government corporations; or any other Federal, State, or local agency to conduct an authorized computer matching program in compliance with the Privacy Act of 1974, as amended, to identify and locate individuals, including Federal employees, who are delinquent in their repayment of certain debts owed to the U.S. Government, including those incurred under certain programs or services administered by the NRC, in order to collect debts under common law or under the provisions of the Debt Collection Act of 1982 or the Debt Collection Improvement Act of 1996 which include by voluntary repayment, administrative or salary offset, and referral to debt collection contractors.

c. To the Department of Justice, United States Attorney, Treasury, or

other Federal agencies for further collection action on any delinquent account when circumstances warrant.

d. To credit reporting agencies/credit bureaus for the purpose of either adding to a credit history file or obtaining a credit history file or comparable credit information for use in the administration of debt collection. As authorized by the DCIA, NRC may report current (not delinquent) as well as delinquent consumer and commercial debt to these entities in order to aid in the collection of debts, typically by providing an incentive to the person to repay the debt timely. Proposed revisions to the Federal Claims Collection Standards (FCCS) published in the **Federal Register** on December 31, 1997, direct agencies to report information on delinquent debts to the Department of Housing and Urban Development's Credit Alert Interactive Voice Response System (CAIVRS). NRC will report this information to CAIVRS if this requirement is contained in the final rule amending the FCCS.

e. To any Federal agency where the debtor is employed or receiving some form of remuneration for the purpose of enabling that agency to collect a debt owed the Federal government on NRC's behalf by counseling the debtor for voluntary repayment or by initiating administrative or salary offset procedures, or other authorized debt collection methods under the provisions of the Debt Collection Act of 1982 or the Debt Collection Improvement Act of 1996. Pursuant to the DCIA, NRC may garnish non-Federal wages of certain delinquent debtors so long as required due process procedures are followed. In these instances, NRC's notice to the employer will disclose only the information that may be necessary for the employer to comply with the withholding order.

f. To the Internal Revenue Service (IRS) by computer matching to obtain the mailing address of a taxpayer for the purpose of locating such taxpayer to collect or to compromise a Federal claim by NRC against the taxpayer pursuant to 26 U.S.C. 6103(m)(2) and in accordance with 31 U.S.C. 3711, 3717, and 3718 or common law. Redisclosure of a mailing address obtained from the IRS may be made only for debt collection purposes, including to a debt collection agent to facilitate the collection or compromise of a Federal claim under the Debt Collection Act of 1982 or the Debt Collection Improvement Act of 1996, except that redisclosure of a mailing address to a reporting agency is for the limited purpose of obtaining a credit report on the particular taxpayer. Any mailing address information obtained from the IRS will not be used or shared for any other NRC purpose or disclosed by NRC to another Federal, State, or local agency which seeks to locate the same taxpayer for its own debt collection purposes.

g. To refer legally enforceable debts to the IRS or to Treasury's Debt Management Services to be offset against the debtor's tax refunds under the Federal Tax Refund Offset Program.

h. To prepare W–2, 1099, or other forms or electronic submittals, to forward to the IRS and applicable State and local governments for tax reporting purposes. Under the provisions of the DCIA, NRC is permitted to provide Treasury with Form 1099–C information on discharged debts so that Treasury may file the form on NRC's behalf with the IRS. W–2 and 1099 Forms contain information on items to be considered as income to an individual, including certain travel related payments to employees, payments made to persons not treated as employees (e.g., fees to consultants and experts), and amounts written-off as legally or administratively uncollectible, in whole or in part.

i. To banks enrolled in the Treasury Credit Card Network to collect a payment or debt when the individual has given his or her credit card number for this purpose.

j. To another Federal agency that has asked the NRC to effect an administrative offset under common law or under 31 U.S.C. 3716 to help collect a debt owed the United States. Disclosure under this routine use is limited to name, address, SSN, TIN, ITIN, and other information necessary to identify the individual; information about the money payable to or held for the individual; and other information concerning the administrative offset.

k. To Treasury or other Federal agencies with whom NRC has entered into an agreement establishing the terms and conditions for debt collection cross servicing operations on behalf of the NRC to satisfy, in whole or in part, debts owed to the U.S. government. Cross servicing includes the possible use of all debt collection tools such as administrative offset, tax refund offset, referral to debt collection contractors, and referral to the Department of Justice. The DCIA requires agencies to transfer to Treasury or Treasury-designated Debt Collection Centers for cross servicing certain nontax debt over 180 days delinquent. Treasury has the authority to act in the Federal government's best interest to service, collect, compromise, suspend, or terminate collection action in accordance with existing laws under which the debts arise.

l. Information on past due, legally enforceable nontax debts more than 180 days delinquent will be referred to Treasury for the purpose of locating the debtor and/or effecting administrative offset against monies payable by the government to the debtor, or held by the government for the debtor under the DCIA's mandatory, government-wide Treasury Offset Program (TOP). Under TOP, Treasury maintains a database of all qualified delinquent nontax debts, and works with agencies to match by computer their payments against the delinquent debtor database in order to divert payments to pay the delinquent debt. Treasury has the authority to waive the computer matching requirement for NRC and other agencies upon written certification that administrative due process notice requirements have been complied with.

m. For debt collection purposes, NRC may publish or otherwise publicly disseminate information regarding the identity of delinquent nontax debtors and the existence of the nontax debts under the provisions of the Debt Collection Improvement Act of 1996.

n. To the Department of Labor (DOL) and the Department of Health and Human Services (HHS) to conduct an authorized computer matching program in compliance with the Privacy Act of 1974, as amended, to match NRC's debtor records with records of DOL and HHS to obtain names, name controls, names of employers, addresses, dates of birth, and TINs. The DCIA requires all Federal agencies to obtain taxpayer identification numbers from each individual or entity doing business with the agency, including applicants and recipients of licenses, grants, or benefit payments; contractors; and entities and individuals owing fines, fees, or penalties to the agency. NRC will use TINs in collecting and reporting any delinquent amounts resulting from the activity and in making payments.

o. If NRC decides or is required to sell a delinquent nontax debt pursuant to 31 U.S.C. 3711(i), information in this system of records may be disclosed to purchasers, potential purchasers, and contractors engaged to assist in the sale or to obtain information necessary for potential purchasers to formulate bids and information necessary for purchasers to pursue collection remedies.

p. If NRC has current and delinquent collateralized nontax debts pursuant to 31 U.S.C. 3711(i)(4)(A), certain information in this system of records on its portfolio of loans, notes and guarantees, and other collateralized debts will be reported to Congress based on standards developed by the Office of

Management and Budget, in consultation with Treasury.

q. To Treasury in order to request a payment to individuals owed money by the NRC.

r. To the National Archives and Records Administration or to the General Services Administration for records management inspections conducted under 44 U.S.C. 2904 and 2906.

s. For any of the routine uses specified in the Prefatory Statement of General Routine Uses.

DISCLOSURES TO CONSUMER REPORTING AGENCIES:

Disclosures pursuant to 5 U.S.C. 552a(b)(12): Disclosures of information to a consumer reporting agency are not considered a routine use of records. Disclosures may be made from this system to ''consumer reporting agencies'' as defined in the Fair Credit Reporting Act (15 U.S.C. 1681(a)(f)) or the Federal Claims Collection Act of 1966, as amended (31 U.S.C. 3701(a)(3)).

POLICIES AND PRACTICES FOR STORING, RETRIEVING, ACCESSING, RETAINING, AND DISPOSING OF RECORDS IN THE SYSTEM:

STORAGE:

Information in this system is stored on paper and microfiche, and in computer media.

RETRIEVABILITY:

Information is retrieved a number of ways, including by name, SSN, TIN, license or application number, contract or purchase order number, invoice number, voucher number, and vendor code.

SAFEGUARDS:

Records in the primary system are maintained in a building where access is controlled by a security guard force. Records are kept in lockable file rooms or at user's workstations in an area where access is controlled by keycard and is limited to NRC and contractor personnel who need the records to perform their official duties. The records are under visual control during duty hours. Access to automated data requires use of proper password and user identification codes by NRC or contractor personnel.

RETENTION AND DISPOSAL:

Paper records are destroyed when six years and three months old in accordance with GRS 6–1.a except that administrative claims files, for which collection action is terminated without extension, are destroyed when ten years and three months old in accordance with GRS 6–10.b. Computer files are deleted after the expiration of the retention period authorized under the GRS for the disposable hard copy file or when no longer needed, whichever is later.

SYSTEM MANAGER(S) AND ADDRESS:

Director, Division of Accounting and Finance, Office of the Chief Financial Officer, U.S. Nuclear Regulatory Commission, Washington, DC 20555–0001.

NOTIFICATION PROCEDURES:

Individuals seeking to determine whether this system of records contains information pertaining to themselves should write to the Freedom of Information Act and Privacy Act Officer, Office of the Chief Information Officer, U.S. Nuclear Regulatory Commission, Washington, DC 20555–0001, and comply with the procedures contained in NRC's Privacy Act regulations, 10 CFR part 9.

RECORD ACCESS PROCEDURES:

Same as ''Notification Procedures.''

CONTESTING RECORD PROCEDURES:

Same as ''Notification Procedures.''

RECORD SOURCE CATEGORIES:

Record source categories include, but are not limited to, individuals covered by the system, their attorneys, or other representatives; NRC; collection agencies or contractors; employing agencies of debtors; and Federal, State and local agencies.

SYSTEMS EXEMPTED FROM CERTAIN PROVISIONS OF THE ACT:

None.

Dated at Rockville, MD, this 19th day of March 1998.

For the Nuclear Regulatory Commission.

A.J. Galante,

Chief Information Officer.

[FR Doc. 98–7811 Filed 3–20–98; 8:45 am]

BILLING CODE 7590–01–P

SECURITIES AND EXCHANGE COMMISSION

Sunshine Act Meeting

Notice is hereby given, pursuant to the provisions of the Government in the Sunshine Act, Pub. L. 94–409, that the Securities and Exchange Commission will hold the following meeting during the week of March 23, 1998.

A closed meeting will be held on Thursday, March 26, 1998, at 10:00 a.m.

Commissioners, Counsel to the Commissioners, the Secretary to the Commission, and recording secretaries will attend the closed meeting. Certain staff members who have an interest in the matters may also be present.

The General Counsel of the Commission, or his designee, has certified that, in his opinion, one or more of the exemptions set forth in 5 U.S.C. 552b(c)(4), (8), (9)(A) and (10) and 17 CFR 200.402(a)(4), (8), (9)(i) and (10), permit consideration of the scheduled matters at the closed meeting.

Commissioner Johnson, as duty officer, voted to consider the items listed for the closed meeting in a closed session.

The subject matter of the closed meeting scheduled for Thursday, March 26, 1998, will be:

Institution of injunctive actions.

Institution of administrative proceedings of an enforcement nature.

At times, changes in Commission priorities require alterations in the scheduling of meeting items. For further information and to ascertain what, if any, matters have been added, deleted or postponed, please contact: The Office of the Secretary at (202) 942–7070.

Dated: March 20, 1998.

Jonathan G. Katz,

Secretary.

[FR Doc. 98–7916 Filed 3–23–98; 11:25 am]

BILLING CODE 8010–01–M

SMALL BUSINESS ADMINISTRATION

[License No. 04/04–0271]

BB&T Capital Partners, LLC; Notice of Issuance of a Small Business Investment Company License

On December 9, 1997, an application was filed by BB&T Capital Partners, LLC, 200 West Second Street, 4th Floor, Winston-Salem, NC 27101 with the Small Business Administration (SBA) in accordance with 107.300 of the Regulations governing small business investment companies (13 CFR 107.300 1996) for a license to operate as a small business investment company. Notice is hereby given that, pursuant to Section 301 (c) of the Small Business Investment Act of 1958, as amended, after having considered the application and all other pertinent information, SBA issued License No. 04/04–0271 on February 26, 1998 to BB&T Capital Partners, LLC to operate as a small business investment company.

(Catalog of Federal Domestic Assistance Program No. 59.011, Small Business Investment Companies)

Dated: March 19, 1998.

Don A. Christensen,

Associate Administrator for Investment.

[FR Doc. 98–7689 Filed 3–24–98; 8:45 am]

BILLING CODE 8025–01–P

SMALL BUSINESS ADMINISTRATION

[License No. 01/71–0368]

New England Partners Capital, L.P.; Notice of Issuance of a Small Business Investment Company License

On October 22, 1997, an application was filed by New England Partners Capital , L.P., One Boston Place, Suite 2100, Boston, Massachusetts 02108 with the Small Business Administration (SBA) in accordance with § 107.300 of the Regulations governing small business investment companies (13 CFR 107.300 1996) for a license to operate as a small business investment company. Notice is hereby given that, pursuant to Section 301 (c) of the Small Business Investment Act of 1958, as amended, after having considered the application and all other pertinent information, SBA issued License No. 01/71–0368 on February 26, 1998 to New England Partners Capital, L.P. to operate as a small business investment company.

(Catalog of Federal Domestic Assistance Program No. 59.011, Small Business Investment Companies)

Dated: March 19, 1998.

Don A. Christensen,

Associate Administrator for Investment.

[FR Doc. 98–7688 Filed 3–24–98; 8:45 am]

BILLING CODE 8025–01–P

SMALL BUSINESS ADMINISTRATION

[License No. 08/78–0151]

Utah Ventures II, L.P.; Notice of Issuance of a Small Business Investment Company License

On October 22, 1997, an application was filed by Utah Ventures II, L.P., at 423 Wakara Way, Suite 206, Salt Lake City, Utah 84108, with the Small Business Administration (SBA) pursuant to § 107.300 of the Regulations governing small business investment companies (13 CFR 107.300 (1996)) for a license to operate as a small business investment company.

Notice is hereby given that, pursuant to Section 301(c) of the Small Business Investment Act of 1958, as amended, after having considered the application and all other pertinent information, SBA issued License No. 08/78–0151 on December 31, 1997, to Utah Ventures II, L.P. to operate as a small business investment company.

(Catalog of Federal Domestic Assistance Program No. 59.011, Small Business Investment Companies)

Dated: March 17, 1998.

Don A. Christensen,

Associate Administrator for Investment.

[FR Doc. 98–7690 Filed 3–24–98; 8:45 am]

BILLING CODE 8025–01–P

DEPARTMENT OF STATE

[Public Notice 2769]

Agency Information Collection Activities: Proposed Collection; Comment Request

AGENCY: Bureau of Finance and Management Policy, Department of State.

ACTION: 60-Day notice of proposed information collection; client satisfaction survey.

SUMMARY: The Department of State is seeking Office of Management and Budget (OMB) approval for the information collection described below. The purpose of this notice is to allow 60 days for public comment in the **Federal Register** preceding submission to OMB. This process is conducted in accordance with the Paperwork Reduction Act of 1995.

The following summarizes the information collection proposal submitted to OMB:

Type of Request: New Collection.

Originating Office: Bureau of Finance and Management Policy.

Title of Information Collection: Client Satisfaction Survey.

Frequency: Annually.

Form Number: None.

Respondents: Foreign Service annuitants.

Estimated Number of Respondents: 3,000.

Average Hours Per Response: 30 minutes.

Total Estimated Burden: 1,500.

Public comments are being solicited to permit the agency to—

- Evaluate whether the proposed information collection is necessary for the proper performance of the agency functions.
- Evaluate the accuracy of the agency's estimate of the burden of the proposed collection.
- Enhance the quality, utility, and clarity of the information to be collected.
- Minimize the reporting burden on those who are to respond, including through the use of automated collection techniques or other forms of technology.

FOR FURTHER INFORMATION CONTACT: Comment regarding the collection listed in this notice or requests for copies of the proposed collection and supporting documents should be directed to Charles S. Cunningham, Directives Management Branch, U.S. Department of State, Washington, DC 20520, (202) 647–0596.

Dated: March 16, 1998.

Glen H. Johnson,

Acting Chief Information Officer.

[FR Doc. 98–7764 Filed 3–24–98; 8:45 am]

BILLING CODE 4710–01–M

DEPARTMENT OF STATE

[Public Notice #2772]

Ad Hoc on Administrative Preparations for the 1998 ITU Plenipotentiary Conference International Telecommunications Advisory Committee (ITAC); Meeting

The Department of State announces a meeting, under the United States International Telecommunications Advisory Committee (ITAC), of its Ad Hoc Group on Administrative Preparations for the 1998 International Telecommunication Union (ITU) Plenipotentiary Conference, to be hosted by the United States in Minneapolis, Minnesota in October/November 1998. The meeting will be held April 8, 1998, at 1:30–3 p.m., in Room 1207 of the Department of State, 2201 ''C'' Street, N.W., Washington, D.C.

The purpose of the upcoming meeting is to provide a comprehensive briefing on administrative preparations for the 1998 ITU Plenipotentiary Conference.

Members of the general public may attend the meetings and join in the discussions, subject to the instructions of the chair. In this regard, entry to the building is controlled. If you wish to attend, please send a fax to 202–647–5957 not later than 24 hours before the scheduled meeting and include the name of the meeting, your name, affiliation, social security number and date of birth. One of the following valid photo ID's will be required for admittance: U.S. driver's license with picture, U.S. passport, or U.S. government ID (company ID's are no longer accepted by Diplomatic Security). Enter from the ''C'' Street Main Lobby.

Dated: March 18, 1998

Richard E. Shrum,

Deputy Committee Coordinator for International Communications Information Technology.

[FR Doc. 98–7685 Filed 3–24–98; 8:45 am]

BILLING CODE 4710–45–M

DEPARTMENT OF STATE

[Public Notice #2767]

Determination on U.S. Bilateral Assistance to the Republika Srpska

Pursuant to the authority vested in me by section 573(e) of the Foreign Operations, Export Financing, and Related Programs Appropriations Act, 1998, Pub. L. 105–118 (''FOAA''), I hereby waive the application of section 573(a) of the FOAA to provide $5 million in Economic Support Funds as budget support to the new Government of the Republika Srpska.

I hereby determine that this U.S. bilateral assistance program directly supports the implementation of the Dayton Agreement and its Annexes.

This Determination shall be published in the **Federal Register**.

Dated: March 12, 1998.

Madeleine Albright,

Secretary of State.

[FR Doc. 98–7763 Filed 3–24–98; 8:45 am]

BILLING CODE 4710–10–M

DEPARTMENT OF STATE

[Public Notice #2766]

Determination on U.S. Bilateral Assistance to the Federal Republic of Yugoslavia

Pursuant to the authority vested in me by the section 573(e) of the Foreign Operations, Export Financing, and Related Programs Appropriations Act, 1998, Pub. L. 105–118 (''FOAA''), I hereby waive the application of section 573(a) of the FOAA with regard to the following U.S. bilateral assistance programs in the Federal Republic of Yugoslavia (FRY): USAID and USIA-funded programs and projects to support democratic reform, including free and independent media and labor in the FRY; tension-reducing activities in Kosovo; and economic reform in Montenegro.

I hereby determine that these U.S. bilateral assistance programs directly support the implementation of the Dayton Agreement and its Annexes.

This Determination shall be published in the **Federal Register**.

Dated: March 2, 1998.

Madeleine Albright,

Secretary of State.

[FR Doc. 98–7762 Filed 3–24–98; 8:45 am]

BILLING CODE 4710–10–M

DEPARTMENT OF TRANSPORTATION

Surface Transportation Board

[STB Ex Parte No. 290 (Sub No. 5) (98–2)]

Quarterly Rail Cost Adjustment Factor

AGENCY: Surface Transportation Board.

ACTION: Approval of rail cost adjustment factor.

SUMMARY: The Board has approved the second quarter 1998 rail cost adjustment factor (RCAF) and cost index filed by the Association of American Railroads. The second quarter 1998 RCAF (Unadjusted) is 0.996. The second quarter 1998 RCAF (Adjusted) is 0.642. The second quarter 1998 RCAF–5 is 0.632.

EFFECTIVE DATE: April 1, 1998.

FOR FURTHER INFORMATION CONTACT: H. Jeff Warren, (202) 565–1549. TDD for the hearing impaired: (202) 565–1695.

SUPPLEMENTARY INFORMATION: Additional information is contained in the Board's decision. To purchase a copy of the full decision, write to, call, or pick up in person from: DC NEWS & DATA, INC., Suite 210, 1925 K Street, NW, Washington, DC 20423–0001, telephone (202) 289–4357. [Assistance for the hearing impaired is available through TDD services (202) 565–1695.]

This action will not significantly affect either the quality of the human environment or energy conservation.

Pursuant to 5 U.S.C. 605(b), we conclude that our action will not have a significant economic impact on a substantial number of small entities within the meaning of the Regulatory Flexibility Act.

Decided: March 19, 1998.

By the Board, Chairman Morgan and Vice Chairman Owen.

Vernon A. Williams,

Secretary.

[FR Doc. 98–7753 Filed 3–24–98; 8:45 am]

BILLING CODE 4915–00–P

DEPARTMENT OF THE TREASURY

[Treasury Order 102–20]

Delegation of Authority Concerning the Information Security Program

Dated: March 19, 1998.

Pursuant to the authority vested in the Secretary of the Treasury, including the authority vested by 31 U.S.C. 321(b) and Executive Order (E.O.) 12958, ''Classified National Security Information,'' dated April 17, 1995, as amended, it is ordered that:

1. The Department shall maintain an information security program to fulfill the responsibilities imposed by E.O. 12958, under which national security information is to be classified, safeguarded and declassified. The program shall be applicable throughout the Department.

2. The Assistant Secretary for Management and Chief Financial Officer is delegated the authority of the Secretary to exercise and perform all duties, rights, powers, and obligations under the above-referenced authority, except for any matter in which, by law, executive order, or regulation of outside agencies, the personal decision of the head of the agency or the principal deputy is required. This delegation includes issuing any regulations required to implement the Department's information security program.

3. The Assistant Secretary for Management and Chief Financial Officer is designated as the Department's senior agency official under Section 5.6(c) of E.O. 12958, with authority to direct and administer Treasury's information security program. The Assistant Secretary for Management and Chief Financial Officer shall ensure that the functions listed in Section 5.6(c) of E.O. 12958 are carried out.

4. The authority to classify information is delegated in Treasury Order (TO) 102–19, and this Order does not modify the provisions of TO 102–19.

5. The responsibilities of the Special Assistant to the Secretary (National Security) with respect to National Foreign Intelligence Information continue uninterrupted and are not affected by this Order.

6. The authority delegated by this order may be redelegated.

Robert E. Rubin,

Secretary of the Treasury.

[FR Doc. 98–7681 Filed 3–24–98; 8:45 am]

BILLING CODE 4810–40–P

DEPARTMENT OF THE TREASURY

[Treasury Order Number 102–19]

Delegation of Original and Derivative Classification Authority

March 19, 1998.

Pursuant to the authority vested in the Secretary of the Treasury, including the authority in 31 U.S.C. 321(b); Sections 1.4 and 2.2 of Executive Order (E.O.) 12958, ''Classified National Security Information,'' dated April 20, 1995, as amended; and the President's memorandum dated October 13, 1995 (60 FR 53845); the following delegations are made with respect to the

classification of national security information.

1. *Original Classification Authority*. The following officials are delegated original classification authority as indicated.

Original Top Secret

Deputy Secretary
Under Secretary (International Affairs)
Under Secretary (Enforcement)
Assistant Secretary for Management and CFO
Assistant Secretary (International Affairs)
Assistant Secretary (Enforcement)
Special Assistant to the Secretary (National Security)
Commissioner of Customs
Director, United States Secret Service
Director, Bureau of Alcohol, Tobacco and Firearms
Director, Office of Security

Original Secret and Confidential

Under Secretary (Domestic Finance)
General Counsel
Assistant Secretary (Economic Policy)
Inspector General
Director, Bureau of Engraving and Printing

2. The authority delegated in paragraph 1. inheres within the office and may be exercised by a person acting in that capacity.

3. *Redelegation*. Pursuant to E.O. 12958, only the Secretary of the Treasury may delegate the authority to originally classify national security information as Top Secret; only the Secretary or the Department's senior agency official for the information security program (designated in Treasury Order 102–20) may delegate original Secret or Confidential classification authority. The senior agency official is hereby authorized to redelegate original Secret or Confidential classification authority in conformity with the requirements of E.O. 12958.

3. *Derivative Classification Authority*. An official with original classification authority may derivatively classify and delegate derivative classification authority, but only at the same or lower level as the official's original authority.

4. The General Counsel and Executive Secretary are delegated derivative classification authority at the Top Secret level. The following officials are delegated derivative classification authority at the Secret and Confidential levels.

Derivative Secret and Confidential

Assistant Secretary (Financial Markets)
Assistant Secretary (Tax Policy)
Commissioner of Internal Revenue
Commissioner, Financial Management Service
Commissioner, Bureau of the Public Debt
Comptroller of the Currency
Director, Federal Law Enforcement Training Center
Director, United States Mint
Director, Office of Thrift Supervision

5. Derivative classification authority inheres within the office and may be exercised by a person acting in that capacity, and may be redelegated.

Robert E. Rubin,

Secretary of the Treasury.

[FR Doc. 98–7682 Filed 3–24–98; 8:45 am]

BILLING CODE 4810–25–P

Corrections

Federal Register

Vol. 63, No. 57

Wednesday, March 25, 1998

This section of the FEDERAL REGISTER contains editorial corrections of previously published Presidential, Rule, Proposed Rule, and Notice documents. These corrections are prepared by the Office of the Federal Register. Agency prepared corrections are issued as signed documents and appear in the appropriate document categories elsewhere in the issue.

DEPARTMENT OF COMMERCE

Foreign-Trade Zones Board

[Docket 11-98]

Foreign-Trade Zone 147- Reading, Pennsylvania; Application for Foreign-Trade Subzone Status: Bayer Corporation (Aspirin Products), Myerstown, Pennsylvania

Correction

In notice document 98–6563 appearing on page 12440, in the issue of Friday, March 13, 1998, make the following correction:

On page 12440, in the second column, in the second full paragraph, in the seventh line, '' May 21, 1998'' should read ''May 12, 1998''.

BILLING CODE 1505-01-D

DEPARTMENT OF HEALTH AND HUMAN SERVICES

Centers for Disease Control and Prevention

Notice of Availability of Annual Reports

Correction

In notice document 98–5665 appearing on page 10918, in the issue of Thursday, March 5, 1998, make the following correction:

On page 10918, in the first column, in the ninth line, ''Advisory Committee for Injury Prevention and Control Injury Research Grant Review Committee'' should read

''Advisory Committee for Injury Prevention and Control

Injury Research Grant Review Committee''

BILLING CODE 1505-01-D

federal register

Wednesday
March 25, 1998

Part II

Department of Health and Human Services

Health Care Financing Administration

42 CFR Parts 401, 403, et al.

Medicare Program; ''Without Fault'' and Waiver of Recovery From an Individual as It Applies to Medicare Overpayment Liability; Proposed Rule

DEPARTMENT OF HEALTH AND HUMAN SERVICES

Health Care Financing Administration

42 CFR Parts 401, 403, 405, 410, 411, 413, 447, 466, 473, and 493

[HCFA–1719–P]

RIN: 0938–AD95

Medicare Program; ''Without Fault'' and Waiver of Recovery from an Individual as it Applies to Medicare Overpayment Liability

AGENCY: Health Care Financing Administration (HCFA), HHS.

ACTION: Proposed rule.

SUMMARY: This rule would amend the Medicare regulations governing liability for overpayments to eliminate application of certain regulations of the Social Security Administration and to replace them with HCFA regulations more specific to circumstances involving Medicare overpayments. The following specific changes are included in this rule.

Explicit criteria and the circumstances under which a provider or supplier can be relieved of liability for an overpayment on the basis of being ''without fault'' with respect to the overpayment.

Specific criteria and circumstances of the conditions under which a waiver of recovery for Medicare overpayments would apply to individuals.

A provision to ordinarily consider it inequitable to recover an overpayment from a without-fault individual when an overpayment is made to a without-fault provider.

Specific provisions that enable Medicare intermediaries and carriers to determine without fault in Medicare overpayments resulting from Medicare secondary payer conditional payments.

Provisions that grant Peer Review Organizations the authority to make without-fault determinations.

Provisions for an administrative appeals process for providers and suppliers with regard to a ''not-without-fault'' determination.

We expect this rule would prevent some providers and suppliers from claiming without-fault status. This could reduce the number of overpayment liabilities passed on to individuals and result in a slight increase in the amount of money recovered.

DATES: To ensure consideration, comments must be mailed or delivered to the appropriate address, as provided below, and be received by 5 p.m. on May 26, 1998.

ADDRESSES: Mail written comments (1 original and 3 copies) to the following address: Health Care Financing Administration, Department of Health and Human Services, Attention: HCFA–1719–P, P.O. Box 26676, Baltimore, MD 21207.

If you prefer, you may deliver your written comments (1 original and 3 copies) to one of the following addresses: Room 309–G, Hubert H. Humphrey Building, 200 Independence Avenue, SW., Washington, DC 20201, or Room C5–09–26, 7500 Security Boulevard, Baltimore, MD 21244–1850.

Because of staffing and resource limitations, we cannot accept comments by facsimile (FAX) transmission. In commenting, please refer to file code HCFA–1719–P. Comments received timely will be available for public inspection as they are received, generally beginning approximately 3 weeks after publication of this document, in Room 309–G of the Department's offices at 200 Independence Avenue, SW., Washington, DC, on Monday through Friday of each week from 8:30 a.m. to 5 p.m. (phone: (202) 690–7890).

Copies: To order copies of the **Federal Register** containing this document, send your request to: New Orders, Superintendent of Documents, P.O. Box 371954, Pittsburgh, PA 15250–7954. Specify the date of the issue requested and enclose a check or money order payable to the Superintendent of Documents, or enclose your Visa or Master Card number and expiration date. Credit card orders can also be placed by calling the order desk at (202) 512–1800 or by faxing to (202) 512–2250. The cost for each copy is $8. As an alternative, you may view and photocopy the **Federal Register** document at most libraries designated as Federal Depository Libraries and at many other public and academic libraries throughout the country that receive the **Federal Register**.

FOR FURTHER INFORMATION CONTACT: David Walczak (410) 786–4475.

SUPPLEMENTARY INFORMATION:

I. Background

In any large organization that makes payments to a substantial number of individuals, providers, and suppliers, excesses in payment amounts may occur. Medicare overpayments are Medicare funds an individual, provider, or supplier has received that exceed amounts due and payable under the Medicare statute and regulations. (The Medicare rules at § 400.202 define a ''supplier'' as ''a physician or other practitioner, or an entity other than a provider, that furnishes health care services under Medicare.'' Therefore, in this preamble, we have used the term ''supplier'' to include a physician.)

Overpayments generally result when payment is made by Medicare for noncovered items or services, when payment is made that exceeds the amount allowed by Medicare for an item or service, or when payment is made for items or services that should have been paid by another insurer (Medicare secondary payer obligations). Once a determination and any necessary adjustments in the amount of the overpayment have been made, the remaining amount is a debt owed to the United States Government.

Section 1870 of the Social Security Act (the Act) provides a framework within which liability for Medicare overpayments is determined and recoupment of overpayments is pursued. This framework prescribes a certain flow of events (that is, a decisionmaking process) that must be followed when pursuing the recoupment of Medicare overpayments.

Specifically, section 1870(a) of the Act provides that a payment to a provider or a supplier is considered to be a payment to the individual who received the items or services. Therefore, all overpayments (with the exception of certain aggregate overpayments described later in this preamble) are considered to be an individual's overpayments. However, under section 1870(b) of the Act, if payment was made to a provider or supplier, Medicare looks first to recover any associated overpayment from the provider or supplier unless: (1) The provider or supplier is ''without fault'' with respect to the overpayment, or (2) the Secretary determines that the overpayment cannot be recouped from the provider or supplier. Section 1870(b) of the Act also specifies that, in the absence of evidence to the contrary, without fault is administratively presumed for a provider or supplier when an overpayment is discovered after the third calendar year following the year in which notice of the payment was sent to the provider or supplier.

In accordance with section 1870(b) of the Act, if an overpaid provider or supplier is determined to be without fault or the overpayment cannot be recouped from the provider or supplier or the individual was paid directly by the Medicare program, the individual is liable for the overpayment, and Medicare seeks recovery from the individual. In the case of an individual who is liable for an overpayment, section 1870(b) of the Act provides for recovery by adjusting cash benefits by

decreasing subsequent title II payments (social security retirement, survivors, and disability cash benefits) or railroad retirement benefits to which the individual (or other person if the individual dies before the adjustment has been completed) is entitled.

Under section 1870(c) of the Act, adjustment (or any other type of recovery of an overpayment against the individual) is waived if the individual is without fault with respect to the overpayment and if the adjustment or recovery would ''defeat the purposes of title II or title XVIII'' (Medicare Part A and Part B benefits) of the Act or would be ''against equity and good conscience.'' Section 1870(c) of the Act also specifies that adjustment or recovery is deemed to be against equity and good conscience if the overpayment resulted from expenses incurred for items or services for which payment may not be made under Medicare by reason of the provisions of section 1862(a)(1) or (a)(9) of the Act (not reasonable and necessary or custodial care), and if the Secretary's determination that the payment was incorrect was made after the third year following the year in which notice of that payment was sent to the individual.

II. Current Regulations and Instructions Dealing with Overpayments

The provisions of section 1870(a) through (d) of the Act are incorporated in our regulations in §§ 405.350 to 405.359 (''Liability for Payments to Providers or Suppliers and Handling of Incorrect Payments''). Specifically, § 405.350 (''Individual's liability for payments made to providers and other persons for services furnished the individual'') provides that an individual is liable for an overpayment if the overpayment cannot be recouped from the provider or supplier or if the provider or supplier is without fault with respect to the overpayment. Section 405.350(c) further specifies that, in the absence of evidence to the contrary, a provider or supplier is deemed to be without fault if the overpayment determination was made after the third year following the year in which a payment notice was sent to the provider or supplier.

In accordance with § 405.350, we look first to recoup an overpayment from the provider or supplier unless: (1) We determine that the overpayment cannot be recouped from the provider or supplier, or (2) the provider or supplier is without fault with respect to the overpayment. Currently, there are no criteria in our regulations pertaining to when a provider or supplier is without fault, nor do our regulations make reference to Social Security Administration (SSA) regulations with respect to provider or supplier fault. However, criteria are listed in section 3708 of the Medicare Intermediary Manual and in section 7103 of the Medicare Carrier Manual that incorporate the principles employed in the SSA regulations.

Under these manual instructions, a provider or supplier is without fault if it exercised reasonable care in billing for and accepting payment. Exercising reasonable care means that the provider or supplier disclosed all material facts and, based on available information, including but not limited to, the Medicare regulations and instructions, had a reasonable basis for assuming that the payment was correct. However, if the provider or supplier had reason to question the payment, it must have promptly brought the question to the attention of the appropriate Medicare contractor (intermediary or carrier).

If the intermediary or carrier, acting on behalf of HCFA, determines that the provider or supplier is liable for the overpayment according to § 405.350 and the applicable manual instructions, we recoup the overpayment from the provider or supplier. If the intermediary or carrier, acting on behalf of HCFA, determines that the provider or supplier is not liable for the overpayment, liability rests with the individual, regardless of whether the individual was without fault. Whether an individual was without fault is not relevant to his or her liability for the overpayment, but is considered in deciding whether to waive adjustment or recovery of the overpayment.

Under § 405.355 (''Waiver of adjustment or recovery''), adjustment or recovery against the individual is waived if the individual is without fault with respect to the overpayment and if recovery would cause substantial financial hardship so that the purposes of title II or title XVIII of the Act would be defeated or if recovery would be against equity and good conscience. Section 405.356 (''Principles applied in waiver of adjustment or recovery'') specifies that the principles applied in determining waiver of adjustment or recovery are the applicable principles found in SSA regulations at 20 CFR 404.506 through 404.509, 20 CFR 404.510(a), and 20 CFR 404.512. These regulations, in part, define ''fault'' (as used in without fault) and explain the conditions for waiver of the adjustment or recovery if an incorrect payment has been made under title II or title XVIII of the Act. (Before we were established as a separate agency, SSA was responsible for both the social security cash benefit program and the Medicare program. Consequently, the two programs have many identical regulations that embody SSA's understanding of the terms used in the overpayment recoupment process.)

Under § 405.356 of our regulations, intermediaries and carriers, acting on behalf of HCFA, currently determine if an individual is without fault, based on SSA regulations at 20 CFR 404.507 (''Fault''). Under 20 CFR 404.507, the following three elements are considered in determining fault:

- Whether the overpayment resulted from an incorrect statement made by the individual that he or she knew or should have known to be incorrect.
- Whether the overpayment resulted from the individual's failure to furnish information that he or she knew or should have known to be material.
- Whether the overpayment resulted from acceptance of a payment that he or she either knew or could have been expected to know was incorrect. These criteria provide the foundation for making individual waiver of adjustment or recovery decisions.

Under § 405.355, we may waive all or part of a recovery against an individual who is found to be without fault if recovery would defeat the purposes of title II or title XVIII of the Act or would be against equity and good conscience. We currently use as a basis for making these determinations the definitions for these terms found in SSA regulations at 20 CFR 404.508 (''Defeat the purpose of title II'') and 20 CFR 404.509 (''Against equity and good conscience; defined'').

Under 20 CFR 404.508, ''defeat the purpose of title II'' means to deprive a person of income required for ordinary and necessary living expenses. Ordinary and necessary expenses, as specified in 20 CFR 404.508, include the following:

- Living expenses, such as food and clothing, rent, mortgage payments, utilities, maintenance, insurance (for example, life, accident, and health insurance including premiums for supplementary medical insurance benefits under title XVIII), taxes, and installment payments.
- Medical, hospitalization, and other similar expenses.
- Expenses for the support of others for whom the individual is legally responsible.
- Other miscellaneous expenses that may reasonably be considered as part of the individual's standard of living.

Using these criteria, 20 CFR 404.508(b) specifies that adjustment or recovery will defeat the purpose of title II, for example, if the person from whom recovery is sought needs substantially all of his or her current income

(including social security monthly benefits) to meet current ordinary and necessary living expenses.

Under 20 CFR 404.509, recovery of an overpayment is against equity and good conscience in the following circumstances:

- Because the individual relied on a notice that payment would be made, or actually received the erroneous payment, the individual—
  - * Changed his or her position for the worse; or
  - * Relinquished a valuable right.
- The individual was living in a separate household from the overpaid person at the time of the overpayment and did not receive the overpayment.

That section further specifies that the individual's financial circumstances are not material to a finding of against equity and good conscience.

HCFA, through its intermediaries and carriers, currently makes determinations of without fault with regard to providers and suppliers. Intermediaries and carriers also coordinate the waiver process if the individual is liable for the overpayment. When an overpayment consists of both Medicare Part A and Part B claims, the lead intermediary or carrier, that is, the one that has paid the most in benefits, is responsible for coordinating the without-fault determinations and the waiver request process. The lead intermediary or carrier coordinates Medicare's activities with all parties, including the intermediary or carrier, the individual or his or her representative(s), the liability insurer or tort-feasor (in Medicare secondary payer cases), and the HCFA regional office, to ensure that the overpayment situation is resolved in accordance with our guidelines.

III. Problem Areas Within the Framework of the Current Regulations and Our Proposed Revisions to the Regulations

A. Without Fault

1. Differences Between the Social Security and Medicare Programs

The proposed regulations regarding without fault will clarify circumstances unique to the Medicare context because the social security regulations do not consider the different roles played by the individual within the social security and Medicare programs. These roles that an individual plays in obtaining benefits from each of the programs are significantly diverse. As a social security claimant, the individual (or his or her representative) receives a cash benefit directly from SSA, generally with no third party involved. As a result, the individual has a very proactive role in providing accurate information to obtain this benefit and has a direct degree of responsibility in accepting the SSA payment each month.

The individual entitled to Medicare, on the other hand, generally receives items or services from a provider or supplier that, in turn, directly bills and accepts payment from the Medicare contractor on behalf of the individual. (There are exceptions to this arrangement, as described later in this preamble.) The information furnished by the individual with respect to the Medicare claim is minimal; most claim-related information is furnished by the provider or supplier. Therefore, the individual entitled to Medicare, in obtaining and accepting Medicare benefits, does not have the same role as a social security claimant.

Because of these role distinctions, the SSA regulations are not always clearly transferable to Medicare overpayment situations. For example, the term ''fault,'' as described in the SSA regulations, focuses on the individual's disclosure of accurate information. This element is emphasized because a social security claimant is in control of all of his or her financial information (for example, receipt of benefit checks and employment information) that often determines the outcome of the claim. SSA relies primarily on the claimant's own self-reporting and disclosure. A social security claimant receives a benefit payment directly and is in a position to know if he or she received more than the correct payment due under title II of the Act.

In contrast, Medicare relies largely on information received from providers and suppliers to determine payment amounts. The individual entitled to Medicare does not have the same control that a social security claimant has in the outcome of a claim. Under most circumstances (with the exception of cases involving unassigned Part B claims and certain Medicare secondary payer situations), the individual entitled to Medicare receives no actual payment and does not know if the payment made under Medicare is correct. Generally, the information generated by a provider or supplier, not information provided by the individual, causes the overpayment to be made. The SSA regulations do not take into account the significant difference between the role an individual plays in receiving social security cash benefits and in receiving Medicare benefits and, therefore, the social security regulations are not always transferable to Medicare overpayment situations.

2. Differences Resulting From Provider and Supplier Involvement

In addition, the SSA regulations do not take into consideration the role that a provider or supplier plays in administering Medicare benefits. While 20 CFR 404.507 describes what constitutes fault (as it relates to without fault) on the part of an overpaid individual, it makes no specific reference to without fault as it pertains to a provider or supplier and does not adequately provide for situations when a determination regarding without fault must be made for providers or suppliers.

While the criteria in 20 CFR 404.507 can generally be applied to all recipients of payments, they do not specifically consider substantive differences between an individual and a provider or supplier billing for and accepting Medicare payment. (Generally, the recipient of a Medicare payment is a provider or supplier. However, in the case of unassigned claims, the recipient is the individual.) Because of Medicare provisions that require all providers and suppliers to submit claims on behalf of individuals, the individual entitled to Medicare does not participate in the actual claim filing process in a significant way. Also, in most instances, it is the provider or supplier, not the individual, that actually receives the Medicare payment. This is because most providers and suppliers agree to bill Medicare directly and to accept the payment amount as determined under the applicable payment system (prospective payment, reasonable cost method, fee schedule, or reasonable charge method) as total payment for covered services. For providers, this is accomplished by entering into a Medicare provider agreement. Suppliers accomplish this either by agreeing to accept assignment on an individual claims basis or by entering into a Medicare participation agreement. Under these circumstances, the individual is responsible for providing the entity with the correct insurance information and authorizing the claim by signing the claim form; however, he or she plays no direct role in the claim filing process and receives no direct payment.

In the case of a supplier that does not accept Medicare assignment, the individual pays the supplier directly. The claim is submitted to the Medicare contractor by the supplier, and the Medicare contractor pays the individual directly. Although in these situations the individual receives payment directly, he or she normally has no way of knowing if the Medicare payment

amount for the item or service he or she received is correct.

These differences raise questions as to whether the same criteria should be applied both to the individual and to the provider or supplier when determining without fault with regard to an overpayment. In particular, determining if the recipient of the payment knew, or could reasonably be expected to know, that the payment amount was incorrect depends on determining the level of information available to the recipient.

The information available to a provider or supplier is more extensive than that available to an individual. We furnish instruction manuals to providers, and intermediaries and carriers send detailed instructions, such as newsletters, to suppliers. This direct access to Medicare payment information should impart a degree of knowledge and responsibility to both providers and suppliers that does not apply to individuals.

For example, a provider or supplier that receives an unusual payment amount for a routinely billed service should be in a better position than the individual to question and determine whether the payment amount is correct. This is because of the information available to a provider or a supplier (for example, a physician should know the Medicare physician fee schedule payment amount for a particular service). Although the individual may directly receive a Medicare payment, an Explanation of Medicare Benefits or a Notice of Utilization showing that Medicare payment has been made, the individual normally has no way of knowing if the Medicare payment amount for a particular covered service or item is correct.

Thus, we propose revisions to the regulations that consider the substantive differences between an individual accepting a Medicare payment and a provider or supplier billing for and accepting a Medicare payment.

3. Revisions Proposed to Reflect Circumstances Unique to Medicare

a. Without Fault as it Applies to Individuals Entitled to Medicare. In this rule, we propose to add regulations that are specifically applicable to individuals entitled to Medicare for determining without fault in Medicare overpayment situations. We propose that an individual be considered to be without fault with respect to a Medicare overpayment if he or she exercises reasonable care in requesting Medicare payment and in accepting Medicare payment.

Under these proposed regulations, an individual exercised reasonable care if he or she accepted a payment that he or she did not know, or could not reasonably have been expected to know, was incorrect; accepted a payment that, on the basis of information available, he or she could reasonably assume was correct; or accepted payment because of reliance on erroneous written information on the interpretation of a pertinent provision of the Act or implementing regulations from an official source within HCFA, SSA, or a Medicare contractor.

Conversely, we propose that an individual is not without fault when the individual: (1) Receives prior written notice that a particular item or service was not covered by Medicare; (2) makes an incorrect statement or withheld information to obtain benefits that were not due him or her; (3) accepts a payment that he or she knew or should have known was not due; or (4) receives a prior determination of liability under the limitation on liability provisions in section 1879 of the Act for the specific items or services for which a without-fault determination is being made.

Criteria to be considered in deciding whether an individual was without fault would include the cause of the overpayment, the individual's ability to realize that the payment was incorrect (based on his or her age, education, and physical or mental state), and whether the individual could reasonably be expected to have taken action to prevent the overpayment from occurring.

b. Without Fault as it Applies to Providers and Suppliers. We propose to incorporate in regulations criteria that currently exist in the Medicare Intermediary Manual, the Medicare Carrier Manual, and 20 CFR 404.506.

Under these proposed regulations, providers or suppliers are ''not without fault'' unless they exercise reasonable care in billing for and accepting Medicare payments and either: (1) Did not know, and could not reasonably have been expected to know, that Medicare payment exceeded amounts payable under the Medicare statute and regulations and, therefore, accepted payment based on a reasonable assumption that the payment was correct; or (2) did know, or could reasonably have been expected to know, that Medicare payment exceeded amounts payable under the Medicare statute and regulations but questioned the appropriate intermediary or carrier in writing, within 60 days of receipt of the excess payment. If, after questioning the appropriate intermediary or carrier, the provider or supplier relied on a written response from the intermediary or carrier that stated that the Medicare payment was correct, or failed to receive a response from the intermediary or carrier within 120 days of the intermediary's or carrier's receipt of the written inquiry, the provider or supplier is without fault.

We propose that the exercise of reasonable care in billing includes making full disclosure of all material facts and complying with each applicable provision specified in subpart C (''Claims for Payment'') of part 424, including the supplying of all the necessary information on the billing form, to ensure correct payment by the intermediary or carrier. We further propose criteria for determining that a provider or supplier knew, or could reasonably have been expected to know, that Medicare payment exceeded amounts payable under the Medicare statute and regulations. Under these proposed criteria, a provider or supplier is considered to have known that Medicare payment exceeded amounts payable under the Medicare statute and regulations if any one of the following conditions is met:

- It had knowledge that payment exceeded amounts payable under the statute and regulations based on experience, actual notice, or constructive notice, including (except in very limited circumstances described later in this preamble) final publication of payment amounts in official source documents; receipt of HCFA notices including manual issuances, bulletins, or other written guides or directives from intermediaries, carriers, or Peer Review Organizations; or experience with Medicare payment amounts for similar or reasonably comparable items or services. Under this criterion, final publication of payment amounts in official source documents includes correction notices that are published after the initial publication.
- It received prior notice from the peer review organization, intermediary, or carrier of the correct Medicare payment for the items or services furnished or for similar or reasonably comparable items or services.
- It gave the individual prior notice of the correct Medicare payment for the items or services furnished or for similar or reasonably comparable items or services.

These proposed criteria are similar to those contained in § 411.406 (''Criteria for determining that a provider, practitioner, or supplier knew that services were excluded from coverage as custodial care or as not reasonable and necessary''). Those criteria are used to determine if a provider or supplier is liable for payment of an item or service

under the limitation on liability provisions in section 1879 of the Act because of knowledge that Medicare payment for the item or service would be denied.

Because the criteria we propose in the without fault regulations is based, in part, on the limitation on liability provisions, we propose that a provider or supplier that has already been determined liable under the limitation on liability provisions in section 1879 of the Act for a specific item or service cannot be found without fault with regard to the overpayment for that specific item or service.

c. Without Fault as it Applies to Peer Review Organization Responsibilities. Because this proposed rule would furnish providers and suppliers with appeal rights for determinations that the provider or supplier must repay an overpayment because the provider or supplier is not-without-fault (discussed later), we are considering expanding the responsibility for making without-fault determinations to peer review organizations. Although our final decision may be that intermediaries and carriers make the without-fault determinations for overpayments resulting from peer review organization determinations, we want to provide as much flexibility as possible in exploring this issue. Therefore, we propose revising our regulations to provide peer review organizations with the authority to make without-fault determinations. However, it should be noted that intermediaries, carriers, and peer review organizations that make determinations are acting on behalf of HCFA.

d. Without Fault as it Applies to the Prospective Payment System. Under section 1886(d) of the Act, effective with hospital cost reporting periods beginning on or after October 1, 1983, we established a system of payment for acute inpatient hospital stays under Medicare Part A (Hospital Insurance), based on prospectively-set rates. Under this prospectively-set rate system (the prospective payment system), Medicare payment is made at a predetermined, specific rate for each hospital discharge. All discharges are classified according to a list of diagnosis-related groups. The regulations governing the inpatient hospital prospective payment system are located at 42 CFR part 412.

Regarding payments under the prospective payment system, we are required, under section 1886(e)(5)(B) of the Act, to publish by September 1 of each year a list of diagnosis-related group categories and provide instructions on calculating proper Medicare payment amounts. Thus, hospitals paid under the prospective payment system generally have a way to determine whether a payment is correct or incorrect. Accordingly, these hospitals are generally liable for refunding Medicare overpayments they receive under the prospective payment system because, under most circumstances, they cannot be found to be without fault since they have an independent means of conclusively determining whether the prospective payment system payment they accept is correct.

However, under our proposed rule, a provider may be found to be without fault for payments under the prospective payment system in the event of an error in our prospective payment system publication in the **Federal Register**, relating to the diagnosis-related group for which the hospital was overpaid. In these circumstances, a hospital that can show, based on criteria specified in these proposed regulations, that it did not know and could not reasonably have been expected to know that a Medicare payment based on an erroneous published schedule of payment amounts exceeded amounts payable under the Medicare statute and regulations is considered to be without fault for the overpayment that resulted from the erroneous published schedule of payment amounts. We note, however, that this rule would not apply if a correction notice containing the correct schedule of payment amounts has been published in the **Federal Register** after the initial publication of the erroneous schedule of payment amounts. In this instance, the correction notice imputes the same responsibility for knowledge of the overpayment as a correct published schedule of payment amounts.

If the hospital is without fault, liability shifts to the individual under section 1870(b) of the Act. However, under these circumstances, an individual will also be without fault because there is nothing to indicate that the overpayment resulted from the individual not exercising reasonable care in requesting and accepting Medicare payment, as specified in our regulations. In addition, recovery from the individual may be waived on the basis of ''equity and good conscience'' with respect to Medicare overpayments of this type.

The same rules would also apply for Medicare payment for inpatient hospital capital-related costs. In a final rule published on August 30, 1991 (56 FR 43358), a new subpart M was added to 42 CFR part 412 to provide for a prospective payment system for hospital inpatient capital-related costs. Previously, hospital inpatient operating costs were the only costs covered under the prospective payment system. However, section 1886(g)(1) of the Act now requires that capital-related costs be paid under the prospective payment system effective with cost reporting periods beginning after September 30, 1991, for hospitals paid under the prospective payment system. Implementing regulations are found at § 412.300.

e. Without Fault and Aggregate Overpayment Issues. Under section 1870 of the Act, if a provider is found to be without fault for an overpayment, the individual who received the service for which payment was made is liable for the overpayment. Therefore, application of the without fault provision in section 1870 of the Act is limited to overpayments for individual claims for which lability can ultimately be shifted to a specific individual.

Consequently, the without fault provisions under section 1870 of the Act do not extend to aggregate overpayment issues, such as Medicare cost report errors, because liability for an individual claim cannot be shifted to a specific individual. For certain providers, aggregate overpayments result from payments under a reasonable cost payment methodology in which payment is made on an interim basis throughout the year, with appropriate adjustments made upon settlement of annual cost reports. Because Medicare cost report errors are not directly associated with specific services, liability cannot be shifted from a specific provider to a specific individual.

Thus, the without fault provisions of this proposed rule would not apply to overpayments resulting from aggregate payment issues, such as cost report errors. These overpayments are addressed in section 1878 of the Act, which contains provisions relating to the Provider Reimbursement Review Board and the circumstances under which a provider may obtain a hearing with the Board.

f. Without Fault as it Applies to Payment Under the Medicare Physician Fee Schedule. A major change in Medicare physician payment rules was enacted as part of the Omnibus Budget Reconciliation Act of 1989, (OBRA 1989), Public Law 101–239. Section 6102 of OBRA 1989 added to the Act a new section 1848, ''Payment for Physicians' Services.'' The new section contains three major elements: (1) A new fee schedule for physicians' services based on a Resource-Based Relative Value Scale to replace the reasonable charge payment mechanism; (2) a Medicare volume performance

standard for the rates of increase in Medicare expenditures for physicians' services; and (3) limits on the amounts that nonparticipating physicians submitting unassigned claims can charge individuals for covered services.

We issued a final rule on November 25, 1991, (56 FR 59502) to implement section 1848 of the Act. (The physician fee schedule regulations are set forth at 42 CFR part 414, subpart A.) Section 1848 requires that the fee schedule include national uniform relative values for all physicians' services. The fee schedule is being phased in over 4 years, beginning in 1992, with the new rules fully effective in 1996. During 1992 through 1995, transition provisions generally blend the old payment amount with the fee schedule amount.

At the end of each calendar year, we send each physician and other supplier a schedule of the next year's physician fee schedule amounts. In addition, the fee schedule is published in the **Federal Register** each year. Therefore, all physicians and other suppliers paid under the physician fee schedule are generally in a position to determine whether a payment is correct. Accordingly, physicians and other suppliers are generally liable for refunding Medicare overpayments they receive under this payment system because, under most circumstances, they cannot be found to be without fault since they have an independent way of conclusively determining whether the payment they accept is correct.

However, under our proposed rule, a physician or other supplier may be found to be without fault if an error in the annual fee schedule for the services for which the physician or supplier was overpaid is published in the **Federal Register**. In these circumstances, a physician or other supplier is considered to be without fault for an overpayment resulting from the erroneous schedule if the physician or supplier can show, based on criteria specified in these proposed regulations, that he or she did not know and could not reasonably have been expected to know that a Medicare payment based on an erroneous schedule of payment amounts exceeded amounts payable under the Medicare statute and regulations. We note, however, that this would not be the case if a notice correcting the erroneous schedule has been published.

If the physician or other supplier is found to be without fault, liability shifts to the individual under section 1870(b) of the Act. However, under these circumstances, the individual will also be without fault under our proposed regulations because there is nothing to indicate that the overpayment resulted from the individual not exercising reasonable care in requesting and accepting Medicare payment. In addition, recovery from the individual may be waived on the basis of equity and good conscience with respect to Medicare overpayments of this type.

g. Without Fault As It Applies to Medicare Secondary Payer Obligations. A large proportion of Medicare overpayments results from Medicare secondary payer situations. Because the nature of Medicare secondary payer obligations is somewhat different from other types of Medicare overpayments, in that Medicare secondary payer situations involve a conditional payment and a third party payer, the current regulations addressing without fault pose particular problems for the recovery of Medicare secondary payer obligations.

For example, if a conditional Medicare payment becomes a de facto overpayment (that is, a primary payer pays after Medicare payment) as a result of an individual's action that is unrelated to the filing of a Medicare claim, direct application of the SSA regulations can be difficult. The SSA regulations predate the Medicare secondary payer provisions and, therefore, do not provide for them. Under the current regulations, when an Medicare secondary payer obligation results from a conditional Medicare payment for an individual who is injured in an automobile or other accident, and who subsequently receives a settlement or damage award, the individual is generally considered to be without fault. This is because, within the framework of the SSA regulations, the obligation does not result from failure to supply information because even if the individual informs us of a pending suit we frequently make a conditional payment for the claim.

Thus, when applying the SSA regulations, few circumstances will ever arise when the individual could be found to be at fault in causing an overpayment of this type. This de facto without-fault finding, when coupled with financial or equity considerations, could result in waiving recovery from the individual in the majority of cases, even though the individual may have been instrumental in causing the overpayment.

We do not believe this to be an appropriate outcome in Medicare secondary payer contexts because, under our current operating procedures, all individuals entitled to Medicare receive a Notice of Utilization or an Explanation of Medicare Benefits showing that Medicare has paid for services. Therefore, individuals are informed that Medicare has made a conditional payment. We believe that, because this information is available, a degree of responsibility should be imputed to the individual or the individual's representative. We believe that the individual who elects to pursue subsequent settlement or damage awards for injuries from liability or no-fault insurers or, in some cases, tort-feasors, should be responsible for notifying us of this intent and protecting the proceeds until the Medicare claim is satisfied. If the individual does not take this responsibility, he or she should be found not without fault once a liability insurance payment is made and we seek to recover our conditional payment.

All too often, we are not aware of an individual's liability suit until a liability insurance payment is about to be made, or thereafter. At that point, it is more difficult to assert Medicare's interest, despite the fact that under the Medicare secondary payer statute, Medicare has a priority right of recovery. The Congress intended that Medicare payment would be available to individuals to pay for their covered medical expenses to avoid their having to pay for their medical expenses out-of-pocket. Since Medicare conditionally paid for these medical expenses, Medicare is entitled, under the statute, to reimbursement, as opposed to the individual collecting twice for the same loss—first in the form of a benefit payment and then in the form of a cash settlement.

We propose adding regulations that are specifically applicable to determining without fault for Medicare overpayments resulting from Medicare secondary payer conditional payments. We propose that a provider or supplier will generally be not-without-fault with respect to a Medicare payment in a Medicare secondary payer situation unless the provider or supplier complied with all of the claims filing requirements specified in 42 CFR part 411 and, in the case of providers, the provider agreement provisions in 42 CFR part 489. In addition, we are specifying in these regulations that the without fault provisions do not apply to third party payers or other non-Medicare entities involved in a Medicare secondary payer case.

With regard to individuals in Medicare secondary payer cases, we propose that an individual would not be considered to be without fault if the facts show that the individual failed to notify Medicare within 30 days of the receipt of a payment from an entity that is primary to Medicare or the overpayment resulted because the

individual failed to file a proper claim, as required in regulations, with an entity that is primary to Medicare; made an incorrect statement or withheld information to obtain benefits that were not due him or her; or accepted a payment that he or she should have known was not due.

In some cases we seek recovery of Medicare secondary payer obligations from group health plans as a result of the data match in section 1862(B)(5) of the Act and other procedures. In those situations, it would ordinarily be considered inequitable to recover from the individual, and we will not recover the incorrect Medicare payment from the individual unless the Medicare payment was made to the individual.

In the past, we have required written notification when an individual requests a waiver of recovery of an overpayment. However, on July 10, 1995, we published a proposed rule (60 FR 35544) offering the option of requesting by telephone a review of Part B initial claim determinations. Consequently, we are also proposing in this document that an individual may request to be found without fault and may request waiver by telephoning the contact listed in the notice from the carrier, intermediary, or HCFA.

We also propose to require that, if the individual or the individual's representative received an Explanation of Medicare Benefits or a Notice of Utilization that Medicare made a payment, and the individual subsequently elects to pursue a liability settlement or damage award for an illness or for injuries sustained in an accident, he or she must notify the Medicare contractor within 60 days of filing a suit or a claim with the insurer. Otherwise, he or she cannot be considered to be without fault. Thus, when Medicare is billed for services furnished to an individual, and the individual (or his or her estate) pursues a liability or damage award or payment from another source, he or she must notify the Medicare contractor both when a suit or claim is filed and when payment is received from any source other than Medicare. This notice requirement does not apply in MSP group health plan situations. Failure to furnish the Medicare contractor with both notices will result in the individual (or his or her estate) being ''at fault'' with respect to any resulting Medicare secondary payer obligation.

To ensure that beneficiaries realize their obligation to notify the Medicare contractor as proposed above, we would include these requirements in general program information furnished to Medicare beneficiaries, as well as in material (such as, pamphlets) that are targeted to Medicare secondary payer situations. Also, we would include these new requirements in any notice or communication we send to beneficiaries in connection with potential liability situations.

B. Not-Without-Fault Determinations and the Appeals Process

Under current regulations (405.704(b)(14)), determinations concerning the waiver of adjustment or recovery of overpayments are considered initial determinations, for purposes of the Medicare appeals process, under Medicare Part A and Part B with respect to individuals. These determinations are often based on not-without-fault findings. However, we do not have regulations that address not-without-fault determinations made for providers or suppliers. We believe that our regulations need to be revised to afford providers and suppliers an explicit right to appeal determinations made under section 1870(b) of the Act that they are not without fault and, therefore, that they must repay an overpayment.

Although the Medicare statute does not specifically provide for appeal rights for providers and suppliers regarding a not-without-fault determination, we believe that the administrative appeals process should include that issue. This process will ensure that, when a not-without-fault determination is made, the adversely-affected party has a due process right of appeal that is expressly recognized by regulation.

Therefore, we propose to revise the Medicare appeals regulations to state that, if a provider or supplier that is not without fault receives an initial determination that an overpayment must be refunded, the issue of without fault would also be appealable.

C. Defeats the Purposes of Title II or Title XVIII of the Act and Equity and Good Conscience

If it is determined that an individual entitled to Medicare is without fault, we may waive all or part of a recovery against that individual according to SSA regulations at 20 CFR 404.508 (''Defeat the purpose of title II'') or 20 CFR 404.509 (''Against equity and good conscience; defined''). SSA's definitions of these terms and the examples cited in which they arise reflect SSA's assessment of how this principle applies to recovery from a social security claimant when the claimant has received more than the correct payment due under title II of the Act. There are no illustrations that explain how to apply this principle to a Medicare overpayment situation. As previously noted, an individual entitled to Medicare and a social security claimant are in distinguishable positions with respect to overpayments. For example, the social security claimant is actually receiving a cash benefit. However, the individual entitled to Medicare, in most cases, receives no direct payment. Consequently, the SSA rules are not always directly transferable to a Medicare overpayment situation and provide no clear guidelines for their application to Medicare situations.

In particular, in the case of a Medicare secondary payer overpayment, transferring the SSA regulations for granting a waiver based on financial hardship or equity and good conscience poses a specific problem. Because the SSA regulations predate the existence of the Medicare secondary payer provisions, they were not written with Medicare secondary payer situations in mind and contain no specific illustrations applying to Medicare secondary payer recoveries. In principle, in the Medicare secondary payer context, there is no basis for the existence of financial hardship because the individual either knows or may reasonably be expected to know from the inception of a claim that Medicare has a priority right of recovery (that is, that we can recover our conditional payments directly from the primary payer or from any entity that received payment, directly or indirectly, from the primary payer).

The facts of a particular circumstance, however, do not always support this position. For example, suppose an individual entitled to Medicare has received a cash settlement as a result of a liability suit after receiving Medicare payment. Subsequently, the individual spends the settlement proceeds without repaying Medicare. Within the framework of the SSA regulations, the overpayment does not result from failure to supply information since Medicare pays even if the individual makes us aware of a pending suit. Therefore, the individual passes the first test of being without fault.

The final settlement payment received by the individual as a result of this liability suit could be small enough that an individual could contend that reimbursing Medicare would cause economic hardship or would be inequitable. Thus, it is possible that the individual would not be required to repay Medicare for this type of overpayment because of the application of the SSA regulations addressing without fault coupled with the SSA definitions of ''defeats the purposes of title II or title XVIII'' and ''against equity

and good conscience.'' We believe that the current Medicare overpayment regulations should be revised to not preclude recovery of an overpayment in Medicare secondary payer situations, but be written in a way that does not unfairly disadvantage the individual or the Medicare program.

Additionally, a 1990 Court of Appeals decision indicates that SSA's definition of against equity and good conscience may be too narrow for SSA or Medicare issues. In the court case, a social security claimant challenged SSA's waiver denial determination that, although he was without fault in causing the overpayment, recovery would not defeat the purpose of title II or be against equity and good conscience. In an unreported decision, the District Court for the Western District of Washington upheld the waiver denial. However, the Court of Appeals for the Ninth Circuit reversed the decision, holding that requiring the plaintiff to repay the overpayment would be against equity and good conscience. (*Quinlivan* v. *Sullivan,* 916 F.2d 524 (9th Cir. 1990)).

The Court indicated that, although the Act does not define the phrase against equity and good conscience, the Secretary has interpreted it, in 20 CFR 404.509, to be narrowly limited to situations when (1) the claimant changed his or her position for the worse, (2) relinquished a valuable right, or (3) lived in a separate household from the overpaid person at the time of the overpayment and did not receive the overpayment.

The Court was of the opinion that the Congress intended to broaden the availability of the waiver (*id.* at 526). Accordingly, the Court concluded that ''the meaning of the phrase, 'against equity and good conscience,' cannot be limited to the three narrow definitions set forth in the Secretary's regulations. The Congress intended a broad concept of fairness to apply to waiver requests, one that reflects the ordinary meaning of the statutory language and considers the facts and circumstances of each case'' (*id.* at 527). The Court favored the against equity and good conscience interpretation used by the Department of Veterans Affairs (VA) in its regulations at 38 CFR 1.965 (July 1, 1988 edition), published on July 19, 1974 (39 FR 26400) (*id.* at 526 and 527, n.2).

The cited VA regulation indicates that the application of the standard, ''equity and good conscience,'' will be applied when the facts and circumstances in a particular case indicate a need for reasonableness and moderation in the exercise of the Government's rights. Under the VA regulations, equity and good conscience means arriving at a fair decision between the obligor and the Government that is not unduly favorable or adverse to either side.

In making a determination of equity and good conscience, the VA regulation specified that consideration should be given, but should not be limited, to the following elements: (1) Fault of the debtor; (2) balance of faults; (3) undue hardship; (4) defeats the purpose for which benefits were intended; (5) unjust enrichment; and (6) changed position to one's detriment. In applying this single standard for all areas of indebtedness, the VA regulation further indicates that consideration should be given to the elements of (1) fraud or misrepresentation of a material fact, (2) material fault, and (3) lack of good faith; any one of which, if found, would preclude the granting of a waiver.

Because the *Quinlivan* case related to a social security claimant, we are not bound to follow that decision. However, a 1993 District Court decision found that we were not using broad concepts of fairness in reviewing waivers in Medicare secondary payer liability cases, nor had we told our decision makers to ''base the waiver determination on the totality of the circumstances.'' We submitted substantial materials to the court to reflect our actual policies (contrasted with the policies reflected in the SSA regulations) with regard to waiver of recovery in Medicare secondary payer liability cases. However, despite those representations, the court ordered us to formalize these policies by way of written guidelines to ensure their application, instead of the SSA policies, when reviewing whether waiver should be granted under equity and good conscience in Medicare secondary payer liability situations. The court, making reference to the *Quinlivan* case, further ordered that the guidelines incorporate broad concepts of fairness and not limit waivers to the three factual situations listed in 20 CFR 404.509. (*Zinman* v. *Shalala,* Civ. No. 90–20674 (N.D. Cal. September 24, 1993 and November 29, 1993)). The September ruling is reported at 835 F. Supp. 1135 (N.D. Cal. 1993).

As a result of that court ruling, we issued guidelines to all of our regional offices on November 17, 1994. In those guidelines, we incorporated our longstanding interpretation of against equity and good conscience as that principle relates to Medicare overpayments. While the guidelines were issued to apply to Medicare secondary payer liability overpayment situations, we advised that they could also be used as guidance in overpayment situations other than those involving Medicare secondary payer liability cases.

We have always taken the broader view of equity and good conscience that the *Quinlivan* and *Zinman* Courts endorsed. Not only do we find the Courts' reasoning in those cases to be persuasive, we also find the language of the VA regulation to be a useful guide. Accordingly, in formulating standards for applying equity and good conscience to Medicare situations for the guidelines issued in November 1994, we have not only expressed our long-held expansive view of this concept, we have also incorporated, to the extent possible, the VA approach in expressing that policy.

We propose to incorporate into our regulations our current policies regarding when recovery of an overpayment may be waived based on financial hardship. Our current policies are in accordance with SSA's definition of defeat the purposes of title II or title XVIII. Under this proposed regulation, recovery of an overpayment would defeat the purposes of title II or title XVIII when the individual needs substantially all current income and assets to meet ordinary and necessary living expenses.

We propose to consider the individual's current assets and ordinary and necessary living expenses when evaluating requests for waiver based on financial hardship. Ordinary and necessary living expenses would include the following:

- Current living expenses, such as food and clothing, rent, mortgage payments, utilities, maintenance, insurance (for example, life, accident, and health insurance including premiums for Part B Medicare), taxes, and installment payments.
- Current medical, hospitalization, and other related expenses not covered by Medicare or another insurer.
- Expenses for the support of others for whom the individual is legally responsible.
- Other miscellaneous expenses that may reasonably be considered necessary to maintain the individual's current standard of living.

In addition, we propose to include in the regulations examples that demonstrate how the principles of defeat the purposes of title II or title XVIII would be applied in Medicare overpayment situations.

We propose to add regulations that incorporate criteria to be used when determining whether recovery of an overpayment may be waived based on equity and good conscience. Our proposed regulations require that the standard of equity and good conscience would be applied to Medicare

overpayment recoveries using broad concepts of fairness and reviewing the totality of the circumstances in each particular case. We have used as the basis for our proposed regulations both language from the VA regulation on equity and good conscience found at 38 CFR 1.965, which the U.S. Court of Appeals for the Ninth Circuit believes reflects the intent of the Congress, and guidelines that were issued as a result of the Zinman court case (as discussed earlier in this preamble).

Under the proposed regulations, factors to be considered when applying the standard of equity and good conscience include, but are not limited to, the following:

- The amount of the overpayment.
- The size of a liability settlement and the amount the individual would retain if Medicare recovered.
- The degree to which recovery would cause undue hardship for the individual.
- The degree to which Medicare and/or its contractors contributed to causing the overpayment.
- The degree to which the individual contributed to causing the overpayment (even if determined to be without fault in accordance with § 401.355).
- The impact of an accident on the individual, both physically and financially.
- Whether the individual would be unjustly enriched by a waiver of recovery.
- Whether it would be equitable for us to reduce the recovery if the individual is responsible for noncovered accident-related out-of-pocket expenses and/or future accident-related expenses.
- Whether the individual made a personal financial decision based on his or her reliance on erroneous information supplied to the individual by Medicare or SSA, and recovery would change the individual's position to his or her material detriment.

Also, we would provide several Medicare overpayment examples in which waiver of recovery is being sought based on the concepts involved with equity and good conscience to illustrate how those concepts are to be applied.

In some cases an overpayment is made to a without-fault provider or supplier on behalf of a without-fault individual who did not receive the payment. In those situations, we ordinarily would consider recovery from the individual to be inequitable, and would, therefore, waive recovery.

In accordance with section 1870(c) of the Act, we would specify that recovery is deemed to be against equity and good conscience if the overpayment resulted from expenses incurred for items or services for which payment may not be made under Medicare by reason of the provisions of 1862(a)(1) or (a)(9) of the Act (reasonable and necessary or custodial care), and if the Secretary's determination that the payment was incorrect was made after the third year following the year in which notice of that payment was sent to the individual.

The basic concepts embodied in the principle of waiver based on equity and good conscience assume that an individual did not intentionally cause an overpayment. Therefore, we propose that applying the equity and good conscience standard for waiving recovery does not apply if we determine that the individual committed fraud, misrepresentation, or some other action or omission that indicates the individual's lack of good faith in causing an overpayment.

D. Waiver Policy With Regard to Liability Settlement Agreements and Stipulations

In general, Medicare policy requires recovering payments from liability awards or settlements, whether a settlement arises from a personal injury action or a survivor action, without regard to how a settlement agreement stipulates disbursement should be made. This requirement also applies to situations in which the settlements do not expressly address damages for medical expenses. Since liability payments are usually based on the injured or deceased person's medical expenses, liability payments are considered to have been made ''with respect to'' medical services related to the injury even when the settlement does not expressly include an amount for medical expenses. To the extent that Medicare has paid for these services, the law obligates us to seek recovery of Medicare payments.

The only situation in which we recognize allocations of liability payments to nonmedical losses is when the payment is based on a court order on the merits, that is, the court makes a substantive decision on the amounts to be awarded. If the court specifically designates amounts that are for the reimbursement of pain and suffering or other amounts not related to medical services, we will accept the court's designation and not seek recovery from portions of court awards that are designated as payment for losses other than medical services.

Conversely, we do not generally grant waivers if an individual obtains a settlement that is expressly awarded for medical expenses. However, we believe there are circumstances in which waiver could be justified. For example, a situation could arise in which an individual's injury was great but the award of damages was small, or in which the individual incurred bona fide medical expenses (other than deductibles, premiums, and coinsurance) that were not reimbursed by Medicare; that is, out-of-pocket medical expenses. We believe the criteria we propose for equity and good conscience are broad enough that these situations will be taken into consideration when determining whether waiver of recovery should be granted.

E. Waiver Policy With Regard to Estates

Under current law, a deceased individual's estate may request a waiver of adjustment or recovery of an overpayment when the estate (or the now-deceased individual) has effected a liability recovery. Although in these situations an estate (or the now-deceased individual) may be found to have been without fault with respect to notifying us of the third party recovery, it is generally difficult to satisfy the second test for waiver—that recovery from the estate would defeat the purposes of title II or title XVIII or be against equity and good conscience. Because the individual is deceased, he or she does not need the monies to meet ordinary and necessary living expenses or medical expenses. In addition, it is unlikely that the estate would warrant the money based on an argument of detrimental reliance. Therefore, waiver is generally not applied in these situations.

However, when a title II dependent survives a deceased individual (who is without fault), and Medicare's recovery or adjustment of an overpayment from the estate would be made by decreasing payments to the title II dependent, situations could arise in which waiver of adjustment or recovery of the overpayment would be appropriate. Therefore, we propose adding a provision to the regulations that would permit a waiver for an estate if the estate (and the individual) were without fault and the individual had a surviving title II dependent. A waiver would be granted in these situations if recovery from the estate would be made by decreasing payments to the title II dependent and the recovery would defeat the purposes of title II or title XVIII or would be against equity and good conscience.

IV. Provisions of the Proposed Regulations

The existing regulations at §§ 405.301 through 405.359 would be removed.

With the exception of § 405.356, these sections would be replaced by proposed §§ 401.301 through 401.370. The remaining sections of subpart C of part 405 (§§ 405.370 through 405.380) would be redesignated and moved into subpart D of part 401 as §§ 401.375 through 401.396.

These proposed regulations would supersede SSA criteria for Medicare purposes. SSA criteria would no longer have any application to recovering Medicare overpayments.

Generally, this proposed rule clarifies the explicit criteria and circumstances under which a provider, supplier, or individual will be relieved of liability for a Medicare overpayment. Thus, we are proposing no changes to current carrier and intermediary liability in instances when an overpayment results from a carrier or intermediary error. We are aware, however, of the perception that carriers and intermediaries may not be held accountable in instances when an overpayment results from their error. Therefore, we are requesting comments on proposed changes to our current carrier and intermediary standards that might introduce a higher level of accountability when overpayments are the result of carrier or intermediary errors, regardless of whether a provider or supplier was without fault.

As part of the proposed changes to the regulations, we would describe ''recovery'' to include ''adjustment'' as one type of recovery, rather than listing it separately, as in section 1870 of the Act. Under Medicare operations, adjustment is one way we can recover an overpayment from an individual who is found liable for that overpayment. However, we have alternative ways of recovering an overpayment that we often use before adjusting title II or railroad retirement benefits. Therefore, we would include adjustment as one of several ways we may recover from an individual (or his or her estate).

In addition, we would make certain technical changes to the regulations.

Once these proposed regulations are published as final, conforming changes will be made to the appropriate regulations in 20 CFR part 404 to remove references to title XVIII as they relate to without fault.

V. Collection of Information Requirements

Under the Paperwork Reduction Act of 1995, we are required to provide 60-day notice in the **Federal Register** and solicit public comment before a collection of information requirement is submitted to the Office of Management and Budget (OMB) for review and approval. In order to fairly evaluate whether an information collection should be approved by OMB, section 3506(c)(2)(A) of the Paperwork Reduction Act of 1995 requires that we solicit comment on the following issues:

- The need for the information collection and its usefulness in carrying out the proper functions of our agency.
- The accuracy of our estimate of the information collection burden.
- The quality, utility, and clarity of the information to be collected.
- Recommendations to minimize the information collection burden on the affected public, including automated collection techniques.

However, we believe the information collection requirements referenced in this proposed rule, as summarized below, are exempt from the Paperwork Reduction Act of 1995 for the following reasons:

The requirements in this proposed rule are either facts or opinions obtained or solicited through non-standardized follow-up questions designed to clarify responses to approved collections of information, initiated on an individual basis, and/or are performed in the conduct of an administrative action, investigation, or audit involving an agency against specific individuals or organizations (see title 5 § 1320.3(c), 1320.3(h)(9), and/or 1320.4(a)(2)).

Section 401.352 Waiver of Recovery of Overpayment From Individuals

Section 401.352 requires an individual desiring a waiver of recovery of an overpayment to request the waiver within 60 days from the date on the written notification from HCFA that he or she is liable for the overpayment.

Section 401.364 Without Fault and Medicare Secondary Payer (MSP) Obligations

Section 401.364 requires an individual to give notice of receipt of a payment from an entity that is primary to Medicare and requires an individual desiring a waiver of recovery of an MSP obligation to request the waiver within 60 days from receipt of written notification from HCFA that he or she is liable for the obligation.

Section 411.23 Individual's Cooperation

When HCFA makes conditional payments, § 411.23 requires an individual to notify HCFA of the progress and final outcome of the liability claim. The individual must notify the intermediary or carrier within 60 days of filing a claim with an entity that is primary to Medicare and notify HCFA within 30 days of receipt of payment from an entity primary to Medicare.

Organizations and individuals desiring to submit comments should send them to both the following addresses:

Health Care Financing Administration, Office of Information Services, Information Technology Investment Management Group, Division of HCFA Enterprise Standards, Room C2–26–17, 7500 Security Boulevard, Baltimore, MD 21244–1850, Attn: HCFA–1719–P.

Office of Information and Regulatory Affairs, Office of Management and Budget, Room 10235, New Executive Office Building, Washington, DC 20503, Attn: Allison Herron Eydt, HCFA Desk Officer.

VI. Regulatory Impact Statement

A. Introduction

This proposed rule clarifies our right and responsibility to recover overpayments, and the conditions under which recovery of overpayments may be waived. Under the Medicare statute, when a Medicare overpayment occurs, and a provider or supplier is found to be without fault, the liability is passed on to the individual. Medicare then seeks recovery from the individual or waives the recovery.

Our present regulations do not clearly differentiate an individual's responsibilities from provider and supplier responsibilities with regard to overpayment liability and recovery. This proposed rule describes the conditions for determining who is at fault for the overpayment; specifies criteria for determining the liability of providers, suppliers, and individuals; and describes the circumstances under which recoveries from individuals can be waived.

In addition, this proposed rule would provide for the administrative appeals process to include determinations when a provider or supplier is found to be at fault in causing an overpayment. Also, this proposed rule more specifically defines without fault with respect to Medicare secondary payer situations as well as the conditions for waiver of adjustment or recovery of Medicare overpayments in Medicare secondary payer situations.

We expect the main effect of this proposal would be to prevent some providers and suppliers from claiming without-fault status. This could reduce the number of overpayment liabilities passed on to individuals and result in a slight increase in the amount of money recovered. We estimate that this proposed rule would result in

additional overpayment recoveries for 5 fiscal years as follows:

ESTIMATED ADDITIONAL RECOVERIES FROM THE MEDICARE PROGRAM PARTS A AND B

[In Millions]

1996	1997	1998	1999	2000
$7	$13	$15	$16	$18

B. Regulatory Flexibility Act

Consistent with the Regulatory Flexibility Act (5 U.S.C. 601 through 612) we generally prepare a regulatory flexibility analysis unless the Secretary certifies that a proposed rule would not have a significant economic impact on a substantial number of small entities. For purposes of the Regulatory Flexibility Act, all providers and suppliers are considered to be small entities. Individuals and Medicare contractors are not included in the definition of a small entity.

In addition, section 1102(b) of the Act requires the Secretary to prepare a regulatory impact analysis if a proposed rule may have a significant impact on the operations of a substantial number of small rural hospitals. This analysis must conform to the provisions of section 603 of the Regulatory Flexibility Act. For purposes of section 1102(b) of the Act, we define a small rural hospital as a hospital that is located outside of a Metropolitan Statistical Area and has fewer than 50 beds.

This proposed rule would add regulations that are specifically applicable for determining without fault in general Medicare overpayment situations, as well as for obligations resulting from Medicare secondary payer conditional payments.

Under this proposed rule, a provider or supplier would be required to notify the Medicare contractor in writing within 60 days if any payment exceeds the usual compensation for an item or service under Medicare. A Medicare contractor would be required to respond to a provider or supplier within 120 days of receipt of a written inquiry from the provider or supplier questioning the correctness of a Medicare payment amount.

For Medicare secondary payer situations, an individual pursuing a claim for a liability settlement or damage award for illness or injuries sustained in an accident would be required to notify the Medicare contractor within 60 days of filing a suit or a claim with an insurer. In addition, an individual would be required to notify the Medicare contractor within 30 days of receiving a payment from a liability insurer or, in certain circumstances, direct payment for a tort-feasor.

This proposed rule would not place an unreasonable burden on individuals, providers, suppliers, or Medicare contractors. We believe that the time required for individuals, providers, suppliers, or Medicare contractors to comply with the provisions of this proposed rule would be minimal. As in the past, providers and suppliers would be required to exercise reasonable care in billing for and accepting payment from Medicare.

For these reasons, we have determined that this proposed rule would not result in a significant economic impact on a substantial number of small entities and would not have a significant economic impact on the operations of a substantial number of small rural hospitals. Therefore, we are not preparing an analysis for either the Regulatory Flexibility Act or section 1102(b) of the Act.

In accordance with the provisions of Executive Order 12866, this proposed rule was reviewed by the Office of Management and Budget.

VI. Other Information

A. Response to Comments

Because of the large number of items of correspondence we normally receive on **Federal Register** documents published for comment, we are not able to acknowledge or respond to them individually. However, we will consider all comments that are received by the date and time specified in the **DATES** section of this preamble, and, if we proceed with a subsequent document, we will respond to the comments in the preamble to that document.

List of Subjects

42 CFR Part 401

Claims, Freedom of information, Health facilities, Medicare, Privacy.

42 CFR Part 403

Health insurance, Hospitals, Intergovernmental relations, Medicare, Reporting and recordkeeping requirements.

42 CFR Part 405

Administrative practice and procedure, Health facilities, Health professions, Kidney diseases, Medicare, Reporting and recordkeeping requirements, Rural areas, X-rays.

42 CFR Part 410

Health facilities, Health professions, Kidney diseases, Laboratories, Medicare, Rural areas, X-rays.

42 CFR Part 411

Kidney diseases, Medicare, Reporting and recordkeeping requirements.

42 CFR Part 413

Health facilities, Kidney diseases, Medicare, Puerto Rico, Reporting and recordkeeping requirements.

42 CFR Part 447

Accounting, Administrative practice and procedure, Drugs, Grant programs-health, Health facilities, Health professions, Medicaid, Reporting and recordkeeping requirements, Rural areas.

42 CFR Part 466

Grant programs-health, Health care, Health facilities, Health professions, Peer Review Organizations (PRO), Reporting and recordkeeping requirements.

42 CFR Part 473

Administrative practice and procedure, Health care, Health professions, Peer Review Organizations (PRO), Reporting and recordkeeping requirements.

42 CFR Part 493

Grant programs-health, Health facilities, Laboratories, Medicaid, Medicare, Reporting and recordkeeping requirements.

42 CFR chapter IV would be amended, under the authority of sections 1102 and 1871 of the Social Security Act (42 U.S.C. 1302 and 1395hh), as follows.

PART 401—GENERAL ADMINISTRATIVE REQUIREMENTS

A. Part 401 is amended by adding a new subpart D to read as follows:

Subpart D—Recovery of Overpayments, Suspension of Payment, and Repayment of Scholarships and Loans

General Provisions

401.301 Basis and scope.
401.303 Definitions.

Liability for Payments to Providers and Suppliers and Handling of Incorrect Payments

401.305 Individual's liability for incorrect payments.

Medicare Debts Arising from an Overpayment to a Provider or to a Supplier that Received Payment on Behalf of an Individual

401.310 Overpayments.

401.320 Liability of a provider or a supplier.
401.323 Determining without fault for a provider or a supplier.
401.326 When a provider or a supplier is relieved of liability.
401.329 Recovery of overpayment from providers or suppliers: General rule.

Medicare Debts Arising from an Overpayment to an Individual

401.340 Liability of an individual.
401.343 Overpayment limitation for the individual.
401.346 Recovery of overpayment from the individual.
401.349 Adjustment against an individual's title II or railroad retirement benefits.
401.352 Waiver of recovery of overpayment from individuals.
401.355 Determining without fault for an individual.
401.358 Defeat the purposes of title II or title XVIII of the Act.
401.361 Equity and good conscience.
401.364 Without fault and Medicare Secondary Payer (MSP) obligations.
401.367 Initial determination.
401.370 Liability of certifying or disbursing officer.

Suspension of Payment to Providers and Suppliers and Collection and Compromise of Overpayments

401.375—401.390 [Reserved]

Interest

401.393 [Reserved]

Repayment of Scholarships and Loans

401.396 [Reserved]

Subpart D—Recovery of Overpayments, Suspension of Payment, and Repayment of Scholarships and Loans

Authority: Secs. 1102 and 1871 of the Social Security Act (42 U.S.C. 1302 and 1395hh).

General Provisions

§ 401.301 Basis and scope.

(a) *Statutory basis.* This subpart is based on the indicated provisions of the following sections of the Act:

1815—Payment to providers of services (Part A).

1833—Payment of benefits (Part B).

1842—Use of carriers for administration of benefits.

1848—Payment for physicians' services.

1866—Agreements with providers of services.

1870—Overpayment on behalf of individuals and settlement of claims for benefits on behalf of deceased individuals.

1879—Limitation on liability of individual if Medicare claims are disallowed.

1886—Payment to hospitals for inpatient hospital services.

1892—Offset of payments to individuals to collect past-due obligations arising from breach of scholarship and loan contracts.

(b) *Scope.* (1) This subpart sets forth the policies and procedures for processing incorrect payments and recovering overpayments under the Medicare program and for offsetting payments to collect past-due obligations arising from breach of scholarship and loan contracts.

(2) When the term ''HCFA'' is used in reference to making determinations, it includes intermediaries, carriers, or PROs, as appropriate.

§ 401.303 Definitions.

(a) *Person* (for purposes of this subpart) means an individual, a trust or estate, a partnership, or a corporation.

(b) *Supplier* has the meaning given in § 400.202 of this chapter.

Liability for Payments to Providers and Suppliers and Handling of Incorrect Payments

§ 401.305 Individual's liability for incorrect payments.

(a) In accordance with section 1870(a) of the Act, any payment made under title XVIII of the Act to any provider or supplier with respect to any item or service furnished an individual is regarded as a payment to the individual, and recovery is made in accordance with §§ 401.346 through 401.352 if any of the following conditions exists:

(1) More than the correct amount is paid to a provider or supplier and the intermediary, the carrier, or HCFA determines that—

(i) Within a reasonable period of time, the excess over the correct amount cannot be recouped from the provider or supplier, or

(ii) The provider or supplier was without fault with respect to the payment of the excess.

(2) A payment has been made to a provider for inpatient hospital services furnished to a noneligible individual before notification of noneligibility, in accordance with the provisions described in section 1814(e) of the Act.

(b) For purposes of paragraph (a)(1)(ii) of this section, a provider or supplier is, in the absence of evidence to the contrary, deemed to be without fault if the determination by HCFA, that more than the correct amount was paid, was made after the third year following the year in which notice was sent to the individual that the amount had been paid.

Medicare Debts Arising From an Overpayment to a Provider or to a Supplier That Received Payment on Behalf of an Individual

§ 401.310 Overpayments.

(a) *Definition.* An overpayment consists of Medicare funds a provider, a supplier, or an individual has received in excess of amounts payable under the Medicare statute and regulations.

(b) *Types of overpayments.* Overpayments are of the following types:

(1) Overpayment to a provider that received payment on behalf of an individual (including an overpayment resulting from payment for inpatient hospital services furnished to a noneligible individual before notification of noneligibility in accordance with section 1814(e) of the Act and an overpayment to a provider determined from a cost report under part 413 of this chapter or under the prospective payment systems (PPS) included in part 412 of this chapter).

(2) Overpayment to a supplier that received payment on behalf of an individual.

(3) Direct overpayment to an individual or to a person acting on behalf of an individual.

(c) *Examples of causes of Medicare overpayments.* Examples of how Medicare overpayments occur include, but are not limited to, the following:

(1) Payments made by Medicare for noncovered services.

(2) Medicare payment in excess of the allowable amount for an identified covered service.

(3) Errors and nonreimbursable expenditures in cost reports.

(4) Duplicate payments.

(5) Medicare payment when another entity had the primary responsibility for payment.

(d) *When an overpayment is considered a debt.* (1) *General Overpayments.* Once a determination and any adjustments in the amount of the overpayment have been made, the remaining amount is a debt owed to the United States Government.

(2) *Medicare Secondary Payer (MSP) obligations.* Potential debts arise under the MSP provisions when an individual recovers payment from an entity that had the primary responsibility for payment. Obligations to refund Medicare under the MSP provisions are addressed in part 411, subparts B through F of this chapter and § 401.364.

§ 401.320 Liability of a provider or a supplier.

(a) In accordance with section 1870(b), unless found to be without

fault, as described in this subpart, a provider or a supplier that receives Medicare payment with respect to items or services furnished to an individual is liable for any overpayment resulting from that payment.

(b) HCFA makes determinations whether providers or suppliers are without fault with respect to overpayments.

§ 401.323 Determining without fault for a provider or a supplier.

(a) *General rule.* In accordance with section 1870(b) of the Act, a provider or a supplier is without fault if—

(1) Based on the criteria specified in paragraph (b) of this section, the facts show that the provider or the supplier exercised reasonable care in billing for and accepting Medicare payment; and

(2) Based on the criteria specified in paragraph (c) of this section, the facts show that the provider or the supplier either—

(i) Did not know, and could not reasonably have been expected to know, that Medicare payment was in excess of amounts payable under the Medicare statute and regulations and, therefore, accepted payment based on a reasonable assumption that the payment was correct; or

(ii) Did know, or could reasonably have been expected to know, that Medicare payment was in excess of amounts payable under the Medicare statute and regulations but questioned the appropriate intermediary or carrier in writing, at the correct address, within 60 days of receipt of the excess payment, and—

(A) Relied on a written response from the intermediary or carrier that stated that the Medicare payment was correct; or

(B) Failed to receive a response from the intermediary or carrier within 120 days of the intermediary's or carrier's receipt of the inquiry.

(b) *Exercising reasonable care in billing.* Exercising reasonable care in billing includes—

(1) Making full disclosure of all material facts; and

(2) Complying with each applicable provision specified in subpart C of part 424 of this chapter, including supplying all necessary information on the billing form (or through electronic media), to ensure correct payment by the intermediary or carrier.

(c) *Criteria for determining that a provider or a supplier knew that the payment was an excess payment.* A provider or a supplier is considered to have known that the Medicare payment was in excess of amounts payable under the Medicare statute and regulations if any one of the conditions specified in paragraphs (c)(1) through (c)(3) of this section is met.

(1) *Knowledge based on experience, actual notice, or constructive notice.* It is clear that the provider or the supplier knew, or could have been expected to know, that Medicare payment was in excess of amounts payable under the Medicare statute and regulations on the basis of—

(i) Final publication (including any published correction notice) of payment amounts in official source documents, for example, the **Federal Register** (except in very limited circumstances, as provided for in paragraph (h)(1) of this section);

(ii) Receipt of HCFA notices, either written or electronic, including manual issuances, bulletins or other written guides, or directives from intermediaries, carriers, or PROs; or

(iii) Experience with Medicare payment amounts for similar or reasonably comparable items or services.

(2) *Notice from the PRO, intermediary, or carrier.* Before the items or services were furnished, the PRO, intermediary, or carrier had informed the provider or supplier of the correct Medicare payment for the items or services furnished or for similar or reasonably comparable items or services.

(3) *Notice from the provider or supplier to the individual.* Before the items or services were furnished, the provider or the supplier informed the individual of the correct Medicare payment for the items or services furnished, or for similar or reasonably comparable items or services.

(d) *Intermediary or carrier fault.* Determination of without fault, as specified in paragraph (a) of this section, pertains solely to the liability of the provider or the supplier. Even when HCFA's or an intermediary's or carrier's actions cause or contribute to the overpayment, that fact does not relieve the provider or the supplier from liability for repayment if the provider or the supplier is not without fault.

(e) *Intermediary and carrier action.* (1) The Medicare intermediary or carrier, as appropriate, must provide a written response within 120 days of receipt of a correctly addressed written inquiry regarding the correctness of a Medicare payment amount. If the intermediary or carrier informs the provider or the supplier that the payment amount is correct, or fails to reply within 120 days, the provider or the supplier is without fault even if the intermediary or carrier should later discover that the questioned payment amount was an overpayment.

(2) The 120-day limitation for the response applies only to an evaluation of the correctness of the payment amount. If the evaluation indicates that the payment amount is incorrect, the intermediary or carrier must send a notice to that effect to the provider or supplier within the 120-day period. Once a timely notice has been sent, the intermediary or carrier may determine the precise amount of the overpayment and initiate recovery procedures without regard to the 120-day limitation.

(f) *When a provider or a supplier is considered to be not without fault.* There are some circumstances when a provider or a supplier will never be without fault. A provider or a supplier is not without fault if any of the following conditions exist:

(1) It did not exercise reasonable care in billing for and accepting payment, in accordance with criteria specified in paragraph (b) of this section.

(2) It accepted a Medicare payment that it knew, or could reasonably have been expected to know, was in excess of amounts payable under the Medicare statute and regulations, as determined by criteria specified in paragraph (c) of this section.

(3) It has already been determined, in accordance with the limitation on liability provisions of section 1879 of the Act and § 411.406 of this chapter, that the provider or the supplier knew, or could reasonably have been expected to know, that the specific items or services (for which a without fault determination is being made) would not be paid for by Medicare.

(4) The overpayment resulted from a payment that did not conform to the applicable published schedule payment amount, as explained in paragraph (h)(2) of this section.

(5) The overpayments resulted from payment for noncovered services that were a part of a pattern of billing for similar services that the provider or the supplier knew or should have known were noncovered.

(6) The overpayment resulted from the failure of the provider or the supplier, in making a claim for payment, to comply with a provision of subpart C of part 424 of this chapter.

(7) The overpayment resulted from a payment by a workers' compensation plan, a liability or no-fault insurer, or group health plan for the same service paid for by Medicare.

(8) Fraud or similar fault has been determined. Similar fault includes situations when a provider or supplier obtains a provider number from a carrier

or intermediary while excluded from the Medicare program and when a provider or supplier hires and seeks reimbursement for services performed by excluded individuals.

(g) *Overpayments that result from Medicare provider cost report errors.* The without fault provisions in this section do not apply to overpayments that result from aggregate payment issues, such as Medicare provider cost report errors.

(h) *Special rule for physician fee schedule and prospective payment system (PPS) diagnosis-related group (DRG) schedule and Medicare fee or rate schedule amounts.* HCFA publishes fee schedules that establish payment amounts for physician services and rates of payment for services furnished under the hospital PPS as indicated by a specific DRG. Other fee schedules or rates of payment may be established from time to time. Except as provided in paragraph (h)(1) of this section, the final publication of these payment amounts in official source documents is evidence that a provider or a supplier could have been expected to know that the payment amount was in excess of amounts payable under the Medicare statute and regulations, as specified in paragraph (c)(1)(i) of this section.

(1) In the case of an error in a schedule of payment amounts published in the **Federal Register** (for which no correction notice has been published), a provider or a supplier that can show, based on criteria specified in paragraphs (c)(1)(ii) or (c)(1)(iii), (c)(2), and (c)(3) of this section, that it did not know, and could not have been expected to know, that a Medicare payment based on the erroneous published schedule of payment amounts was in excess of amounts payable under the Medicare statute and regulations, is without fault with respect to the resulting overpayment.

(2) When an overpayment occurs because a payment does not conform to the applicable published schedule, a provider or a supplier is not without fault.

(i) *Without fault presumption: Three-year rule.* In accordance with section 1870(b) of the Act, if HCFA determines that more than the correct amount was paid to a provider or supplier, and this determination was made after the third calendar year following the year in which the notice was sent to the provider or supplier that payment had been made (or, in the case of Part A benefits, approved), the overpaid provider or supplier is considered without fault unless one of the following conditions exist:

(1) The overpayment resulted from a payment that did not conform to the applicable published schedule payment amount, as explained in paragraph (h)(2) of this section.

(2) The overpayment resulted from payment for noncovered services that were a part of a pattern of billing for similar services that the provider or the supplier knew, or should have known, were noncovered.

(3) The overpayment resulted from the failure of the provider or the supplier, in making a claim for payment, to comply with a provision of subpart C of part 424 of this chapter.

(4) The overpayment resulted from a payment by a workers' compensation plan, a liability or no-fault insurer, or group health plan for the same service paid for by Medicare.

(5) The overpayment resulted from fraud or similar fault. Similar fault includes situations when a provider or supplier obtains a provider number from a carrier or intermediary while excluded from the Medicare program and when a provider or supplier hires and seeks reimbursement for services performed by excluded individuals.

§ 401.326 When a provider or a supplier is relieved of liability.

A provider or a supplier is relieved of liability for refunding an overpayment when it is found to be without fault under the criteria in this subpart. When a provider or a supplier is determined to be without fault, liability for the overpayment shifts to the individual. See § 401.340 (concerning the liability of an individual).

§ 401.329 Recovery of overpayment from providers or suppliers: General rule.

When it is determined that a provider or a supplier is liable for an overpayment, HCFA uses the following methods to recover the overpayment:

(a) Direct collection.

(b) Recoupment or offset against any monies that HCFA owes the provider or supplier.

(c) Offset against a Federal tax refund under authority of 31 U.S.C. 3720A.

Medicare Debts Arising From an Overpayment to an Individual

§ 401.340 Liability of an individual.

(a) *Direct payment imputed.* In accordance with section 1870(a) of the Act, a Medicare payment made to a provider or a supplier with respect to any item or service furnished to an individual is considered as if it were a payment to the individual.

(b) *Scope of individual's potential liability.* In accordance with section 1870(b) of the Act, subject to the provisions in §§ 401.346 through 401.352, an individual is liable for an overpayment if any of the following situations occur:

(1) An amount is paid to an individual that is more than the amount payable under the Medicare statute and regulations.

(2) An amount is paid to a provider or a supplier for items or services furnished to the individual that is more than the amount payable under the Medicare statute and regulations, and HCFA determines that—

(i) The overpayment cannot be recouped from the provider or the supplier within a reasonable period of time; or

(ii) The provider or the supplier was without fault, as described in § 401.323, with respect to the overpayment.

(3) Payment was made to a provider for items and services furnished to an individual under the provisions described in section 1814(e) of the Act (''Payment for Inpatient Hospital Services Prior to Notification of Noneligibility'').

§ 401.343 Overpayment limitation for the individual.

If an overpayment has been made to a provider or a supplier, the individual is liable only to the extent that he or she has benefited from that payment, for example, when the Medicare payment exceeds the charges for which the individual was legally responsible.

§ 401.346 Recovery of overpayment from the individual.

If an individual is liable for an overpayment (that is, a payment described in § 401.340(b)), recovery, to the extent of the liability, is made in one of the following ways:

(a) By direct collection against the individual (or his or her estate if the individual has died).

(b) By adjustment of title II or railroad retirement benefits, in accordance with section 1870(b)(3) and 1870(b)(4) of the Act, in one of the following ways:

(1) By decreasing any payment under title II of the Act or under the Railroad Retirement Act of 1974 (45 U.S.C. 231) to which the individual is entitled.

(2) By decreasing, if the individual has died before recovery is completed, any payment under title II of the Act or under the Railroad Retirement Act of 1974 that is based on the individual's earnings record (or compensation) and payable to the individual's estate or to any other person.

(c) By offset against a Federal tax refund under authority of 31 U.S.C. 3720A.

(d) By applying the requirements and procedures that implement the Federal

Claims Collection Act (FCCA) (31 U.S.C. 3711) with respect to Medicare payments and the general FCCA regulations set forth at § 401.387 and subpart F of this part. If HCFA's regulations fail to address a particular issue, refer to 45 CFR part 30.

§ 401.349 Adjustment against an individual's title II or railroad retirement benefits.

(a) *Certification of amount that will be adjusted.* In accordance with section 1870(b) of the Act, as soon as practicable after any adjustment against an individual's title II or railroad retirement benefits is determined to be necessary, HCFA certifies to SSA the amount of the overpayment or payment with respect to which the adjustment is to be made. If the adjustment is to be made by decreasing subsequent payments under the railroad retirement benefits, the certification is made to the Railroad Retirement Board.

(b) *Procedures for recovery by adjustment of benefits.*

(1) The procedures applied in making an adjustment to title II benefits are the applicable procedures of 20 CFR 404.502.

(2) The procedures applied in making an adjustment to railroad retirement benefits are the applicable procedures of 20 CFR part 367.

§ 401.352 Waiver of recovery of overpayment from individuals.

(a) The provisions of § 401.346 are not applied and there is no recovery of an overpayment made under § 401.340(b) if—

(1) The overpayment has been made with respect to an individual who is without fault, as specified in § 401.355, or the recovery would be made by decreasing payment to which another person who is without fault is entitled, as provided in section 1870(c) of the Act; and (2) The recovery would either—

(i) Defeat the purposes of title II or title XVIII of the Act, as specified in § 401.358; or

(ii) Would be against equity and good conscience, as specified in § 401.361.

(b) An individual desiring a waiver of recovery of an overpayment must request the waiver within 60 days from the date on the written notification from HCFA that he or she is liable for the overpayment.

(c) A waiver granted in accordance with § 401.358 or § 401.361 may be granted partially or in full.

(d) HCFA determines whether waiver of recovery of an overpayment for which an individual is liable under this subpart will be granted.

(e) A waiver of recovery of an overpayment may be granted to a deceased individual's estate if all of the following conditions exist:

(1) The estate and the deceased individual are without fault.

(2) The deceased individual is survived by a title II dependent.

(3) Recovery of the overpayment from the estate would be made by decreasing payments to the title II-dependent. (4) The recovery would defeat the purposes of title II or title XVIII, as defined in § 401.358, or would be against equity and good conscience, as defined in § 401.361.

§ 401.355 Determining without fault for an individual.

(a) *General.* In accordance with section 1870(c) of the Act, a determination of without fault pertains to the liability of the individual. Even when HCFA's actions cause or contribute to the overpayment, that fact does not relieve the individual from liability for repayment if the individual is not without fault. In determining whether a individual is without fault, HCFA considers all pertinent circumstances, including the individual's age, intelligence, education, and physical and mental condition. (See § 401.364(d) for application of without fault for an individual with respect to a Medicare payment in an MSP situation.)

(b) *Reasonable care standard.* An individual is considered without fault with respect to an overpayment made to him or her, or to a provider or a supplier on his or her behalf, if the individual has exercised reasonable care in requesting and accepting Medicare payment. The individual, or other person acting on behalf of the individual, has exercised reasonable care when he or she has—

(1) Accepted a payment that the individual, or other person acting on behalf of the individual, did not know, or could not reasonably have been expected to know, was incorrect;

(2) Accepted a payment because of reliance on erroneous written information from an official source within HCFA, SSA, or a Medicare intermediary or carrier with respect to the interpretation of a pertinent provision of the Act or implementing regulations; or

(3) Made a reasonable assumption, based on available information including, but not limited to, Medicare instructions and regulations, that the payment was correct.

(c) *When an individual is considered to be not without fault.* There are some circumstances in which an individual will never be without fault. An individual is considered to be not without fault for an overpayment when the individual, or other person acting on behalf of the individual, has—

(1) Received prior written notice that a particular item or service was not covered or paid for by Medicare;

(2) Made an incorrect statement or withheld information to obtain benefits that were not due the individual;

(3) Accepted a payment that he or she knew or should have known was not due; or

(4) Received a prior determination, in accordance with the limitation on liability provisions in section 1879 of the Act and § 411.404 of this chapter, that he or she knew, or could reasonably have been expected to know, that the specific items or services (for which a without fault determination is being made) would not be paid for by Medicare.

§ 401.358 Defeat the purposes of title II or title XVIII of the Act.

(a) *General.* The standard of defeat the purposes of title II or title XVIII, contained in section 1870(c) of the Act, means that recovery of all or part of the overpayment frustrates the purposes of benefits under these titles by depriving an individual (or surviving title II dependent) of income required for ordinary and necessary living expenses.

(b) *Ordinary and necessary living expenses.* For purposes of this subpart, an individual's ordinary and necessary living expenses include the following expenses:

(1) Current living expenses, such as food and clothing, rent, mortgage payments, utilities, maintenance, insurance (for example, life, accident, and health insurance, including premiums for Supplementary Medical Insurance benefits under title XVIII and premiums for Medigap insurance), taxes, and installment payments.

(2) Current medical, hospitalization, and other related expenses not covered by Medicare or another insurer.

(3) Expenses for the support of others for whom the individual is legally responsible.

(4) Other miscellaneous expenses that may reasonably be considered necessary to maintain the individual's current standard of living.

(c) *Example.* An individual entitled to Medicare, who was also receiving title II benefits, was injured in a slip and fall accident. He pursued a liability suit and received a settlement. However, after a pro rata share of procurement costs were deducted, he was left with an amount that was smaller than, or close to, Medicare's claim amount. As a result of expenses related to the accident, he has a monthly budgetary shortfall and does not have savings. In

addition, the individual has out-of-pocket medical expenses. If Medicare were to recover the overpayment by adjusting the individual's title II benefit, he would be deprived of income necessary for ordinary and necessary living expenses. Assuming that the individual is without fault, his liability for the overpayment may be waived partially or in full based on financial hardship. (The fact that the individual is left with a settlement amount that is smaller, or close to, what Medicare would recover does not automatically permit waiver of the recovery under this regulation. The final determination would depend on the total amount of the individual's settlement and his other financial circumstances.)

§ 401.361 Equity and good conscience.

(a) *General rule.* The standard of equity and good conscience, contained in section 1870(c) of the Act, is applied to title XVIII overpayment recoveries using broad concepts of fairness and reviewing the totality of an individual's circumstances in each particular case.

(b) *Factors to be considered.* In applying the standard of equity and good conscience, factors to consider include, but are not limited to, the following:

(1) The amount of the overpayment.

(2) The size of a liability settlement and the amount the individual would retain if Medicare recovered.

(3) The degree to which recovery would cause undue hardship on the individual.

(4) The degree to which Medicare and/or its contractors contributed to causing the overpayment.

(5) The degree to which the individual contributed to causing the overpayment (even if determined to be without fault in accordance with § 401.355.

(6) The impact of an accident on the individual both physically and financially.

(7) Whether the individual would be unjustly enriched by a waiver of recovery.

(8) If the individual is responsible for noncovered accident-related out-of-pocket expenses and/or future accident-related expenses, whether it would be equitable for Medicare to reduce its recovery.

(9) Whether the individual made a personal financial decision based on his or her reliance on erroneous information supplied to the individual by Medicare or SSA, and recovery would change the individual's position to his or her material detriment.

(c) *Examples in which waiver of recovery is being sought based on the concepts involved with equity and good conscience.* Assuming that the individual is without fault in accordance with § 401.355, the following examples illustrate situations in which waiver of recovery is sought based on the concepts involved with equity and good conscience and how those concepts are to be applied. The purpose of these examples is to illustrate both the application of the basic principles of the equity and good conscience standard and that each individual case must be evaluated on the basis of its particular facts and circumstances.

Example 1

Facts: As a result of an accident, an individual's leg was amputated below the knee, and he was confined to a nursing home. He filed suit for the injuries and damages he suffered as a result of the accident. The settlement he received was just a few hundred dollars more than Medicare's claim amount (after a pro rata share of procurement costs were deducted). The individual has substantial outstanding medical bills that will not be reimbursed by Medicare or another insurer.

Analysis: In determining whether waiver may be granted on the basis of equity and good conscience, HCFA may take into consideration that the accident has had a significant impact on the individual, both physically and financially, in that he must not only deal with the physical trauma of the leg amputation, but also with being confined to the nursing home with its resultant increased nursing care costs. In addition, the individual will retain only a few hundred dollars of his settlement if Medicare seeks full recovery, and will still have substantial remaining medical bills he will be responsible to pay. This situation could cause undue hardship for the individual.

Action: Given the significant impact that the accident has had on the individual, both physically and financially, HCFA may find that it is against equity and good conscience to recover and may grant a full waiver.

Example 2

Facts: As a result of an accident, a 26-year-old individual is rendered a ventilator-dependent quadriplegic. (The individual was eligible for Medicare prior to the accident because of a disabling condition that occurred several years ago; however, he had been able to care for himself without outside assistance.) The individual pursued a liability claim after the accident and received a settlement that was twice the amount of Medicare's potential claim (after a pro rata share of procurement costs were deducted). The individual needs all of his income and settlement proceeds to finance 24-hour nursing care, upon which he will be totally dependent for the remainder of his lifetime, and to enable him to live independently (outside of an institution). In addition, the individual will have future unavoidable accident-related expenses that will not be reimbursed by Medicare or another insurer.

Analysis: In determining whether waiver may be granted on the basis of equity and good conscience, several factors involved in this case should be considered. The individual's young age should be considered as it relates to the expense of being totally dependent on 24-hour nursing care for the remainder of his lifetime. Moreover, he is a ventilator-dependent quadriplegic. Additionally, although he received a settlement that was twice the amount of Medicare's potential recovery, he has substantial accident-related expenses and is likely to have future out-of-pocket expenses that will not be covered by Medicare or another insurer.

Action: HCFA may find that it is against equity and good conscience to recover, and grant full waiver based on the various factors involved in this case. Although the settlement received by the individual is more than Medicare's potential recovery, consideration must be given to the extent of his disability, his need for lifetime 24-hour nursing care, and the future accident-related expenses he is likely to incur.

Example 3

Facts: After being notified in writing by an SSA official that she was eligible for title II and title XVIII benefits, the individual dropped her existing health insurance based on the prospect of receiving health insurance coverage under Medicare. One year later, it was discovered that, due to an error by SSA, her eligibility status was erroneous because she did not have enough qualifying quarters of covered employment under the Act to obtain the required insured status. During that year, the individual was hospitalized, and a significant amount of Medicare benefits was paid on her behalf. Because the individual dropped her previous health insurance coverage, Medicare was her only source of health care coverage during this time. The individual's financial situation is such that recovery of the overpayment would change her financial position for the worse.

Analysis: In determining whether waiver may be granted on the basis of equity and good conscience, HCFA may consider several factors. The fact that the individual made a personal financial

decision based on her reliance on erroneous information supplied by SSA warrants significant consideration. This, in turn, raises the question of whether recovery would change the individual's position to her material detriment, as well as the degree to which she contributed to the overpayment. Since she did not know that she was not entitled to receive the Medicare services (and, in fact, was told otherwise by SSA), it appears that she did nothing to actually contribute to the overpayment other than avail herself of services to which she believed she was entitled.

Action: In this situation, recovery may be waived as against equity and good conscience because the individual, based on erroneous information provided by SSA, relinquished her right to payment from another source, and recovery would change her position to her material detriment.

Example 4

Facts: An individual sustained injuries in an automobile accident that rendered her incapable of operating a motor vehicle unless the vehicle was modified for use by a handicapped person. Medicare made conditional payments on the individual's behalf. The individual filed suit for the injuries and damages she suffered as a result of the accident and received a settlement that was about equal to the amount of Medicare conditional payments made on her behalf. The individual submitted documentation demonstrating that all of the money she received in the settlement was used to purchase a modified vehicle required as a result of the accident and requested a waiver of recovery of the overpayment.

Analysis: If Medicare seeks full recovery, the individual will likely have to sell her modified vehicle to repay Medicare. This modified vehicle is necessary because of the injuries she sustained in the accident and, like the car in which she had the accident, is her only means of transportation. Selling the modified vehicle to repay Medicare would cause her to be without transportation and would place her in a worse position than before the accident. Based on this consideration, and the significant physical impact that the accident has had on the individual, recovery of the overpayment may be against equity and good conscience.

Action: HCFA may grant a waiver in an amount equal to the cost of the vehicle and, based on the various factors involved in this case, including the fact that all of the money she received in the settlement was used to purchase the modified vehicle, could be justified in waiving an additional amount. If the cost of the modified vehicle were less than the settlement amount, HCFA could grant a partial waiver up to the cost of the vehicle.

Note: Using the settlement money to purchase a vehicle was considered appropriate only because the individual required a modified vehicle as a result of her accident. It would be inappropriate to grant waiver simply because the individual chose to purchase another car from the proceeds.

Example 5

Facts: An individual sustained multiple injuries in an automobile accident that caused him to be away from his job (without pay) for 4 months. His monthly income just equals his monthly expenses. The individual received a liability settlement that was about equal to Medicare's potential claim (after a pro rata share of procurement costs were deducted). However, he incurred significant accident-related out-of-pocket medical expenses.

Analysis: In determining whether waiver may be granted on the basis of equity and good conscience, HCFA may take into consideration that the accident has caused the individual to lose 4 months of income, and, thus, his ability to absorb the out-of-pocket medical expenses has greatly diminished. If the individual repaid Medicare the total amount owed, he would be left with no funds with which to pay his out-of-pocket medical expenses. Because of this, it may be equitable for Medicare to reduce its recovery due to the individual's responsibility for noncovered out-of-pocket expenses. Therefore, it would be against equity and good conscience for Medicare to recoup its entire potential recovery amount.

Action: HCFA may grant a partial waiver up to the amount of out-of-pocket expenses.

Example 6

Facts: An individual was injured in an accident that triggered Medicare conditional payments. Before the accident, he was experiencing monthly financial difficulties due to expenses that were not related to the accident. Medicare's recovery after reduction for procurement costs is significantly less than the total liability settlement received by the individual. The individual has several thousand dollars worth of injury-related out-of-pocket medical expenses.

Analysis: Although the individual has monthly financial difficulties that appears to constitute a financial hardship, it must be noted that this financial hardship existed before the accident. It is important to remember that repaying Medicare must be the circumstance that causes financial hardship. Pre-existing financial hardship alone is not a sufficient reason to grant waiver. Additionally, after repaying Medicare and reimbursing himself for out-of-pocket expenses, the individual will still retain a significant portion of the settlement proceeds. The repayment of Medicare's claim will not cause undue hardship. All of these factors must be taken into consideration when making a waiver decision that is not unduly favorable or adverse to either side, but is fair to both the individual and to HCFA.

Action: Based on the circumstances presented in this case, the likely outcome is to deny waiver. Although the individual has substantial out-of-pocket expenses, he would not be unduly disadvantaged if Medicare seeks full recovery because he will still retain a significant portion of his settlement after the recovery.

(d) *Special Rule: When recovery of an overpayment from an individual is ordinarily considered inequitable.* (1) Except for MSP obligations, recovery of an overpayment from a without-fault individual is ordinarily considered to be inequitable if the individual did not receive the payment.

(2) For MSP obligations, recovery from a without-fault individual is considered to be inequitable only if the recovery involves a group health plan and the individual did not receive the Medicare payment.

(e) *Deemed to be against equity and good conscience.* In accordance with section 1870(c) of the Act, recovery of an overpayment, or of such part of an overpayment as is determined would be inconsistent with the purposes of title XVIII of the Act, is deemed to be against equity and good conscience when either of the following conditions exist:

(1) The overpayment resulted from expenses incurred for items or services for which payment may not be made under title XVIII by reason of the provisions of section 1862 (a)(1) or (a)(9) of the Act (reasonable and necessary, or custodial care).

(2) HCFA did not determine that the payment was incorrect until after the third year following the year in which the notice of the payment was sent to the individual.

(f) *Equity and good conscience deemed inapplicable.* In considering whether recovery of a Medicare overpayment should be waived, the application of the standard of equity and good conscience is deemed inapplicable in either of the following circumstances:

(1) The individual committed a fraud or misrepresented a material fact that resulted, directly or indirectly, in the overpayment.

(2) The individual's actions or omissions indicate a lack of good faith or the absence of an honest intention to abstain from taking an unfair advantage of Medicare.

§ 401.364 Without fault and Medicare Secondary Payer (MSP) obligations.

(a) *MSP debt defined.* In general, an MSP debt is an amount owed to the United States Government, once a determination and any recovery adjustments are made to an obligation, that resulted from a payment made by Medicare for an identified item or service and payment for the item or service has been made, can reasonably be expected to be made, or, in certain circumstances, can reasonably be expected to be made promptly, by another entity that is required or responsible under section 1862(b) of the Act to make primary payment. HCFA's rules that govern MSP obligations are located at part 411, subparts B through F of this chapter.

(b) *Application of without-fault provisions to MSP obligations—third-party payor or other non-Medicare entity.* The without-fault and related provisions specified in §§ 401.323 and 401.326 (with respect to providers and suppliers) and in §§ 401.352, 401.355, 401.358, and 401.361 (with respect to individuals entitled to Medicare) do not apply to MSP obligations for which a third-party payer or other non-Medicare entity is liable. A provision in a contract to which a third-party payer or other non-Medicare entity is a party, or a State law provision that governs the relations between the third-party payer or other non-Medicare entity and an individual entitled to Medicare, that gives or purports to give any right of subrogation to the third-party payer or other non-Medicare entity does not confer a right to without-fault consideration for an obligation for which the third-party payer or other non-Medicare entity is responsible.

(c) *Application of without-fault provisions to MSP obligations—providers and suppliers.* In general, a provider or a supplier is not without fault with respect to a Medicare payment in an MSP situation unless it complied with all of the requirements specified in part 411 of this chapter and, in the case of providers, part 489 of this chapter.

(d) *Application of without-fault provisions to MSP obligations—individuals.* (1) In general, an individual is without fault with respect to a Medicare payment in an MSP situation except when the individual (or the individual's representative)—

(i) Fails to give notice as required by § 411.23(a)(1) of this chapter (that is, notice that a claim has been filed with an entity that may be primary to Medicare) to the intermediary or carrier within 60 days of filing the claim;

(ii) Fails to give notice as required by § 411.23(a)(2) of this chapter (that is, notice of receipt of a payment from an entity that is primary to Medicare) to HCFA within 30 days of receipt of a payment;

(iii) Fails to file a proper claim, as defined in § 411.21 of this chapter, with an entity that is primary to Medicare for the item or service for which no proper claim was filed, subject to the recovery provisions in §§ 411.24(l) and 411.32(c) of this chapter;

(iv) Makes an incorrect statement or withholds information to obtain benefits that are not due him or her; or

(v) Accepts a payment that he or she clearly should have known was not due.

(2) An individual who is without fault according to paragraph (d)(1) of this section may have recovery of an MSP obligation (either by adjustment of his or her social security benefit or by direct recovery) waived if the recovery would either—

(i) Defeat the purposes of title II or title XVIII of the Act, as specified in § 401.358; or

(ii) Would be against equity and good conscience, as specified in § 401.361 (a) through (c), (e), and (f).

(3) An individual desiring a waiver of recovery of an MSP obligation must request the waiver within 60 days from receipt of written notification from HCFA that he or she is liable for the obligation.

(4) HCFA may waive recovery, in whole or in part, in accordance with § 401.358 or § 401.361 (a) through (c), (e), and (f) of this subpart.

§ 401.367 Initial determination.

Each of the following determinations is an initial determination for purposes of §§ 405.704(b), 405.704(c), and 405.803(b) of this chapter, as applicable, and the entities are parties for purposes of §§ 405.708 and 405.805 of this chapter:

(a) A determination that a provider or supplier must repay an overpayment because the provider or supplier is not without fault.

(b) A determination that an individual (or the estate of an individual), does not qualify for waiver of adjustment or recovery of overpayments because the individual is, or the estate and the individual are, not without fault.

(c) A determination, with respect to an individual that is (or an estate and individual that are) without fault, that the individual (or estate) does not qualify for waiver of adjustment or recovery of overpayments on the basis that the purposes of title II or of title XVIII of the Act would be defeated, as described in § 401.358.

(d) A determination, with respect to an individual that is (or an estate and individual that are) without fault, that the individual (or estate) does not qualify for waiver of adjustment or recovery of overpayments on the basis that recovery would be against equity and good conscience, as described in § 401.361.

§ 401.370 Liability of certifying or disbursing officer.

No certifying or disbursing officer is liable for any amount certified or paid by him or her to a provider or supplier in either of the following situations:

(a) The amount is waived under the provisions of this subpart.

(b) Recovery is not completed prior to the death of all persons against whose benefits the recovery is authorized.

Suspension of Payment to Providers and Suppliers and Collection and Compromise of Overpayments

§§ 401.375—401.390 [Reserved]

Interest

§ 401.393 [Reserved]

Repayment of Scholarships and Loans

§ 401.396 [Reserved]

B. Part 401, subpart F, is amended as follows:

Subpart F—Claims Collection and Compromise

1. In § 401.601, paragraphs (d)(2)(ii) and (d)(2)(iii) are revised to read as follows:

§ 401.601 Basis and scope.

* * * * *

(d) *Related regulations.* * * *

(2) *HCFA regulations.* * * *

(ii) Adjustments in railroad retirement or social security benefits to recover Medicare overpayments to individuals are covered in §§ 401.310 through 401.340.

(iii) Claims against providers and suppliers for overpayments under Medicare and for assessment of interest are covered in §§ 401.387 and 401.393.

* * * * *

2. In § 401.607, paragraph (d)(2) is revised to read as follows:

§ 401.607 Claims collection.

* * * * *

(d) *Collection by offset.* * * *

(2) Under regulations at §§ 401.310 through 401.340, HCFA may initiate adjustments in program payments to which an individual is entitled under title II (Federal Old-Age, Survivors, and Disability Insurance Benefits) of the Act or under the Railroad Retirement Act of 1974 (45 U.S.C. 231) to recover Medicare overpayments.

C. Part 405 is amended as set forth below:

PART 405—FEDERAL HEALTH INSURANCE FOR THE AGED AND DISABLED

1. The authority citation for subpart C continues to read as follows:

Authority: Sections 1102, 1815, 1833, 1842, 1866, 1870, 1871, 1879, and 1892 of the Social Security Act (42 U.S.C. 1302, 1395g, 1395l, 1395u, 1395cc, 1395gg, 1395hh, 1395pp, and 1395ccc) and 31 U.S.C. 3711.

2. The following sections are redesignated as part 401, subpart D as shown in the table below:

Old section—	New section—
405.370	401.375
405.371	401.378
405.372	401.381
405.373	401.384
405.374	401.387
405.375	401.390
405.376	401.393
405.377	401.394
405.378	401.395
405.380	401.396

3. Subpart C, is further amended by removing the undesignated centered headings and §§ 405.301 through 405.359, and subpart C is reserved.

Subpart G—Reconsiderations and Appeals Under Medicare Part A

4. Subpart G is amended as follows:

a. The authority citation for subpart G continues to read as follows:

Authority: Secs. 1102, 1151, 1154, 1155, 1869(b), 1871, 1872, and 1879 of the Social Security Act (42 U.S.C. 1302, 1320c, 1320c–3, 1320c–4, 1395ff(b), 1395hh, 1395ii, and 1395pp).

b. In § 405.704, the section heading and the introductory text of paragraph (c) are revised, and a new paragraph (c)(3) is added, to read as follows:

§ 405.704 Actions that are initial determinations.

* * * * *

(c) *Initial determination with respect to a provider.* An initial determination with respect to a provider is a determination made on the basis of the request for payment filed by the provider under Part A of Medicare on behalf of an individual who was furnished items or services by the provider, but only if the determination involves the following:

* * * * *

(3) A determination by HCFA that a provider must repay an overpayment because the provider is not without fault as that term is described in § 401.323 of this chapter.

Subpart H—Appeals Under the Medicare Part B Program

5. Subpart H is amended as follows:

a. The authority citation for subpart H is revised to read as follows:

Authority: Secs. 1102, 1842(b)(3)(C), and 1869(b) of the Social Security Act (42 U.S.C. 1302, 1395u(b)(3)(C), and 1395ff(b)).

b. In § 405.803, paragraph (b) is revised to read as follows:

§ 405.803 Initial determination.

* * * * *

(b) An initial determination for purposes of this subpart includes, among others, the following determinations:

(1) Whether the items and services furnished are covered.

(2) Whether an individual deductible has been met.

(3) Whether a receipted bill or other evidence of payment is acceptable.

(4) Whether the charges for items or services furnished are reasonable.

(5) For items or services furnished an individual by a supplier in accordance with an assignment under § 424.55 of this chapter, that are not covered by reason of § 411.15(g) or § 411.15(k) of this chapter, whether the individual or supplier knew, or could reasonably have been expected to know, that the items or services were excluded from coverage.

(6) A determination that a supplier must repay an overpayment because the supplier is not without fault as that term is described in § 401.323 of this chapter.

(7) A determination that an individual, or the estate of the individual, does not qualify for waiver of adjustment or recovery of overpayments because the individual is, or the estate and the individual are, not without fault as that term is described in § 401.355 of this chapter.

(8) A determination, with respect to an individual that is (or an estate and individual that are) without fault, that the individual (or estate) does not qualify for waiver of adjustment or recovery of overpayments on the basis that recovery would defeat the purposes of title II or of title XVIII of the Act, as described in § 401.358 of this chapter.

(9) A determination, with respect to an individual that is (or an estate and individual that are) without fault, that the individual (or estate) does not qualify for waiver of adjustment or recovery of overpayments on the basis that recovery would be against equity and good conscience, as described in § 401.361 of this chapter.

* * * * *

c. Section 405.805 is revised to read as follows:

§ 405.805 Parties to the initial determination.

The parties to the initial determination (see § 405.803) may be any party described in § 405.802(b). A party may also be any supplier as defined at § 400.202 of this chapter that has been determined to be not without fault as that term is described in § 401.323 of this chapter, with respect to that issue only.

D. Part 411 is amended as set forth below:

PART 411—EXCLUSIONS FROM MEDICARE AND LIMITATIONS ON MEDICARE PAYMENT

1. The authority citation for part 411 continues to read as follows:

Authority: Secs. 1102 and 1871 of the Social Security Act (42 U.S.C. 1302 and 1395hh).

2. Section 411.23 is revised to read as follows:

§ 411.23 Individual's cooperation.

If HCFA makes conditional payments, the individual must do the following:

(a) Cooperate in notifying HCFA of the progress and final outcome of the liability claim, including, but not limited to—

(1) Notifying the intermediary or carrier within 60 days of filing a claim with an entity that may be primary to Medicare; and

(2) Notifying HCFA within 30 days of the receipt of a payment from the entity that is primary to Medicare.

(b) Cooperate in the recovery action.

3. Section 411.28 is revised to read as follows:

§ 411.28 Waiver of recovery and compromise of claims.

(a) HCFA may waive recovery, in whole or in part, if HCFA determines that waiver is in the best interest of the Medicare program.

(b) General rules applicable to compromise of claims are set forth in subpart F of part 401 of this chapter.

(c) Other rules pertinent to recovery are contained in subpart D of part 401 of this chapter.

E. Part 466 is amended as set forth below:

PART 466—UTILIZATION AND QUALITY CONTROL REVIEW

1. The authority citation for part 466 continues to read as follows:

Authority: Secs. 1102 and 1871 of the Social Security Act (42 U.S.C. 1302 and 1395hh).

2. In § 466.86, new paragraph (a)(5) is added to read as follows:

§ 466.86 Correlation of Title XI functions with Title XVIII functions.

(a) Payment determinations. * * *

(5) A finding by the PRO that the provider or supplier is not without fault, as that term is described in § 401.323 of this chapter, with respect to an overpayment, is conclusive for payment purposes.

* * * * *

3. In § 466.94, paragraph (c)(6) is redesignated as paragraph (c)(7), and a new paragraph (c)(6) is added to read as follows:

§ 466.94 Notice of PRO initial denial determination and changes as a result of a DRG validation.

* * * * *

(c) Content of the notice. * * *

(6) If applicable, a statement about the without fault determination as that term is described in § 401.323 of this chapter.

* * * * *

F. Part 473 is amended as set forth below:

PART 473—RECONSIDERATIONS AND APPEALS

1. The authority citation for part 473 continues to read as follows:

Authority: Secs. 1102 and 1871 of the Social Security Act (42 U.S.C. 1302 and 1395hh).

2. In § 473.14, paragraph (c)(2) is revised to read as follows:

§ 473.14 Applicability.

* * * * *

(c) *Nonapplicability of rules to related determinations.* * * *

(2) Without fault determinations with respect to overpayments are made under section 1870 of the Act, and limitation on liability determinations on excluded coverage of certain services are made under section 1879 of the Act. Initial determinations under sections 1870 and 1879 and further appeals are governed by the reconsideration and appeal procedures in part 405, subpart G of this chapter for determinations under Medicare Part A, and part 405, subpart H of this chapter for determinations under Medicare Part B. References in those subparts to initial and reconsidered determinations made by HCFA should be read to mean initial and reconsidered determinations made by a PRO.

G. Technical Amendments.

§ 401.378 [Amended]

1. Redesignated § 401.378 is amended as follows:

a. In paragraph (b), the citations ''§ 405.372'' and ''§ 405.373'' are removed, and the citations ''§ 401.381'' and ''§ 401.384'', respectively, are added in their place.

b. In paragraph (c), the citations ''§ 405.372'' and ''§ 405.372(a)(2)'' are removed, and the citations ''§ 401.381'' and ''§ 401.381(a)(2)'', respectively, are added in their place.

§ 401.381 [Amended]

2. Redesignated § 401.381 is amended as follows:

a. In paragraph (a)(1), the citation ''§ 405.371(a)(1)'' is removed and the citation ''§ 401.378(a)(1)'' is added in its place.

b. In paragraph (a)(2), the citation ''§ 405.371(c)'' is removed and the citation ''§ 401.378(c)'' is added in its place.

c. In paragraph (b)(1), the citations ''§ 405.374'' and ''§ 405.375'' are removed and the citations ''§ 401.387'' and ''§ 401.390'', respectively, are added in their place.

d. In paragraph (e), the citations ''§ 405.371(b)'' and ''§ 405.378'' are removed and the citations ''§ 401.378(b)'' and ''§ 401.395'', respectively, are added in their place.

3. Redesignated § 401.384 is amended as follows:

a. In paragraph (a) introductory text, the citation ''§ 405.371(a)(2)'' is removed and the citation ''§ 401.378(a)(2)'' is added in its place.

b. In paragraph (a)(2), the citation ''§ 405.374'' is removed and the citation ''§ 401.387'' is added in its place.

c. In paragraph (c), the citations ''§ 405.374'' and ''§ 405.375'' are removed and the citations ''§ 401.387'' and ''§ 401.390'', respectively, are added in their place.

§ 401.387 [Amended]

4. In redesignated § 401.387, paragraph (a), the citations ''§ 405.372'' and ''§ 405.373'' are removed and the citations ''§ 401.381'' and ''§ 401.384'', respectively, are added in their place.

§ 401.390 [Amended]

5. In redesignated § 401.390, paragraph (a), the citations ''§ 405.374'' and ''§ 405.372(b)(2)'' are removed and the citations ''§ 401.387'' and ''§ 401.381(b)(2)'', respectively, are added in their place.

§ 401.394 [Amended]

6. In redesignated § 401.394, paragraph (e) introductory text, the citation ''§ 405.374'' is removed and the citation ''§ 401.387'' is added in its place.

§ 401.601 [Amended]

7. In § 401.601, the following changes are made:

a. In paragraph (d)(2)(ii), the phrase ''§§ 405.350–405.356 of this chapter'' is removed, and the citation ''§ 401.305'' is added in its place.

b. In paragraph (d)(2)(iii), the phrase ''§§ 405.374 and 405.376 of this chapter'' is removed, and the phrase ''§§ 401.387 and 401.393'' is added in its place.

§ 401.607 [Amended]

8. In § 401.607, in paragraph (d)(2), the phrase ''§§ 405.350–405.358 of this chapter'' is removed, and the phrase ''§§ 401.346 and 401.349'' is added in its place.

PART 403—RECOGNITION OF STATE REIMBURSEMENT CONTROL SYSTEMS

9. The authority citation for part 403 continues to read as follows:

Authority: Secs. 1102 and 1871 of the Social Security Act (42 U.S.C. 1302 and 1395hh).

§ 403.310 [Amended]

10. In § 403.310, in paragraph (a), the citation ''§ 405.378'' is removed, and the citation ''§ 401.395'' is added in its place.

§ 405.705 [Amended]

11. In § 405.705, in paragraph (d), the citation ''§ 405.376'' is removed, and the citation ''§ 401.393 of this chapter'' is added in its place.

§ 405.1801 [Amended]

12. In § 405.1801, in paragraph (a), under the definition ''Intermediary determination,'' in paragraph (4), the citation ''§ 405.376'' is removed, and the citation ''§ 401.393 of this chapter'' is added in its place.

§ 405.1803 [Amended]

13. In § 405.1803, in paragraph (c), the citation ''405.373'' is removed, and the citation ''§ 401.384(a) of this chapter'' is added in its place.

PART 410—SUPPLEMENTARY MEDICAL INSURANCE (SMI) BENEFITS

14. The authority citation for part 410 continues to read as follows:

Authority: Secs. 1102 and 1871 of the Social Security Act (42 U.S.C. 1302 and 1395hh).

§ 410.1 [Amended]

15. In § 410.1, in paragraph (b), the phrase ''subpart C of part 405 of this chapter'' is removed, and the phrase ''Subpart D of Part 401 of this chapter'' is added in its place.

§ 411.28 [Amended]

16. In § 411.28, the following changes are made:

a. In paragraph (b), the citation ''405.376'' is removed, and the citation ''401.393'' is added in its place.

b. In paragraph (c), the phrase ''in subpart C of part 405 of this chapter'' is removed, and the phrase ''in subpart D of part 401 of this chapter'' is added in its place.

PART 413—PRINCIPLES OF REASONABLE COST REIMBURSEMENT; PAYMENT FOR END-STAGE RENAL DISEASE SERVICES

17. The authority citation for part 413 continues to read as follows:

Authority: Secs. 1102, 1861(v)(1)(A), and 1871 of the Social Security Act (42 U.S.C. 1302, 1395x(v)(1)(A), and 1395hh).

§ 413.20 [Amended]

18. In § 413.20, in paragraph (e), the citation ''§ 405.372(a)'' is removed wherever it appears (twice), and the citation ''§ 401.381'' is added in its place.

§ 413.153 [Amended]

19. In § 413.153, the following changes are made:

a. In paragraph (a)(1)(ii), the citation ''§ 405.377'' is removed, and the citation ''§ 401.394'' is added in its place.

b. In paragraph (a)(1)(iii), the citation ''§ 405.378'' is removed, and the citation ''§ 401.395'' is added in its place.

PART 447—PAYMENTS FOR SERVICES

20. The authority citation for part 447 continues to read as follows:

Authority: Sec. 1102 of the Social Security Act (42 U.S.C. 1302).

§ 447.31 [Amended]

21. In § 447.31, in paragraph (a), the citation ''Section 405.377'' is removed, and the citation ''§ 401.394'' is added in its place.

PART 493—LABORATORY REQUIREMENTS

22. The authority citation for part 493 continues to read as follows:

Authority: Sec. 353 of the Public Health Service Act, secs. 1102, 1861(e), the sentence following 1861(s)(11), 1861(s)(12), 1861(s)(13), 1861(s)(14), 1861(s)(15), and 1861(s)(16) of the Social Security Act (42 U.S.C. 1302, 1395x(e), the sentence following 1395x(s)(11), 1395x(s)(12), 1395x(s)(13), 1395x(s)(14), 1395x(s)(15), and 1395x(s)(16).

§ 493.1834 [Amended]

23. In § 493.1834, in paragraph (i)(1)(ii), the citation ''§ 405.378(d)'' is removed, and the citation ''§ 401.395(d)'' is added in its place.

(Catalog of Federal Domestic Assistance Program No. 93.773, Medicare—Hospital Insurance; and Program No. 93,774, Medicare—Supplementary Medical Insurance Program)

Dated: January 8, 1998.

Nancy-Ann Min DeParle,

Administrator, Health Care Financing Administration.

Dated: January 20, 1998.

Donna E. Shalala,

Secretary.

[FR Doc. 98–4230 Filed 3–24–98; 8:45 am]

BILLING CODE 4120–01–U

federal register

Wednesday
March 25, 1998

Part III

Federal Reserve System

12 CFR Part 205

Electronic Fund Transfers; Final Rule

12 CFR Part 230 et al.

Truth in Savings, Consumer Leasing, Truth in Lending, Equal Credit Opportunity, Electronic Fund Transfers; Proposed Rules

FEDERAL RESERVE SYSTEM

12 CFR Part 205

[Regulation E; Docket No. R–1002]

Electronic Fund Transfers

AGENCY: Board of Governors of the Federal Reserve System.

ACTION: Interim rule with request for comments.

SUMMARY: The Board is publishing an interim rule amending Regulation E, which implements the Electronic Fund Transfer Act (EFTA). The EFTA establishes certain rights, liabilities, and responsibilities of participants involved in electronic fund transfers (EFTs) to and from consumer asset accounts. Among other things, the act and regulation require disclosures about the terms and conditions of EFT services, account activity, error resolution, and authorizations or confirmations concerning EFTs. These disclosures must generally be provided in writing. In May 1996, the Board issued a proposed rule permitting financial institutions to satisfy the requirement that certain disclosures and other information be in writing by sending information electronically subject to certain requirements. The interim rule allows depository institutions or other entities subject to the act to deliver by electronic communication any of these disclosures and other information required by the act and regulation, as long as the consumer agrees to such delivery. For purposes of the regulation, an electronic communication is a message transmitted electronically that allows visual text to be displayed on equipment such as a modem-equipped computer. This interim rule permits financial institutions to begin implementing systems that allow for the electronic delivery of EFTA disclosures during consideration of similar proposals under other financial services and fair lending laws, appearing elsewhere in today's **Federal Register**.

DATES: Interim rule effective March 25, 1998; comments must be received by May 15, 1998.

ADDRESSES: Comments should refer to Docket No. R–1002, and may be mailed to William W. Wiles, Secretary, Board of Governors of the Federal Reserve System, 20th Street and Constitution Avenue, N.W., Washington, DC 20551. Comments also may be delivered to Room B–2222 of the Eccles Building between 8:45 a.m. and 5:15 p.m. weekdays, or to the guard station in the Eccles Building courtyard on 20th Street, N.W. (between Constitution Avenue and C Street) at any time. Comments may be inspected in Room MP–500 of the Martin Building between 9:00 a.m. and 5:00 p.m. weekdays, except as provided in 12 CFR 261.12 of the Board's Rules Regarding Availability of Information.

FOR FURTHER INFORMATION CONTACT: Michael Hentrel or Obrea Poindexter, Staff Attorneys, or John Wood, Senior Attorney, Division of Consumer and Community Affairs, at (202) 452–2412 or (202) 452–3667. For the hearing impaired only, Telecommunications Device for the Deaf (TDD), contact Diane Jenkins at (202) 452–3544.

SUPPLEMENTARY INFORMATION:

I. Background

The Electronic Fund Transfer Act (EFTA), 15 U.S.C. 1693 *et seq.*, enacted in 1978, provides a basic framework establishing the rights, liabilities, and responsibilities of participants in electronic fund transfer (EFT) systems. The Board's Regulation E (12 CFR Part 205) implements the act. Types of transfers covered by the act and regulation include transfers initiated through an automated teller machine (ATM), point-of-sale terminal, automated clearinghouse, telephone bill-payment plan, or home banking program. The act and regulation contain rules that govern these and other EFTs. The rules prescribe restrictions on the unsolicited issuance of ATM cards and other access devices; disclosure of terms and conditions of an EFT service; documentation of EFTs by means of terminal receipts and periodic account statements; limitations on consumer liability for unauthorized transfers; procedures for error resolution; and certain rights related to preauthorized EFTs.

Depository institutions, service providers, and other entities use electronic communication to offer a wide variety of financial services relating to checking and other consumer asset accounts including: Account inquiries; transaction verifications; request and documentation of fund transfers between accounts; bill payment services; and full account management. Communicating electronically provides a fast, convenient, and less costly means of receiving and delivering information. In offering home banking and other financial services, depository institutions and others have asked whether they satisfy the requirements of the EFTA and Regulation E by providing or accepting information electronically. In connection with electronic commerce, some service providers would like to obtain the electronic equivalent of a written and signed authorization so that consumers' accounts can be debited on a recurring basis to pay for products or services.

In May 1996, the Board updated Regulation E and the staff commentary under the Board's Regulatory Planning and Review program, which requires regulations to be reviewed and updated periodically. (See 61 FR 19661, May 2, 1996.) During that process and in its review of regulations pursuant to section 303 of the Riegle Community Development and Regulatory Improvement Act of 1994 (12 U.S.C. 4803), the Board determined that the use of electronic communication to deliver information to consumers that is required by federal consumer financial services and fair lending laws could effectively reduce compliance costs without adversely affecting consumer protections. Simultaneous with the issuance of Regulation E update, the Board issued a proposed rule permitting financial institutions to satisfy the EFTA requirement that certain disclosures and other information be in writing by sending information electronically in a format the allows the display of text messages in a clear and readily understandable form. The proposal also required that disclosures be provided in a form the consumer may retain, a requirement that an institution could satisfy by providing information that may be printed or downloaded. The proposed rule allowed consumers to request a paper copy of a disclosure for up to one year after its original delivery (61 FR 19696, May 2, 1996).

The Board received approximately 110 comments on the proposal. The majority of comments were submitted by depository institutions and their trade associations. The commenters, including consumer representatives, generally supported the use of electronic communication to deliver information required by the EFTA and Regulation E. Many commenters suggested specific modifications and sought clarification on various aspects of the proposed rule; these comments are addressed below in the section-by-section discussion of the interim rule.

Based on a review of the comments and further analysis, the Board is publishing an interim rule that allows financial institutions to provide Regulation E disclosures electronically; such disclosures remain subject to applicable timing, format, and other requirements of the act and regulation. The interim rule will allow financial institutions to implement systems to provide EFTA information electronically while proposed rules are

being considered to allow the electronic delivery of disclosures under other laws. The term financial institution is broadly defined in the EFTA to include persons that directly or indirectly hold accounts belonging to consumers or that issue an access device and agree to provide EFT services. In this notice, the term ''financial institution'' is used in that context.

The interim rule is similar to the proposed rule. The interim rule, however, does not require financial institutions to provide paper copies of disclosures to a consumer upon request if the consumer has agreed to receive disclosures electronically. The Board believes that most financial institutions will accommodate consumer requests for paper copies when feasible.

Elsewhere in today's **Federal Register**, the Board is publishing proposed rules similar to the interim rule under Regulation E to address electronic communication under Regulation B (Equal Credit Opportunity), Regulation DD (Truth in Savings), Regulation M (Consumer Leasing), and Regulation Z (Truth in Lending). Previously, the Board published amendments to the staff commentary to Regulation CC (Availability of Funds and Collection of Checks) allowing depository institutions to send notices electronically (62 FR 13801, March 18, 1997).

II. Regulatory Revisions

The EFTA and Regulation E require a number of disclosures to be provided to consumers in writing. The requirement that disclosures be in writing has been presumed to require that institutions provide paper documents. However, under many laws that call for information to be in writing, information in electronic form is considered to be ''written.'' Information produced, stored, or communicated by computer is also generally considered to be a writing, where visual text is involved.

Pursuant to its authority under sections 904(a) and (c) of the EFTA, the Board is issuing an interim rule amending Regulation E to permit financial institutions to use electronic communication where the regulation requires that information be provided in writing. The term ''electronic communication'' is limited to a communication in a form that can be displayed as visual text. An example is an electronic visual text message that is displayed on a screen (such as a consumer's computer monitor). Communication by telephone voicemail systems does not meet the definition of ''electronic communication'' for purposes of this amendment because it does not have the feature generally associated with a writing—visual text.

Definition

Section 205.4(c)(1) defines electronic communication for purposes of Regulation E. The definition is generally the same as in the May 1996 proposed rule, except that editorial changes have been made in the interim rule to clarify and simplify the definition. The reference in the proposal to equipment ''in the consumer's possession'' has been deleted so as not to preclude application of the rule where, for example, a consumer uses a computer terminal in a public location such as a library or financial institution. The example of a screen phone has been deleted as unnecessary.

Agreements Between Financial Institutions and Consumers

Section 205.4(c)(2) permits financial institutions to send electronic disclosures if the consumer agrees. The interim rule simplifies the wording that was used in the proposed rule. Many commenters on the proposed rule requested that the Board clarify when an agreement between a financial institution and a consumer exists. More specifically, the commenters sought clarification that agreements may be established electronically. There may be various ways that a financial institution and a consumer could agree to the electronic delivery of disclosures and other information. Whether such an agreement exists between the parties is determined by applicable state law. The regulation does not preclude a financial institution and a consumer from entering into an agreement electronically, nor does it prescribe a formal mechanism for doing so. The Board does believe, however, that consumers should be clearly informed when they are consenting to the delivery of EFTA disclosures and other information electronically.

Requirement That Financial Institutions ''Send'' Electronic Disclosures to Consumers

The interim rule in § 205.4(c)(2), like the proposed rule, provides that disclosures may be ''sent'' to a consumer electronically. This is consistent with existing requirements in Regulation E, which generally specify that disclosures, documentation, and notices be ''mailed,'' ''delivered,'' or ''provided.'' Many commenters on the proposed rule suggested that making electronic disclosures ''available'' to consumers should satisfy the requirement. Commenters believed that consumers would benefit from the ability to obtain information from the financial institution, at any time, if the disclosures are ''available'' at a specified location. Commenters suggested that, alternatively consumers might have to wait for the institution to send information to a specific location, for example, an e-mail address provided by the consumer.

Generally, the regulation requires the financial institution to deliver the information—typically by mail—to an address designated by the consumer. For a paper communication, a financial institution generally would not satisfy that requirement by making disclosures ''available,'' for example, at the financial institution's office (or other location). (The staff commentary to Regulation E does allow financial institutions to permit, but not require, consumers to pick up their periodic statements at the institution. See comment 9(b)–4 to § 205.9.) The Board believes that consumers receiving disclosures by electronic communication should have protections regarding delivery similar to those afforded consumers receiving paper disclosures. Simply posting information on an Internet site without some appropriate notice and instructions about how the consumer may obtain the required information would not satisfy the requirement. Therefore, the interim rule, like the proposal, requires that disclosures be sent (delivered or transmitted) to consumers, but allows the option contained in comment 9(b)–4.

The requirement to send or deliver disclosures to a consumer is satisfied when the institution ensures that the disclosures will be displayed in a timely manner. For example, under Regulation E, initial disclosures must be provided at the time a consumer signs up for an EFT service or before the first transaction. Assume that a consumer uses a personal computer to sign up for a EFT service and consents to the electronic delivery of the initial disclosures. If the disclosures automatically appear on the computer screen before the consumer commits to the service (in accordance with the format and any other requirements of the act and regulation), the institution has satisfied the requirement to send (or deliver or transmit) disclosures to the consumer.

As a practical matter, there may be little distinction between sending or delivering electronic disclosures and making them ''available.'' Financial institutions have flexibility in how they may deliver electronic disclosures to consumers, including, but not limited to, the following examples. They may send disclosures to a consumer-

designated electronic mail address or they may designate a location on a website where the consumer might enter a personal identification number or other identifier to access required information. In the scenario described above, assume that the consumer signs up for an EFT service, receives the initial disclosures at that time, and agrees to receive all EFTA disclosures electronically. Subsequent disclosures sent to a designated address or placed at a designated location (for example, periodic statements or change-in-terms notices) would generally satisfy the delivery requirements of § 205.4(c)(2).

Electronic communication remains subject to any timing or other applicable requirements under Regulation E. For example, a financial institution that sends a change-in-terms notice required by § 205.8 of Regulation E must satisfy the requirement to provide the notice to the consumer at least 21 days in advance of the change. The Board solicits comment on whether further guidance is needed on how to comply with the timing requirements when a notice is posted on an Internet website.

Requirement That Information Be ''Clear and Readily Understandable''

Under the act and regulation, disclosures must be provided to consumers in a clear and readily understandable form. The proposed rule stated that disclosures provided by electronic communication are subject to this standard. Section 205.4(c)(2) of the interim rule retains this requirement, by cross referencing the current regulatory requirement.

Some commenters believed that the requirement would impose a compliance burden if financial institutions had to determine whether the consumer possesses the proper equipment to ensure that a disclosure provided electronically meets the standard. Some commenters expressed concern that the ''clear and readily understandable'' requirement, coupled with the screen phone example in the supplementary information to the proposed rule, implicitly disapproved of certain types of technologies. Further, some commenters objected to any consideration of the amount of text that may be viewed at any one time (or the screen size of a device) as a factor in determining whether the communication satisfies the requirement.

Under the interim rule, the ''clear and readily understandable'' requirement applies to electronic communication. The Board does not intend to discourage or encourage specific types of technologies. Regardless of the technology, however, the disclosures provided by electronic communication must meet the ''clear and readily understandable'' standard. While a financial institution is generally not required to ensure that the consumer has the equipment to read the disclosures, in some circumstances an institution would have the responsibility of making sure the proper equipment is in place. For example, if EFT services are offered through terminals in an institution's lobby, or through kiosks located in public or other places, the institution must ensure that the equipment meets the clear and readily understandable standard for EFTA disclosures that are being provided electronically.

Consumer Ability to Retain Disclosures

Under Regulation E, most disclosures must be provided in a form that the consumer may keep. Section 205.4(c)(2) of the interim rule, like the proposal, applies the same requirement to disclosures provided by electronic communication. Financial institutions satisfy the retention requirement if, for example, disclosures can be printed or downloaded by the consumer. Most commenters agreed with the Board's interpretation. Many commenters urged the Board to clarify that financial institutions are not obligated to monitor an individual consumer's ability to retain the information, or to ascertain whether the consumer has actually retained it.

The requirements or procedures for electronic delivery are similar to the paper delivery requirements, where the financial institution generally must mail or otherwise deliver the communication to the consumer but need not otherwise ensure that the consumer reads or retains it. Thus, financial institutions are generally not required to monitor a consumer's ability to retain the information, nor to take steps to find out whether the consumer has in fact retained it. The Board anticipates that, where appropriate, a financial institution will inform consumers of any special technical specifications for receiving or retaining information before or at the time a consumer agrees to receive information electronically.

Similar to the ''clear and readily understandable'' standard discussed above, in circumstances where the financial institution (or a network in which the institution is a member) controls the equipment to be used for an EFT service—such as ATMs or kiosks in public or other places—the institution does have the responsibility of ensuring retainability. Provided that the delivery requirements are satisfied—for example, that disclosures appear on a screen—methods for fulfilling this retention requirement could include, for example, printers incorporated into terminals or a screen message offering to transmit the disclosure that appears on the screen to the consumer's electronic mail or post office address.

Consumer's Ability to Request a Paper Copy of an Electronic Disclosure

The proposed rule would have required a financial institution to provide, upon request, a paper copy of any disclosure sent by electronic communication. The consumer could obtain a paper copy for up to one year after the disclosure was sent electronically. Many of the commenters did not object to the paper copy requirement, although most recommended that the Board establish a shorter time period for providing a copy. Some commenters believed that the requirement could diminish their ability to establish electronic accounts and eliminate the potential cost savings of electronic communication.

The interim rule does not require financial institutions to provide a paper copy upon request. In some instances, however, consumers who receive disclosures by electronic communication could experience computer or printer malfunctions. They may be using public electronic terminals that do not have a print or download capability, or they may otherwise need a paper copy of a disclosure on occasion. The Board expects that financial institutions will accommodate a consumer's request for a paper copy, or that they will redeliver disclosures electronically, to the extent that it is feasible to do so.

Paper Confirmation of Electronic Communications

Under the act and regulation, consumers must provide certain information to financial institutions, and institutions have the option of requiring that it be in writing. Regulation E provides that a consumer may stop payment of a preauthorized EFT or allege an error by notifying the institution orally or in writing, and that the institution may require written confirmation of an oral stop-payment order or notice of error.

In the supplementary information to the May 1996 proposed rule, the Board stated its belief that (as in the case of an oral communication) if the consumer sends an electronic communication to the financial institution, the institution could require paper confirmation from the consumer (particularly since the consumer was entitled to a paper copy

upon request under the proposed rule). The Board requested comment on whether and how the regulation should address this point.

Some financial institutions commented that in accepting electronic communication from a consumer, they may need to require paper confirmations for their own and the consumer's protection. Many commenters stated that there will be situations in which it is important for financial institutions to have the ability to require paper confirmations (for example, because it may be more secure). These commenters requested that the Board allow financial institutions to request paper confirmations for certain communications.

Under the interim rule, financial institutions may request paper confirmations in cases where they can currently require written confirmation—electronic and oral stop-payment notices, and electronic and oral notices of error. The financial institution, however, must clearly identify to the consumer the information subject to paper confirmation and must provide the address where written confirmation must be sent.

Consumers preserve their rights under the act and regulation when they send notices of error electronically. If the consumer notifies the financial institution of an alleged error, the financial institution must begin its investigation promptly upon receiving the electronic notice. The financial institution may not delay its investigation until it has received a paper confirmation. This requirement is the same as the requirement for written confirmation following an oral error notice (see comment 11(c)–2 of the staff commentary).

Consumer Signatures and Similar Authentication

Section 205.10(b) requires that preauthorized EFTs be authorized only by a writing signed or similarly authenticated by the consumer. The phrase ''or similarly authenticated'' was added in the 1996 review of Regulation E. The Board indicated in the **Federal Register** notice accompanying the amendment that the authentication method should provide the same assurance as a signature in a paper-based system, and cited security codes and digital signatures as examples of authentication devices that might meet the requirements of § 205.10(b). Since the 1996 amendment, the Board has received requests for further guidance on electronic authentication methods. The Board is interested in learning about other ways in which authentication in an electronic environment might take the place of the consumer's signature.

Current Need for Safeguards Concerning the Electronic Delivery of Disclosures

Today, most consumers receive federal disclosures in paper form. As electronic commerce and electronic banking increase and technological advances take place, obtaining disclosures by electronic communication will likely become more commonplace. Currently, however, the use of electronic communication in the delivery of financial services is still evolving. Thus, it is difficult to fully predict the extent to which additional safeguards, if any, may be needed to ensure that consumers receive the same protections that exist for disclosures in paper form. The Board expects that depository institutions and other institutions subject to the EFTA and Regulation E will provide sufficient details about the delivery of disclosures. The Board plans to closely monitor the development of electronic delivery of EFTA disclosures and other information, and will address compliance or other issues that may arise as appropriate.

III. Form of Comment Letters

Comment letters should refer to Docket No. R–1002 and, when possible, should use a standard typeface with a type size of 10 or 12 characters per inch. This will enable the Board to convert the text to machine-readable form through electronic scanning, and will facilitate automated retrieval of comments for review. Also, if accompanied by an original document in paper form, comments may be submitted on 3½ inch or 5¼ inch computer diskettes in any IBM-compatible DOS-based format.

IV. Regulatory Flexibility Analysis

In accordance with section 3(a) of the Regulatory Flexibility Act and section 904(a)(2) of the EFTA, the Board's Office of the Secretary has reviewed the interim amendments to Regulation E. Overall, the interim amendments are not expected to have any significant impact on small entities. The interim rule would relieve compliance burden by giving financial institutions flexibility in providing disclosures. A final regulatory flexibility analysis will be conducted after consideration of comments received during the public comment period.

V. Paperwork Reduction Act

In accordance with section 3506 of the Paperwork Reduction Act of 1995 (44 U.S.C. Ch. 35; 5 CFR part 1320 Appendix A.1), the Board reviewed the interim rule under the authority delegated to the Board by the Office of Management and Budget.

The collection of information requirements in this interim regulation are found in 12 CFR Part 205. This information would be mandatory to ensure adequate disclosure of basic terms, costs, and rights relating to services affecting consumers using certain home-banking services and consumers receiving certain disclosures by electronic communication. The respondents/recordkeepers are for-profit financial institutions, including small businesses. This regulation applies to all types of depository institutions, not just state member banks. However, under Paperwork Reduction Act regulations, the Federal Reserve accounts for the burden of the paperwork associated with the regulation only for state member banks. Other agencies account for the paperwork burden on their respective constituencies under this regulation.

The Federal Reserve has no data on which to estimate the burden the regulatory amendments would impose on state member banks. However, since the amendments provide an alternative method for delivering disclosures and notices, it is anticipated that the requirements would not be burdensome. The use of electronic communication would likely reduce the paperwork burden of financial institutions. Institutions would be able to use electronic communication to provide disclosures and other information rather than having to print and mail the information in paper form.

The Federal Reserve requests comments from institutions, especially state member banks, that will help to estimate the number and burden of the various disclosures that would be made in the first year this interim regulation is effective. Comments are invited on: (a) The cost of compliance; (b) ways to enhance the quality, utility, and clarity of the information to be disclosed; and (c) ways to minimize the burden of disclosure on respondents, including through the use of automated disclosure techniques or other forms of information technology. Comments on the collection of information should be sent to the Office of Management and Budget, Paperwork Reduction Project (7100–0200), Washington, DC 20503, with copies of such comments sent to Mary M. McLaughlin, Federal Reserve Board

Clearance Officer, Division of Research and Statistics, Mail Stop 97, Board of Governors of the Federal Reserve System, Washington, DC 20551.

List of Subjects in 12 CFR Part 205

Banks, Banking, Consumer protection, Electronic fund transfers, Reporting and record keeping requirements.

Pursuant to the authority granted in sections 904(a) and (c) of the Electronic Fund Transfer Act, 15 U.S.C. 1693b(a) and (c), and for the reasons set forth in the preamble, the Board amends Regulation E, 12 CFR part 205, as set forth below:

PART 205—ELECTRONIC FUND TRANSFERS (REGULATION E)

1. The authority citation for part 205 continues to read as follows:

Authority: 15 U.S.C. 1693–1693r.

2. Section 205.4 is amended by adding paragraph (c) to read as follows:

§ 205.4 General disclosure requirements; jointly offered services.

* * * * *

(c) *Electronic communication.*—(1) *Definition.* For purposes of this regulation, the term *electronic communication* means a message transmitted electronically between a consumer and a financial institution in a format that allows visual text to be displayed on equipment such as a personal computer monitor.

(2) *Electronic communication between financial institution and consumer.* A financial institution and a consumer may agree to send by electronic communication any information required by this regulation to be in writing. Information sent by electronic communication to a consumer must comply with paragraph (a) of this section and the applicable timing and other requirements contained in the regulation.

* * * * *

By order of the Board of Governors of the Federal Reserve System, March 12, 1998.

William W. Wiles,

Secretary of the Board.

[FR Doc. 98–6988 Filed 3–24–98; 8:45 am]

BILLING CODE 6210–01–P

FEDERAL RESERVE SYSTEM

12 CFR Part 230

[Regulation DD; Docket No. R–1003]

Truth in Savings

AGENCY: Board of Governors of the Federal Reserve System.

ACTION: Proposed rule.

SUMMARY: The Board is publishing for comment a proposed rule amending Regulation DD which implements the Truth in Savings Act. The proposed rule would allow depository institutions to deliver by electronic communication disclosures required by the act and regulation, if the consumer agrees to such delivery. In addition, the Board is publishing proposed amendments to implement amendments to the Truth in Savings Act enacted as part of the Economic Growth and Regulatory Paperwork Reduction Act of 1996. The law modifies the rules for indoor lobby signs, eliminates subsequent disclosure requirements for automatically renewable time accounts with terms less than one month, and repeals the civil liability provisions as of September 30, 2001.

DATES: Comments must be received by May 15, 1998.

ADDRESSES: Comments should refer to Docket No. R–1003, and may be mailed to William W. Wiles, Secretary, Board of Governors of the Federal Reserve System, 20th Street and Constitution Avenue, N.W., Washington, DC 20551. Comments also may be delivered to Room B–2222 of the Eccles Building between 8:45 a.m. and 5:15 p.m. weekdays, or to the guard station in the Eccles Building courtyard on 20th Street, N.W. (between Constitution Avenue and C Street) at any time. Comments may be inspected in Room MP–500 of the Martin Building between 9:00 a.m. and 5:00 p.m. weekdays, except as provided in 12 CFR 261.12 of the Board's Rules Regarding Availability of Information.

FOR FURTHER INFORMATION CONTACT: Michael Hentrel or Obrea Poindexter, Staff Attorneys, Division of Consumer and Community Affairs, at (202) 452–3667 or 452–2412. For the hearing impaired only, Telecommunications Device for the Deaf (TDD), contact Diane Jenkins, at (202) 452–3544.

SUPPLEMENTARY INFORMATION:

I. Background

The Truth in Savings Act (TISA) is implemented by the Board's Regulation DD, issued September 21, 1992 (57 FR 43337) (correction notice at 57 FR 46480, October 9, 1992). Compliance with the regulation became mandatory in June 1993. The act and regulation require depository institutions to disclose yields, fees, and other terms concerning deposit accounts to consumers at account opening. The regulation also includes rules about advertising of deposit accounts. Credit unions are governed by a substantially similar regulation issued by the National Credit Union Administration.

As part of the Regulatory Planning and Review Program and its review of regulations under section 303 of the Riegle Community Development and Regulatory Improvement Act of 1994 (12 U.S.C. 4803), the Board determined that the use of electronic communication for delivery of information to consumers that is required by federal consumer financial services and fair lending laws could effectively reduce regulatory compliance burden without adversely affecting consumer protections. Thus, the Board has been considering the issue and closely following the development of electronic communication. For example in May 1996, the Board proposed to amend Regulation E (Electronic Fund Transfers) to permit disclosures to be provided electronically. In March 1997, the Board issued an amendment to the staff commentary to Regulation CC (Availability of Funds and Collection of Checks) that allowed financial institutions to send notices electronically. (62 FR 13801, March 18, 1997.)

Having considered the comments received on the Regulation E proposal and other rulemakings, the Board now proposes to amend Regulation DD to allow institutions to provide Regulation DD disclosures electronically; such disclosures would remain subject to any applicable timing, format, and other requirements of the act and the regulation. Concurrently, the Board is issuing similar proposed revisions to address electronic communication under Regulations B (Equal Credit Opportunity), M (Consumer Leasing), and Z (Truth in Lending), published elsewhere in today's **Federal Register**. In addition, the Board has issued an interim rule under Regulation E also published elsewhere in today's **Federal Register**, so that financial institutions can implement systems to provide Electronic Fund Transfer Act information electronically.

II. Proposed Regulatory Revisions

Electronic Communication

The TISA and Regulation DD require several disclosures to be provided to consumers in writing. Under Regulation DD, the regulatory requirement that disclosures be in writing has been presumed to require institutions to provide paper documents. However, under many laws that call for information to be in writing, information in electronic form is considered to be ''written.'' Information produced, stored, or communicated by computer is also generally considered to be a writing at least where visual text is involved.

Therefore, pursuant to its authority under Section 269 of the TISA, the Board proposes to amend Regulation DD to permit depository institutions to use electronic communication where the regulation calls for information to be provided in writing. The term ''electronic communication'' is limited to a communication that can be displayed as visual text. An example is an electronic visual text message that is displayed on a screen (such as the consumer's computer monitor). Communications by telephone voicemail systems do not meet the definition of ''electronic communication'' for purposes of this regulation because they do not have the feature generally associated with a writing—visual text.

Statutory Amendments

The Economic Growth and Regulatory Paperwork Reduction Act of 1996 (1996 Act) contains amendments to the TISA. An amendment to section 266(a)(3) eliminates the requirement that institutions provide disclosures in advance of maturity for automatically renewable (rollover) time accounts with a term of 30 days or less. The Board believes the Congressional intent was to eliminate any subsequent disclosures for monthly time accounts. Accordingly, the proposed amendments to Regulation DD delete § 230.5(c), which requires that institutions disclose (after the account is opened) any changes in account terms for rollover time accounts with a maturity of one month or less. Institutions will continue to provide disclosures when these accounts are opened.

An amendment to section 263(c) of the act expands an exemption from certain advertising provisions for signs on the premises of a depository institution. The proposed amendments to Regulation DD apply this exemption to all signs on the premises of an institution. Section 230.8(e) would be revised to exempt those signs that are inside the premises of the depository institution, including those that face out. Any sign posted outside the depository institution would remain

covered by the advertising provisions unless the sign is exempt by some other provision (such as the electronic media exemption). The 1996 Act repeals the TISA's civil liability provisions, effective September 30, 2001. This statutory amendment does not require a regulatory revision, as the regulation generally does not address civil liability.

III. Section-by-Section Analysis

Section 230.3 General Disclosure Requirements

Section 230.3(a) would be revised to address electronic communication. ''Electronic communication'' is a visual text message electronically transmitted between a depository institution and a consumer's home computer or other electronic device used by a consumer.

Agreements Between Institutions and Consumers

Section 230.3(a)(2) would permit depository institutions to send electronic disclosures if the consumer agrees. There may be various ways that a financial institution and a consumer could agree to the electronic delivery of disclosures and other information. Whether such an agreement exists between the parties would be determined by applicable state law. The regulation would not preclude a depository institution and a consumer from entering into an agreement electronically, nor does it prescribe a formal mechanism for doing so. The Board does believe, however, that consumers should be clearly informed when they are consenting to the delivery of TISA disclosures and other information electronically.

Delivery Requirements for Electronic Communication

Regulation DD provides that an institution must, for example, ''provide'' or ''deliver'' information to a consumer. Generally, the delivery requirement anticipates that a depository institution will deliver the information—typically by mail—to an address designated by the consumer. For a paper communication, a depository institution would not satisfy that requirement by making disclosures ''available'' to consumers, for example, at a financial institution's office (or other location). The Board believes that consumers receiving disclosures by electronic communication should have protections regarding delivery similar to those afforded consumers receiving disclosures in paper form. Simply posting information on an Internet site without some appropriate notice and instructions about how the consumer may obtain the required information would not satisfy the requirement.

The requirement to send or deliver disclosures to a consumer would be satisfied if the institution ensures that the disclosures will be displayed in a timely manner. For example, under Regulation DD, account disclosures must be provided before the consumer opens an account or a service is provided, whichever is earlier. Assume that a consumer uses a personal computer to open an account and consents to the electronic delivery of account disclosures. If the disclosures automatically appear on the computer screen before the account is opened or the service is provided (in accordance with the format, timing, and any other requirements of the act and regulation), the institution would satisfy the requirement to send (or deliver or transmit) disclosures to the consumer.

As a practical matter, there may be little distinction between sending or delivering electronic disclosures and making them ''available.'' Depository institutions have flexibility in how they deliver electronic disclosures to consumers including, but not limited to, the following examples. They may send disclosures to a consumer-designated electronic mail address, or they may designate a location on a website where the consumer might enter a personal identification number or other identifier to access required information. If a consumer opens an account, receives the account disclosures at that time, and agrees to receive all Regulation DD disclosures electronically, subsequent disclosures, such as periodic statements or change-in-terms notices, sent (or delivered) to the designated address or placed at a designated location would generally satisfy the delivery requirements of the regulation.

Electronic communication would remain subject to any timing or other applicable requirements under Regulation DD. For example, a depository institution that sends a change-in-terms notice required by § 230.5(a) of Regulation DD must satisfy the requirement to provide the notice to a consumer at least 30 days in advance of the change. The Board solicits comment on whether further guidance is needed on how to comply wth the timing requirements when a notice is posted on an Internet website.

Timing of Providing Account Opening Disclosures

Account opening disclosures, required under § 230.4(a), set forth the terms and conditions of the account. These disclosures inform the consumers of the types and amount of any fees that may be imposed and the interest rate and annual percentage yield (APY) that will be paid on the account. Section 230.4(a)(1) requires that account disclosures be provided before an account is opened or a service is provided, whichever is earlier.

Section 266(b) of the TISA provides that if the consumer is not present at the institution when an initial account is accepted (and the disclosures have not been furnished previously) the institution shall mail or deliver the disclosures no later than ten days after the account is opened or the service is provided. The rationale underlying the ten-day exception is that, in some instances (such as when an account is opened by telephone), the institution cannot provide written disclosures before an account is opened. Because this proposal would permit disclosures to be provided electronically, the same difficulty does not exist if an account is opened electronically. Thus, the Board believes that this ten-day exception should not apply. One major purpose of the TISA is to require clear and uniform disclosure so that consumers can make meaningful comparisons of deposit accounts offered by financial institutions before opening an account. The Board believes that permitting a ten-day delay would seriously diminish the consumer's ability to compare account terms and, therefore, hinder an explicit purpose of the TISA. Thus, the proposed rule requires that account opening disclosures be given before the account is opened or a service is provided, when an account is opened using electronic communication.

Requirement That Information be ''Clear and Conspicuous''

Section 230.3(a) of Regulation DD requires depository institutions to present required information ''clearly and conspicuously.'' Under the proposed rule, the ''clear and conspicuous'' requirement applies to electronic communication. The Board does not intend to discourage or encourage specific types of technologies. Regardless of technology, however, the disclosures provided by electronic communication must meet the ''clear and conspicuous'' standard. While a depository institution is generally not required to ensure that the consumer has the equipment to read the disclosures, in some circumstances institutions would have the responsibility of making sure the proper equipment is in place. For example, if financial services are offered through terminals in an institution's premises, or through kiosks located in public or other places (such as grocery stores), the

institution must ensure that the equipment meets the clear and conspicuous standard for TISA disclosures that are being provided electronically.

Consumer Ability to Retain Disclosures

Section 230.3(a) of Regulation DD requires that written disclosures be in a form the consumer may keep. This requirement would apply to disclosures provided by electronic communication. Depository institutions would satisfy the retention requirement if, for example, disclosures can be printed or downloaded by the consumer. The requirements for electronic delivery are similar to the current paper requirements, where depository institutions generally must mail or deliver the information to the consumer but need not ensure that the consumer reads or retains it. Thus, depository institutions would not be required to monitor an individual consumer's ability to retain the information, nor to take steps to find out whether the consumer has in fact retained it. The Board anticipates that a depository institution would inform the consumer of any special technical specifications for receiving or retaining information before or at the time a consumer agrees to receive information electronically.

As in the case of the ''clear and conspicuous'' standard discussed above, in circumstances where the financial institution (or a network in which the institution is a member) controls the equipment to be used for a service—such as terminals in institution lobbies or kiosks in shopping centers—the institution would have the responsibility of ensuring retainability. Methods for fulfilling this requirement could include, for example, printers incorporated into terminals or a screen message offering to transmit the disclosure to the consumer's electronic mail or post office or other address provided that the delivery requirements (discussed above) are satisfied.

Current Need for Safeguards Concerning the Electronic Delivery of Disclosures

Today, most consumers receive federal disclosures in paper form. As electronic commerce and electronic banking increase and technological advances take place, obtaining disclosures by electronic communication will likely become more commonplace. Currently, however, the use of electronic communication in the delivery of financial services is still evolving. In light of this evolution, it is difficult to fully predict the extent to which additional safeguards, if any, may be needed to ensure that consumers receive the same protections that exist for disclosures in paper form. The Board expects that depository institutions and other institutions subject to Regulation DD will provide sufficient details about the delivery of disclosures. The Board plans to closely monitor the development of electronic delivery of TISA disclosures and other information, and will address compliance or other issues that may arise as appropriate.

Section 230.5 Subsequent Disclosures

5(c) Notice for Time Accounts One Month or Less That Renew Automatically

Section 266(a)(3) of the TISA requires institutions to provide certain disclosures for rollover time accounts at least 30 days before maturity. In implementing this provision in 1992, the Board looked to the legislative history of the TISA, which suggested special rules for short-term time accounts. The Board determined that the purposes of the legislation would not be served by requiring advance disclosures for rollover time accounts with maturities of one month or less. Regulation DD therefore did not require disclosures to be provided in advance of maturity for such time accounts. However, under § 230.5(c) of the regulation, if a term disclosed when the account was opened is changed at renewal, institutions were required to send a notice describing the change within a reasonable time after the renewal of the account.

The 1996 Act eliminates the requirement that institutions provide disclosures in advance of maturity for automatically renewable time accounts with a term of 30 days or less. (Institutions will continue to provide disclosures when these accounts are opened.) Accordingly, the Board proposes to delete § 230.5(c) and the corresponding provision in the official staff commentary, comment 5(c)-1.

The statute eliminates these disclosures for rollover time accounts with a maturity of 30 days or less. Technically, the statute could be read to require subsequent disclosures for rollover time accounts with a maturity of 31 days. For ease of compliance, the Board proposes to eliminate subsequent disclosures for rollover time accounts with a maturity of ''one month or less.'' This approach would not require subsequent disclosures for accounts with a maturity of 31 days and is consistent with other provisions of Regulation DD that interpret one month to include 31 days.

Section 230.8 Advertising

8(e) Exemption for Certain Advertisements

8(e)(2) Indoor Signs

Section 263(a) of the TISA provides that a reference to a specific interest rate, yield, or rate of earnings in an advertisement triggers a duty to state certain additional information, including the annual percentage yield. In 1994, the Congress amended section 263(c) of the advertising rules to provide that if a rate is displayed on a sign (including a rate board) designed to be viewed only from the interior of an institution, the disclosure requirements of section 263 do not apply.

A further amendment to section 263(c) of the TISA contained in the 1996 Act expands the exemption for signs on the premises of the depository institution. Under the Board's proposal, all signs inside the premises of an institution would be exempt from certain advertising disclosures (including signs that face outdoors and that are intended to be viewed from outside the premises). The proposal would delete the reference in § 230.8(e) to signs that face outside and the corresponding provision in the official staff commentary, comment 8(e)(2)(i)2. Any sign posted outside a depository institution remains covered by the advertising provisions unless the sign qualifies for some other exemption, such as the exemption for broadcast or electronic media.

Section 230.8(e) of Regulation DD exempts advertisements made through broadcast or electronic media from several of the mandatory advertising disclosures. Questions have arisen about whether the limited exception for broadcast media applies to computer or other advertisements, such as those posted on the Internet. The Board believes that such advertisements are not exempt under the broadcast or electronic media provision. The rationale for broadcast and electronic media exemptions is that these media have time or space constraints that make it extremely burdensome to provide the required disclosures. Advertisements posted on the Internet generally do not have the same time and space constraints. Such advertisements would remain subject to the general advertising rules and, therefore, must comply with the requirements of §§ 230.8(a), (b), (c), and (d) of this section.

Appendix B to Part 230—Model Clauses and Sample Forms

The Board is not proposing any amendments to the model forms and

clauses in Appendix B. The Board believes that financial institutions can adapt the current forms and clauses in Appendix B for electronic use.

IV. Form of Comment Letters

Comment letters should refer to Docket No. R–1003 and, when possible, should use a standard typeface with a type size of 10 or 12 characters per inch. This will enable the Board to convert the text to machine-readable form through electronic scanning, and will facilitate automated retrieval of comments for review. Also, if accompanied by an original document in paper form, comments may be submitted on 3 ½ inch or 5 ¼ inch computer diskettes in any IBM-compatible DOS-based format.

V. Regulatory Flexibility Analysis

In accordance with section 3(a) of the Regulatory Flexibility Act, the Board's office of the Secretary has reviewed the proposed amendments to Regulation DD. Overall, the proposed amendments are not expected to have any significant impact on small entities. The proposed rule would relieve compliance burden. The proposed rule would also give depository institutions flexibility in providing disclosures. A final regulatory flexibility analysis will be conducted after consideration of comments received during the public comment period.

VI. Paperwork Reduction Act

In accordance with the Paperwork Reduction Act of 1995 (44 U.S.C. 3506; 5 CFR 1320 Appendix A.1), the Board reviewed the proposed rule under the authority delegated to the Board by the Office of Management and Budget.

The Federal Reserve has no data with which to estimate the change in the burden that would be the result of the proposed acceptability of electronic communications. Depository institutions would be able to use electronic communication to provide disclosures and other information required by this regulation rather than having to print and mail the information in paper form. The use of electronic communication in home banking and financial services may reduce the paperwork burden on creditors and financial institutions or merely may reduce the dollar cost.

The Federal Reserve requests comments from depository institutions, especially state member banks, that will help to estimate the number and burden of the various disclosures that would be made in the first year this rule is effective. Comments are invited on: (a) whether the proposed revised collection of information is necessary for the proper performance of the Federal Reserve's functions; including whether the information has practical utility; (b) the accuracy of the Federal Reserve's estimate of the burden of the proposed revised information collection, including the cost of compliance; (c) ways to enhance the quality, utility, and clarity of the information to be collected; and (d) ways to minimize the burden of information collection on respondents, including through the use of automated collection techniques or other forms of information technology. Comments on the collections of information should be sent to the Office of Management and Budget, Paperwork Reduction Project (7100–0271), Washington, DC 20503, with copies of such comments to be sent to Mary M. McLaughlin, Chief, Financial Reports Section, Division of Research and Statistics, Mail Stop 97, Board of Governors of the Federal Reserve System, Washington, DC 20551.

The collection of information requirements in this proposed regulation are found throughout 12 CFR part 230 and in Appendices A and B. This information is mandatory (12 U.S.C. 4308) to assist consumers in comparing deposit accounts offered by depository institutions, principally through the disclosure of fees, annual percentage yield, interest rate, and other account terms whenever a consumer requests the information and before an account is opened. The regulation also requires that fees and other information be provided on any periodic statement the institution sends to the consumer. The respondents/recordkeepers are for-profit financial institutions, including small businesses. Records, required to evidence compliance with the regulation, must be retained for twenty-four months.

The Board also proposes to extend the Recordkeeping and Disclosure Requirements in Connection with Regulation DD (OMB No. 7100–0271) for three years. The current estimated total annual burden for this information collection is 1,478,395 hours, as shown in the top half of the table below. These amounts reflect the burden estimate of the Federal Reserve System for the 996 state member banks under its supervision. This regulation applies to all types of depository institutions (except credit unions), not just to state member banks. However, under Paperwork Reduction Act regulations, the Federal Reserve only accounts for the burden of the paperwork associated with state member banks. Other agencies account for the paperwork burden for the institutions they supervise.

Both the proposed rules for indoor lobby signs and elimination of subsequent disclosure requirements for automatically renewable time accounts with terms less than one month would decrease the frequency of response slightly; these reductions are shown in the bottom half of the table. It is estimated that the total amount of annual burden after these two proposed revisions would be 1,476,071 hours. There is estimated to be no associated capital or start up cost. The Federal Reserve has not estimated there to be any annual cost burden over the annual hour burden.

	Number of respondents	Estimated annual frequency	Estimated response time	Eestimated annual burden hours
Current				
Complete account disclosures (Upon request and new accounts)	996	300	5 minutes	24,900
Subsequent notices:				
Change in terms	996	1,130	1 minute	18,757
Prematurity notices	996	1,095	1 minute	18,177
Periodic statements	996	84,615	1 minute	1,404,609
Advertising	996	12	1 hour	11,952
Total				1,478,395
Proposed				
Complete account disclosures (Upon request and new accounts)	996	300	5 minutes	24,900
Subsequent notices:				
Change in terms	996	1,130	1 minute	18,757

	Number of respondents	Estimated annual frequency	Estimated response time	Eestimated annual burden hours
Prematurity notices	996	1,015	1 minute	16,849
Periodic statements	996	84,615	1 minute	1,404,609
Advertising	996	11	1 hour	10,956
Total				1,476,071
Change				−2,324

The initial disclosures concerning consumers' rights and responsibilities for error resolution are available to the public. Transaction- or account-specific disclosures are not publicly available and are confidential between the depository institution and the consumer. Since the Federal Reserve does not collect any information, no issue of confidentiality normally arises. However, the information may be protected from disclosure under the exemptions (b)(4), (6), and (8) of the Freedom of Information Act (5 U.S.C. 552(b)). The Federal Reserve may not conduct or sponsor, and an organization is not required to respond to, this information collection unless it displays a currently valid OMB control number. The OMB control number is 7100–0271.

List of Subjects in 12 CFR Part 230

Advertising, Banks, Banking, Consumer protection, Federal Reserve System, Reporting and recordkeeping requirements, Truth in savings.

Text of Proposed Revisions

Certain conventions have been used to highlight the proposed changes to Regulation DD. New language is shown inside bold-faced arrows, while language that would be removed is set off with brackets.

For the reasons set forth in the preamble, the Board proposes to amend, 12 CFR part 230, as set forth below:

PART 230—TRUTH IN SAVINGS (REGULATION DD)

1. The authority citation for part 230 continues to read as follows:

Authority: 12 U.S.C. 4301 *et seq.*

2. In § 230.3, the following amendments would be made:

a. By designating the text of paragraph (a) as paragraph (a)(1) and adding a heading to newly designated paragraph (a)(1);

b. A new paragraph (a)(2) would be added.

The addition and revisions would read as follows:

§ 230.3 General disclosure requirements.

(a) *Form.*—►(1) *General requirements.*◄ * * *

►(2) *Electronic communication*◄. The term *electronic communication* means a message transmitted electronically between a consumer and a depository institution in a format that allows visual text to be displayed on equipment such as a personal computer monitor. A depository institution and a consumer may agree to send by electronic communication any information required by §§ 230.4 through 230.6 of this part. Information sent by electronic communication to a consumer must comply with paragraph (a)(1) of this section and any applicable timing requirements contained in this part.◄

* * * * *

3. Section 230.5 would be amended by removing paragraph (c) and redesignating paragraph (d) as new paragraph (c):

§ 230.5 Subsequent disclosures.

* * * * *

[(c) *Notice for time accounts one month or less that renew automatically.* For time accounts with a maturity one month or less that renew automatically at maturity, institutions shall disclose any difference in the terms of the new account as compared to the terms required to be disclosed under § 230.4(b) of this part for the existing account, other than a change in the interest rate and corresponding change in the annual percentage yield. The notice shall be mailed or delivered within a reasonable time after the renewal.**]**

4. Section 230.8 would be amended by revising paragraph (e)(2)(i) to read as follows:

§ 230.8 Advertising.

* * * * *

(e) *Exemption for certain advertisements.* * * *

(2) *Indoor signs.* (i) Signs inside the premises of a depository institution (or the premises of a deposit broker) are not subject to paragraphs (b), (c), (d) or (e)(1) of this section **[**unless they face outside the premises and can reasonably be viewed by a consumer only from outside the premises**]**.

* * * * *

5. In Supplement I to Part 230, in § 230.5—Subsequent disclosures, under paragraph (c), paragraph 1. would be removed:

Supplement I to Part 230—Official Staff Interpretations

* * * * *

§ 230.5 Subsequent disclosures

* * * * *

(c) Notice for time accounts one month or less that renew automatically

[1. *Providing disclosures within a reasonable time.* Generally, 10 calendar days after an account renews is a reasonable time for providing disclosures. For time accounts shorter than 10 days, disclosures should be given prior to the next renewal date. For example, if a time account automatically renews every 7 days, disclosures about an account that renews on Wednesday, December 7, 1994, should be given prior to Wednesday, December 14.**]**

* * * * *

6. In Supplement I to Part 230, in § 230.8—Advertising, under paragraph (e)(2)(i), paragraph 2. would be removed.

* * * * *

§ 230.8 Advertising

* * * * *

(e)(2) Indoor signs.

(e)(2)(i)

* * * * *

[2. *Consumers outside the premises.* Advertisements may be ''indoor signs'' even though they may be viewed by consumers from outside. An example is a banner, in an institution's glass-enclosed branch office, that is located behind a teller facing customers but is readable by passersby.**]**

* * * * *

By order of the Board of Governors of the Federal Reserve System, March 12, 1998.

William W. Wiles,

Secretary of the Board.

[FR Doc. 98–6989 Filed 3–24–98; 8:45 am]

BILLING CODE 6210–01–P

FEDERAL RESERVE SYSTEM

12 CFR Part 213

[Regulation M; Docket No. R–1004]

Consumer Leasing

AGENCY: Board of Governors of the Federal Reserve System.

ACTION: Proposed rule.

SUMMARY: The Board is publishing for comment a proposed rule amending Regulation M, which implements the Consumer Leasing Act. The act requires lessors to provide consumers with uniform cost and other disclosures about consumer lease transactions. The proposed rule would allow lessors to deliver by electronic communication the disclosures required by the act and regulation, if the consumer agrees to such delivery. For purposes of the regulation, an electronic communication is a message transmitted electronically that allows visual text to be displayed on equipment such as a modem-equipped computer. In addition, the proposal contains several technical amendments that would be made to the regulation and commentary.

DATES: Comments should be received by May 15, 1998.

ADDRESSES: Comments should refer to Docket No. R–1004, and may be mailed to William W. Wiles, Secretary, Board of Governors of the Federal Reserve System, 20th Street and Constitution Avenue, N.W., Washington, DC 20551. Comments also may be delivered to Room B–2222 of the Eccles Building between 8:45 a.m. and 5:15 p.m. weekdays, or to the guard station in the Eccles Building courtyard on 20th Street, N.W. (between Constitution Avenue and C Street) at any time. Comments may be inspected in Room MP–500 of the Martin Building between 9:00 a.m. and 5:00 p.m. weekdays, except as provided in 12 CFR 261.12 of the Board's Rules Regarding Availability of Information.

FOR FURTHER INFORMATION CONTACT: Obrea Poindexter or Kyung Cho-Miller, Staff Attorneys, Division of Consumer and Community Affairs, Board of Governors of the Federal Reserve System, at (202) 452–3667. For users of Telecommunications Device for the Deaf (TDD) only, Diane Jenkins at (202) 452–3544.

SUPPLEMENTARY INFORMATION:

I. Background

The Consumer Leasing Act (CLA), 15 U.S.C. 1667–1667e, was enacted into law in 1976 as an amendment to the Truth in Lending Act (TILA), 15 U.S.C. 1601 *et seq.* The Board's Regulation M (12 CFR 213) implements the act. The CLA requires lessors to provide consumers with uniform cost and other disclosures about consumer lease transactions. The act generally applies to consumer leases of personal property in which the contractual obligation does not exceed $25,000 and has a term of more than four months. An automobile lease is the most common type of consumer lease covered by the act.

As part of the Regulatory Planning and Review Program and its review of regulations under section 303 of the Riegle Community Development and Regulatory Improvement Act of 1994 (12 U.S.C. 4803), the Board determined that the use of electronic communication to deliver information to consumers that is required by federal consumer financial services and fair lending laws could effectively reduce regulatory compliance burden without adversely affecting consumer protections. Thus, the Board has been considering the issue and closely following the development of electronic communication. For example, in May 1996 the Board proposed to amend Regulation E (Electronic Fund Transfers) to permit disclosures to be provided electronically. In March 1997, the Board issued an amendment to the staff commentary to Regulation CC (Availability of Funds and Collection of Checks) that allowed financial institutions to send notices electronically. (62 FR 13801, March 18, 1997.)

Having considered the comments received on the Regulation E proposal and other rulemakings, the Board now proposes to amend Regulation M to allow lessors to provide Regulation M disclosures electronically. Any electronic communication would remain subject to the timing, format, and other requirements of the act and the regulation. Concurrently, the Board is issuing similar proposed rules to address electronic communication under Regulations DD (Truth in Savings), B (Equal Credit Opportunity), and Z (Truth in Lending), published elsewhere in today's **Federal Register**. In addition, the Board has issued an interim rule under Regulation E also published elsewhere in today's **Federal Register** so that financial institutions can implement systems to provide Electronic Fund Transfer Act disclosures electronically.

II. Proposed Regulatory Revisions

The CLA and Regulation M require disclosures to be provided to consumers in writing. Under Regulation M, the requirement that disclosures be in writing has been presumed to require that lessors provide paper documents. However, under many laws that call for information to be in writing, information in electronic form is considered to be ''written.'' Information produced, stored, or communicated by computer is also generally considered to be a writing at least where text is involved.

Pursuant to its authority under section 187 of the CLA, the Board proposes to amend Regulation M to permit lessors to use electronic communication where the regulation calls for information to be provided in writing. Few lessors currently consummate lease agreements electronically; however, as standards are developed for establishing legal agreements by electronic communication, more lease contracts may be entered into by that means.

The term ''electronic communication'' is limited to a communication that can be displayed as visual text. An example is an electronic visual text message that is displayed on a screen (such as the consumer's computer monitor). Communications by telephone voicemail systems do not meet the definition of ''electronic communication'' for purposes of this regulation because they do not have the feature generally associated with a writing—visual text.

Section 213.3—General Disclosure Requirements

3(a) General requirements

Definition

Section 213.3(a) would be revised to address electronic communications under § 213.3(a)(5). Electronic communication is a visual text message electronically transmitted between a lessor and a consumer's home computer or other electronic device used by a consumer.

Agreements Between Lessors and Consumers

Section 213.3(a)(5) permits lessors to send electronic disclosures if the consumer agrees. There may be various ways that a lessor and a consumer could agree to the electronic delivery of disclosures and other information. Whether such an agreement exists between the parties would be

determined by applicable state law. The regulation would not preclude a lessor and a consumer from entering into an agreement electronically, nor does it prescribe a formal mechanism for doing so. The Board does believe, however, that consumers should be clearly informed when they are consenting to the delivery of CLA and Regulation M disclosures electronically.

Delivery Requirements for Electronic Communication

Regulation M provides that a lessor make disclosures to a consumer. The requirement is satisfied when the institution ensures that the disclosures will be presented to the consumer in a timely manner. Electronic disclosures remain subject to the format, timing, and other applicable requirements under Regulation M.

The ''Clear and Conspicuous'' Standard

Regulation M requires lessors to present required information ''clearly and conspicuously'' in writing. The ''clear and conspicuous'' requirement applies to electronic disclosures. The Board does not intend to discourage or encourage specific types of technologies. Regardless of the technology, however, the disclosures provided by electronic communication must meet the ''clear and conspicuous'' standard. A lessor must satisfy this requirement, but is generally not required to ensure that the consumer has the equipment to read the disclosures.

Consumer Ability to Retain Disclosures

Regulation M requires that written disclosures be in a form the consumer may keep. This requirement applies to disclosures provided by electronic communication. Lessors satisfy the retention requirement if, for example, disclosures can be printed or downloaded by the consumer. Thus, lessors would not be required to monitor an individual consumer's ability to retain the information, nor to take steps to find out whether the consumer has in fact retained it. The Board anticipates that, where appropriate, a lessor will inform consumers of any special technical specifications for receiving or retaining information before or at the time a consumer agrees to receive information electronically.

Current Need for Safeguards Concerning the Electronic Delivery of Disclosures

Today, most consumers receive disclosures in paper form. As electronic commerce increases and technology advances take place, obtaining disclosures by electronic communication may likely become more commonplace. Compliance and other issues will arise that suggest further interpretations. Currently, however, the use of electronic communication in the delivery of financial services is still evolving. Thus, it is difficult to fully predict the extent to which additional safeguards, if any, may be needed to ensure that consumers receive the same protections that exist for disclosures in paper form. The Board expects that lessors will provide sufficient details about the delivery of disclosures electronically. The Board plans to closely monitor the development of the electronic delivery of Regulation M disclosures, and will address compliance or other issues that may arise as appropriate.

Section 213.4—Content of Disclosures

4(f)(8) Lease term

In September 1996, Regulation M was revised to require, among other things, that lessors show consumers a mathematical progression of how a scheduled payment is derived in a motor vehicle lease. In deriving a scheduled payment, the ''total of base periodic payments'' is divided by the number of lease payments. The caption in the regulation and on the model forms refers to the number of lease payments as the ''lease term.''

For leases with monthly payments, typically the lease term and the number of payments are the same. For leases with other payment arrangements, the number of payments and the lease term typically are not the same, for example, single-payment leases. In reflecting the consumer's legal obligation to make one payment under a single-payment lease, the figure disclosed under § 213.4(f)(8) should be one, not the lease term of 24 months or 36 months, for example.

To avoid confusion, references to the ''lease term'' in § 213.4(f)(8) would be changed to ''lease payments'' with corresponding changes to the model forms in appendix A. Despite the proposed revision to the model forms, lessors would continue to use the existing form until the supply is exhausted. If properly completed, those forms comply with the requirements of the act and regulation, protecting lessors from civil liability under sections 130 of the Truth in Lending Act and 185 of the Consumer Leasing Act.

The disclosure of the lease term is not a required disclosure. If they choose, however, lessors may disclose the lease term among the segregated disclosures along with the number of lease payments, but should note that the calculation under § 213.4(f)(8) calls for the number of payments.

Section 213.7—Advertising

In April 1997, the Board revised Regulation M to implement amendments to the act contained in the Economic Growth and Regulatory Paperwork Reduction Act of 1996, which streamlined the advertising disclosures for lease transactions. (62 FR 15364, April 1, 1997) Under the act, certain terms in an advertisement will trigger the disclosure of additional information. One of them is a statement in a lease advertisement that no initial payment is required, which triggers the disclosure of additional information. This ''triggering'' term was inadvertently omitted from § 213.7(d)(1)(ii), and is being added.

Appendix A—Model Forms

The Board is proposing several technical changes to the model forms in appendix A. The model forms for open- and closed-end leases in appendix A–1 and A–2 would be revised to change the reference under the payment calculation from ''Lease term. The number of months in your lease.'' to ''Lease payments. The number of payments in your lease.'' Page 2 of the open-end model form would be revised by adding ''value'' after ''actual'' in the ''end of term liability'' disclosure (a)(3), line 3. Model form A–3 for a furniture lease would be revised by adding ''or delivery'' after the heading ''Amount due at lease signing.''

III. Proposed Commentary Provisions

Section 213.4—Content of Disclosures

4(f) Payment Calculation

4(f)(7) Total of Base Periodic Payments.

For motor vehicle leases, lessors are required under § 213.4(f) to provide a mathematical progression of how scheduled lease payments are derived. Some lessors are concerned about exposure to civil liability because if one divides the total of the base periodic payments disclosed under § 213.4(f)(7) by the number of payments in the lease disclosed under § 213.4(f)(8) and then multiplies the base periodic payment disclosed under § 213.4(f)(9) by the number of payments in the lease disclosed under § 213.4(f)(8), the result is different because of rounding.

This anomaly may be avoided by making adjustments to the rent charge. However, some lessors have requested a small tolerance for the total of base periodic payments disclosure. They believe that a tolerance of $1 would be sufficient to remedy differences due to rounding.

In response to issues concerning rounding, proposed comment 4(f)(7)-1 would be added to clarify that if the periodic payment calculation under § 213.4(f) is calculated correctly, the disclosed total of base periodic payments is correct for disclosure purposes even if it varies from the base periodic payments multiplied by the number of payments in the lease, when the difference is solely due to rounding.

4(n) Fees and Taxes

Several examples are provided in comment 4(n)-1 to illustrate when taxes are disclosed under this section. The treatment of taxes paid as a part of regularly scheduled payments is unclear. This comment would be revised to clarify that taxes that are part of the regularly scheduled payments are required to be disclosed under § 213.4(n).

Appendix A—Model Forms

Comment 2 to Appendix A provides examples of acceptable changes that may be made to the model forms. At the request of lessors, the comment would be revised to clarify that inapplicable disclosures may be deleted.

IV. Form of Comment Letters

Comment letters should refer to Docket No. R–1004 and, when possible, should use a standard typeface with a type size of 10 or 12 characters per inch. This will enable the Board to convert the text to machine-readable form through electronic scanning, and will facilitate automated retrieval of comments for review. Also, if accompanied by an original document in paper form, comments may be submitted on 3½ inch or 5¼ inch computer diskettes in any IBM-compatible DOS-based format.

V. Regulatory Flexibility Analysis

In accordance with section 3(a) of the Regulatory Flexibility Act, the Board's office of the Secretary has reviewed the proposed amendments to Regulation M. Overall, the proposed amendments are not expected to have any significant impact on small entities. The proposed rule would relieve compliance burden. The proposed rule would also give lessors flexibility in providing disclosures. A final regulatory flexibility analysis will be conducted after consideration of comments received during the public comment period.

VI. Paperwork Reduction Act

In accordance with section 3506 of the Paperwork Reduction Act of 1995 (44 U.S.C. Ch. 35; 5 CFR 1320 Appendix A.1), the Board reviewed the proposed rule under the authority delegated to the Board by the Office of Management and Budget.

The Federal Reserve has no data with which to estimate the burden the proposed revised requirements would impose on state member banks. Lessors would be able to use electronic communication to provide disclosures and other information required by this regulation rather than having to make the information available in paper form. The use of electronic communication in home banking and financial services may reduce the paperwork burden of lessors or merely may reduce the dollar cost.

The Federal Reserve requests comments from lessors, especially state member banks, that will help to estimate the number and burden of the various disclosures that would be made in the first year this rule is effective. Comments are invited on: (a) Whether the proposed revised collection of information is necessary for the proper performance of the Federal Reserve's functions; including whether the information has practical utility; (b) the accuracy of the Federal Reserve's estimate of the burden of the proposed revised information collection, including the cost of compliance; (c) ways to enhance the quality, utility, and clarity of the information to be collected; and (d) ways to minimize the burden of information collection on respondents, including through the use of automated collection techniques or other forms of information technology. Comments on the collection of information should be sent to the Office of Management and Budget, Paperwork Reduction Project (7100–0202), Washington, DC 20503, with copies of such comments to be sent to Mary M. McLaughlin, Chief, Financial Reports Section, Division of Research and Statistics, Mail Stop 97, Board of Governors of the Federal Reserve System, Washington, DC 20551.

The collection of information requirements in this proposed revised regulation are found in 12 CFR 213.3, 213.4, 213.5, 213.7, 213.8, and appendix A. This information is mandatory (15 U.S.C. 1667 *et seq.*) to ensure adequate disclosure of basic terms, costs, and rights relating to services affecting consumers using certain home-banking services and consumers receiving certain disclosures by electronic communication. The respondents/recordkeepers are for-profit, including small businesses. Records, required to evidence compliance with the regulation, must be retained for twenty-four months.

The Board also proposes to extend the Recordkeeping and Disclosure Requirements in Connection with Regulation M (OMB No. 7100–0202) for three years. The current estimated total annual burden for this information collection is 11,179 hours, as shown in the table below. The proposed clarifications of some leasing terms are not estimated to affect the paperwork burden. These amounts reflect the burden estimate of the Federal Reserve System for the state member banks under its supervision, of which relatively few engage in consumer leasing. This regulation applies to all types of lessors, not just state member banks. However, under Paperwork Reduction Act regulations, the Federal Reserve accounts for the burden of the paperwork associated with the regulation only for state member banks. Other agencies account for the paperwork burden for the institutions they supervise.

	Number of respondents	Estimated annual frequency	Estimated response time	Estimated annual burden hours
Disclosures	310	120	18 minutes	11,160
Advertising	15	3	25 minutes	19
Total				11,179

Consumer lease information in or referred to by advertisements is available to the public. Disclosures of the costs, liabilities, and terms of consumer lease transactions relating to specific leases are not publicly available. Because the Federal Reserve does not collect any information, no issue of confidentiality under the Freedom of Information Act normally arises. However, the information may be protected from disclosure under the

exemptions (b)(4), (6), and (8) of the Freedom of Information Act (5 U.S.C. 522 (b)). An agency may not conduct or sponsor, and an organization is not required to respond to, an information collection unless it displays a currently valid OMB control number. The OMB control number for the Recordkeeping and Disclosure Requirements in Connection with Regulation M is 7100–0202.

List of Subjects in 12 CFR Part 213

Advertising, Federal Reserve System, Reporting and recordkeeping requirements, Truth in lending.

Text of Proposed Revisions

Certain conventions have been used to highlight the proposed changes to Regulation M. New language is shown inside bold-faced arrows, while language that would be removed is set off with brackets.

For the reasons set forth in the preamble, the Board proposes to amend Regulation M, 12 CFR part 213, as set forth below:

PART 213—CONSUMER LEASING (REGULATION M)

1. The authority citation for part 213 would continue to read as follows:

Authority: 15 U.S.C. 1604.

2. Section 213.3 would be amended by adding a new paragraph (a)(5) to read as follows:

§ 213.3 General disclosure requirements.

(a) *General requirements.* * * *

►(5) *Electronic communication.* For purposes of this regulation, the term *electronic communication* means a message transmitted electronically between a consumer and a lessor in a format that allows visual text to be displayed on equipment such as a personal computer monitor. A lessor and a consumer may agree to send by electronic communication the disclosures required by this regulation to be provided in writing. Any electronic communication must comply with paragraph (a) of this section.◄

* * * * *

3. Section 213.4 would be amended by revising paragraph (f)(8) to read as follows:

§ 213.4 Content of disclosures.

* * * * *

(f) *Payment calculation.* * * *

(8) [*Lease term.* The lease term with a description such as ''the number of periods of repayment in your lease.''] ►Lease payments. The lease payments with a description such as ''the number of payments in your lease.''◄

* * * * *

4. Section 213.7 would be amended by revising paragraph (d)(1)(ii) to read as follows:

§ 213.7 Advertising.

* * * * *

(d) *Advertisement of terms that require additional disclosure.*—(1) *Triggering terms.* * * *

(ii) A statement of any capitalized cost reduction or other payment ►or that no payment is◄ required ►, ◄prior to or at consummation ►or by delivery, if delivery occurs after consummation.◄ [or that no payment is required.]

* * * * *

5. Appendix A to part 213 would be amended by revising Appendix A–1, Appendix A–2, and Appendix A–3 to read as follows:

BILLING CODE 6210–01–P

Appendix A-1 Model Open-End or Finance Vehicle Lease Disclosures

Federal Consumer Leasing Act Disclosures

Date _____

Lessor(s) _____ **Lessee(s)** _____

Amount Due at Lease Signing or Delivery (Itemized below)* $ _____	**Monthly Payments** Your first monthly payment of $ _____ is due on _____, followed by _____ payments of $ _____ due on the _____ of each month. The total of your monthly payments is $ _____.	**Other Charges** (not part of your monthly payment) Disposition fee (if you do not purchase the vehicle) $ _____ _____ _____ Total $ _____	**Total of Payments** (The amount you will have paid by the end of the lease) $ _____ You will owe an additional amount if the actual value of the vehicle is less than the residual value.

*** Itemization of Amount Due at Lease Signing or Delivery**

Amount Due At Lease Signing or Delivery:		**How the Amount Due at Lease Signing or Delivery will be paid:**	
Capitalized cost reduction	$ _____	Net trade-in allowance	$ _____
First monthly payment	_____	Rebates and noncash credits	_____
Refundable security deposit	_____	Amount to be paid in cash	_____
Title fees	_____	_____	_____
Registration fees	_____		
_____	_____		
Total	$ _____	Total	$ _____

Your monthly payment is determined as shown below:

Gross capitalized cost. The agreed upon value of the vehicle ($ _____) and any items you pay over the lease term (such as service contracts, insurance, and any outstanding prior credit or lease balance) ..... $ _____

If you want an itemization of this amount, please check this box. ☐

Capitalized cost reduction. The amount of any net trade-in allowance, rebate, noncash credit, or cash you pay that reduces the gross capitalized cost ..... − _____

Adjusted capitalized cost. The amount used in calculating your base monthly payment ..... = _____

Residual value. The value of the vehicle at the end of the lease used in calculating your base monthly payment ..... − _____

Depreciation and any amortized amounts. The amount charged for the vehicle's decline in value through normal use and for other items paid over the lease term ..... = _____

Rent charge. The amount charged in addition to the depreciation and any amortized amounts ..... + _____

Total of base monthly payments. The depreciation and any amortized amounts plus the rent charge ..... = _____

Lease payments. The number of payments in your lease ..... ÷ _____

Base monthly payment ..... = _____

Monthly sales/use tax ..... + _____

_____ ..... + _____

Total monthly payment ..... =$ _____

Rent and other charges. The total amount of rent and other charges imposed in connection with your lease $ _____ .

Early Termination. You may have to pay a substantial charge if you end this lease early. The charge may be up to several thousand dollars. The actual charge will depend on when the lease is terminated. The earlier you end the lease, the greater this charge is likely to be.

Excessive Wear and Use. You may be charged for excessive wear based on our standards for normal use [and for mileage in excess of _____ miles per year at the rate of _____ per mile].

Purchase Option at End of Lease Term. [You have an option to purchase the vehicle at the end of the lease term for $ _____ [and a purchase option fee of $ _____].] [You do not have an option to purchase the vehicle at the end of the lease term.]

Other Important Terms. See your lease documents for additional information on early termination, purchase options and maintenance responsibilities, warranties, late and default charges, insurance, and any security interest, if applicable.

[The following provisions are the nonsegregated disclosures required under Regulation M.]

Description of Leased Property				
Year	Make	Model	Body Style	Vehicle ID #

Official Fees and Taxes. The total amount you will pay for official and license fees, registration, title, and taxes over the term of your lease, whether included with your monthly payments or assessed otherwise: $ _____ .

Insurance. The following types and amounts of insurance will be acquired in connection with this lease:

_____ .

_____ We (lessor) will provide the insurance coverage quoted above for a total premium cost of $ _____.

_____ You (lessee) agree to provide insurance coverage in the amount and types indicated above.

End of Term Liability. (a) The residual value ($ _____) of the vehicle is based on a reasonable, good faith estimate of the value of the vehicle at the end of the lease term. If the actual value of the vehicle at that time is greater than the residual value, you will have no further liability under this lease, except for other charges already incurred [and are entitled to a credit or refund of any surplus.] If the actual value of the vehicle is less than the residual value, you will be liable for any difference up to $ _____ (3 times the monthly payment). For any difference in excess of that amount, you will be liable only if:
1. Excessive use or damage [as described in paragraph ____] [representing more than normal wear and use] resulted in an unusually low value at the end of the term.
2. The matter is not otherwise resolved and we win a lawsuit against you seeking a higher payment.
3. You voluntarily agree with us after the end of the lease term to make a higher payment.
Should we bring a lawsuit against you, we must prove that our original estimate of the value of the leased property at the end of the lease term was reasonable and was made in good faith. For example, we might prove that the actual value was less than the original estimated value, although the original estimate was reasonable, because of an unanticipated decline in value for that type of vehicle. We must also pay your attorney's fees.
(b) If you disagree with the value we assign to the vehicle, you may obtain, at your own expense, from an independent third party agreeable to both of us, a professional appraisal of the _____ value of the leased vehicle which could be realized at sale. The appraised value shall then be used as the actual value.

Standards for Wear and Use. The following standards are applicable for determining unreasonable or excess wear and use of the leased vehicle:

_____ .

Maintenance.
[You are responsible for the following maintenance and servicing of the leased vehicle:

_____].

[We are responsible for the following maintenance and servicing of the leased vehicle:

_____].

Warranties. The leased vehicle is subject to the following express warranties:

_____ .

Early Termination and Default. (a) You may terminate this lease before the end of the lease term under the following conditions:

_____ .

The charge for such early termination is:

_____ .

(b) We may terminate this lease before the end of the lease term under the following conditions:

_____ .

Upon such termination we shall be entitled to the following charge(s) for:

_____ .

(c) To the extent these charges take into account the value of the vehicle at termination, if you disagree with the value we assign to the vehicle, you may obtain, at your own expense, from an independent third party agreeable to both of us, a professional appraisal of the _____ value of the leased vehicle which could be realized at sale. The appraised value shall then be used as the actual value.

Security Interest. We reserve a security interest of the following type in the property listed below to secure performance of your obligations under this lease:

_____ .

Late Payments. The charge for late payments is: _____ .

Option to Purchase Leased Property Prior to the End of the Lease. [You have an option to purchase the leased vehicle prior to the end of the term. The price will be [$ _____ /[the method of determining the price].] [You do not have an option to purchase the leased vehicle.]

Appendix A-2 Model Closed-End or Net Vehicle Lease Disclosures

Federal Consumer Leasing Act Disclosures

Date _____

Lessor(s) _____ **Lessee(s)** _____

Amount Due at Lease Signing or Delivery (Itemized below)* $ _____	**Monthly Payments** Your first monthly payment of $ _____ is due on _____, followed by _____ payments of $ _____ due on the _____ of each month. The total of your monthly payments is $ _____.	**Other Charges** (not part of your monthly payment) Disposition fee (if you do not purchase the vehicle) $ _____ _____ _____ Total $ _____	**Total of Payments** (The amount you will have paid by the end of the lease) $ _____

*** Itemization of Amount Due at Lease Signing or Delivery**

Amount Due At Lease Signing or Delivery:

Capitalized cost reduction	$ _____
First monthly payment	_____
Refundable security deposit	_____
Title fees	_____
Registration fees	_____
_____	_____
Total	$ _____

How the Amount Due at Lease Signing or Delivery will be paid:

Net trade-in allowance	$ _____
Rebates and noncash credits	_____
Amount to be paid in cash	_____
_____	_____
Total	$ _____

Your monthly payment is determined as shown below:

Gross capitalized cost. The agreed upon value of the vehicle ($ _____) and any items you pay over the lease term (such as service contracts, insurance, and any outstanding prior credit or lease balance) ..... $ _____

If you want an itemization of this amount, please check this box. ☐

Capitalized cost reduction. The amount of any net trade-in allowance, rebate, noncash credit, or cash you pay that reduces the gross capitalized cost ..... – _____

Adjusted capitalized cost. The amount used in calculating your base monthly payment ..... = _____

Residual value. The value of the vehicle at the end of the lease used in calculating your base monthly payment ..... – _____

Depreciation and any amortized amounts. The amount charged for the vehicle's decline in value through normal use and for other items paid over the lease term ..... = _____

Rent charge. The amount charged in addition to the depreciation and any amortized amounts ..... + _____

Total of base monthly payments. The depreciation and any amortized amounts plus the rent charge ..... = _____

Lease payments. The number of payments in your lease ..... ÷ _____

Base monthly payment ..... = _____

Monthly sales/use tax ..... + _____

_____ ..... + _____

Total monthly payment ..... =$ _____

Early Termination. You may have to pay a substantial charge if you end this lease early. The charge may be up to several thousand dollars. The actual charge will depend on when the lease is terminated. The earlier you end the lease, the greater this charge is likely to be.

Excessive Wear and Use. You may be charged for excessive wear based on our standards for normal use [and for mileage in excess of _____ miles per year at the rate of _____ per mile].

Purchase Option at End of Lease Term. [You have an option to purchase the vehicle at the end of the lease term for $ _____ [and a purchase option fee of $ _____].] [You do not have an option to purchase the vehicle at the end of the lease term.]

Other Important Terms. See your lease documents for additional information on early termination, purchase options and maintenance responsibilities, warranties, late and default charges, insurance, and any security interest, if applicable.

[The following provisions are the nonsegregated disclosures required under Regulation M.]

Description of Leased Property				
Year	Make	Model	Body Style	Vehicle ID #

Official Fees and Taxes. The total amount you will pay for official and license fees, registration, title, and taxes over the term of your lease, whether included with your monthly payments or assessed otherwise: $ _____ .

Insurance. The following types and amounts of insurance will be acquired in connection with this lease:

_____ .

_____ We (lessor) will provide the insurance coverage quoted above for a total premium cost of $ _____.

_____ You (lessee) agree to provide insurance coverage in the amount and types indicated above.

Standards for Wear and Use. The following standards are applicable for determining unreasonable or excess wear and use of the leased vehicle:

_____

Maintenance.
[You are responsible for the following maintenance and servicing of the leased vehicle:

_____].

[We are responsible for the following maintenance and servicing of the leased vehicle:

_____].

Warranties. The leased vehicle is subject to the following express warranties:

_____ .

Early Termination and Default. (a) You may terminate this lease before the end of the lease term under the following conditions:

_____ .

The charge for such early termination is:

_____ .

(b) We may terminate this lease before the end of the lease term under the following conditions:

_____ .

Upon such termination we shall be entitled to the following charge(s) for:

_____ .

(c) To the extent these charges take into account the value of the vehicle at termination, if you disagree with the value we assign to the vehicle, you may obtain, at your own expense, from an independent third party agreeable to both of us, a professional appraisal of the _____ value of the leased vehicle which could be realized at sale. The appraised value shall then be used as the actual value.

Security Interest. We reserve a security interest of the following type in the property listed below to secure performance of your obligations under this lease:

_____

Late Payments. The charge for late payments is: _____

Option to Purchase Leased Property Prior to the End of the Lease. [You have an option to purchase the leased vehicle prior to the end of the term. The price will be [$ _____ /[the method of determining the price].] [You do not have an option to purchase the leased vehicle.]

Appendix A-3 Model Furniture Lease Disclosures

FEDERAL CONSUMER LEASING ACT DISCLOSURE STATEMENT

Date _____

Lessor(s) _____ **Lessee(s)** _____

Description of Leased Property

Item	Color	Stock #	Mfg.	Quantity

Amount Due at Lease Signing or Delivery	**Monthly Payments**	**Other Charges** (not part of	**Total of Payments** (The amount you will have paid by the end of the lease)
First monthly payment $ _____ Refundable security deposit $ _____ Delivery/Installation fee $ _____ _____ $ _____ Total $ _____	Your first monthly payment of $ _____ is due on _____, followed by _____ payments of $ _____ due on the _____ of each month. The total of your monthly payments is $ _____.	Pick-up fee $ _____ _____ $ _____ Total $ _____	$ _____

Purchase Option at End of Lease Term. [You have an option to purchase the leased property at the end of the lease term for $ _____ [with a purchase option fee of $ _____].] [You do not have an option to purchase the leased property at the end of the lease term.]

Other Important Terms. See your lease documents for additional information on early termination, purchase options and maintenance responsibilities, warranties, late and default charges, insurance, and any security interest, if applicable.

[The following provisions are the nonsegregated disclosures required under Regulation M.]

Official Fees and Taxes. The total amount you will pay for official fees, and taxes over the term of your lease, whether included with your monthly payments or assessed otherwise: $ _____ .

Insurance. The following types and amounts of insurance will be acquired in connection with this lease: _____
_____ .

_____ We (lessor) will provide the insurance coverage quoted above for a total premium cost of $ _____ .

_____ You (lessee) agree to provide insurance coverage in the amount and types indicated above.

Standards for Wear and Use. The following standards are applicable for determining unreasonable or excess wear and use of the leased property:
_____

Maintenance.

[You are responsible for the following maintenance and servicing of the leased property:
_____.]

[We are responsible for the following maintenance and servicing of the leased property:
_____.]

Warranties. The leased property is subject to the following express warranties:
_____ .

Early Termination and Default. (a) You may terminate this lease before the end of the lease term under the following conditions:
_____ .

The charge for such early termination is: _____ .

(b) We may terminate this lease before the end of the lease term under the following conditions: _____ .

Upon such termination we shall be entitled to the following charge(s) for: _____ .

Early Termination and Default. (continued)

(c) To the extent these charges take into account the value of the leased property at the end of the lease term, if you disagree with the value we assign to the property, you may obtain, at your own expense, from an independent third party agreeable to both of us, a professional appraisal of the _____ value of the property which could be realized at sale. The appraised value shall then be used as the actual value.

Security Interest. We reserve a security interest of the following type in the property listed below to secure performance of your obligations under this lease: _____.

Late Payments. The charge for late payments is: _____.

Purchase Option Prior to the End of the Lease Term.

[You have an option to purchase the leased property prior to the end of the term. The price will be [$ _____]/the method of determining the price].]

[You do not have an option to purchase the leased property.]

BILLING CODE 6210–01–C

6. In Supplement I to Part 213—Official Staff Commentary to Regulation M, under Section 213.4—Content of Disclosures, the following amendments would be made:

a. A new paragraph heading ''4(f)(7) *Total of base periodic payments*'' would be added in numerical order and a new paragraph 1. would be added immediately below the new heading.

b. Under (4)(n) *Fees and taxes,* paragraph 1.ii. would be revised.

The addition and revision would read as follows:

Supplement I to Part 213—Official Staff Commentary to Regulation M

* * * * *

Section 213.4—Content of Disclosures

* * * * *

►4(f)(7) Total of base periodic payments.

1. *Accuracy of disclosure.* Lessors are deemed to be in compliance with § 213.4(f)(7) of the regulation if due to rounding in a manner the lessor arrives at the base periodic payment, the amount disclosed under § 213.4(f)(7), the total of base periodic payments, differs from the base periodic payment disclosed under § 213.4(f)(9), multiplied by the number of payments under the lease disclosed under § 213.4(f)(8).◄

* * * * *

4(n) Fees and taxes.

1. *Treatment of certain taxes.* * * *

ii. Taxes that are part of regularly scheduled payments are reflected in the disclosure under §§ 213.4(c) ►and 213.4(n)◄ and itemized under § 213.4(f)(10).

* * * * *

7. In Supplement I to Part 213, under Appendix A—Model Forms, paragraph 2.v. would be revised as follows:

* * * * *

Appendix A—Model Forms

* * * * *

2. *Examples of acceptable changes.* * * *

v. Deleting ►or blocking out◄ inapplicable disclosures [by blocking out], filling in ''N/A'' (not applicable) or ''0,'' crossing out, leaving blanks, checking a box for applicable items, or circling applicable items (this should facilitate use of multipurpose standard forms[.])►.◄

* * * * *

By order of the Board of Governors of the Federal Reserve System, March 12, 1998.

William W. Wiles,

Secretary of the Board.

[FR Doc. 98–6990 Filed 3–24–98; 8:45 am]

BILLING CODE 6210–01–P

FEDERAL RESERVE SYSTEM

12 CFR Part 226

[Regulation Z; Docket No. R–1005]

Truth in Lending

AGENCY: Board of Governors of the Federal Reserve System.

ACTION: Proposed rule.

SUMMARY: The Board is publishing for comment a proposed rule amending Regulation Z, which implements the Truth in Lending Act. The proposal would permit creditors to use electronic communication (for example, communication via personal computer and modem) to provide disclosures required by the act and regulation, if the consumer agrees to such delivery.

DATES: Comments must be received by May 15, 1998.

ADDRESSES: Comments should refer to Docket No. R–1005, and may be mailed to William W. Wiles, Secretary, Board of Governors of the Federal Reserve System, 20th Street and Constitution Avenue, N.W., Washington, DC 20551. Comments also may be delivered to Room B–2222 of the Eccles Building between 8:45 a.m. and 5:15 p.m. weekdays, or to the guard station in the Eccles Building courtyard on 20th Street, N.W. (between Constitution Avenue and C Street) at any time. Comments may be inspected in Room MP–500 of the Martin Building between 9:00 a.m. and 5:00 p.m. weekdays, except as provided in 12 CFR 261.12 of the Board's Rules Regarding Availability of Information.

FOR FURTHER INFORMATION CONTACT: Michael Hentrel, Obrea Poindexter, or Pamela Morris Blumenthal, Staff Attorneys, Division of Consumer and Community Affairs, at (202) 452–3667 or (202) 452–2412. For the hearing impaired *only,* Telecommunications Device for the Deaf (TDD), contact Diane Jenkins, at (202) 452–3544.

SUPPLEMENTARY INFORMATION:

I. Background

The purpose of the Truth in Lending Act (TILA), 15 U.S.C. 1601 *et seq.*, is to promote the informed use of consumer credit by requiring disclosures about its terms and cost. The act requires creditors to disclose the cost of credit as a dollar amount (the finance charge) and as an annual percentage rate (the APR). Uniformity in creditors' disclosures is intended to assist consumers in comparison shopping. The TILA requires additional disclosures for loans secured by consumers' homes and permits consumers to rescind certain transactions that involve their principal dwellings. The act is implemented by the Board's Regulation Z (12 CFR Part 226).

As part of the Regulatory Planning and Review Program and its review of regulations under section 303 of the Riegle Community Development and Regulatory Improvement Act of 1994 (12 U.S.C. 4803), the Board determined that the use of electronic communication for delivery of information to consumers that is required by federal consumer financial services and fair lending laws could effectively reduce regulatory compliance burden without adversely affecting consumer protections. Thus, the Board has been considering the issue and closely following the development of electronic communication. For example in May 1996, the Board proposed to amend Regulation E (Electronic Fund Transfers) to permit disclosures to be provided electronically. In March 1997, the Board issued an amendment to the staff commentary to Regulation CC (Availability of Funds and Collection of Checks) that allowed financial institutions to send notices electronically. (62 FR 13801, March 18, 1997.)

Having considered the comments received on the Regulation E proposal and other rulemakings, the Board now proposes to amend Regulation Z to allow creditors to provide Regulation Z disclosures electronically; such disclosures would remain subject to any applicable timing, format, and other requirements of the act and the regulation. Concurrently, the Board is issuing similar proposed revisions to address electronic communication under Regulations DD (Truth in Savings), B (Equal Credit Opportunity), and M (Consumer Leasing), published elsewhere in today's **Federal Register**. In addition, the Board has issued an interim rule under Regulation E, also published elsewhere in today's **Federal Register** so that financial institutions can implement systems to provide Electronic Fund Transfer Act disclosures electronically.

II. Proposed Regulatory Revisions

The TILA and Regulation Z require several disclosures to be provided to consumers in writing. The requirement that disclosures be in writing has been presumed to require that creditors provide paper documents. However, under many laws that call for information to be in writing, information in electronic form is considered to be ''written.'' Information produced, stored, or communicated by computer is also generally considered to

be a writing at least where visual text is involved.

Therefore, pursuant to its authority under section 105 of the TILA, the Board proposes to amend Regulation Z to permit creditors to use electronic communication where the regulation calls for information to be provided in writing. The term ''electronic communication'' is limited to a communication that can be displayed as visual text. An example is an electronic visual text message that is displayed on a screen (such as the consumer's computer monitor). Communications by telephone voicemail systems do not meet the definition of ''electronic communication'' for purposes of this regulation because they do not have the feature generally associated with a writing—visual text.

Section 226.2(a)(27) would be revised to include the definition of electronic communication for purposes of Regulation Z. Under the definition, electronic communication is a visual text message electronically transmitted between a creditor and a consumer's home computer or other electronic device used by a consumer. Sections 226.5, 226.17 and 226.31 would be revised to address electronic communication. These sections contain general disclosure requirements for open-end credit, closed-end credit, and certain home secured loans referred to as ''HOEPA loans.''

Agreements Between Creditors and Consumers

Sections 226.5(a)(5), 226.17(a)(3), and 226.31(b)(2) would permit creditors to send electronic disclosures if the consumer agrees. There may be various ways that a creditor and a consumer could agree to the electronic delivery of disclosures and other information. Whether such an agreement exists between the parties would be determined by applicable state law. The regulation would not preclude a creditor and a consumer from entering into an agreement electronically, nor does it prescribe a formal mechanism for doing so. The Board does believe, however, that consumers should be clearly informed when they are consenting to the delivery of TILA disclosures and other information electronically.

Delivery Requirements for Electronic Communication

Regulation Z provides that an institution ''furnish,'' ''provide,'' ''send,'' ''deliver,'' or ''mail'' information to a consumer. Generally, the delivery requirement anticipates that a creditor will deliver the information—typically by mail—to an address designated by the consumer. For a paper communication, a creditor would not satisfy that requirement by making disclosures ''available'' to consumers, for example, at a creditor's office or other location. The Board believes that consumers receiving disclosures by electronic communication should have protections regarding delivery similar to those afforded consumers receiving disclosures in paper form. Simply posting information on an Internet site without some appropriate notice and instructions about how the consumer may obtain the required information would not satisfy the requirement.

The requirement to send disclosures to a consumer would be satisfied when the institution ensures that the disclosures will be displayed in a timely manner. For example, under Regulation Z, open-end credit initial disclosures generally must be provided before the first transaction under the plan. Assume that a consumer uses a personal computer to apply for a plan and consents to the electronic delivery of the initial disclosures. If the disclosures automatically appear on the computer screen before the consumer commits to the plan (in accordance with the format, timing rules and any other requirements of the act and regulation), the creditor would satisfy the requirement to provide (deliver or transmit) disclosures to the consumer.

As a practical matter, there may be little distinction between sending or delivering electronic disclosures and making them ''available.'' Creditors have flexibility in how they may deliver electronic disclosures to consumers, including, but not limited to, the following examples. They may send disclosures to a consumer-designated electronic mail address or they may designate a location on a website where the consumer enters a personal identification number or other identifier to access required information. In the scenario described above, assume that the consumer applies for a credit plan, receives the initial disclosures at that time, and agrees to receive all Regulation Z disclosures electronically. Subsequent disclosures sent to the designated address or placed at a designated location (for example, periodic statements or change-in-terms notices) would satisfy the delivery requirements of the regulation.

Electronic communication would remain subject to any timing or other applicable requirements under Regulation Z. For example, an electronic change in terms notice required by § 226.9(c) of Regulation Z must still be provided at least fifteen days in advance of the change. The Board solicits comment on whether further guidance is needed on how to comply wth the timing requirements when a notice is posted on an Internet website.

Section 226.5a—Credit and Charge Card Applications and Solicitations

The act and regulation require credit and charge card issuers to provide credit disclosures in certain applications and solicitations to open credit and charge card accounts. Format and content requirements differ for applications or solicitations sent in direct mail campaigns and for those made available to the general public such as in ''take-ones'' and catalogs or magazines. Disclosures accompanying direct mail applications and solicitations must be presented in a tabular format. Disclosures in a take-one also may be presented in a table with the same content as for direct mail, but the act and regulation permit alternatives as to format and content. The APR disclosed in a direct mail solicitation must be accurate within 60 days of mailing; in a take-one, within 30 days of printing.

Consumers could obtain an electronically sent credit or charge card application in much the same way as either opening a direct-mail piece or browsing through a magazine. Under the proposal, if a card issuer sends an application or solicitation to a consumer by electronic means that alert the consumer that the application or solicitation has arrived, such as electronic mail, the card issuer would follow the direct-mail rules under § 226.5a. If an issuer merely makes an application or solicitation publicly available, such as by posting it on an Internet site, the issuer would follow the ''take-one'' rules. The Board believes that in the context of electronic communications, ''printing'' is the equivalent of updating a site on the Internet, for example. Thus, where the ''take-one'' rules apply, consumers would view APRs that are accurate within 30 days of the card issuer's most recent update of the Internet site. Where the direct-mail rules apply, the APRs disclosed would be accurate within 60 days of the sending of the electronic application or solicitation. The Board requests comment on any compliance difficulties this approach may pose, and possible suggestions for their resolution.

Section 226.17(g)—Mail or Telephone Orders—Delay in Disclosures

Section 226.17(g) allows credit to be offered via mail, telephone, or other electronic means and full TILA disclosures to be deferred as long as a certain number of disclosures are ''made

available in written form.'' The rationale underlying the deferral is that, in some instances, the creditor cannot provide disclosures in the form required by the regulation because of the lack of face to face or direct interaction with the consumer. Because loan products offered by electronic communication (for example, those offered on the Internet) do not appear to pose the same difficulty, the Board believes that this deferral should not apply to electronic disclosures. The Board believes that permitting a deferral would not effectuate the purpose of the TILA to provide consumers with information about credit terms prior to being obligated. Thus, the proposed rule provides that specific disclosures must be provided before consummation of the transaction.

Requirement That Information Be ''Clear and Conspicuous''

The act and Regulation Z require creditors to present required information ''clearly and conspicuously.'' Under the proposed rule, the ''clear and conspicuous'' requirement applies to electronic communication. The Board does not intend to discourage or encourage specific types of technologies. Regardless of technology, however, the disclosures provided by electronic communication must meet the ''clear and conspicuous'' standard. While a creditor is generally not required to ensure that the consumer has the equipment to read the disclosures, in some circumstances a creditor would have the responsibility of making sure the proper equipment is in place. For example, to use electronic disclosures for credit offered through terminals in a creditor's lobby, or through kiosks located in public or other places, the creditor must ensure that the equipment meets the clear and conspicuous standard for TILA disclosures that are being provided electronically.

Consumer Ability to Retain Disclosures

Regulation Z requires that many of its written disclosures be in a form that the consumer may keep. This requirement would apply to disclosures provided by electronic communication. Creditors would satisfy the retention requirement if, for example, disclosures can be printed or downloaded by the consumer. The requirements for electronic delivery should be similar to the current paper requirements, where creditors generally must mail or deliver the information to the consumer but need not ensure that the consumer reads or retains it. Thus, creditors would not be required to monitor an individual consumer's ability to retain the information, nor to take steps to find out whether the consumer has in fact retained it. The Board anticipates that, where appropriate, a creditor would provide special technical specifications for receiving or retaining information before or at the time a consumer agrees to receive information electronically.

As in the case of the ''clear and conspicuous'' standard discussed above, in circumstances where the creditor (or a network of which the creditor is a member) controls the equipment to be used for the service—such as terminals in institution lobbies or kiosks in shopping centers—the creditor would have the responsibility of ensuring retainability. Provided that the delivery requirements (discussed above) are satisfied, methods for fulfilling this requirement could include, for example, printers incorporated into terminals or a screen message offering to transmit the disclosure to the consumer's electronic mail or post office address.

Signature Requirements Under Regulation Z

There are two signature requirements under Regulation Z. Under § 226.4(d) consumers may elect to accept credit life insurance by signing or initialing an affirmative written request after receiving disclosure about the insurance. Under § 226.23 (and the corresponding model forms and official staff commentary) consumers may cancel certain home-secured loans or waive this right by providing a written signed notice to the creditor. The Board indicated in the May 1996 Regulation E proposal that any electronic authentication method should provide the same assurance as a signature in a paper-based system, and cited security codes and digital signatures as examples of authentication devices that might meet the requirements. The Board is interested in learning about other ways in which authentication in an electronic environment might take the place of the consumer's signature.

Current Need for Safeguards Concerning the Electronic Delivery of Disclosures

Today, most consumers receive federal disclosures in paper form. As electronic commerce and electronic banking increase and technological advances take place, obtaining disclosures by electronic communication will likely become more commonplace. Currently, however, the use of electronic communication in the delivery of financial services is still evolving. Thus, it is difficult to fully predict the extent to which additional safeguards, if any, may be needed to ensure that consumers receive the same protections that exist for disclosures in paper form. The Board expects that creditors subject to the TILA and Regulation Z will provide sufficient details about the delivery of disclosures. The Board plans to closely monitor the development of electronic delivery of TILA disclosures and other information, and will address compliance or other issues that may arise as appropriate.

III. Form of Comment Letters

Comment letters should refer to Docket No. R–1005 and, when possible, should use a standard typeface with a type size of 10 or 12 characters per inch. This will enable the Board to convert the text to machine-readable form through electronic scanning, and will facilitate automated retrieval of comments for review. Also, if accompanied by an original document in paper form, comments may be submitted on 3½ inch or 5¼ inch computer diskettes in any IBM-compatible DOS-based format.

IV. Regulatory Flexibility Analysis

In accordance with section 3(a) of the Regulatory Flexibility Act, the Board's Office of the Secretary has reviewed the proposed amendments to Regulation Z. Overall, the proposed amendments are not expected to have any significant impact on small entities. The proposed rule would relieve compliance burden by giving creditors flexibility in providing disclosures. A final regulatory flexibility analysis will be conducted after consideration of comments received during the public comment period.

V. Paperwork Reduction Act

In accordance with section 3506 of the Paperwork Reduction Act of 1995 (44 U.S.C. Ch. 35; 5 CFR Part 1320 Appendix A.1), the Board reviewed the proposed revisions under the authority delegated to the Board by the Office of Management and Budget.

The Federal Reserve has no data with which to estimate the burden the proposed revised requirements would impose on state member banks. Creditors would be able to use electronic communication to provide disclosures and other information required by this regulation rather than having to print and mail the information in paper form. The use of electronic communication in home banking and financial services may reduce the paperwork burden on creditors and financial institutions or merely may reduce the dollar cost.

The Federal Reserve requests comments from creditors, especially

state member banks, that will help to estimate the number and burden of the various disclosures that would be made in the first year this rule is effective. Comments are invited on: (a) Whether the proposed revised collection of information is necessary for the proper performance of the Federal Reserve's functions, including whether the information has practical utility; (b) the accuracy of the Federal Reserve's estimate of the burden of the proposed revised information collection, including the cost of compliance; (c) ways to enhance the quality, utility, and clarity of the information to be collected; and (d) ways to minimize the burden of information collection on respondents, including through the use of automated collection techniques or other forms of information technology. Comments on the collection of information should be sent to the Office of Management and Budget, Paperwork Reduction Project (7100–0199), Washington, DC 20503, with copies of such comments to be sent to Mary M. McLaughlin, Chief, Financial Reports Section, Division of Research and Statistics, Mail Stop 97, Board of Governors of the Federal Reserve System, Washington, DC 20551.

The collection of information requirements in this proposed revised regulation are found throughout 12 CFR Part 226 and in Appendices F, G, H, J, K, and L. This information is mandatory (15 U.S.C. 1604(a)) to ensure the disclosure of certain credit costs and terms to consumers, at or before the time consumers enter into a consumer credit transaction and when the availability of consumer credit on particular terms is advertised. The purpose of the disclosures is to encourage competition among various credit sources through informed comparison-shopping by consumers. The respondents/recordkeepers are for-profit financial institutions, including small businesses. Creditors are also required to retain records as evidence of compliance for twenty-four months.

The Board also proposes to extend the Recordkeeping and Disclosure Requirements in Connection with Regulation Z (OMB No. 7100–0199) for three years. The current estimated total annual burden for this information collection is 1,878,846 hours, as shown in the table below. These amounts reflect the burden estimate of the Federal Reserve System for the 996 state member banks under its supervision. This regulation applies to all types of creditors, not just state member banks. However, under Paperwork Reduction Act regulations, the Federal Reserve accounts for the burden of the paperwork associated with the regulation only for state member banks. Other agencies account for the paperwork burden for the institutions they supervise.

	Number of respondents	Estimated annual frequency	Estimated response time	Estimated annual burden hours
Open-end credit:				
Initial terms	996	1,150	2.5 minutes	47,725
Change in terms	996	2,500	1.0 minute	41,500
Periodic Statements	996	86,250	45.0 seconds	1,073,813
Error resolution	996	8	15.0 minutes	1,992
Credit and charge card accounts:				
Advance disclosures	996	29,750	10.0 seconds	82,308
Renewal notice	996	10,700	5.0 seconds	14,802
Insurance notice	996	60	15.0 seconds	249
Home equity plans:				
Advance disclosure	996	120	2.0 minutes	3,984
Change in terms	996	3	2.0 minutes	100
Closed-end credit disclosures	996	5,750	6.4 minutes	610,880
Advertising	996	3	30.0 minutes	1,493
Total				1,878,846

General disclosures of credit terms that appear in advertisements or take-one applications are available to the public. Since the Federal Reserve does not collect any information, no issue of confidentiality normally arises. However, the information may be protected from disclosure under the exemptions (b)(4), (6), and (8) of the Freedom of Information Act (5 U.S.C. 522(b)). Transaction- or account-specific disclosures and billing error allegations are not publicly available and are confidential between the creditor and the consumer. An agency may not conduct or sponsor, and an organization is not required to respond to, an information collection unless it displays a currently valid OMB control number. The OMB control number for the Recordkeeping and Disclosure Requirements in Connection with Regulation Z is 7100–0199.

List of Subjects in 12 CFR Part 226

Advertising, Federal Reserve System, Mortgages, Reporting and recordkeeping requirements, Truth in lending.

Text of Proposed Revisions

Certain conventions have been used to highlight the proposed changes to Regulation Z. New language is shown inside bold-faced arrows, while language that would be removed is set off with brackets.

For the reasons set forth in the preamble, the Board proposes to amend 12 CFR part 226 as follows:

PART 226—TRUTH IN LENDING (REGULATION Z)

1. The authority citation for part 226 continues to read as follows:

Authority: 12 U.S.C. 3806; 15 U.S.C. 1604 and 1637(c)(5).

2. Section 226.2 would be amended by adding a new paragraph (a)(27) to read as follows:

§ 226.2 Definitions and rules of construction.

(a) *Definitions.* * * *

(27) *Electronic communication* means a message transmitted electronically between a consumer and a creditor in a format that allows visual text to be displayed on equipment such as a personal computer monitor.

* * * * *

►3. Section 226.5 would be amended by adding a new paragraph (a)(5) as follows:◄

§ 226.5 General disclosure requirements.

(a) *Form of disclosures.* * * *

►(5) *Electronic communication.* A creditor and a consumer may agree to send by electronic communication, as that term is defined in § 226.2(a)(27), any information required by this subpart to be provided in writing. Information sent by electronic communication to a consumer must comply with paragraph (a)(1) of this section and any applicable timing requirements contained in this subpart.◄

4. Section 226.17 would be amended as follows:

a. By adding a new paragraph (a)(3); and

b. By revising paragraph (g) introductory text.

The revision and addition would read as follows:

§ 226.17 General disclosure requirements.

(a) *Form of disclosures.* * * *

►(3) *Electronic communication.* A creditor and a consumer may agree to send by electronic communication, as that term is defined in § 226.2(a)(27), any information required by this subpart to be provided in writing. Information sent by electronic communication to a consumer must comply with paragraph (a)(1) of this section and any applicable timing requirements contained in this subpart.◄

* * * * *

(g) *Mail or telephone orders—delay in disclosures.* If a creditor receives a purchase order or a request for an extension of credit by mail, telephone, or any other written [or electric] communication, ►excluding electronic communication as discussed in paragraph (a)(3) of this section,◄ without face-to-face or direct telephone solicitation, the creditor may delay the disclosures until the due date of the first payment, if the following information for representative amounts or ranges of credit is made available in written form to the consumer or to the public before the actual purchase order or request:

* * * * *

5. Section 226.31 would be amended by redesignating paragraph (b) as paragraph (b)(1) and adding a new paragraph (b)(2) as to read as follows:

§ 226.31 General rules.

* * * * *

(b)►(1)◄ *Form of disclosures.* * * *

►(2) *Electronic communication.* A creditor and a consumer may agree to send by electronic communication, as that term is defined in § 226.2(a)(27), any information required by this subpart to be provided in writing. Information sent by electronic communication to a consumer must comply with this paragraph (b) and any applicable timing requirements contained in this subpart.◄

* * * * *

By order of the Board of Governors of the Federal Reserve System, March 12, 1998.

William W. Wiles,

Secretary of the Board.

[FR Doc. 98–6991 Filed 3–24–98; 8:45 am]

BILLING CODE 6210–01–P

FEDERAL RESERVE SYSTEM

12 CFR Part 202

[Regulation B; Docket No. R–1006]

Equal Credit Opportunity

AGENCY: Board of Governors of the Federal Reserve System.

ACTION: Proposed rule.

SUMMARY: The Board is publishing for comment a proposed rule amending Regulation B, which implements the Equal Credit Opportunity Act. The proposal would permit creditors to use electronic communication (for example, communication via personal computer and modem) to provide disclosures required by the act and regulation if the consumer agrees to such delivery.

DATES: Comments must be received by May 15, 1998.

ADDRESSES: Comments should refer to Docket No. R–1006, and may be mailed to William W. Wiles, Secretary, Board of Governors of the Federal Reserve System, 20th Street and Constitution Avenue, N.W., Washington, DC 20551. Comments also may be delivered to Room B–2222 of the Eccles Building between 8:45 a.m. and 5:15 p.m. weekdays, or to the guard station in the Eccles Building courtyard on 20th Street, N.W. (between Constitution Avenue and C Street) at any time. Comments may be inspected in Room MP–500 of the Martin Building between 9:00 a.m. and 5:00 p.m. weekdays, except as provided in 12 CFR 261.12 of the Board's Rules Regarding Availability of Information.

FOR FURTHER INFORMATION CONTACT: Michael Hentrel or Natalie E. Taylor, Staff Attorneys, Division of Consumer and Community Affairs, at (202) 452–3667 or (202) 452–2412. For the hearing impaired only, Telecommunications Device for the Deaf (TDD), contact Diane Jenkins, at (202) 452–3544.

SUPPLEMENTARY INFORMATION:

I. Background

The Equal Credit Opportunity Act (ECOA) (15 U.S.C. 1691 *et seq.*) makes it unlawful for creditors to discriminate in any aspect of a credit transaction on the basis of sex, race, color, religion, national origin, marital status, age (provided the applicant has the capacity

to contract), because all or part of an applicant's income derives from public assistance, or because an applicant has in good faith exercised any right under the Consumer Credit Protection Act. The act is implemented by the Board's Regulation B (12 CFR part 202).

As part of the Regulatory Planning and Review Program and its review of regulations under section 303 of the Riegle Community Development and Regulatory Improvement Act of 1994 (12 U.S.C. 4803), the Board determined that the use of electronic communication for delivery of information to consumers that is required by federal consumer financial services and fair lending laws could effectively reduce regulatory compliance burden without adversely affecting consumer protections. Thus, the Board has been considering the issue and closely following the development of electronic communication. For example, in May 1996, the Board proposed to amend Regulation E (Electronic Fund Transfers) to permit disclosures to be provided electronically. In March 1997, the Board issued an amendment to the staff commentary to Regulation CC (Availability of Funds and Collection of Checks) that allowed financial institutions to send notices electronically. (62 FR 13801, March 18, 1997.)

Having considered comments received on the Regulation E proposal and other rulemakings, the Board now proposes to amend Regulation B to allow creditors to provide Regulation B disclosures electronically; such disclosures would remain subject to any applicable timing, format, and other requirements of the act and the regulation. Concurrently, the Board is issuing similar proposed revisions to address electronic communication under Regulations DD (Truth in Savings), Z (Truth in Lending), and M (Consumer Leasing), published elsewhere in today's **Federal Register**. In addition, the Board has issued an interim rule under Regulation E also published elsewhere in today's **Federal Register** so that financial institutions can implement systems to provide Electronic Fund Transfer Act disclosures electronically.

II. Proposed Regulatory Revisions

The ECOA and Regulation B require certain disclosures to be provided to applicants in writing. Under Regulation B, the regulatory requirement that disclosures be in writing has been presumed to require that creditors provide paper documents. Under many laws that call for information to be in writing, information in electronic form is considered to be ''written.'' Information produced, stored, or communicated by computer is also generally considered to be a writing at least where visual text is involved.

Therefore, pursuant to its authority under section 703(a)(1) of the ECOA, the Board proposes to amend Regulation B to permit creditors to use electronic communication where the regulation calls for information to be provided in writing. The term ''electronic communication'' is limited to a communication that can be displayed as visual text. An example is an electronic visual text message that is displayed on a screen (such as the consumer's computer monitor). Communications by telephone voicemail systems do not meet the definition of ''electronic communication'' for purposes of this regulation because they do not have the feature generally associated with a writing—visual text.

Section 202.5 Rules Concerning Taking of Applications

A new subsection (f) would be added to § 202.5 to address electronic communication. ''Electronic communication'' is a visual text message electronically transmitted between a creditor and an applicant's home computer or other electronic device used by an applicant. (Under the ECOA and Regulation B, the term ''applicant'' includes any person who requests or who has received and extension of credit from a creditor, and any person who is or may become contractually liable regarding an extension of credit. In this notice, the term is used in this context.)

Agreements Between Financial Institutions and Consumers

Section 202.5(f) would permit creditors to send electronic disclosures if the consumer agrees. There may be various ways that a creditor and an applicant agree to the electronic delivery of disclosures and other information. Whether such an agreement exists between the parties would be determined by applicable state law. The regulation would not preclude a creditor and an applicant from entering into an agreement electronically, nor does it prescribe a formal mechanism for doing so. The Board does believe, however, that consumers should be clearly informed when they are consenting to the delivery of ECOA and Regulation B disclosures and other information electronically.

Delivery Requirements for Electronic Communication

Regulation B requires that a creditor ''provide,'' ''give,'' ''deliver,'' or ''mail'' information to an applicant, or ''notify'' an applicant of certain information. Generally, the delivery requirement anticipates that a creditor will deliver the information—typically by mail—to an address designated by the applicant. For a paper communication, a creditor would not satisfy that requirement by making disclosures ''available'' to applicants, for example, at a creditor's office or other location. The Board believes that consumers receiving disclosures by electronic communication should have protections regarding delivery similar to those afforded consumers receiving disclosures in paper form. Simply posting information to an Internet site, however, without some appropriate notice and instructions about how the applicant may obtain the required information would not satisfy the requirement.

As a practical matter, there may be little distinction between sending or delivering electronic disclosures and making them ''available.'' Creditors would have flexibility in how they may deliver electronic disclosures to applicants, including, but not limited to the following examples. They may send disclosures to a consumer-designated electronic mail address or they may designate a location on a website where the applicant enters a personal identification number or other identifier to access required information. Assume that an applicant applies for a credit plan and agrees to receive all ECOA and Regulation B disclosures electronically. Subsequent disclosures, such as adverse action notices, sent (or delivered) to the designated address or placed at a designated location would generally satisfy the delivery requirements of the regulation.

Electronic communication would remain subject to any timing or other applicable requirements under Regulation B. For example, notice of action required by § 202.9(a)(1) of Regulation B must still be provided within thirty days after receiving a completed application. The Board solicits comment on whether further guidance is needed on how to comply with the timing requirements when a notice is posted on an Internet website.

Requirement That Information be ''Clear and Conspicuous''

Currently, Regulation B does not expressly require creditors to present required information in a clear and

conspicuous format. On the other hand, Regulations CC (Availability of Funds), DD (Truth in Savings), E (Electronic Fund Transfers), M (Consumer Leasing), and Z (Truth in Lending) all require that information be provided in a clear and conspicuous (or readily understandable) format. Accordingly, the Board believes it may be desirable to apply this same standard to information provided by electronic communication under Regulation B to ensure that information is understandable. The Board requests comment on whether Regulation B should be amended to apply this requirement to disclosures provided electronically.

Applicant's Ability to Retain Disclosures

Currently, only the notice in § 202.9(a)(3)(i)(B) of Regulation B need be provided in a form the applicant may retain. As in the case of the clear and conspicuous requirement discussed above, Regulations CC (Availability of Funds), DD (Truth in Savings), E (Electronic Fund Transfers), M (Consumer Leasing), and Z (Truth in Lending) all require that information be provided in a form that the consumer may keep. Because the retention requirement for written disclosures (including electronic communication) exists for those regulations, it seems appropriate to apply a comparable standard to Regulation B. The Board requests comment on whether this retention requirement should be extended to electronic communication under Regulation B.

Creditors would satisfy the retention requirement if, for example, disclosures can be printed or downloaded by the applicant. Thus, creditors would not be required to monitor an individual applicant's ability to retain the information, nor to take steps to find out whether the applicant has in fact retained it. The Board anticipates that, where appropriate, a creditor would inform the applicant of special technical specifications for receiving or retaining information before or at the time an applicant agrees to receive information electronically.

However, in circumstances where the creditor (or a network in which the creditor is a member) controls the equipment to be used for the service—such as terminals in institution lobbies or kiosks in public or other places—the creditor would have the responsibility of ensuring retainability. Provided that the delivery requirements (discussed above) are satisfied, methods for fulfilling this requirement could include, for example, printers incorporated into terminals or a screen message offering to transmit the disclosure to the applicant's electronic mail or post office address.

Consumer Requests for Information

Under Regulation B, applicants are entitled to receive certain information upon written request. For example, § 202.5a requires a creditor to provide—either automatically or upon the applicant's written request—a copy of the appraisal report used in connection with an application for a loan secured by a lien on a dwelling. Where the creditor provides appraisal reports only upon request, the creditor must notify the applicant of the right to request an appraisal and whether the applicant's request must be in writing. Section 202.9(a)(3)(ii) allows a creditor to disclose orally a business applicant's right to a statement of specific reasons for adverse action; however, the creditor must provide the reasons in writing within a specified time period after receiving the applicant's written request for the reasons. The proposed rule would permit all consumer requests required to be in writing to be sent electronically.

Current Need for Safeguards Concerning the Electronic Delivery of Disclosures

Today, most consumers receive federal disclosures in paper form. As electronic commerce and electronic banking increase and technological advances take place, obtaining disclosures by electronic communication will likely become more commonplace. Currently, however, the use of electronic communication in the delivery of financial services is still evolving. Thus, it is difficult to fully predict the extent to which additional safeguards, if any, may be needed to ensure that consumers receive the same protections that exist for disclosures in paper form. The Board expects that creditors subject to Regulation B will provide sufficient details about the delivery of disclosures. The Board plans to closely monitor the development of electronic delivery of disclosures and other information, and will address compliance or other issues that may arise as appropriate.

III. Form of Comment Letters

Comment letters should refer to Docket No. R–1006 and, when possible, should use a standard typeface with a type size of 10 or 12 characters per inch. This will enable the Board to convert the text to machine-readable form through electronic scanning, and will facilitate automated retrieval of comments for review. Also, if accompanied by an original document in paper form, comments may be submitted on 3½ inch or 5¼ inch computer diskettes in any IBM-compatible DOS-based format.

IV. Regulatory Flexibility Analysis

In accordance with section 3(a) of the Regulatory Flexibility Act, the Board's Office of the Secretary has reviewed the proposed amendments to Regulation B. Overall, the proposed amendments are not expected to have any significant impact on small entities. The proposed rule would relieve compliance burden by giving creditors flexibility in providing disclosures. A final regulatory flexibility analysis will be conducted after consideration of comments received during the public comment period.

V. Paperwork Reduction Act

In accordance with section 3506 of the Paperwork Reduction Act of 1995 (44 U.S.C. Ch. 35; 5 CFR part 1320 Appendix A.1), the Board reviewed the proposed revisions under the authority delegated to the Board by the Office of Management and Budget.

The Federal Reserve has no data with which to estimate the burden the proposed revised requirements would impose on state member banks. Creditors would be able to use electronic communication to provide disclosures and other information required by this regulation rather than having to print and mail the information in paper form. The use of electronic communication in home banking and financial services may reduce the paperwork burden on creditors and financial institutions or merely may reduce the dollar cost.

The Federal Reserve requests comments from creditors, especially state member banks, that will help to estimate the number and burden of the various disclosures that would be made in the first year this rule is effective. Comments are invited on: (a) Whether the proposed revised collection of information is necessary for the proper performance of the Federal Reserve's functions; including whether the information has practical utility; (b) the accuracy of the Federal Reserve's estimate of the burden of the proposed revised information collection, including the cost of compliance; (c) ways to enhance the quality, utility, and clarity of the information to be collected; and (d) ways to minimize the burden of information collection on respondents, including through the use of automated collection techniques or other forms of information technology. Comments on the collection of information should be sent to the Office of Management and Budget, Paperwork

Reduction Project (7100–0201), Washington, DC 20503, with copies of such comments to be sent to Mary M. McLaughlin, Chief, Financial Reports Section, Division of Research and Statistics, Mail Stop 97, Board of Governors of the Federal Reserve System, Washington, DC 20551.

The collection of information requirements in this proposed regulation are found in 12 CFR 202.5, 202.9, 202.12, 202.13, and Appendices B and C. This information is mandatory (15 U.S.C. 1691b(a)(1) and Public Law 104–208, § 2302(a)) to ensure that credit is made available to all creditworthy customers without discrimination on the basis of race, color, religion, national origin, sex, marital status, age (provided the applicant has the capacity to contract), receipt of public assistance, or the fact that the applicant has in good faith exercised any right under the Consumer Credit Protection Act (15 U.S.C. 1600 *et. seq.*). The respondents/recordkeepers are for-profit financial institutions, including small businesses. Creditors are required to retain records for twelve to twenty-five months as evidence of compliance.

The Board also proposes to extend the Recordkeeping and Disclosure Requirements in Connection with Regulation B (OMB No. 7100–0201) for three years. The current estimated total annual burden for this information collection is 125,177 hours, as shown in the table below. These amounts reflect the burden estimate of the Federal Reserve System for the 996 state member banks under its supervision. This regulation applies to all types of creditors, not just state member banks. However, under Paperwork Reduction Act regulations, the Federal Reserve accounts for the burden of the paperwork associated with the regulation only for state member banks. Other agencies account for the paperwork burden for the institutions they supervise.

	Number of respondents	Estimated annual frequency	Estimated response time	Estimated annual burden hours
Notification	996	1,715	2.50 minutes	71,173
Credit history reporting	996	850	2.00 minutes	28,220
Monitoring	996	360	.50 minute	2,988
Appraisal:				
Appraisal report upon request	996	190	5.00 minutes	15,770
Notice of right to appraisal	996	1,650	.25 minute	6,848
Self-testing:				
Recordkeeping of test	45	1	2 hours	90
Recordkeeping of corrective action	11	1	8 hours	88
Total				125,177

Since the Federal Reserve does not collect any information, no issue of confidentiality normally arises. However, the information may be protected from disclosure under the exemptions (b)(4), (6), and (8) of the Freedom of Information Act (5 U.S.C. 522 (b)). The adverse action disclosure is confidential between the institution and the consumer involved.

An agency may not conduct or sponsor, and an organization is not required to respond to, an information collection unless it displays a currently valid OMB control number. The OMB control number for the Recordkeeping and Disclosure Requirements in Connection with Regulation B is 7100–0201.

List of Subjects in 12 CFR Part 202

Aged, Banks, banking, Civil rights, Credit, Federal Reserve System, Marital status discrimination, Penalties, Religious discrimination, Reporting and recordkeeping requirements, Sex discrimination.

Text of Proposed Revisions

Certain conventions have been used to highlight the proposed changes to Regulation B. New language is shown inside bold-faced arrows.

For the reasons set forth in the preamble, the Board proposes to amend 12 CFR part 202 as set forth below:

PART 202—EQUAL CREDIT OPPORTUNITY (REGULATION B)

1. The authority citation for part 202 continues to read as follows:

Authority: 15 U.S.C. 1691–1691f.

2. Section 202.5 would be amended by adding a new paragraph (f) to read as follows:

§ 202.5 Rules concerning taking of applications.

* * * * *

►(f) *Electronic communication* means a message transmitted electronically between an applicant and a creditor in a format that allows visual text to be displayed on equipment such as a personal computer monitor. A creditor and an applicant may agree to send by electronic communication any information required by §§ 202.5a, 202.9, or 202.13(b), in accordance with applicable timing requirements. Disclosures provided by electronic communication shall be clear and conspicuous and in a form that the applicant may keep.◄

By order of the Board of Governors of the Federal Reserve System, March 12, 1998.

William W. Wiles,

Secretary of the Board.

[FR Doc. 98–6992 Filed 3–24–98; 8:45 am]

BILLING CODE 6210–01–P

FEDERAL RESERVE SYSTEM

12 CFR Part 205

[Regulation E; Docket No. R–1007]

Electronic Fund Transfers

AGENCY: Board of Governors of the Federal Reserve System.

ACTION: Proposed rule; technical amendments.

SUMMARY: The Board is publishing for comment a proposed rule to eliminate the extended time periods in Regulation E for investigating claims involving point-of-sale (POS) debit card and foreign-initiated transactions. Regulation E implements the Electronic Fund Transfer Act. Financial institutions generally have up to 10 business days to provisionally credit an account and up to 45 calendar days to complete an investigation of an alleged error. For POS and foreign transactions, financial institutions have up to 20 business days under the regulation to

provisionally credit an account and up to 90 calendar days to complete the investigation of an alleged error. The Board believes that technological improvements in payment systems should permit consumer claims of error to be investigated more quickly than in the past, and proposes to amend the regulation accordingly. The proposed rule also contains a technical amendment to a model form to harmonize it with the regulation.

DATES: Comments must be received on or before May 15, 1998.

ADDRESSES: Comments should refer to Docket No. R–1007, and may be mailed to William W. Wiles, Secretary, Board of Governors of the Federal Reserve System, 20th Street and Constitution Avenue, N.W., Washington, DC 20551. Comments also may be delivered to Room B–2222 of the Eccles Building between 8:45 a.m. and 5:15 p.m. weekdays, or to the guard station in the Eccles Building Courtyard on 20th Street, N.W. (between Constitution Avenue and C Street) at any time. Except as provided in the Board's Rules Regarding Availability of Information (12 CFR 261.12), comments will be available for inspection and copying by members of the public in the Freedom of Information Office, Room MP–500 of the Martin Building, between 9:00 a.m. and 5:00 p.m. weekdays.

FOR FURTHER INFORMATION CONTACT: Obrea O. Poindexter, Staff Attorney, or John C. Wood, Senior Attorney, Division of Consumer and Community Affairs, Board of Governors of the Federal Reserve System, at (202) 452–2412 or (202) 452–3667. For users of Telecommunications Device for the Deaf (TDD) only, contact Diane Jenkins at (202) 452–3544.

SUPPLEMENTARY INFORMATION:

I. Background

The Electronic Fund Transfer Act (EFTA), 15 U.S.C. 1693 *et seq.*, enacted in 1978, provides a basic framework establishing the rights, liabilities, and responsibilities of participants in electronic fund transfer (EFT) systems. The Board's Regulation E (12 CFR Part 205) implements the act. Types of transfers covered by the act and regulation include transfers initiated through an automated teller machine (ATM), point-of-sale (POS) terminal, automated clearinghouse, telephone bill-payment system, or home banking program. The rules prescribe restrictions on the unsolicited issuance of ATM cards and other access devices; disclosure of terms and conditions of an EFT service; documentation of EFTs by means of terminal receipts and periodic account statements; limitations on consumer liability for unauthorized transfers; procedures for error resolution; and certain rights related to preauthorized EFTs.

II. Proposed Regulatory Revisions

Error Resolution—POS Transactions

The EFTA requires a financial institution to investigate and resolve a consumer's claim of error—for an unauthorized EFT, for example—within specified time limits. Within 10 business days after receiving notice of an alleged error an institution must either resolve the claim or provisionally credit the consumer's account while continuing to investigate. In the latter case, the institution must resolve the claim no later than 45 calendar days after receiving notice.

For POS and foreign transactions, Regulation E provides longer time periods; it allows 20 business days to resolve a claim of an error (or to provisionally credit an account if the investigation takes longer), and 90 calendar days to complete the investigation. The rule allows issuers to avoid having to provisionally credit an account before the investigation is complete. The longer periods were adopted by the Board in 1982 for foreign transactions; and were adopted in 1984 for POS transactions, along with amendments to Regulation E to cover paper-based debit card transactions. Initially, the Board proposed to have the longer time periods for resolving claims of error apply only to paper-based debit card transactions (at merchant locations) that did not involve electronic terminals. After public comment, the Board adopted a final rule that applied the extended time frames to all POS transactions. The adoption of a uniform rule avoided the complexity of having the timing rules depend on how the particular EFT was initiated, which would have been confusing to consumers and burdensome to institutions. Moreover, at that time only a small portion of the POS debit card transactions involved electronic terminals.

The use of electronic terminals for all types of POS debit card transactions is now commonplace. Debit card transactions using personal identification numbers (PINs) at grocery stores and other merchant locations (referred to as PIN-protected) have been the most common type of debit card transaction in the United States. In the past few years, however, there has been an increase in the use at POS terminals of debit cards that can be used without a PIN (commonly referred to as check cards). Besides making them available upon request, many institutions have automatically replaced their customers' existing PIN-protected cards with cards that can be used with a PIN or without a PIN depending on where the transaction takes place.

This development has raised concerns about the potentially greater consumer exposure to losses in the absence of PIN protection. On September 24, 1997, the Subcommittee on Financial Institutions and Consumer Credit of the House Committee on Banking and Financial Services held a hearing on two bills to amend the EFTA in connection with the use of check cards. The bills would limit consumer liability for check cards, restrict unsolicited issuance of the cards in substitution for PIN-protected cards, add disclosures, and require institutions to provisionally recredit accounts sooner while investigating claims of unauthorized use or other errors.

With regard to the investigation of claims of error, legislation was introduced that would require institutions to recredit a consumer's account within three business days of notice of the claim of error. An industry representative of a card association testified that standards were voluntarily being adopted to require member institutions to provisionally credit accounts involving the use of a check card within five business days.

The Board believes that technical improvements in the payment system should permit consumer claims involving POS transactions to be investigated more quickly for transactions at POS; the same may be true for foreign transactions as well. Testimony at the September 1997 congressional hearing supports that conclusion. The Board believes that, especially in the context of accounts that can be accessed without PIN protection (potentially increasing consumer exposure to losses), the importance of more prompt recrediting of consumers' funds pending investigation may outweigh the compliance burden, if any, associated with this change. Therefore, the Board proposes to eliminate the extended time periods for POS and foreign transactions. The Board solicits specific comment on whether removal of the special rule would impose an undue burden.

Error Resolution—New Accounts

In the course of the Board's review of Regulation E, financial institutions suggested a change in the error resolution requirements when a new account is involved. The problem arises when individuals open an account with

the intent to defraud. Such individuals may open an account, immediately withdraw all or a large portion of the funds through ARMS, and file a claim with the financial institution disputing the ATM transactions. Often they receive provisional credit because of the financial institution's inability to research the claim (such as by obtaining photographic evidence from a nonproprietary ATM) within ten business days of a claim. At that point, the individual immediately withdraws the funds that were provisionally credited and abandons the account. Institutions believed that having more time to investigate errors involving new accounts would enable them to limit their losses and control this type of fraud.

The Board proposed in May 1996 to amend Regulation E, pursuant to its section 904(c) authority to provide for adjustments and exceptions in the regulation, to extend the error-resolution time periods for new accounts. The proposal would have allowed 20 business days for resolving an error before an institution is required to provisionally credit, and an outside limit of 90 calendar days for resolving the claim. The Board solicited comment on the extensions of time, on the 30-day definition for new accounts, and on whether consumer protections relating to error resolution would be adversely affected.

Comments on the proposed rule, from financial institutions and trade associations, were generally favorable. However, in light of the proposed rule to reduce the time for resolving errors involving POS and foreign transactions, the Board is deferring final action until action is taken on the POS and foreign transaction proposal.

Technical Amendment to Error Resolution Notice

Regulation E requires financial institutions to investigate and resolve errors alleged by consumers, either within 10 business days after receiving the consumer's notice of error or within 45 calendar days after receiving the notice, provided the institution provisionally credits the consumer's account within 10 business days. Upon completion of the investigation, the institution must notify the consumer of its findings. Prior to the 1996 revision of Regulation E, the institution had an additional three days to notify the consumer only if the institution found that an error did not occur and was operating under the 45-day rule. If the institution found that an error did occur, the institution was required to notify the consumer no later than the tenth business day or the 45th calendar day, as applicable.

In the 1996 revision, the Board amended the error resolution procedures (§ 205.11) to allow institutions the three additional days to notify the consumer in all cases. However, the model error resolution notice (Appendix A, paragraph A–3) was not revised at that time to conform to the amendment to § 205.11. The text of the model notice is being amended to conform it to § 205.11 as amended.

III. Form of Comment Letters

Comment letters should refer to Docket No. R–1007. The Board requests that, when possible, comments be prepared using a standard typeface with a type size of 10 or 12 characters per inch. This will enable the Board to convert the text into machine-readable form through electronic scanning, and will facilitate automated retrieval of comments for review. Comments may also be submitted on computer diskettes, using either the 3.5″ or 5.25″ size, in any DOS-compatible format. Comments on computer diskettes must be accompanied by a paper version.

IV. Regulatory Flexibility Analysis

In accordance with section 3(a) of the Regulatory Flexibility Act, the Board's office of the Secretary has reviewed the proposed amendments to Regulation E. The Board believes that the proposal to shorten the time period for investigating errors alleged in point-of-sale debit card transactions will provide increased consumer protection without any increase in regulatory burden. The current exception to the statutory requirement of 10 business days for such investigations was implemented at a time when paper-based transactions were more common. The Board believes that such transactions are uncommon today, beyond the initial deposit of transaction information when depository institutions and third-party processors convert any paper-based information to electronic form. The Board specifically solicits comment on extent of any difficulty that this change might warrant.

V. Paperwork Reduction Act

In accordance with section 3506 of the Paperwork Reduction Act of 1995 (44 U.S.C. Ch. 35; 5 CFR part 1320 Appendix A.1), the Board reviewed the interim rule under the authority delegated to the Board by the Office of Management and Budget.

The Federal Reserve has no data with which to estimate the burden the proposed revised requirements would impose on state member banks. Issuers would be able to use electronic communication to provide disclosures and other information required by this regulation rather than having to print and mail the information in paper form. The use of electronic communication may reduce the paperwork burden of financial institutions or merely may reduce the dollar cost.

The Federal Reserve requests comments from issuers, especially state member banks, that will help to estimate the number and burden of the various disclosures that would be made in the first year this interim regulation is effective. Comments are invited on: (a) Whether the proposed revised collection of information is necessary for the proper performance of the Federal Reserve's functions; including whether the information has practical utility; (b) the accuracy of the Federal Reserve's estimate of the burden of the proposed revised information collection, including the cost of compliance; (c) ways to enhance the quality, utility, and clarity of the information to be collected; and (d) ways to minimize the burden of information collection on respondents, including through the use of automated collection techniques or other forms of information technology. Comments on the collection of information should be sent to the Office of Management and Budget, Paperwork Reduction Project (7100–0200), Washington, DC 20503, with copies of such comments sent to Mary M. McLaughlin, Chief, Financial Reports Section, Division of Research and Statistics, Mail Stop 97, Board of Governors of the Federal Reserve System, Washington, DC 20551.

The collection of information requirements in this interim regulation are found throughout 12 CFR Part 205 and in Appendix A. This information is mandatory (15 U.S.C. 1693 *et seq.*) to ensure adequate disclosure of basic terms, costs, and rights relating to electronic fund transfer (EFT) services provided to consumers. The respondents/recordkeepers are for-profit financial institutions, including small businesses. Institutions are also required to retain records for 24 months as evidence of compliance.

The Board also proposes to extend the Recordkeeping and Disclosure Requirements in Connection with Regulation E (OMB No. 7100–0200) for three years. The current estimated total annual burden for this information collection is 462,839 hours, as shown in the table below. These amounts reflect the burden estimate of the Federal Reserve System for the 851 state member banks estimated to be covered by Regulation E. This regulation applies

to all types of issuers, not just state member banks. However, under Paperwork Reduction Act regulations, the Federal Reserve accounts for the burden of the paperwork associated with the regulation only for state member banks. Other agencies account for the paperwork burden for the institutions they supervise.

	Number of respondents	Estimated annual frequency	Estimated response time	Estimated annual burden hours
Initial Disclosures:				
Initial terms	851	250	2.50 minutes	8,865
Change in terms	851	340	1.00 minute	4,822
Transaction disclosures:				
Terminal receipts	851	71,990	0.25 minute	255,265
Deposit verifications	851	420	1.50 minutes	8,936
Periodic disclosures	851	12,800	1.00 minute	181,547
Error resolution rules	851	8	30.00 minutes	3,404
Total				462,839

Since the Federal Reserve does not collect any information, no issue of confidentiality normally arises. However, the information may be protected from disclosure under the exemptions (b)(4), (6), and (8) of the Freedom of Information Act (5 U.S.C. 522(b)). The disclosures and information about error allegations are confidential between the institution and the consumer. An agency may not conduct or sponsor, and an organization is not required to respond to, an information collection unless it displays a currently valid OMB control number. The OMB control number for the Recordkeeping and Disclosure Requirements in Connection with Regulation E is 7100–0200.

List of Subjects in 12 CFR Part 205

Consumer protection, Electronic fund transfers, Federal Reserve System, Reporting and recordkeeping requirements.

Text of Proposed Revisions

Certain conventions have been used to highlight the proposed changes to Regulation E. New language is shown inside bold-faced arrows, while language that would be removed is set off with brackets.

Pursuant to the authority granted in sections 904 (a) and (c) of the Electronic Fund Transfer Act, 15 U.S.C. 1693b (a) and (c), and for the reasons set forth in the preamble, the Board proposes to amend Regulation E, 12 CFR part 205, as set forth below:

PART 205—ELECTRONIC FUND TRANSFERS (REGULATION E)

1. The authority citation for part 205 continues to read as follows:

Authority: 15 U.S.C. 1693–1693r.

§205.11 [Amended]

2. Section 205.11 would be amended by removing paragraph (c)(3) and redesignating paragraph (c)(4) as paragraph (c)(3).

3. In Appendix A to Part 205, in A–3 MODEL FORMS FOR ERROR RESOLUTION NOTICE (§§ 205.7(b)(10) and 205.8(b)), the undesignated second and third paragraphs following paragraph (a)(3) would be revised to read as follows:

Appendix A to Part 205—Model Disclosure Clauses and Forms

* * * * *

A–3—MODEL FORMS FOR ERROR RESOLUTION NOTICE (§§ 205.7(b)(10) AND 205.8(b))

(a) *Initial and annual error resolution notice (§§ 205.7(b)(10) and 205.8(b))*

* * * * *

We will ►determine whether an error occurred◄ [tell you the results of our investigation] within 10 business days after we hear from you and will correct any error promptly. If we need more time, however, we may take up to 45 days to investigate your complaint or question. If we decide to do this, we will credit your account within 10 business days for the amount you think is in error, so that you will have the use of the money during the time it takes us to complete our investigation. If we ask you to put your complaint or question in writing and we do not receive it within 10 business days, we may not credit your account.

►We will tell you the results of our investigation within three business days after completing it.◄ If we decide that there was no error, ►this will include◄ [we will send you] a written explanation [within three business days after we finish our investigation]. You may ask for copies of the documents that we used in our investigation.

* * * * *

By order of the Board of Governors of the Federal Reserve System, March 12, 1998.

William W. Wiles,

Secretary of the Board.

[FR Doc. 98–6993 Filed 3–24–98; 8:45 am]

BILLING CODE 6210–01–P

federal register

Wednesday
March 25, 1998

Part IV

Department of Transportation

49 CFR Part 37

Architectural and Transportation Barriers Compliance Board

36 CFR Part 1192

Transportation for Individuals with Disabilities; Proposed Rule

Americans with Disabilities Act Accessibility Guidelines for Transportation Vehicles; Over-the-Road Busses; Proposed Rule

DEPARTMENT OF TRANSPORTATION

49 CFR Part 37

[Docket OST–1998–3648; Notice No. 98–15]

RIN 2105–ACOO

Transportation for Individuals with Disabilities

AGENCY: Department of Transportation, Office of the Secretary.

ACTION: Notice of proposed rulemaking (NPRM).

SUMMARY: The Department is proposing regulations to require the accessibility of new over-the-road buses (OTRBs) and to require accessible OTRB service. The proposed rules, under the authority of the Americans with Disabilities Act (ADA), apply both to intercity and other fixed-route bus operators and to charter/tour operators. The rules would ensure that passengers with disabilities could use OTRBs, which are the last major mode of surface transportation that are not subject to final accessibility requirements.

DATES: Comments are requested on or before May 26, 1998. Late-filed comments will be considered to the extent practicable.

ADDRESSES: Comments should be sent, preferably in triplicate, to Docket Clerk, Docket No. OST–1998–3648, Department of Transportation, 400 7th Street, S.W., Room PL–401, Washington, D.C., 20590. Comments will be available for inspection at this address from 10:00 a.m. to 5:00 p.m., Monday through Friday. Commenters who wish the receipt of their comments to be acknowledged should include a stamped, self-addressed postcard with their comments. The Docket Clerk will date-stamp the postcard and mail it back to the commenter.

FOR FURTHER INFORMATION CONTACT: Robert C. Ashby, Deputy Assistant General Counsel for Regulation and Enforcement, Department of Transportation, 400 7th Street, S.W., Room 10424, Washington, D.C., 20590. (202) 366–9306 (voice); (202) 755–7687 (TDD), or Donald Trilling, Director, Office of Environment, Energy, and Safety, same street address, Room 9222, (202) 366–4220.

SUPPLEMENTARY INFORMATION: For purposes of the Americans with Disabilities Act (ADA), an OTRB is ''a bus characterized by an elevated passenger deck located over a baggage compartment'' (section 301(5)). The Department's ADA regulation (49 CFR 37.3) repeats this definition without change. OTRBs are a familiar type of bus used by Greyhound and other fixed-route intercity bus carriers as well as charter and tour operators.

As provided by the ADA, the Department issued limited interim OTRB regulations with its 1991 final ADA rules. The statute originally provided for the Department to issue final regulations by mid-1994, which would go into effect in July 1996 for larger operators and July 1997 for smaller operators. The Department fell behind the statutory schedule. In recognition of this fact, Congress amended the ADA in 1995 to put the final rules into effect two years from the date of their issuance (three years for small entities). The Secretary of Transportation has made issuance of final OTRB rules a priority, and the Department has established a schedule calling for publication of a final rule by September 15, 1998. On this schedule, the rules would begin to apply to larger entities in October 2000 and to smaller entities in October 2001.

Regulatory Activity

In October 1993, the Department issued an advance notice of proposed rulemaking (ANPRM) that asked a variety of questions about the scope of accessibility requirements, interim service requirements, operational and fleet composition issues, lavatories and rest stops, training, and economic issues concerning OTRBs. Also in the autumn of 1993, the Department convened a public meeting at which DOT staff discussed OTRB issues with representatives of the disability community and OTRB industry. On various occasions, former Secretary of Transportation Federico Peña, Secretary of Transportation Rodney Slater and other DOT officials have met with disability community and bus industry groups to discuss the issues involved.

It is clear from the responses to the ANPRM, the public meeting, and comments in meetings that the bus industry and disability community hold quite different views of the course the Department should follow in these regulations. The disability community believes that all new OTRBs should be accessible. The bus industry believes that a ''service-based'' approach, involving such elements as a small pool of accessible buses, alternate means of access (e.g., station-based lifts and scalamobils), and on-call service. In support of its position, the disability community cites the accessibility requirements of other transportation provisions of the ADA, which uniformly require new vehicles to be accessible, and gaps and inequalities in service that they believe the industry approach would create. In support of its position, the industry cites the higher costs of purchasing and operating accessible vehicles, their projections that demand for accessible service would be low, the economic problems of the intercity bus industry, and their view that their approach is more cost-effective.

Studies

There are two principal studies of over-the-road bus accessibility that the Department has considered in preparing this NPRM. The first was a Congressionally-mandated study prepared in 1993 by the Office of Technology Assessment (OTA), a small Federal agency (Access to Over-the—road Buses for Persons with Disabilities, U.S. Congress, Office of Technology Assessment, OTA–SET–547 (Washington, D.C., U.S. Government Printing Office, May 1993)). The second was prepared for Greyhound by Nathan Associates, a consulting firm.

On potential ridership, the OTA study presents (admittedly crude) estimates that, if OTRB trip rates for disabled passengers are about the same as for the general passenger population, there would be 180,000 annual trips on fixed-route OTRB service by wheelchairs (plus another 200,000 by people using other mobility aids). Greyhound, using the experience of limited accessible OTRB operations in Massachusetts, Colorado, and Ontario, projects an annual demand of 13,600 trips for wheelchair passengers for Greyhound.

The OTA study takes the view that transferring a wheelchair user out of his or her own wheelchair has safety and effectiveness problems, and therefore concludes that, to meet the requirements of the ADA, boarding assistance options must allow an individual to remain in his or her own wheelchair. This could include not only lift-equipped buses, but also station-based or portable lifts in combination with a door and securement location for an individual's wheelchair. The Greyhound study takes the position that, in addition to 75-bus pool of accessible buses, the use of boarding assistance methods that involve transfers from wheelchair to boarding device to vehicle seat (e.g., scalamobils or station-based lifts in combination with boarding chairs) would provide acceptable access for mobility-impaired passengers.

The ADA does not authorize the Department to require accessible restrooms on buses if doing so will result in the loss of seating capacity. All current accessible restroom units would result in a loss of seating capacity. The OTA study recognizes this fact, but

suggests that, in the absence of an accessible restroom, there must be a way for mobility-impaired passengers to use rest stops on a sufficiently frequent basis (OTA suggests every 1.5–2 hours). The Greyhound study finds that requiring accessible restrooms would more than double the costs of accessibility, compared to lift-equipped buses without accessible restrooms. The Greyhound study does not address the issue of rest stops, though previous industry comments have suggested that requiring additional rest stops could be costly and might disrupt schedules.

The OTA study focused on the costs and benefits of OTRB transportation alone. The Greyhound study also makes comparisons with other modes (e.g., intercity rail and air travel), in conjunction with Greyhound's argument that it should not have relatively higher costs than other modes in making its system accessible.

The foregoing discussion does not comprehensively summarize the two studies, but it does illustrate the very different views of OTRB accessibility, and its costs and benefits, that they take. The Department's regulatory evaluation discusses the issues addressed by these studies in greater detail.

Scope of the Department's Legal Discretion

Statutory Provisions

The Department's OTRB rulemaking implements several provisions of Title III of the Americans with Disabilities Act (ADA). Section 304(a) sets forth the general rule that—

> no individual shall be discriminated against on the basis of disability in the full and equal enjoyment of specified transportation services provided by a private entity that is primarily engaged in the business of transporting people and whose operations affect commerce.

Section 304(b)(1) lists four types of conduct that constitute discrimination in general for all entities covered by Section 304. The first, in § 304(b)(1) is—

> the imposition or application * * * of eligibility criteria that screen out or tend to screen out an individual with a disability or any class of individuals with disabilities from fully enjoying the specified public transportation services provided by the entity, unless such criteria can be shown to be necessary for the provision of the services being offered.

Section 304(b)(2) adds the following to the list of actions the failure to do which constitutes discrimination:

> (A) mak[ing] reasonable modifications consistent with those required under section 302(b)(2)(A)(ii): [1]
>
> (B) Provid[ing] auxiliary aids and services consistent with the requirements of section 302(b)(2)(A)(iii); [2] and
>
> (C) remov[ing] barriers consistent with the requirements of section 302(b)(2)(A) [3] and with the requirements of section 303(a)(2). [4]

Section 304(b)(3) begins the statute's specific treatment of vehicle accessibility requirements. It states that discrimination includes—

> the purchase or lease by such an entity of a new vehicle (other than * * * an over-the-road bus) * * * that is not readily accessible to and usable by individuals with disabilities, including individuals who use wheelchairs; except that the new vehicle need not be readily accessible to and usable by such individuals if the vehicle is used solely in a demand responsive system and the entity can demonstrate that the system, when viewed in its entirety, provides a level of service to such individuals equivalent to the level of service provided to the general public. (emphasis added).

As the underlined language indicates, the requirements of this paragraph do not cover OTRBs. Instead, Section 304(b)(4)(A) provides that discrimination includes ''the purchase or lease by such entity of an over-the-road bus which does not comply with the regulations issued under section 306(a)(2); and * * * any other failure of such entity to comply with such regulations * * *.''

Section 306(a)(2)(A) required the Department to issue interim regulations concerning over-the-road bus service. These rules, which the Department published as 49 CFR 37.169 (56 FR 45640–41; September 6, 1991), had to require operators to ''provide accessibility to such bus'' for individuals with disabilities, except that structural changes to make buses wheelchair-accessible and the purchase of boarding assistance devices could not be required. The Department views this provision as prohibiting the interim rules from requiring lifts on buses or the acquisition of particular devices to provide accessibility for wheelchair users. The interim rules consequently required boarding assistance without specifying the means. The interim rules also require OTRB operators to provide on-board storage of passengers' wheelchairs.

Section 304(a)(2)(B) concerns the Department's ''final requirement,'' which is to be issued after the Department studies the interim regulations and the OTA study. Section 306)(a)(2)(B)(ii) directs the Department to

> issue new regulations * * * to carry out section 304(b)(4) and 302(b)(2)(D)(ii) [5] that require, taking into account the purposes of the study under section 305 and recommendations resulting from such study, each private entity which uses an over-the-road bus to provide accessibility to such bus to individuals with disabilities, including individuals who use wheelchairs.

This section provides that, not later than one year after the date of the OTA study, the Department must issue these final regulations. As noted above, the Department fell well behind this schedule. Originally, the ADA provided that the Department's final regulations would take effect

> with respect to small providers of transportation (as defined by the Secretary), 7 years after the date the enactment of this Act [i.e., July 26, 1997]; and * * * with respect to other providers of transportation, 6 years after such date of enactment [i.e., July 26, 1996]. (section 304(a)(2)(B)(iii)).

In recognition of the fact that the Department did not meet the statutory schedule for issuing the final rules, Congress amended section 306(a)(2)(B)(3)(iii) to put the final rules into effect two years from their effective date (three years for small entities).

The ADA provides that the Department's final rules may not require

---

[1] Discrimination includes ''a failure to make reasonable modifications in policies, practices, or procedures, when such modifications are necessary to afford goods services, facilities, privileges, advantages, or accommodations, unless the entity can demonstrate that making such modifications would fundamentally alter the nature of such goods, services, facilities, privileges, advantages or accommodations.''

[2] Discrimination includes ''a failure to take such steps as may be necessary to ensure that no individual with a disability is excluded, denied services, segregated, or otherwise treated differently than other individuals because of the absence of auxiliary aids and services, unless the entity can demonstrate that taking such steps would fundamentally alter the nature of the good, service, facility, privilege, advantage, or accommodation being offered or would result in an undue burden.''

[3] Discrimination includes ''a failure to remove architectural barriers, and communication barriers that are structural in nature, in existing facilities, and transportation barriers in existing vehicles* * *used by an establishment for transporting individuals (not including barriers that can be removed only through the retrofitting of vehicles* * *by the installation of a* * *lift), where such removal is readily achievable; and where an entity can demonstrate the removal of [such] a barrier* * *is not readily achievable, a failure to makes goods, services, privileges, advantages, or accommodations, available through alternative methods if such methods are readily achievable.''

[4] This section requires making alterations to existing facilities ''readily accessible to and usable by'' individuals with disabilities, to the maximum extent feasible.

[5] This section provides that discrimination includes, for private entities not primarily in the business of transporting people, ''the purchase or lease of an over-the-road-bus which does not comply with the regulations issued under section 306(a)(2) * * * and any other failure by such entity to comply with such regulations.''

''the installation of accessible restrooms in over-the-road buses if such installation would result if such installation would result in a loss of seating capacity.'' (section 304(a)(2)(C). To the best of the Department's knowledge, all existing accessible restroom units would result in the loss of seating capacity, so this provision effectively bars the Department from requiring accessible restrooms in buses.

The ADA specifies in some detail what the OTA study was intended to accomplish. Section 305(a) said that the OTA study was to determine—

(1) The access needs of individuals with disabilities to over-the road buses and to over-the-road bus service; and (2) the most cost-effective methods for providing access to over-the-road buses and over-the-road bus service, particularly for individuals who use wheelchairs, through all forms of boarding options.

Section 305(b) told OTA to analyze several factors:

(1) The anticipated demand by individuals with disabilities for accessible over-the-road buses and over-the-road bus service.

(2) The degree to which such buses and service, including any service required under sections 304(b)(2) and 306(a)(2), are readily accessible to and usable by individuals with disabilities.

(3) The effectiveness of various methods of providing accessibility to such buses and service to individuals with disabilities.

(4) The cost of providing accessible over-the-road buses and bus service to individuals with disabilities, including consideration of recent technological and cost-saving developments in equipment and devices.

(5) Possible design changes in over-the-road buses that could enhance accessibility, including the installation of accessible rest rooms which do not result in a loss of seating capacity.

(6) The impact of accessibility requirements on the continuation of over-the-road bus service, with particular consideration of the impact of such requirements on such service to rural communities.

Legislative History

The Senate and House versions of the bill that became the ADA contained similar, but somewhat different, provisions concerning OTRBs. The Senate bill provided that it was discrimination to purchase or lease a new OTRB ''that is not readily accessible to and usable by individuals with disabilities.'' (S. Rept. 101–116 at 73). This term meant ''able to be entered into and exited from safely and effectively used by individuals with disabilities, including individuals who use wheelchairs.'' (Id.) The Senate Committee on Labor and Human Resources then provided more specific guidance on what constituted a vehicle that was readily accessible and usable by individuals with disabilities:

Lifts, ramps, and fold-up seats or other wheelchair spaces with appropriate securement devices are among the current features necessary to make transit vehicles readily accessible to and usable by individuals with disabilities. The requirement that a vehicle is to be readily accessible obviously entails that each vehicle is to have some spaces for individuals who use wheelchairs or three-wheeled mobility aids; how many spaces are to be made available for wheelchairs is, however, a determination that depends on various factors, including the number of vehicles in the fleet, seat vacancy rates, and usage by people with disabilities * * * [C]onsistent with these general factors, the determination of how many spaces must be available should be flexible and generally left up to the provider; provided that at least some spaces on each vehicle are accessible. (Id. at 73–74)

Senator Hatch, in a separate statement of additional views, criticized the provision of the Senate bill requiring new OTRBs to be ''readily accessible to and usable by'' individuals with disabilities as imposing a requirement to purchase lift-equipped buses, which he said would impose overly onerous costs on the private bus industry. He believed that no such requirement should be imposed by Congress until the results of the OTA study were available. (Id. at 102–105.)

The House Committee on Public Works and Transportation began its discussion of OTRB requirements by addressing the relationship between the general nondiscrimination requirements of § 304 and the vehicle-specific requirements of the section:

The examples of discrimination contained in section 304(b) are intended to address situations that are not covered in the specific vehicle and system requirements * * * The general rule contained in paragraph (a) and the examples of discrimination contained in paragraph (b) are not intended to override the specific requirements contained in the sections referenced in the previous sentence. For example, an individual with a disability could not make a successful claim under section 304(a) that he or she had been discriminated against in the full and equal enjoyment of public transportation services on the grounds that an over-the-road bus was not wheelchair lift-equipped, if a lift was not required under 304(b) or 306(a)(2). (H. Rept. 101–485, Pt. 1, at 39)

Commenting on the regulations to be issued by DOT, the Committee added:

Section 304(b)(4) requires over-the-road buses to comply with the regulations issued under section 306(a)(2) and makes it discrimination to purchase or lease an over-the-road-bus which does not meet those requirements. Two sets of regulations will be issued by the Department of Transportation under section 306(a)(2) which include vehicle specific requirements for over-the-road buses. (Id. at 40.)

The first of these two regulations is the interim rule which the Department has already issued as 49 CFR 37.169. ''While these interim requirements are in effect,'' the Committee said, ''it will not be considered discrimination for a private entity to purchase or lease an over-the-road bus which is not wheelchair lift-equipped or to which a boarding chair/ramp is not provided to board such bus.'' (Id. at 43.) With respect to the second regulation, the Committee said the following:

Section 306(a)(2)(B) requires the Secretary of Transportation to review the OTA study and issue final regulations not later than one year after the submission of the study to the Secretary. The regulations shall require, taking into account the purposes of the study under section 305 and any recommendations resulting from such study, each private entity which uses an over-the-road bus to provide transportation to individuals to provide accessibility to such bus to individuals with disabilities. The regulations will be effective 7 years after date of enactment for small providers, as defined by the Secretary, and 6 years after date of enactment for other providers. The Secretary may define small providers using current ICC class definitions. The extra year for compliance for these providers acknowledges the increased burden that implementation of some accessibility requirements could have on operators with relatively small fleets. Section 306(a)(2)(C) states that no regulations may require the installation of accessible restrooms in over-the-road buses if such installation would result in a loss of seating capacity. The term ''seating capacity'' has the same meaning discussed under section 305—a reduction in the number of seats in which passengers can ride comfortably. (Id.)

Statements of additional views by Congressman Hammerschmidt and several colleagues, and Congressman Shuster and several colleagues, praised the House version of the OTRB language as representing a constructive compromise acceptable to all interested parties, including the disability community and the OTRB industry. (Id. at 60, 64–65.)

The Conference Committee report described the construction of the final version of these provisions the bill as follows:

The Senate bill specifies that over-the-road buses must be readily accessible and usable by individuals with disabilities within 7 years for small providers and 6 years for other providers * * * The House amendment deletes the specific obligation to make each bus ''readily accessible to and usable by'' individuals with disabilities at the end of the 6 or 7 year period * * * Instead, the House amendment specifies that the purchase of new over-the-road buses must be made in accordance with regulations issued

by the Secretary of Transportation * * *. The Senate recedes. (H. Rept. 101–596 at 79.)

The Congressional reports also discussed the purposes of the OTA study. The House Committee made the following statements:

Section 305(a) directs the Office of Technology Assessment (OTA) to conduct a study to determine (1) the access needs of individuals with disabilities to over-the-road bus service; and (2) the most-cost effective methods for providing access to over-the-road buses and over-the-road bus service to individuals with disabilities through all forms of boarding options. During its hearings on the legislation, the Committee heard conflicting testimony on the cost and reliability of wheelchair lifts or other boarding assistance devices with regard to their use on over-the-road buses. Therefore, before mandating these or any other boarding options in this Act, a thorough study of the access needs of individuals with disabilities to these buses and the cost-effectiveness of different methods of providing such access is required by the Act. Section 305(b) specifies which issues must be analyzed by the study, but is not intended to be all-inclusive. The analysis required by the legislation includes a review of accessibility issues relating to vehicle-specific aspects of over-the-road buses, as well as to system-wide aspects of over-the-road bus service. Both aspects of over-the-road bus accessibility are included so that neither is favored over the other in the organization of the study. (H. Rept. 101–485, Pt. q, at 40–41.)

With respect to different boarding assistance options, the Committee directed OTA to examine—

the effectiveness of various methods of providing accessibility to such buses and service to individuals with disabilities. All types of methods (including the use of boarding chairs, ramps, wheelchair lifts, and other boarding assistance devices) which may, or may not, involve the physical lifting of a boarding assistance device should be analyzed in terms of their effectiveness. (Id. at 41.)

Consistent with the Senate bill's provision requiring OTRBs to be ''readily accessible to and usable by'' individuals with disabilities, the Senate Committee's comments on the purposes of the study had a different emphasis than those of the House Committee:

Section 305 of the legislation directs the Architectural and Transportation Barriers Compliance Board to undertake a study to determine the access needs of individuals with disabilities to over-the road buses readily accessible to and usable by individuals with disabilities. In determining the most cost-effective methods for making over-the-road buses readily accessible to and usable by persons with disabilities, particularly individuals who use wheelchairs, the legislation specifies that the study should analyze the cost of providing accessibility, recent technological and cost saving developments in equipment and devices, and possible design changes. Thus, the Committee is interested in having the study include a review of current technology such as lifts that enable persons with mobility impairments, particularly those individuals who use wheelchairs, to get on and off buses without being carried; alternative designs to the current lifts; as well as alternative technologies and modifications to the design of buses that may be developed that will also enable such individuals to get on and off over-the-road buses without being carried. (S. Rept. 101–116 at 74.)

In the Conference Committee, as noted above, the Senate receded, and the House provision became part of the final bill. The Conference Committee report said that—

the purpose of the study is revised to include a determination of the access needs of individuals with disabilities, particularly individuals who use wheelchairs, through all forms of boarding options. The study must analyze, among other things, the effectiveness of various methods of providing access to such buses and service to individuals with disabilities. (H. Rept. 101–596 at 79.)

OTA Legal Analysis

In the study mandated by section 305 of the ADA, the OTA set forth a view of the OTRB requirements of the statute that leaves the Department relatively little regulatory discretion. OTA states that ''[s]ection 304(b)(4)(A) clarifies that the exclusion of OTRBs from 304(b)(3) is with respect to the compliance date and specific standards, not from the requirement for accessibility.'' (OTA study at 6.) Unlike situations in which the concept of ''undue burden'' applies, OTA asserts, ''transportation services must meet accessibility standards regardless of cost considerations.'' (Id.) Moreover, ''OTA could find no language in the ADA stating or implying that OTRBs can be held to a lesser standard than other modes of transportation, nor does the ADA give guidance on promulgating such a lesser standard.'' (Id.) The section 305 requirement for the OTA study is not ''an exemption or retreat from the policies and goals of the ADA,'' and section 306 requires that ''DOT's regulations must apply specified previous sections of the ADA to OTRBs and must require OTRB operators to provide accessible service.'' (Id. at 6–7.)

OTA defines an ''accessible OTRB'' as one having a level change mechanism (on-board or station-based) that allows individuals to remain in their wheelchairs, a sufficiently wide door to accommodate persons with mobility impairments, two wheelchair securement locations, a means to communicate with persons with sensory or cognitive disabilities, and provisions for the use of accessible restroom facilities. (Id. at 25.) OTA asserts that—

[f]or fixed-route transportation systems, the ADA requires private operators to install accessibility technologies when purchasing or leasing a vehicle. Eventually, *all* scheduled fixed-route service will use accessible vehicles. In the case of privately operated OTRBs, there is some debate about whether DOT has the latitude to promulgate regulations under a different, perhaps lesser, standard of accessibility. However, the OTA expects that the same standard of accessibility will be applied to all private operators of public transportation within the jurisdiction of the ADA * * *Therefore, OTA anticipates that ADA's standard of accessible service for fixed-route private operators of other public transportation systems extends to fixed route service using OTRBs. In other words, to meet the requirements of the ADA, all OTRBs leased or purchased for use in fixed route service must be accessible.*

Charter and tour services meet the definition of demand-responsive systems. For demand-responsive transportation systems (other than those using OTRBs or automobiles), the ADA has required each private operator * * *,[w]hen purchasing a new vehicle,* * * to purchase an accessible vehicle, unless the operator can show that the system, when viewed in its entirety, provides the same level of service to individuals with disabilities as to those without. *As with fixed-route service, OTA anticipates that the ADA's standard of accessibility for private operators of other demand-responsive transportation systems applies to demand-responsive services using OTRBs * * * In other words, to meet the requirements of the ADA, private operators of demand-responsive OTRB service must eventually have access to enough accessible OTRBs to meet the demand.* (Id. at 25–26, emphasis in original.)

OTA also takes the view that—

the ADA does not allow operators to provide accessible service through the use of alternative vehicles or through reservations systems used solely for persons with disabilities. For example, a tour operator could not provide accessible service with an accessible van that transports passengers with disabilities while the rest of the tour patrons ride in an OTRB. (Id. at 26.)

Views of Commenters to the DOT ANPRM

Bus industry commenters argued that DOT has considerable flexibility in fashioning OTRB requirements. For example, Greyhound argued that the ADA tells DOT to consider ''all forms of boarding options'' and the ''access needs of individuals,'' rather than binding DOT to a requirement for all new accessible buses. It also asserted that the portions of section 305 that direct OTA to study the economic consequences of accessibility requirements, the anticipated demand for accessible service, and the cost-

effectiveness of means of providing accessibility imply that DOT could rely on such factors to devise a requirement other than requiring all new buses to have lifts. Greyhound also pointed to the distinction between the section 306 requirement of ''accessibility to such bus'' and what it regards as the more stringent requirement, elsewhere in the ADA, for making facilities or services ''readily accessible to and usable by'' individuals with disabilities. The American Bus Association expressed similar views.

Disability community commenters took the opposite position. For example, the Paralyzed Veterans of America/Consortium of Citizens with Disabilities (PVA/CCD) comments said that the ''accessibility to such bus'' term in section 306 demonstrated that ''Congress plainly indicated its preference for judging accessibility by a vehicle standard rather than a service equivalency standard.'' The Department's OTRB regulations should be consistent with those for other ''private primarily engaged'' operators except where the OTRB statutory language differs. Moreover, OTA's findings and conclusions should be ''presumptively determinative'' of the Department's regulatory decisions. PVA/CCD also assert that OTRB requirements are properly viewed as applying to used as well as new OTRBs. The Disability Rights Education and Defense Fund (DREDF) made similar arguments, stating that Congress mandated that ''each individual OTRB should be accessible,'' rather than allowing a generalized service standard. In addition, DREDF supported, with respect to service in the interim before all buses are accessible, having a boarding chair on each bus and opposed any advance notice requirements.

Analysis

The Department takes the position that it has substantial legal discretion to devise regulations to implement the OTRB requirements of the ADA. DOT could require that OTRB operators meet standards like those applied to other ''private, primarily engaged'' transportation providers by section 304(b)(3), but the Department is not required to do so. The Department may consider both vehicle-based and service-based approaches to OTRB accessibility, and may consider other factors such as cost. However, the Department is also not mandated by the statute or its legislative history to choose the least costly, or arguably most cost-effective, approach to OTRB access.

1. Separate Statutory Requirements

The first reason for this conclusion is that Congress explicitly separated the requirements for most ''private primarily engaged'' transportation providers, set forth in section 304(b)(3), from those for OTRB operators, set forth in section 304(b)(4). The former requirement tells fixed route operators to purchase or lease accessible new (but not used) vehicles and tells demand responsive operators to purchase or lease accessible new (but not used) vehicles or ensure that they can provide equivalent service to individuals with disabilities. The latter requirement is simply that the purchase or lease of OTRBs (with no distinction stated between new and used buses) must comply with the regulations issued by DOT under section 306(a)(2).

Had Congress wished to mandate that OTRB requirements be identical with those applying to other ''private primarily engaged'' transportation providers, Congress could simply have included OTRBs under the requirements of section 304(b)(3), perhaps with an effective date delayed until 1996/97. Instead, Congress specifically said that section 304(b)(3) requirements apply to vehicles ''other than * * * an over-the-road bus'' and assigned to the Department responsibility for devising OTRB requirements.

2. Different Accessibility Language

The second reason is that Congress intentionally chose different language to express the accessibility requirements for OTRB operators and other ''private primarily engaged'' providers, respectively. As noted above, section 306(a)(2) provides that the Department's regulations must require ''each private entity which uses an over-the-road bus to provide accessibility to such bus to individuals with disabilities, including individuals who use wheelchairs.'' Disability group comments asserted that the ''accessibility to such bus'' language should be understood to require that each OTRB must be an accessible bus (e.g., have the accessibility features identified by OTA).

While this language does lend some support to the idea that Congress intended buses to be accessible, it differs from language Congress used elsewhere in the ADA (e.g., section 304(b)(3)), where Congress required that a vehicle be ''readily accessible to and usable by'' individuals with disabilities. This latter phrase clearly refers to a vehicle that has accessibility features of the kind cited by OTA or required by 49 CFR Part 38. By using a different term, ''accessibility to such bus,'' Congress at least left open the possibility of accessibility being provided by other means.

3. Intent of OTA Study

The third reason for the Department's conclusion concerning its discretion flows from an analysis of the ADA's language and legislative history concerning the OTA report. Section 306(a)(2)(B)(ii) tells the Department to consider not only the recommendations of the OTA study but also its ''purposes.'' The House legislative history said that one important purpose, to be achieved before mandating any particular boarding options, was to study ''the access needs of individuals with disabilities to these buses and the cost-effectiveness of different methods of providing such access.'' (H. Rept. 101–485, Pt. 1, at 40–41). Specifically, the study was to review both ''vehicle-specific aspects of over-the-road buses * * * [and] system-wide aspects of over-the-road bus service. Both aspects * * * are included so that neither is favored over the other in the organization of the study.'' (Id.) All types of methods (including boarding chairs, lifts, ramps, and others) were to be considered. While the Senate legislative history had a stronger (though not exclusive) focus on the use of lift technology, the Conference Committee language states that all forms of boarding options and access to buses and bus service were to be analyzed by the study.

Since Congress intended OTA to study and make recommendations concerning these matters, it is fair to infer that DOT, mandated to take the purposes and recommendations of the study into account, is entitled to consider the same factors and options in its rulemaking. The same point applies with respect to other matters that Congress told OTA to study, such as the demand for accessible OTRB service, the cost of providing accessible OTRBs and OTRB service, and the impact of accessibility requirements on the continuation of OTRB service, particularly in rural areas. Nothing in the statute or the legislative history requires that any of these factors be emphasized to the exclusion of others.

Policy Basis for Proposed Rule

We view the way that the Department uses its considerable legal discretion to shape this proposed regulation as being primarily a policy decision about what is necessary to ensure that individuals with disabilities, including wheelchair users, can realize the rights to nondiscriminatory treatment guaranteed them by the ADA and can effectively

use OTRB buses and service. In the Department's view, it is necessary, to achieve these goals, to ensure that passengers who use wheelchairs can ride, board, and disembark from OTRBs while using their own wheelchairs.

Approaches not permitting passengers to remain in their own wheelchairs involve a minimum of four transfers on each trip (not counting rest or intermediate stops)—from wheelchair to boarding chair or device, and from boarding chair or device to vehicle seat, at the start of the trip, with the process reversed at the end of the trip. This increases the probability of discomfort, indignity, and injury, compared to a trip that does not involve transfers.

Moreover, wheelchairs used by disabled passengers are often quite different from one another, reflecting the individual needs of their users. Vehicle seats are uniform, and consequently do not provide the same comfort and support as the passenger's own wheelchair. This can have health and safety implications for mobility-impaired passengers.

Many mobility-impaired passengers use electric wheelchairs. Many such chairs are large and heavy. Others are of the ''scooter'' type. It is likely that most electric wheelchairs will not fit into bus luggage compartments. Based on experience in the airline industry, the process of stowing and retrieving electric wheelchairs carries a significant risk of damage to the expensive devices. Bus service to passengers who use electric wheelchairs cannot be effective if transportation for the wheelchairs is unavailable.

Because accessible lavatories reduce seating capacity, the Department will not propose requiring them in OTRBs. This creates fewer problems for passengers if the buses are accessible. If passengers are seated in their own wheelchairs in lift-equipped buses, they can readily get on and off the bus at rest stops. If not, then four more transfers, and potential schedule disruptions, would be involved in allowing wheelchair users to take advantage of rest stops.

The bus industry has proposed meeting these objectives primarily through having a number of accessible OTRBs in a pool, available to disabled passengers who make reservations 48 hours in advance (similar to Option 3, summarized below). The industry asserts that such an arrangement could provide lift-equipped bus service to all passengers needing it, in a less costly and more cost-effective fashion (i.e., with a considerably lower cost per stimulated trip). The Department's regulatory assessment, summarized below, displays the Department's estimates of the cost differences among options. The industry also asserts that this kind of service could become effective more rapidly than a requirement to make all new buses accessible, since it would take 12 years to move to full fleet accessibility.

Pooling and advance reservation systems have some merit, as they allow carriers to make more efficient use of the accessible buses they have to provide transportation to passengers with disabilities. Indeed, the proposed rule contemplates charter/tour operators using pooling arrangements. It also contemplates using pooling arrangements in fixed route service as an interim measure to provide accessible transportation in the years before fleets become fully accessible.

With respect to fixed route services, however, the drawback to pooling/advance reservation systems is one of equal treatment. This is a matter of significance in a rule implementing a nondiscrimination statute. While reservation service is available to passengers for fixed route service in many instances, fixed route OTRB passengers generally are not required to make reservations. Requiring disabled passengers to make reservations on a permanent basis falls short of providing equal conditions of service for disabled passengers, who may want to travel on short notice as much as other passengers. It also increases the probability of administrative error interfering with passengers' travel plans. While we understand the view of the industry that it is preferable, for cost-related reasons, to rely on on-call service with 48-hour advance reservations required, we find it difficult to reconcile this requirement with the ADA's nondiscrimination mandate.

Requiring all new buses to be lift-equipped is consistent with the requirements for all other modes of transportation under the ADA (e.g., all new fixed-route transit buses; all new rapid, commuter, and intercity rail cars; and all new full-size fixed-route private buses other than OTRBs are already required to be accessible). We believe that there is considerable merit in proposing requirements that parallel the requirements of other portions of the ADA.

The Department is not persuaded, however, that the intermodal cost comparisons put forward in the Greyhound study are germane. The ADA imposes accessibility requirements on each mode independently (e.g., urban mass transit bus and rail, intercity rail) without making any statement that relative burdens somehow must be equalized across very different types of transportation. In particular, Greyhound's comparison between intercity bus and airline service overlooks the fact that FAA safety regulations concerning seats and seat anchorages preclude disabled passengers from remaining in their own wheelchairs aboard aircraft. The Department's Air Carrier Access Act rules involve assisted boarding and transfers out of passengers' own wheelchairs because safety requirements peculiar to aviation leave no better accessibility option available. Where better options are available, as they are for OTRBs, it is difficult to argue that they should not be used.

The Department has paid careful attention to the cost and demand data presented in the OTA and Greyhound studies. There is no question that requiring new accessible buses is a costlier option than the pooling/transfer alternatives suggested by the Greyhound study (though the costs of the proposed provisions, as estimated by the regulatory assessment, do not appear to impose an undue financial burden on the industry). In the context of the ADA, however, cost determinations, standing alone, are not necessarily determinative. The statute does not provide that the Department is compelled to meet the needs of disabled passengers in ''a cost-effective manner.'' Cost-effectiveness is one of the considerations that OTA was directed to study, and which the Department is taking into account, but the statute does not mandate that cost-effectiveness considerations trump all others in determining how to make bus travel accessible.

We are concerned that the Greyhound study appears to confuse cost-effectiveness with profitability (i.e., it identifies as cost-effective only those options that result in a net surplus to the company). The study also bases its conclusions about cost-effectiveness on very low demand estimates drawn from a few, scattered systems that require advance notice and do not offer connectivity to the national transportation network that Greyhound provides other customers. While OTA demand estimates may err on the side of generosity, the Greyhound estimates may err on the side of conservatism.

The Department will continue to consider costs as it decides, after reviewing comments, what to require in a final rule. The Department remains open to considering options other than the one it is proposing. However, the Department believes, at this time, that the following provisions would most appropriately implement the

nondiscrimination requirements of the ADA.

Description of the Proposed Rule

The NPRM would create a new subpart of the Department's ADA rule (49 CFR Part 37, Subpart F). Proposed § 37.111 would restate the statutory compliance dates of two years for larger carriers and three years for smaller carriers. If the final regulation is published on the Department's target date of September 15, 1998, then the rule would begin to apply to larger carriers in October 2000 and to smaller carriers in October 2001. We propose to distinguish between larger and smaller carriers based on the class into which the carrier falls. Class I carriers (i.e., passenger carriers with gross annual transportation operating revenues of $5 million or more, as provided in Surface Transportation Board regulations found in 49 CFR 1249.3, including the ''deflator'' provision of those rules) would be viewed as larger carriers. Everyone else would be regarded as a smaller carrier. We would add an item to the definitions section of the rule incorporating this distinction.

Section 37.112 states the basic requirement of the proposed rule. Beginning on the dates mentioned above, fixed route carriers (''private entities primarily engaged in providing transportation to people'') would have to ensure that new OTRBs they receive are accessible. By an accessible bus, we mean one that meets the OTRB requirements we are proposing to add to 49 CFR part 38. The Part 38 requirements are identical to the proposed OTRB guidelines being promulgated by the Access Board, and include on-board lifts and wheelchair securement locations. It should be noted that, while these guidelines include information about accessible restrooms, the Department is not proposing to require accessible restrooms on OTRBs, since existing accessible restrooms would result in a loss of seating capacity.

We call commenters' attention to the fact that all new OTRBs received by entities after the applicability date would have to be accessible. In the 1990 ADA rule for mass transit, the Department provided that all new transit buses ordered after the effective date had to be accessible. We propose to handle this issue differently in this rule because OTRB operators have 2–3 years from the effective date of a final regulation before accessibility requirements fully apply. The transit rules began to apply 30 days from the issuance of the rule. Unlike the transit operators, OTRB operators will have plenty of time to place orders for accessible vehicles well in advance of the application date.

As in the case of other operators covered by the ADA ''private primarily'' rules, OTRB operators would not have to ensure that used buses were accessible. Nor would they be required to retrofit vehicles. While the Department has the legal discretion to impose such a requirement with respect to OTRBs, requiring either the purchase of accessible used vehicles (which will not be available in large numbers for some years) or retrofitting (a costly procedure on a bus which has consumed part of its expected useful life) would be too costly and unnecessarily inconsistent with the ADA's requirements in similar contexts. However, as in other parts of the ADA rule, proposed § 37.118 would require remanufactured buses to be made accessible.

Demand-responsive carriers (e.g., charter/tour operators) who obtain new buses would also have to obtain accessible buses, unless and until they fully meet the fleet and service requirements of §§ 37.114–37.115, discussed below. This parallels the accessible vehicle or equivalent service scheme of other ADA requirements for demand-responsive service.

Proposed § 37.113 is a fleet accessibility requirement for fixed route operators. It would require each large operator to ensure that, within 6 years from the applicability date of the rule (e.g., October 2006), half its OTRBs were accessible. All its OTRBs would have to be accessible within 12 years (e.g., October 2012). The 6- and 12-year time frames are based on information in the Greyhound study that Greyhound replaces 1/12 of its fleet per year. (For cost analysis purposes, the Department is using an 11-year fleet replacement period for the entire industry.) The Department seeks comment on the best number of years to include for this purpose (e.g., would 4 and 10 years be better, given the 2–3 years carriers have available before the effective date of the rule?). In addition to being consistent with existing industry practice, this provision is intended to provide a disincentive to carriers obtaining large numbers of inaccessible buses in the time between now and the applicability date of the rules or to deferring purchases of accessible OTRBs until much later in the process, either of which would postpone full fleet accessibility.

One alternative that has been suggested to a fleet accessibility time frame is a requirement that companies retrofit any inaccessible OTRB obtained between the effective date of the final rule and the applicability date to the company (e.g., between October 1998 and October 2000 for large operators). This would also be a disincentive to purchasing large numbers of inaccessible OTRBs in the interim, but would potentially be more costly and would not address the issue of deferred purchases of accessible vehicles. We seek comment on this and other alternatives.

The NPRM proposes an important exception to the fleet accessibility rule. If small operators did not obtain enough new buses to replace 50 percent of their fleet in 6 years or all of their fleet in 12, they would be excused from this requirement. This exception is proposed in light of the practice of many smaller operators of obtaining most or all of their vehicles used. Absent the proposed exception, these companies would have to buy new buses or retrofit used buses to meet the fleet accessibility requirement. The exception will allow these operators to continue their existing procurement practices, thereby reducing potential economic burdens on small entities. Their fleets will become accessible in later years when their sources of used buses have fleets consisting of accessible vehicles. In the meantime, they would have to meet interim service requirements (see proposed § 37.116).

Demand-responsive operators would also have a fleet accessibility requirement (proposed § 37.114). These operators would have to ensure that 10 percent of their fleets are accessible within two years of the applicability date of the rule to them. The Department seeks comment both on the fleet accessibility percentage and the time frame. Again, there would be an exception for small operators who did not obtain enough new buses in the two year period to replace 10 percent of their fleets.

Proposed § 37.115 sets forth a service requirement for demand-responsive operators. Beginning two years after the applicability date of the rule to an entity, the entity would have to ensure that a disabled passenger who asked for service in an accessible OTRB would get it. The operator could ask for 48 hours' advance notice. Advance notice is less onerous in a charter/tour situation, for which most passengers book seats in advance. For example, suppose a small Baltimore charter/tour operator has 20 buses. By October 2005, the operator may well have two accessible OTRBs in its fleet. When the operator is running a trip to Atlantic City, a mobility-impaired passenger who calls 48 hours in advance will have to receive service

in an accessible OTRB. If the operator does not have an accessible OTRB, or one of its own is not available at the time , the operator would obtain an accessible OTRB from a pool or a sharing arrangement with other operators. The Department seeks comment on whether it is realistic to assume that pool arrangements are practicable, particularly for small operators.

Section 37.116 concerns interim service, which operators would have to provide in the years before they had fully implemented all their accessibility requirements. The section would work as follows. From the effective date of the rule (e.g., October 1998) until the applicability date of accessibility requirements to operators (e.g., October 2000 or 2001, depending on the size of the operator), the existing interim service requirements of § 37.169 would continue to apply to operators. In the two-year period beginning with that applicability date (e.g., October 2000–October 2002 for a large operator), operators would to continue to comply with existing § 37.169, unless they had already complied with all of its permanent accessibility requirements. Section 37.169 would be phased out for large operators four years after the effective date of this rule and for small operators five years after the effective date of this rule (e.g., October 2002 or 2003, respectively).

By two years from the applicability date of the rule (e.g., October 2002 for large operators) demand-responsive operators would be required to meet their permanent requirements of 10 percent accessible buses in their fleets plus providing on-call accessible bus service on 48 hours' advance notice. Since it will take fixed-route operators longer to acquire enough buses to have a fully accessible fleet, they would have to meet a continuing interim service requirement. Beginning in 2002, large operators would have to provide on-call accessible bus service on 48 hours' advance notice until such time as their fleets became fully accessible. The requirements for small operators would be the same, but they would start a year later.

So far, the rule has focused on private entities primarily in the business of transporting people. Proposed section 37.117 concerns private entities not primarily in this business. The rules parallel other ADA transportation requirements. Operators providing fixed route service, when they get new buses, must get accessible buses (paralleling the requirements for ''private not primarilies'' in the ADA and DOT's regulations, this requirement applies to all buses an operator obtains, not just new buses). Demand responsive operators, when they get new buses, must either get accessible buses or ensure that they can provide equivalent service. ''Private not primarilies'' would not have fleet accessibility or interim requirements.

Proposed § 37.119 concerns the issue of intermediate and rest stops. This issue arises on both fixed route and demand-responsive service. The NPRM proposes that, when an accessible OTRB makes a rest or intermediate stop, a mobility-impaired passenger will have a chance to take advantage of the stop the same as other passengers, through the use of the lift to leave and re-enter the bus. The situation is more problematic when an inaccessible OTRB is involved. We propose that a mobility-impaired passenger will have the chance to use the rest stop, with the driver's assistance in leaving and re-entering the vehicle, to the extent feasible, without unreasonably delaying the trip. That is, if getting a portable lift out of the baggage compartment, doing four transfers, using the facilities, and reversing the process takes so long that the schedule is seriously disrupted, the operator could decline to provide the service. This clearly presents problems to disabled passengers, especially given the absence of on-board accessible restrooms, which is one of the reasons we believe that accessible buses are a superior long-term solution.

We seek comments on two matters concerning rest stops on trips provided by inaccessible buses. First, should the ability of an operator to decline to provide rest stop service to a passenger on the basis of delay apply only to express trips, where the effects of delay would be most detrimental? Second, how long a delay should be regarded as unreasonable, such that an operator could decline to provide the service to passengers with disabilities?

Proposed § 37.120 would make applicable to OTRB operators the training, service and lift maintenance requirements that apply to other forms of bus service. The Department seeks comments whether any provisions should be added, deleted, or changed. With respect to training, the training requirements section of the Department's existing ADA rule (49 CFR § 37.173) requires all transportation providers to ensure that their personnel are trained to proficiency to operate vehicles and equipment safely and properly and safely and properly assist passengers with disabilities. This requirement would apply to carriers using OTRBs with respect to all equipment and services provided for under the proposed rule. The Department's cost estimates for this NPRM include the costs of this training. The Department seeks comment on whether any additional or more specific training or service requirements should be added concerning OTRBs. For example, should there be any requirements concerning how OTRB operators should provide service when the number of wheelchair users seek to travel on a particular trip exceeds the number of wheelchair locations on the bus?

The Access Board and the Department elsewhere in this issue of the **Federal Register** are also publishing proposed accessibility guidelines for OTRBs. They would become part of 49 CFR part 38, the Department's accessibility rules that accompany the DOT ADA rule. One issue on which we seek comment is whether, if a bus meets the requirements for wheelchair locations and an entry door accessible to wheelchair users but does not have an on-board lift, it is appropriate to regard the bus as accessible if it will always be used only for trips between stations that are equipped with station-based lifts that will accommodate passengers' own wheelchairs.

Regulatory Analyses and Notices

This is a significant regulatory proposal under Executive Order 12866 and the Department's Regulatory Policies and Procedures, both because of its cost impacts on the industry and the strong public interest in accessibility matters. The Department has prepared a regulatory evaluation to accompany the NPRM, which we have placed in the docket for the rulemaking. The Office of Management and Budget (OMB) has reviewed this NPRM.

In considering what to propose in this NPRM, the Department considered three basic options for fixed route service. These options are discussed in detail in the regulatory evaluation. The following are summaries of these options and their overall costs. The costs for each option include the costs for the proposed accessibility requirements for demand-responsive systems, but all the variance among the options is accounted for by differences among the fixed route options.

1. *Accessible OTRBs*—All new OTRBs must be accessible. Fleets of large fixed route carriers must be 50% accessible within 6 years and 100% accessible within 12 years. Used buses do not have to be accessible. Small carriers do not have fleet accessibility requirements. Since many small carriers buy primarily used buses, this means that their fleets would not become accessible until accessible used buses became widely

available in the market. Interim service that makes accessible OTRBs available on 48 hours' notice is required beginning after two years. The estimated total cost of this option ranges from $349.7 to $470.9 million over 22 years (net present value over 22 years is $203.6–$261.4 million). The difference between the high and low ends of the range is determined principally by whether operators choose to obtain less or more expensive lifts.

2. *Station-Based Lifts Only*—This option is similar to the following option, except that there is no accessible OTRB or on-call service requirement. It provides less service than other options and has a lower cost. The estimated total cost is $62.2 million over 22 years (net present value over 22 years is $22.7 million).

3. *Station-Based Lifts with On-call Accessible Buses*—Service would be provided through station-based lifts or other appropriate technology for 50% of a carrier's boardings within 2 years and 80% within 7 years. Within two years, 15% of a large carrier's fleet would have to be accessible. Beginning in two years, carriers would have to provide service in accessible buses, on 48 hours' notice, to passengers who could not be served adequately by a station-based-lift system. To make such a system work for small intercity carriers, especially those who did not yet have accessible buses of their own, there would have to be pooling arrangements among carriers. The estimated total cost is $152.9 million over 22 years (net present value over 22 years is $92.5 million).

The following table displays the annual aggregate costs (discounted and annualized) of each of the three fixed route options, expressed in millions of year 2000 dollars. Again, the costs for each option include the costs for the proposed accessibility requirements for demand-responsive systems, but all the variance among the options is accounted for by differences among the fixed route options.

Option	1 (high)	1 (low)	2	3 (low)
Gross Costs	45.20	39.07	16.23	18.72
Increased Revenues	19.90	19.90	11.00	14.11
Net Costs	25.30	19.17	5.23	4.61

A number of points of explanation are needed to understand this table. ''Gross costs'' include equipment (e.g., lifts on buses) and training, as well as the costs of seating capacity lost when wheelchair users travel on bus trips that are within three persons of being filled to capacity. ''Increased revenues'' include the revenue generated by stimulated trips taken by disabled passengers and their friends or family. ''Net costs'' are the difference between the two. It should also be noted that the costs stated for Options 2 and 3 cover only intercity fixed route services and do not include the local fixed route services that are included under Option 1.

As noted elsewhere in this preamble, there is a great deal of uncertainty about the amount of demand that would be stimulated by accessible OTRB service. We believe that Option 2 would generate significantly fewer trips than Option 1. For purposes of our analysis, we have assumed that Option 2 would generate only 25 percent as many trips as would be realized with a system of all lift-equipped buses, and we have projected the revenues accordingly. We believe that it is even more difficult to predict—or even assume—that Option 3 would generate a particular percentage of the demand stimulated by a system of all life-equipped buses. Consequently, the increased revenue figure found in the table for Option 3 ($13.85 million) represents the stimulated demand (about 70 percent of demand generated if all buses are lift-equipped) that would be necessary for increased revenue to break even with fixed route accessibility costs. We do not know whether Option 3 would succeed in obtaining this percentage of demand generated by a system of all lift-equipped buses, however.

Another way of comparing costs is on the basis of cost per stimulated trip. The following table displays, in millions of year 2000 dollars, the gross and net annualized costs for additional each trip generated by each of the options. The notes about the previous table apply to this table as well.

Option	1 (high)	1 (low)	2	3 (low)
Gross Cost	53.49	46.24	27.92	27.81
Net Cost	29.95	23.55	8.99	6.84

It should be noted that, if the costs of accessibility are spread over all trips made by OTRB passengers, rather than only over stimulated trips, the per trip costs are much smaller, in the area of $.35 per trip.

The NPRM proposes the first option, since it is does the best job of providing meaningful accessibility and avoiding discriminatory treatment of passengers with disabilities. In the Department's view, the costs of the first option, while higher than the other two options, are not so great as to impose undue or unreasonable burdens on bus operators. The Department will consider comments concerning all the options, and others which commenters may wish to suggest, as we work toward a final rule. In addition, in the period between the issuance of the final rule and the compliance dates for carriers, the Department will be willing to consider suggestions for modification of whatever option is chosen if it appears that fully satisfactory, but different, arrangements are in place to meet the travel needs of passengers with disabilities in a nondiscriminatory manner.

In terms of the Regulatory Flexibility Act, this proposal is likely to have a significant economic impact on a substantial number of small entities. We have incorporated a Regulatory Flexibility Analysis into the regulatory evaluation. Briefly, we would point out that the additional year's phase-in time provided by statute and the small entity exception to the fleet accessibility requirement should reduce the burdens of the proposed rule on small operators.

In order to assist the Department's analysis of the costs and benefits of various options for accessible OTRB service at the final rule stage, particularly—though not solely—for small entities, the Department requests that commenters provide information on the following questions:

(1) What is the level of ridership for local fixed route and small intercity operators? For charter/tour operators? What are the average fares for these services?

(2) How much price elasticity is there for bus purchases by small operators? That is, if an accessible bus costs a given amount more than an inaccessible bus, how many fewer buses are small operators likely to acquire?

(3) How much price elasticity is there for small operators with respect to fares? That is, will acquisition of accessible buses cause small operators to raise their fares a given amount? If so, what effect will this have on ridership?

(4) Is there additional information about maintenance and repair costs to small operators for used accessible OTRBs they obtain that the Department should take into account?

(5) Is there information about patronage, load factors, and average fares, as well as information on the number of buses in charter/tour service, for each part of the OTRB industry?

(6) What is the proportion of new vs. used buses acquired by companies in each part of the OTRB industry?

(7) How would the proposed bus pooling arrangements work, either in demand responsive service as this NPRM proposes or in fixed-route service as in Option 3 above? Where would the buses come from? Would small carriers receive buses on reasonable terms and in a timely fashion?

(8) Is the experience of public mass transit service with respect to usage of buses by persons with mobility impairments relevant to projecting stimulated demand for over-the-road bus service, or is the analogy too tenuous to support any inferences from one mode to another? The Federal Transit Administration does not receive reports on bus usage by people with mobility impairments; is it available from other sources?

(9) Is there any data from which it would be possible to draw inferences about the demand that would be stimulated by Option 3 (15 percent of fleets consisting of accessible buses, with 48-hour on-call service) vs. Option 1 (all new fixed route buses accessible)? Stated another way, is there a basis for estimating how much additional demand would be generated under Option 1, compared to Option 3?

We note that the class of small operators (i.e., all who are not Class I carriers) does not directly reference the Small Business Administration (SBA) size standards that include most or all OTRB operators (i.e., major group 41 in the SBA size standards found in 13 CFR Part 121). The standards are substantively very close to one another. The break points between small and large operators for the Class I and the SBA definitions are, respectively, $5.3 million and $5 million in annual revenues. The Department seeks comment on these alternative standards.

This NPRM does not contain information collection requirements requiring OMB review under the Paperwork Reduction Act.

List of Subjects in 49 CFR Part 37

Buildings and facilities, Buses, Civil rights, Individuals with disabilities, Mass transportation, Railroads, Transportation.

Issued This 19th day of March 1998, at Washington, DC.

Rodney E. Slater,

Secretary of Transportation.

For the reasons set forth in the preamble, 49 CFR Part 37 is proposed to be amended as follows:

PART 37—TRANSPORTATION SERVICES FOR INDIVIDUALS WITH DISABILITIES (ADA)

1. The authority for Part 37 is proposed to be revised to read as follows:

Authority: 42 U.S.C. 12101–12213; 49 U.S.C. 322.

2. Section 37.3 of Part 37 is proposed to be amended by adding the following definition, placed in alphabetical order with the existing definitions, to read as follows:

§ 37.3 Definitions.

* * * * *

Small operator means, in the context of over-the-road buses (OTRBs), a private entity primarily in the business of transporting people that is not a Class I motor carrier (i.e., a carrier having average annual gross transportation operating revenues of $5.3 million or more from passenger motor carrier operations, as provided in Department of Transportation regulations, 49 CFR 1249.3).

* * * * *

3. Subparts F and G are proposed to be redesignated as subparts G and H.

4. A new Subpart F, consisting of §§ 37.111 through 37.120, is proposed to be added to part 37, to read as follows:

Subpart F—Over-the-Road Buses (OTRBs)

Sec.

37.111 Application.
37.112 Purchase or lease of new OTRBs by private entities primarily in the business of transporting people.
37.113 Fleet accessibility requirement for OTRB fixed route systems.
37.114 Fleet accessibility requirement for OTRB demand-responsive systems.
37.115 Service requirement for OTRB demand-responsive systems.
37.116 Interim service requirements.
37.117 Purchase or lease of OTRBs by private entities not primarily in the business of transporting people.
37.118 Remanufactured OTRBs.
37.119 Intermediate and rest stops.
37.120 Other service requirements.

Subpart F—Over-the-Road Buses (OTRBs)

§ 37.111 Application.

This subpart applies to all private entities that operate OTRBs beginning [a date two years after the effective date of this subpart] or, in the case of small operators, beginning [a date three years after the effective date of this subpart].

§ 37.112 Purchase or lease of new OTRBs by private entities primarily in the business of transporting people.

The following requirements apply to private entities that are primarily in the business of transporting people, whose operations affect commerce, and that operate OTRBs, with respect to buses delivered to them on or after the date on which this subpart applies to them:

(a) *Fixed route systems.* If the entity operates a fixed route system, and purchases or leases a new OTRB, it shall ensure that the vehicle is readily accessible to and usable by individuals with disabilities, including individuals who use wheelchairs.

(b) *Demand responsive systems.* If an entity operates a demand responsive system, and purchases or leases a new OTRB, it shall ensure that the vehicle is readily accessible to and usable by individuals with disabilities, including individuals who use wheelchairs, unless the system fully meets the requirements of §§ 37.114 and 37.115.

§ 37.113 Fleet accessibility requirement for OTRB fixed route systems.

Each private entity primarily in the business of transporting people, whose operations affect commerce, and that provides fixed-route OTRB service shall ensure that—

(a) By a date 6 years from the date on which this subpart applies to the entity, no less than 50 percent of the buses in its fleet with which it provides fixed route service are readily accessible to and usable by individuals with disabilities, including individuals who use wheelchairs.

(b) By a date 12 years from the date on which this subpart applies to the entity, 100 percent of the buses in its fleet with which it provides fixed route service are readily accessible to and usable by individuals with disabilities, including individuals who use wheelchairs.

(c) *Exception for small operators:* A small operator that does not purchase enough new OTRBs to replace 50 percent of its fleet by a date 6 years from the date on which this subpart applies to the operator or 100 percent of its fleet by a date 12 years from the date on which this subpart applies to the operator is excused from meeting the requirements of paragraphs (a) and (b), respectively, of this section by those dates.

§ 37.114 Fleet accessibility requirement for OTRB demand-responsive systems.

(a) Each private entity primarily in the business of transporting people, whose

operations affect commerce, and that provides demand-responsive OTRB service shall ensure that, by a date 2 years from the date on which this subpart applies to the entity, no less than 10% of the buses in its fleet with which it provides demand responsive service are readily accessible to and usable by individuals with disabilities, including individuals who use wheelchairs.

(b) *Exception for small operators:* A small operator that does not purchase enough new buses to replace 10 percent of its fleet by a date 2 years from the date on which this subpart applies to the operator is excused from meeting the requirements of paragraph (a) of this section by that date.

§ 37.115 Service requirement for OTRB demand-responsive systems

Each private entity primarily in the business of transporting people, whose operations affect commerce, and that provides demand-responsive OTRB service shall ensure that, by a date 2 years from date on which the subpart applies to the entity, any individual with a disability that requests service in an accessible OTRB receives such service. The entity may require up to 48 hours' advance notice to provide this service. If the individual with a disability does not provide the advance notice the entity requires, the entity shall nevertheless provide the service if it can do so by making a reasonable effort.

§ 37.116 Interim service requirements

(a) Until 100 percent of the fleet of an entity providing fixed route service is composed of accessible OTRBs, the entity shall meet the following interim service requirements:

(1) By a date 2 years from the date on which this subpart applies to the entity, ensure any individual with a disability that requests service in an accessible OTRB receives such service. The entity may require up to 48 hours' advance notice to provide this service. If the individual with a disability does not provide the advance notice the entity requires, the entity shall nevertheless provide the service if it can do so by making a reasonable effort. If the trip on which the person with a disability wishes to travel is already provided by an accessible bus, the entity has met this requirement.

(2) Before a date 2 years from the date on which this subpart applies to the entity, an entity which is unable to provide the service specified in paragraph (a) of this section shall continue to comply with the requirements of § 37.169.

(b) Before a date 2 years from the date on which this subpart applies to the entity, an entity providing demand responsive service which is unable to provide the service specified in § 37.115 shall meet the requirements of § 37.169.

§ 37.117 Purchase or lease of OTRBs by private entities not primarily in the business of transporting people.

This section applies to all purchases or leases of vehicles by private entities which are not primarily engaged in the business of transporting people, with respect to buses delivered to them on or after the date on which this subpart begins to apply to them.

(a) *Fixed route systems.* If the entity operates a fixed route system and purchases or leases an OTRB for use on the system, it shall ensure that the vehicle is readily accessible to and usable by individuals with disabilities, including individuals who use wheelchairs.

(b) *Demand responsive systems.* If the entity operates a demand responsive system, and purchases or leases an OTRB for use on the system, it shall ensure that the vehicle is readily accessible to and usable by individuals with disabilities, including individuals who use wheelchairs, unless the system, when viewed in its entirety, meets the standard for equivalent service of § 37.105.

§ 37.118 Remanufactured OTRBs.

(a) This section applies to any private entity operating OTRBs which takes one of the following actions:

(1) On or after the date on which this subpart applies to the entity, it remanufactures an OTRB so as to extend its useful life for five years or more or makes a solicitation for such remanufacturing; or

(2) Purchases or leases an OTRB which has been remanufactured so as to extend its useful life for five years or more, where the purchase or lease occurs after the date on which this subpart applies to the entity and during the period in which the useful life of the vehicle is extended.

(b) Vehicles acquired through the actions listed in paragraph (a) of this section shall, to the maximum extent feasible, be readily accessible to and usable by individuals with disabilities, including individuals who use wheelchairs.

(c) For purposes of this section, it shall be considered feasible to remanufacture an OTRB so as to be readily accessible to and usable by individuals with disabilities, including individuals who use wheelchairs, unless an engineering analysis demonstrates that including accessibility features required by this part would have a significant adverse effect on the structural integrity of the vehicle.

§ 37.119 Intermediate and rest stops.

(a) Whenever an accessible OTRB makes an intermediate or rest stop, a passenger with a disability, including an individual using a wheelchair, shall be permitted to leave and return to the bus on the same basis as other passengers. The driver shall operate the lift and provide assistance with securement as needed.

(b) Whenever an inaccessible OTRB makes an intermediate or rest stop, a passenger with a disability, including an individual using a wheelchair, shall be permitted to leave and return to the bus on the same basis as other passengers to the extent feasible. The driver or other operator personnel shall provide the assistance specified in § 37.116(a)(2). The entity is not required to unreasonably delay the bus in order to provide this service.

§ 37.120 Other service requirements.

(a) OTRB operators shall comply with the requirements of §§ 37.161, 37.165–37.167, and 37.173.

(b) The following additional requirements apply to the maintenance of lifts on OTRBs:

(1) The entity shall establish a system of regular and frequent maintenance checks of lifts sufficient to determine if they are operative.

(2) The entity shall ensure that vehicle operators report to the entity, by the most immediate means available, any failure of a lift to operate in service.

(3) Except as provided in paragraph (c) of this section, when a lift is discovered to be inoperative, the entity shall take the vehicle out of service before the beginning of the vehicle's next trip and ensure that the lift is repaired before the vehicle returns to service.

(c) If there is no other vehicle available to take the place of an OTRB with an inoperable lift, such that taking the vehicle out of service before its next trip will reduce the transportation service the entity is able to provide, the entity may keep the vehicle in service with an inoperable lift for no more than five days from the day on which the lift is discovered to be inoperative.

5. A new paragraph (g) is proposed to be added to § 37.169, to read as follows:

§ 37.169 Interim requirements for over-the-road bus service operated by private entities.

* * * * *

(g) This section shall cease to apply to small operators of over-the-road buses, as defined in § 37.3, on [a date five years from the effective date of this paragraph], and shall cease to apply to other operators of over-the-road buses on [a date four years from the effective date of this paragraph]

[FR Doc. 98–7675 Filed 3–20–98; 11:24 am]

BILLING CODE 4910–62–P

ARCHITECTURAL AND TRANSPORTATION BARRIERS COMPLIANCE BOARD

36 CFR Part 1192

[Docket No. 98–1]

RIN 3014–AA23

DEPARTMENT OF TRANSPORTATION

Office of the Secretary

49 CFR Part 38

Americans With Disabilities Act Accessibility Guidelines for Transportation Vehicles; Over-the-Road Buses

AGENCIES: Architectural and Transportation Barriers Compliance Board and Department of Transportation.

ACTION: Joint notice of proposed rulemaking.

SUMMARY: The Architectural and Transportation Barriers Compliance Board and the Department of Transportation propose to amend the accessibility guidelines and standards for over-the-road buses (OTRBs) to include technical specifications for lifts, ramps, wheelchair securement devices, and accessible restrooms, under the Americans with Disabilities Act. Revisions to the specifications for doors, steps, and lighting are also proposed. The specifications describe the design features that an OTRB must have to be readily accessible to and usable by persons who use wheelchairs or other mobility aids. The Department of Transportation has published a separate notice of proposed rulemaking elsewhere in today's **Federal Register** which addresses when OTRB operators are required to comply with the specifications.

DATES: Comments should be received by May 26, 1998. Late comments will be considered to the extent practicable.

ADDRESSES: Comments should be sent to the Office of Technical and Information Services, Architectural and Transportation Barriers Compliance Board, 1331 F Street NW., suite 1000, Washington, DC 20004–1111. Comments will be available for inspection at the above address from 9:00 a.m. to 5:30 p.m. on regular business days. The Access Board will provide copies of all comments received to the Department of Transportation.

FOR FURTHER INFORMATION CONTACT: *Access Board:* Dennis Cannon, Office of Technical and Information Services, Architectural and Transportation Barriers Compliance Board, 1331 F Street, NW., suite 1000, Washington, DC 20004–1111. Telephone number (202) 272–5434 extension 35 (voice); (202) 272–5449 (TTY). Electronic mail address: cannon@access-board.gov.

Department of Transportation: Robert C. Ashby, Deputy Assistant General Counsel for Regulation and Enforcement, Department of Transportation, 400 7th Street SW., room 10424, Washington, DC 20590. Telephone (202) 366–9306 (voice) or (202) 755–7687 (TTY).

The telephone numbers listed above are not toll-free numbers.

SUPPLEMENTARY INFORMATION:

Availability of Copies and Electronic Access

Single copies of this publication may be obtained at no cost by calling the Access Board's automated publications order line (202) 272–5434, by pressing 1 on the telephone keypad, then 1 again, and requesting publication S–21 (Over-the-Road Buses Proposed Rule). Persons using a TTY should call (202) 272–5449. Please record a name, address, telephone number and request publication S–21. This document is available in alternate formats upon request. Persons who want a copy in an alternate format should specify the type of format (cassette tape, Braille, large print, or computer disk). This document is also available on the Board's Internet site (http://www.access-board.gov/rules/otrbnprm.htm).

Background

Under the Americans with Disabilities Act of 1990 (ADA), the Architectural and Transportation Barriers Compliance Board (Access Board) is responsible for developing guidelines to ensure that the various kinds of transportation vehicles covered by the law are readily accessible to and usable by individuals with disabilities.[1] 42 U.S.C. 12204. The Department of Transportation (DOT), which is responsible for issuing regulations to implement the transportation provisions of the ADA, is required to include in its regulations accessibility standards for vehicles that are consistent with the Access Board's guidelines. 42 U.S.C. 12186.

For purposes of the ADA, an over-the-road bus is ''a bus characterized by an elevated passenger deck located over a baggage compartment.'' 42 U.S.C. 12181(5). The ADA provides for rulemaking to establish accessibility requirements for OTRBs operated by private entities to be conducted in two stages: interim requirements and final requirements. 42 U.S.C. 12186.[2]

The interim requirements were established in 1991 and do not require any structural changes to OTRBs. The Access Board issued accessibility guidelines for OTRBs that provide technical specifications for non-structural design features such as floor surfaces, lighting, and handrails and stanchions. 36 CFR 1192.151 to 1192.157. The DOT adopted these guidelines as its standards and also established interim requirements for providing boarding assistance and accommodating wheelchairs and other mobility aids. 49 CFR 37.169 and 49 CFR 38.151 to 38.157.

Prior to establishing the final requirements, the Office of Technology Assessment was to study issues related to OTRB accessibility. 42 U.S.C. 12185. The Office of Technology Assessment published its study on May 16, 1993. Requirements for accessibility were to have taken effect by July 26, 1996, for large transportation providers, and one year later for small entities. 42 U.S.C. 12186. The National Highway System Designation Act of 1995 (Pub. L. 104–59), amended section 306(a)(2)(B)(iii) of the ADA by removing the specific compliance dates and instead requiring large transportation providers to comply two years after the issuance of the DOT regulation, and small providers to comply three years after issuance.

As a preliminary step to issuing requirements, the Access Board and the DOT held a workshop in Washington,

---

[1] The Access Board is an independent Federal agency established by section 502 of the Rehabilitation Act of 1973, as amended, whose primary mission is to promote accessibility for individuals with disabilities. The Access Board consists of 25 members. Thirteen are appointed by the President from among the public, a majority of whom are required to be individuals with disabilities. The other twelve are heads of the following Federal agencies or their designees whose positions are Executive Level IV or above: The Departments of Health and Human Services, Education, Transportation, Housing and Urban Development, Labor, Interior, Defense, Justice, Veterans Affairs, and Commerce; General Services Administration; and United States Postal Service.

[2] OTRBs purchased by public entities or by a contractor to a public entity must currently meet the same accessibility requirements as do other buses, including requirements for lifts or ramps and wheelchair securement devices. 49 CFR 37.7(c).

D.C. on October 21 and 22, 1993, to discuss issues related to OTRB accessibility. About 30 representatives of the OTRB industry and disability organizations attended the workshop. At the workshop, it was announced that the Access Board and the DOT were considering amending the accessibility guidelines and standards for OTRBs to include technical specifications for:

- Lifts, ramps, and wheelchair securement devices based on existing requirements for other buses in 36 CFR 1192.23 and 49 CFR 38.23;
- Accessible restrooms based on existing requirements for commuter and intercity rail cars in 36 CFR 1192.107 and 1192.123, and 49 CFR 38.107 and 38.123; and
- Front door width, overhead clearance for doors with lifts or ramps, and step riser height and tread depth.

This notice of proposed rulemaking (NPRM) is issued jointly by the Access Board and the DOT to amend the accessibility guidelines and standards for OTRBs, as discussed at the workshop. The NPRM also proposes to revise the exterior lighting specification for OTRBs and other buses based on an equivalent facilitation determination made by the DOT.

The DOT is publishing a separate NPRM elsewhere in today's **Federal Register** which addresses when OTRB operators are required to comply with the specifications.

Section-by-Section Analysis

Section____.31 Lighting

The NPRM proposes to amend paragraph (c) of this section for standard urban transit buses to conform to the proposal for OTRBs. See the discussion under Section____.157

Section____.153 Doors, Steps and Thresholds

The NPRM proposes to amend paragraph (b) of this section by adding a requirement for a maximum step riser height (8 inches) and minimum step tread depth (11 inches) based on accessibility standards for buildings and facilities. The DOT's regulations currently require that standees be permitted to use lifts. 49 CFR 37.165(g). However, the rise of a lift for an OTRB is much higher than for a typical urban transit bus. The higher rise may make some persons with disabilities, especially those with poor balance, feel uncomfortable and insecure about using the lift, even though it is required to have handrails.

Provisions for step riser height and tread depth were originally proposed for other buses in 1991 but not adopted at the time because lifts were required to accommodate standees and because there were structural difficulties in achieving the proposed provisions. Subsequently, new vehicle designs such as several models of low-floor buses, have made the reduction of step risers practical for urban transit buses. Designs for OTRBs also may have changed since 1991.

Question 1: Should minimum requirements for step riser height and tread depth be established for OTRBs? Are the proposed requirements achievable within the constraints imposed by vehicle structure? Are other requirements more appropriate? Alternatively, are there current lift designs (e.g., folding seats) which would reduce the feeling of insecurity a standee using the lift might experience?

The NPRM proposes to amend paragraph (c) of this section to specify a minimum front door width (30 inches) consistent with other vehicles. This door width is intended to partially accommodate persons using crutches or leg braces or having gait problems who may wish to use the steps instead of the lift. Doors in accessible buildings and facilities are required to provide a 32 inch clear opening based on the crutchtip-to-crutchtip stance of a crutch user. The narrower dimension proposed in the NPRM will provide better access than current OTRB designs for persons who must swing their legs to climb steps. Since a wider opening is needed primarily at the bottom of the door and current designs frequently slope the windshield inward, the proposed requirement would permit the door to taper from a point 48 inches above the first step. It would also limit the intrusion into the required clear width by hinges or other operating mechanisms.

Question 2: Some OTRB designs have doors which are wider than 30 inches. Is a 32 inch width achievable? What would be the cost if engineering changes are needed?

The NPRM proposes to add a new paragraph (d) to this section which specifies a minimum overhead clearance (68 inches) between the top of the door opening and the raised lift platform or highest point of a ramp. A similar provision currently applies to other buses over 22 feet in length. 36 CFR 1192.25(c) and 49 CFR 38.25(c). This clearance is intended to minimize the likelihood that standees using a lift would hit their heads when passing through the door. A lower clearance is required for vehicles of 22 feet or less in length to avoid having to add a large raised roof to a minivan which could make the vehicle unstable. This is not a problem for large buses.

Unlike urban transit buses, lifts for OTRBs have been placed in a dedicated door near the rear of the vehicle. Typical lift doors for OTRBs have a vertical clearance of 61 inches. Some OTRBs have been designed with a 68 inch clearance at the lift door.

Question 3: What OTRB models can meet a 68 inch clearance at the lift door? What are the structural and cost implications of achieving this height? Should requirements be established for both step riser height and tread depths at the front door and overhead clearance at the lift door, or should these requirements be considered alternatives to one another?

The DOT has previously determined for other buses that an ''elevator'' type lift provides equivalent facilitation to the door height provision. The platform of an ''elevator'' type lift moves completely within the vehicle envelope. A standee would board the lift from ground level by passing through the doorway with a clearance greater than 68 inches and be raised within the bus. Thus, a standee would never need to pass through the doorway when the lift is raised and would not encounter the door lintel. There is at least one ''elevator'' type lift for OTRBs.

Question 4: Should ''elevator'' type lifts be specifically addressed in the guidelines and standards? Information is requested on these lift designs, their cost, and how much baggage space is occupied when the device is stowed.

Some information has recently come to the Board's attention regarding the effect of providing a lift door in the side of a monocoque construction bus. The Board seeks data, including the results of any engineering studies, which document any structural problems and effect on bus life-cycle costs. In some accessible OTRB designs, the lift door is placed toward the rear, close to the rear wheels, while in others it is placed at the bus mid-point, at the maximum bending moment of the vehicle.

Question 5: What effect does door placement have on the structural integrity of a monocoque construction OTRB? Also, urban transit buses have had rear doors for years, some wider than others and some with lifts. What are the comparisons between urban transit buses and OTRBs in terms of life-cycles? Some transit buses no longer employ monocoque construction. Are there OTRBs which also no longer employ monocoque construction?

Section____.157 Lighting

The NPRM proposes to delete the requirement in paragraph (b) of this

section that exterior lights be mounted below window level. The original provision was based on an earlier Federal Transit Administration regulation. 49 CFR 609.15(g)(3). Subsequent to the issuance of that regulation, the Federal Transit Administration began accepting buses which conform to the ''Baseline Specifications for Advance Design Buses'' (White Book). The White Book permits exterior lights to be mounted in locations other than below the windows. The DOT has determined that compliance with the exterior lighting requirements of the White Book constitutes equivalent facilitation. The NPRM also proposes to delete a similar requirement for other buses in 36 CFR 1192.31(c) and 49 CFR 38.31(c).

Section____.159 Mobility Aid Accessibility

This section is based on the current requirements for lifts, ramps, and wheelchair securement devices in 36 CFR 1192.23 and 49 CFR 38.23 which apply to urban transit buses and OTRBs purchased by public entities. The section has been modified by eliminating the references to vehicles of 22 feet or less in length since all OTRBs exceed this length. Paragraph (a)(2), which is taken from the requirements for rail vehicles, permits OTRBs to use station-based lifts, ramps, or similar boarding devices, provided they meet the technical requirements that would have applied to a vehicle-borne device.

The requirements for securement devices in paragraph (d) are the same as those currently required for urban transit buses and OTRBs purchased by public entities. Bus seats are required to be attached to the bus frame and meet specified forces. The design load established for securement devices is based on the need to secure the wheelchair or mobility aid with constraints similar to those imposed on all other seats.

Question 6a: Are OTRB seats required to meet force and attachment strengths greater than the seats on urban transit buses? If so, what are those forces and how do they relate to requirements for mobility aid securement devices?

Considerable speculation has been put forth regarding whether the securement force requirements for urban transit buses are adequate for OTRBs. The concern is that OTRBs often travel at higher speeds than urban transit buses and collisions would be at higher speeds. However, it is not the speed *per se* but the ''g-forces'' experienced that is important. Since larger vehicles have their own momentum, the deceleration of a mobility aid with respect to the securement device is less for heavier vehicles. Thus, the current securement device force requirements are greater for small vans than for large buses. 36 CFR 1191.23(d)(1) and 49 CFR 38.23(d)(1).

Question 6b: Since OTRBs are generally heavier than urban transit buses, how will this weight difference affect securement device forces?

Several public transit agencies, and some state agencies, currently operate OTRBs for commuter service on highways at high speed. These vehicles must meet not only the requirements for force, but the limitation on motion of the mobility aid and the requirement for accommodating all common wheelchairs and mobility aids. These securement systems consist of belts or straps that are fastened by the vehicle operator. There is no known commercially available system which is independently operable by the mobility aid user that can accommodate all common wheelchairs and mobility aids, but the common belt systems have been used for many years in public transit applications.

Question 6c: What has been the experience of operators of OTRBs meeting the current securement specification?

Section____.161 Restrooms

Section 306(a)(2)(C) of the ADA specifies that the DOT regulation shall not require the installation of accessible restrooms in OTRBs if such installation would result in a loss of seating capacity. DOT has stated in its NPRM that it has found no designs which do not result in seat loss and, therefore, does not intend to require them. Nevertheless, some entities have elected to provide accessible restrooms as a courtesy to their passengers with disabilities. The specifications in this section are meant to ensure that, where such restrooms are provided voluntarily, they meet some minimum accessibility requirements. However, these technical provisions may be more appropriate for the advisory guidance in the Appendix than the rule itself.

This section is derived from current requirements for restrooms on commuter and intercity rail cars in 36 CFR 1192.107 and 1192.123, and 49 CFR 38.107 and 38.123. The rail car requirement relating to a door from the side has been deleted since the width restrictions on OTRBs would generally preclude a side entrance. The requirement for a 60 inch clear floor space from the front of the water closet is designed to provide some maneuvering space for side door entry. If the entry is from the end opposite the water closet, a shorter space may be workable. These requirements are considered the bare minimum and persons with disabilities have reported difficulty in using current rail car restrooms which meet these requirements.

At least two OTRB manufacturers have designed accessible restrooms for their buses. Also, OTRBs with accessible restrooms are currently operating in commuter service near Los Angeles, California. However, those restrooms may not meet the requirements of this section and a wheelchair user must back into the restroom. The particular design does provide a side approach to the water closet, unlike the rail car version.

Question 7: Are there OTRB restroom designs which provide better accessibility than proposed? Are such restrooms currently in production or available if ordered? What is the cost of providing such restrooms and how many seats are displaced by the design?

In addition, some OTRB operators have provided moveable aisle armrests on some seats. These armrests make it easier for persons to get in and out of closely spaced seats, especially for those with poor balance or mobility.

Question 8: Should a certain percentage of seats be required to have moveable aisle armrests? If so, what percentage and where should they be located (e.g., close to the entry steps)?

Finally, seat loss is a concern of OTRB operators. Some OTRB designs involve sliding sets of pedestal seats forward, rendering them unusable when a wheelchair or mobility aid user is occupying the securement location. Also, some configurations assume a five-foot turning circle must be provided, whereas the vehicle specifications do not require it.

Question 9: What seating configurations have been designed for OTRBs? Has any configuration been developed which would allow a fixed seat adjacent to the securement location for a traveling companion?

Regulatory Process Matters

This proposed rule is jointly issued by the Access Board and the DOT to amend the accessibility guidelines and standards for OTRBs by adding technical specifications for lifts, ramps, wheelchair securement devices, and accessible restrooms. The proposed rule also revises technical specifications for doors, steps, and lighting. DOT has published a separate proposed rule in today's **Federal Register** which addresses when OTRB operators are required to comply with the technical specifications. The proposed rules are closely related and the Access Board

and the DOT have treated them as a single regulatory action for purposes of Executive Order 12866 and the Regulatory Flexibility Act in order to avoid duplicative or unnecessary analyses. The proposed rules are a significant regulatory action under Executive Order 12866 and DOT's Regulatory Policies and Procedures. DOT has prepared a Regulatory Impact Analysis (RIA), which is summarized in the separate proposed rule the DOT has published in today's **Federal Register**. The Office of Management and Budget has reviewed both proposed rules.

The proposed rules are likely to have a significant impact on a substantial number of small entities. DOT has incorporated a Regulatory Flexibility Analysis into the RIA and has included provisions in the separate proposed rule published in today's **Federal Register** to reduce the burden on small OTRB operators.

Text of Proposed Common Rule

The text of the proposed common rule amendments to 36 CFR part 1192 and 49 CFR part 38 appear below.

1. Section ____.31 is amended by revising paragraph (c) to read as follows:

§ ____.31 Lighting.

* * * *

(c) The vehicle doorways, including doorways in which lifts or ramps are installed, shall have outside light(s) which, when the door is open, provide at least 1 foot-candle of illumination on the street surface for a distance 3 feet (915 mm) perpendicular to all points on the bottom step tread outer edge. Such light(s) shall be shielded to protect the eyes of entering and exiting passengers.

2. Section ____.153 is amended by revising paragraphs (b) and (c), and by adding paragraph (d) to read as follows:

§ ____.153 Doors, steps and thresholds.

* * * * *

(b) All step edges shall have a band of color(s) running the full width of the step which contrasts from the step tread and riser, either dark-on-light or light-on-dark. The maximum height of step risers shall be 8 inches (200 mm) and the minimum tread depth shall be 11 inches (280 mm).

(c) Doors shall have a minimum clear width when open of 30 inches (760 mm), measured from the lowest step to a height of at least 48 inches (1220 mm), from which point they may taper to a minimum width of 27 inches (690 mm). The clear width may be reduced by a maximum of 4 inches (100 mm) by protrusions of hinges or other operating mechanisms if the protrusion is between 44 (1120 mm) and 48 inches (1220 mm) above the lowest step.

(d) The overhead clearance between the top of the door opening and the raised lift platform, or highest point of a ramp, shall be a minimum of 68 inches (1730 mm).

3. Section ____.157 is amended by revising paragraph (b) to read as follows:

§ ____.157 Lighting.

* * * * *

(b) The vehicle doorway shall have outside light(s) which, when the door is open, provide at least 1 foot-candle of illumination on the street surface for a distance 3 feet (915 mm) perpendicular to all points on the bottom step tread outer edge. Such light(s) shall be shielded to protect the eyes of entering and exiting passengers.

4. Section ____.159 is revised to read as follows:

§ ____.159 Mobility aid accessibility.

(a)(1) *General.* All vehicles covered by this subpart shall provide a level-change mechanism or boarding device (e.g., lift or ramp) complying with paragraph (b) or (c) of this section and sufficient clearances to permit a wheelchair or other mobility aid user to reach a securement location. At least two securement locations and devices, complying with paragraph (d) of this section, shall be provided.

(2) *Exception:* If portable or station-based lifts, ramps or bridge plates meeting the applicable requirements of this section are provided at stations or other stops required to be accessible under regulations issued by the Department of Transportation, the bus is not required to be equipped with a vehicle-borne device.

(b) *Vehicle lift*—(1) *Design load.* The design load of the lift shall be at least 600 pounds (2665 N). Working parts, such as cables, pulleys, and shafts, which can be expected to wear, and upon which the lift depends for support of the load, shall have a safety factor of at least six, based on the ultimate strength of the material. Nonworking parts, such as platform, frame and attachment hardware which would not be expected to wear, shall have a safety factor of at least three, based on the ultimate strength of the material.

(2) *Controls*—(i) *Requirements.* The controls shall be interlocked with the vehicle brakes, transmission, or door, or shall provide other appropriate mechanisms or systems, to ensure that the vehicle cannot be moved when the lift is not stowed and so the lift cannot be deployed unless the interlocks or systems are engaged. The lift shall deploy to all levels (i.e., ground, curb, and intermediate positions) normally encountered in the operating environment. Where provided, each control for deploying, lowering, raising, and stowing the lift and lowering the roll-off barrier shall be of a momentary contact type requiring continuous manual pressure by the operator and shall not allow improper lift sequencing when the lift platform is occupied. The controls shall allow reversal of the lift operation sequence, such as raising or lowering a platform that is part way down, without allowing an occupied platform to fold or retract into the stowed position.

(ii) *Exception.* Where the lift is designed to deploy with its long dimension parallel to the vehicle axis and which pivots into or out of the vehicle while occupied (i.e., ''rotary lift''), the requirements of this paragraph prohibiting the lift from being stowed while occupied shall not apply if the stowed position is within the passenger compartment and the lift is intended to be stowed while occupied.

(3) *Emergency operation.* The lift shall incorporate an emergency method of deploying, lowering to ground level with a lift occupant, and raising and stowing the empty lift if the power to the lift fails. No emergency method, manual or otherwise, shall be capable of being operated in a manner that could be hazardous to the lift occupant or to the operator when operated according to manufacturer's instructions, and shall not permit the platform to be stowed or folded when occupied, unless the lift is a rotary lift and is intended to be stowed while occupied.

(4) *Power or equipment failure.* Platforms stowed in a vertical position, and deployed platforms when occupied, shall have provisions to prevent their deploying, falling, or folding any faster than 12 inches/second (305 mm/sec) or their dropping of an occupant in the event of a single failure of any load carrying component.

(5) *Platform barriers.* The lift platform shall be equipped with barriers to prevent any of the wheels of a wheelchair or mobility aid from rolling off the platform during its operation. A movable barrier or inherent design feature shall prevent a wheelchair or mobility aid from rolling off the edge closest to the vehicle until the platform is in its fully raised position. Each side of the lift platform which extends beyond the vehicle in its raised position shall have a barrier a minimum 1–½ inches (13 mm) high. Such barriers shall not interfere with maneuvering into or out of the aisle. The loading-edge barrier (outer barrier) which functions as a loading ramp when the lift is at ground

level, shall be sufficient when raised or closed, or a supplementary system shall be provided, to prevent a power wheelchair or mobility aid from riding over or defeating it. The outer barrier of the lift shall automatically raise or close, or a supplementary system shall automatically engage, and remain raised, closed, or engaged at all times that the platform is more than 3 inches (75 mm) above the roadway or sidewalk and the platform is occupied. Alternatively, a barrier or system may be raised, lowered, opened, closed, engaged, or disengaged by the lift operator, provided an interlock or inherent design feature prevents the lift from rising unless the barrier is raised or closed or the supplementary system is engaged.

(6) *Platform surface.* The platform surface shall be free of any protrusions of ¼ inch (6.5 mm) high and shall be slip resistant. The platform shall have a minimum clear width of 28–½ inches (725 mm) at the platform, a minimum clear width of 30 inches (760 mm) measured from 2 inches (50 mm) above the platform surface to 30 inches (760 mm) above the platform, and a minimum clear length of 48 inches (1220 mm) measured from 2 inches (50 mm) above the surface of the platform to 30 inches (760 mm) above the surface of the platform. (See Fig. 1 to this part)

(7) *Platform gaps.* Any openings between the platform surface and the raised barriers shall not exceed ⅝ inch (16 mm) in width. When the platform is at vehicle floor height with the inner barrier (if applicable) down or retracted, gaps between the forward lift platform edge and the vehicle floor shall not exceed ½ inch (13 mm) horizontally and ⅝ inch (16 mm) vertically. Platforms on semi-automatic lifts may have a hand hold not exceeding 1–½ inches (28 mm) by 4–½ inches (113 mm) located between the edge barriers.

(8) *Platform entrance ramp.* The entrance ramp, or loading-edge barrier used as a ramp, shall not exceed a slope of 1:8, measured on level ground, for a maximum rise of 3 inches (75 mm), and the transition from roadway or sidewalk to ramp may be vertical without edge treatment up to ¼ inch (6.5 mm) . Thresholds between ¼ inch (6.5 mm) and ½ inch (13 mm) high shall be beveled with a slope no greater than 1:2.

(9) *Platform deflection.* The lift platform (not including the entrance ramp) shall not deflect more than 3 degrees (exclusive of vehicle roll or pitch) in any direction between its unloaded position and its position when loaded with 600 pounds (2665 N) applied through a 26 inch (660 mm) by 26 inch test pallet at the centroid of the platform.

(10) *Platform movement.* No part of the platform shall move at a rate exceeding 6 inches/second (150 mm/sec) during lowering and lifting an occupant, and shall not exceed 12 inches/second (300 mm/sec) during deploying or stowing. This requirement does not apply to the deployment or stowage cycles of lifts that are manually deployed or stowed. The maximum platform horizontal and vertical acceleration when occupied shall be 0.3g.

(11) *Boarding direction.* The lift shall permit both inboard and outboard facing of wheelchair and mobility aid users.

(12) *Use by standees.* Lifts shall accommodate persons using walkers, crutches, canes or braces or who otherwise have difficulty using steps. The platform may be marked to indicate a preferred standing position.

(13) *Handrails.* Platforms on lifts shall be equipped with handrails on two sides, which move in tandem with the lift, and which shall be graspable and provide support to standees throughout the entire lift operation. Handrails shall have a usable component at least 8 inches (200 mm) long with the lowest portion a minimum 30 inches (760 mm) above the platform and the highest portion a maximum 38 inches (965 mm) above the platform. The handrails shall be capable of withstanding a force of 100 pounds (445 N) concentrated at any point on the handrail without permanent deformation of the rail or its supporting structure. The handrail shall have a cross-sectional diameter between 1–¼ inches (32 mm) and 1–½ inches (38 mm) or shall provide an equivalent grasping surface, and have eased edges with corner radii of not less than ⅛ inch (3.5 mm). Handrails shall be placed to provide a minimum 1–½ inches (38 mm) knuckle clearance from the nearest adjacent surface. Handrails shall not interfere with wheelchair or mobility aid maneuverability when entering or leaving the vehicle.

(c) *Vehicle ramp*—(1) *Design load.* Ramps 30 inches (760 mm) or longer shall support a load of 600 pounds (2665 N), placed at the centroid of the ramp distributed over an area of 26 inches by 26 inches (660 mm by 660 mm), with a safety factor of at least 3 based on the ultimate strength of the material. Ramps shorter than 30 inches (760 mm) shall support a load of 300 pounds (1332 N).

(2) *Ramp surface.* The ramp surface shall be continuous and slip resistant; shall not have protrusions from the surface greater than ¼ inch (6.5 mm) high; shall have a clear width of 30 inches (760 mm); and shall accommodate both four-wheel and three-wheel mobility aids.

(3) *Ramp threshold.* The transition from roadway or sidewalk and the transition from vehicle floor to the ramp may be vertical without edge treatment up to ¼ inch (6.5 mm). Changes in level between ¼ inch (6.5 mm) and ½ inch (13 mm) shall be beveled with a slope no greater than 1:2.

(4) *Ramp barriers.* Each side of the ramp shall have barriers at least 2 inches (50 mm) high to prevent mobility aid wheels from slipping off.

(5) *Slope.* Ramps shall have the least slope practicable and shall not exceed 1:4 when deployed to ground level. If the height of the vehicle floor from which the ramp is deployed is 3 inches (75 mm) or less above a 6 inch (150 mm) curb, a maximum slope of 1:4 is permitted; if the height of the vehicle floor from which the ramp is deployed is 6 inches (150 mm) or less, but greater than 3 inches (75 mm), above a 6 inch (150 mm) curb, a maximum slope of 1:6 is permitted; if the height of the vehicle floor from which the ramp is deployed is 9 inches (225 mm) or less, but greater than 6 inches (150 mm), above a 6 inch curb, a maximum slope of 1:8 is permitted; if the height of the vehicle floor from which the ramp is deployed is greater than 9 inches (225 mm) above a 6 inch (150 mm) curb, a slope of 1:12 shall be achieved. Folding or telescoping ramps are permitted provided they meet all structural requirements of this section.

(6) *Attachment.* When in use for boarding or alighting, the ramp shall be firmly attached to the vehicle so that it is not subject to displacement when loading or unloading a heavy power mobility aid and that no gap between vehicle and ramp exceeds ⅝ inch (16 mm).

(7) *Stowage.* A compartment, securement system, or other appropriate method shall be provided to ensure that stowed ramps, including portable ramps stowed in the passenger area, do not impinge on a passenger's wheelchair or mobility aid or pose any hazard to passengers in the event of a sudden stop or maneuver.

(8) *Handrails.* If provided, handrails shall allow persons with disabilities to grasp them from outside the vehicle while starting to board, and to continue to use them throughout the boarding process, and shall have the top between 30 inches (760 mm) above the ramp surface. The handrails shall be capable of withstanding a force of 100 pounds (445 N) concentrated at any point on the handrail without permanent deformation of the rail or its supporting

structure. The handrail shall have a cross-sectional diameter between 1¼ inches (32 mm) and 1½ inches (38 mm) or shall provide an equivalent grasping surface, and have eased edges with corner radii of not less than ⅛ inch (3.5 mm). Handrails shall not interfere with wheelchair or mobility aid maneuverability when entering or leaving the vehicle.

(d) *Securement devices*—(1) *Design load.* Securement systems, and their attachments to vehicles, shall restrain a force in the forward longitudinal direction of up to 2,000 pounds (8,880 N) per securement leg or clamping mechanism and a minimum of 4,000 pounds (17,760 N) for each mobility aid.

(2) *Location and size.* The securement system shall be placed as near to the accessible entrance as practicable and shall have a clear floor area of 30 inches (760 mm) by 48 inches (1220 mm). Such space shall adjoin, and may overlap, an access path. Not more than 6 inches (150 mm) of the required clear floor space may be accommodated for footrests under another seat, modesty panel, or other fixed element provided there is a minimum of 9 inches (230 mm) from the floor to the lowest part of the seat overhanging the space. Securement areas may have fold-down seats to accommodate other passengers when a wheelchair or mobility aid is not occupying the area, provided the seats, when folded up, do not obstruct the clear floor space required. (See Fig. 2 to this part)

(3) *Mobility aids accommodated.* The securement system shall secure common wheelchairs and mobility aids and shall either be automatic or easily attached by a person familiar with the system and mobility aid and having average dexterity.

(4) *Orientation.* At least one securement device or system required by paragraph (a) of this section shall secure the wheelchair or mobility aid facing toward the front of the vehicle. Additional securement devices or systems shall secure the wheelchair or mobility aid facing forward or rearward. Where the wheelchair or mobility aid is secured facing the rear of the vehicle, a padded barrier shall be provided. The padded barrier shall extend from a height of 38 inches (965 mm) from the vehicle floor to a height of 56 inches (1420 mm) from the vehicle floor with a width of 18 inches (455 mm), laterally centered immediately in back of the seated individual. Such barriers need not be solid provided equivalent protection is afforded.

(5) *Movement.* When the wheelchair or mobility aid is secured in accordance with manufacturer's instructions, the securement system shall limit the movement of an occupied wheelchair or mobility aid to no more than 2 inches (50 mm) in any direction under normal vehicle operating conditions.

(6) *Stowage.* When not being used for securement, or when the securement area can be used by standees, the securement system shall not interfere with passenger movement, shall not present any hazardous condition, shall be reasonably protected from vandalism, and shall be readily accessed when needed for use.

(7) *Seat belt and shoulder harness.* For each wheelchair or mobility aid securement device provided, a passenger seat belt and shoulder harness, complying with all applicable provisions of the Federal Motor Vehicle Safety Standards, shall also be provided for use by wheelchair or mobility aid users. Such seat belts and shoulder harnesses shall not be used in lieu of a device which secures the wheelchair or mobility aid itself.

5. Section ____.161 is added to subpart G to read as follows:

§ ____.161 Restrooms.

(a) If an accessible restroom is provided, it shall be designed so as to allow a person using a wheelchair or mobility aid to enter and use such restroom as specified in paragraphs (a)(1) through (5) of this section.

(1) The minimum clear floor area shall be 35 inches (890 mm) by 60 inches (1525 mm). Permanently installed fixtures may overlap this area a maximum of 6 inches (150 mm), if the lowest portion of the fixture is a minimum of 9 inches (230 mm) above the floor, and may overlap a maximum of 19 inches (485 mm), if the lowest portion of the fixture is a minimum of 29 inches (740 mm) above the floor, provided such fixtures do not interfere with access to the water closet. Fold-down or retractable seats or shelves may overlap the clear floor space at a lower height provided they can be easily folded up or moved out of the way.

(2) The height of the water closet shall be 17 inches (430 mm) to 19 inches (485 mm) measured to the top of the toilet seat. Seats shall not be sprung to return to a lifted position.

(3) A grab bar at least 24 inches (610 mm) long shall be mounted behind the water closet, and a horizontal grab bar at least 40 inches (1015 mm) long shall be mounted on at least one side wall, with one end not more than 12 inches (305 mm) from the back wall, at a height between 33 inches (840 mm) and 36 inches (915 mm) above the floor.

(4) Faucets and flush controls shall be operable with one hand and shall not require tight grasping, pinching, or twisting of the wrist. The force required to activate controls shall be no greater than 5 lbs (22.2 N). Controls for flush valves shall be mounted no more than 44 inches (1120 mm) above the floor.

(5) Doorways on the end of the enclosure, opposite the water closet, shall have a minimum clear opening width of 32 inches (815 mm). Door latches and hardware shall be operable with one hand and shall not require tight grasping, pinching, or twisting of the wrist.

(b) Accessible restrooms shall be in close proximity to at least one seating location for persons using mobility aids and shall be connected to such a space by an unobstructed path having a minimum width of 32 inches (815 mm).

6. A heading is added at the end of part ____ preceding the figures to read as follows:

Figures to Part ____

7. Figures 1 and 2 are republished for the convenience of the reader to read as follows:

BILLING CODES 8150–01–P; 4910–62–P

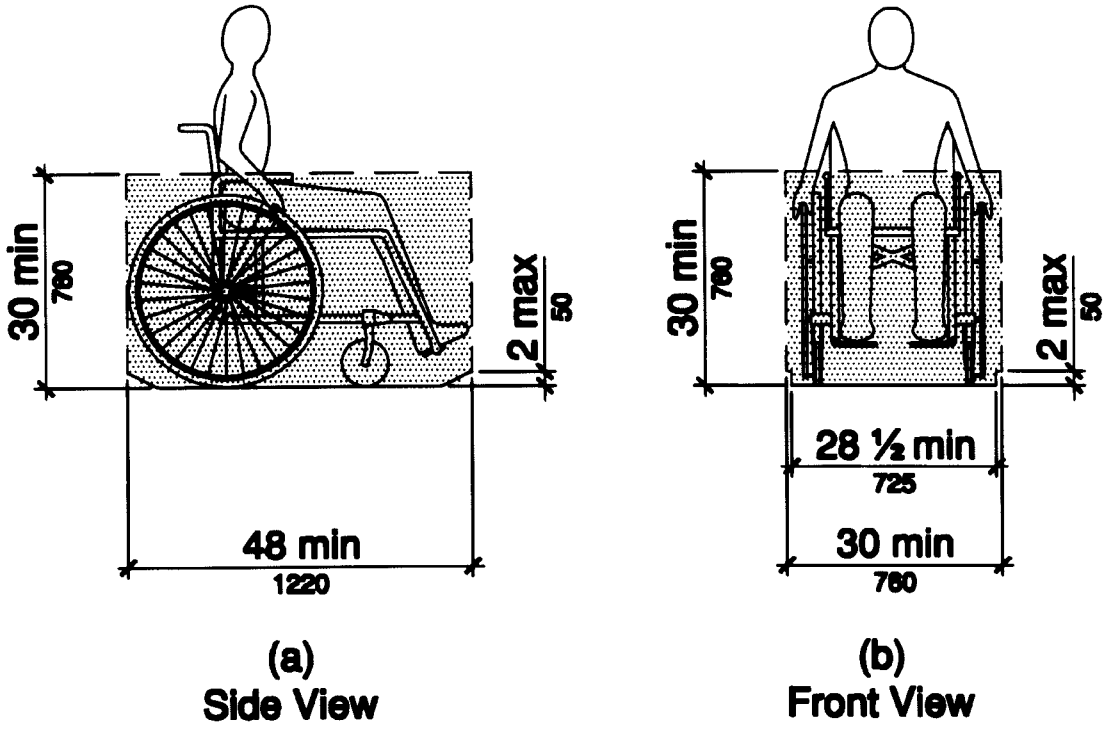

Figure 1
Wheelchair or Mobility Aid Envelope

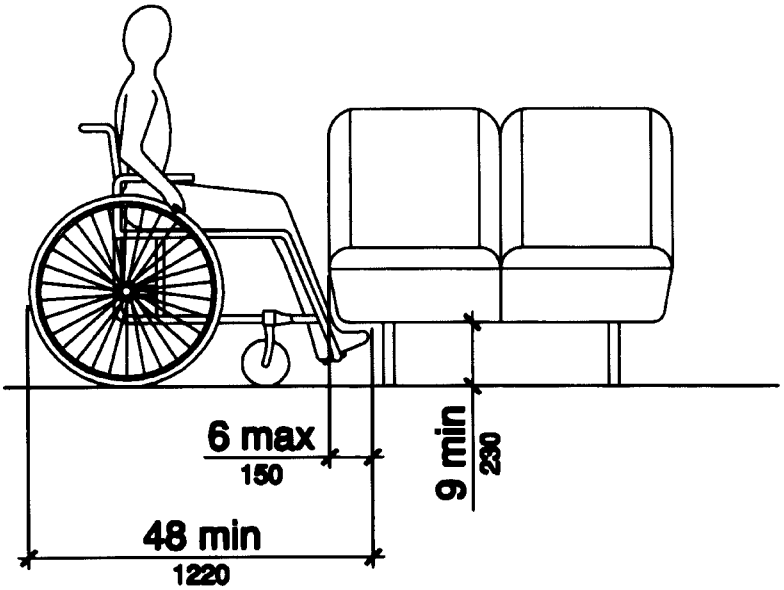

Figure 2
Toe Clearance Under a Fixed Element

BILLING CODES 8150–01–C; 4910–62–C

Adoption of Proposed Common Rule

The agency specific proposals to adopt the common rule, which appears at the end of the common preamble, are set forth below.

Architectural and Transportation Barriers Compliance Board

36 CFR Part 1192

List of Subjects in 36 CFR Part 1192

Buses, Civil rights, Individuals with disabilities, Mass transportation, Railroads, Transportation.

Authority and Issuance

For the reasons set forth in the common preamble, part 1192 of title 36 of the Code of Federal Regulations is proposed to be amended as follows:

PART 1192—AMERICANS WITH DISABILITIES ACT (ADA) ACCESSIBILITY GUIDELINES FOR TRANSPORTATION VEHICLES

1. The authority citation for 36 CFR part 1192 is revised to read as follows:

Authority: 42 U.S.C. 12204.

§ 1192.31 [Amended]

2. Section 1192.31 is amended by revising paragraph (c) to read as set forth at the end of the common preamble.

§ 1192.153 [Amended]

3. Section 1192.153 is amended by revising paragraphs (b) and (c), and by adding paragraph (d) to read as set forth at the end of the common preamble.

§ 1192.157 [Amended]

4. Section 1192.157 is amended by revising paragraph (b) to read as set forth at the end of the common preamble.

§ 1192.159 [Revised]

5. Section 1192.159 is revised to read as set forth at the end of the common preamble.

§ 1192.161 [Added]

6. Section 1192.161 is added to subpart G to read as set forth at the end of the common preamble.

7. A heading is added at the end of part 1192 preceding the figures to read as set forth at the end of the common preamble.

Authorized by vote of the Access Board on January 28, 1998.

Patrick D. Cannon,

Chair, Architectural and Transportation Barriers Compliance Board.

DEPARTMENT OF TRANSPORTATION

Office of the Secretary

49 CFR Part 38

List of Subjects in 49 CFR Part 38

Buses, Civil rights, Individuals with disabilities, Mass transportation, Railroads, Transportation.

Authority and Issuance

For the reasons set forth in the common preamble, part 38 of title 49 of the Code of Federal Regulations is amended as follows:

PART 38—AMERICANS WITH DISABILITIES ACT (ADA) ACCESSIBILITY SPECIFICATIONS FOR TRANSPORTATION VEHICLES

1. The authority citation for 49 CFR part 38 is revised to read as follows:

Authority: 42 U.S.C. 12101–12213; 49 U.S.C. 322.

§ 38.31 [Amended]

2. Section 38.31 is amended by revising paragraph (c) to read as set forth at the end of the common preamble.

§ 38.153 [Amended]

3. Section 38.153 is amended by revising paragraphs (b) and (c), and by adding paragraph (d) to read as set forth at the end of the common preamble.

§ 38.157 [Amended]

4. Section 38.157 is amended by revising paragraph (b) to read as set forth at the end of the common preamble.

§ 38.159 [Revised]

5. Section 38.159 is revised to read as set forth at the end of the common preamble.

38.161 [Added]

6. Section 38.161 is added to subpart G to read as set forth at the end of the common preamble.

7. A heading is added at the end of part 38 preceding the figures to read as set forth at the end of the common preamble.

Dated: March 19, 1998.

Rodney E. Slater,

Secretary of Transportation.

[FR Doc. 98–7687 Filed 3–20–98; 11:24 am]

BILLING CODE 8150–01–P, 4910–62–P

federal register

Wednesday
March 25, 1998

Part V

Office of Personnel Management

Science and Technology Laboratory Personnel Management Demonstration Project Final Plan: U.S. Army Engineer Waterways Experiment Station (WES), Vicksburg, MS; Notice; Republication

OFFICE OF PERSONNEL MANAGEMENT

Science and Technology Laboratory Personnel Management Demonstration Project; Department of the Army, U.S. Army Engineer Waterways Experiment Station (WES), Vicksburg, MS; Correction and Republication

Editorial Note: FR Doc. 98–5425 was originally published at page 10464 in the issue of Tuesday, March 3, 1998. The corrected document is republished below in its entirety.

AGENCY: Office of Personnel Management.

ACTION: Notice of approval of demonstration project final plan.

SUMMARY: 5 U.S.C. 4703 authorizes the Office of Personnel Management (OPM) to conduct demonstration projects that experiment with new and different personnel management concepts to determine whether such changes in personnel policy or procedures would result in improved Federal personnel management.

Public Law 103–337, October 5, 1994, permits the Department of Defense (DoD), with the approval of the OPM, to carry out personnel demonstration projects generally similar to the China Lake demonstration project at DoD Science and Technology (S&T) Reinvention Laboratories. The Army will implement demonstration projects initially to cover five of its S&T Reinvention Laboratories: The Army Research Laboratory; the Army Missile Research, Development, and Engineering Center; the Army Aviation Research and Development Center; the Army Medical Research and Materiel Command; and the Army Engineer Waterways Experiment Station. This plan is for the Army Engineer Waterways Experiment Station (WES).

DATES: This demonstration project will be implemented at WES beginning on September 13, 1998.

FOR FURTHER INFORMATION CONTACT: *WES:* Dr. C.H. Pennington, U.S. Army Engineer Waterways Experiment Station, ATTN: CEWES–ZT–E, 3909 Halls Ferry Road, Vicksburg, Mississippi 39180–6199, phone 601–634–3549. *OPM:* Fidelma A. Donahue, U.S. Office of Personnel Management, 1900 E Street, NW, Room 7460, Washington, DC 20415, phone 202–606–1138.

SUPPLEMENTARY INFORMATION:

1. Background

Since 1966, at least 19 studies of DoD laboratories have been conducted on laboratory quality and personnel. Almost all of these studies have recommended improvements in civilian personnel policy, organization, and management. The WES Personnel Management Demonstration Project involves simplified job classifications, pay banding, a performance-based compensation system, streamlined hiring processes, and modified Reduction-in-Force (RIF) procedures.

2. Overview

On March 15, 1997, [62 FR 12006] OPM published this proposed demonstration plan and received thirty-nine letters and eight individuals commented on the proposed plan at the Public Hearing. These comments brought several new perspectives to the attention of those responsible for implementing, overseeing, and evaluating the project. The comments highlighted instances of miscommunication and misunderstanding with the present system as well as the project interventions. Further, they underscored the importance of providing training to employees and supervisors on the demonstration project. The substance of all comments received has been conveyed to the WES Director, Commander and Deputy Director, and the Laboratory Directors in the event that local policies, processes, and training sessions may benefit from such perspectives. A summary of all comments received, along with accompanying responses, is provided below.

A. General Management Issues

Comments: Seventeen comments were in support of the project as a way to provide incentives for promising young people to stay in the Federal Government. Seven were opposed to the project, others were opposed to some of the provisions in the project, and two recommend coverage of engineers and scientists only. Many other comments were made that addressed the organizational environment at WES. Several comments expressed concern over a demonstration project which provides additional flexibility to supervisors and suggested that these flexibilities will allow for or promote abuses and compromises of the merit system. With the feeling that many supervisors currently do not properly execute supervisory responsibilities or utilize the authority and tools provided under the current system, these employees fear a new system that gives supervisors additional flexibility over their career and pay. Several comments mentioned that no checks or oversight seem apparent and that management accountability is lacking under the Project.

Response: It has been the intent of WES from the inception of the Personnel Management Demonstration Project to include the total workforce in a broadbanding performance-based personnel management system, not just the engineers and scientists. Internal equity, organizational cohesiveness based on a common performance management philosophy, and administrative efficiency are reasons WES included the entire workforce in the project. WES acknowledges that the project provides increased authority and responsibility to supervisors, particularly in those areas impacting employees' pay. Experience with other personnel demonstration projects, including the China Lake project, does not support the assumption that increased supervisory discretion and authority leads to merit system abuses. However, WES is sensitive to the concerns expressed by many of the comments and is committed to holding supervisors accountable for the proper use of increased authorities and flexibilities. To assist supervisors in carrying out their new responsibilities, the Personnel Management Demonstration Project currently requires that supervisors be trained on the new system and receive feedback from a number of sources. Aggregate data from the feedback process will be made available to the top management at WES and will be used to monitor and identify further supervisory development and training needs. Project oversight will be achieved by an executive steering committee, co-chaired by the Assistant Secretary of the Army for Research and Technology and the Deputy Assistant Secretary of the Army, Civilian Personnel Policy. Additionally, extensive independent evaluations of the demonstration project will be conducted by OPM's Personnel Resources and Development Center over the first five years of the project. The results of these evaluations will provide WES with information as to whether specific provisions of the project need to be modified, continued as is, or curtailed.

B. Occupational Family and Broadbands

Comments received on this aspect of the Personnel Management Demonstration Project were related to two subtopics; broadbanding and assignment of job series to occupational families.

(1) Broadbanding

(a) *Comment:* Four individuals expressed concern about the proposed broadbanding structure in the Engineers and Scientists occupational family. Two recommended that grades GS–12 through GS–14 be included in one pay band since this was in the original WES proposal. One recommended one pay band covering GS–11 through GS–15. The other recommended that GS–13s, GS–14s, and GS–15s be placed in separate pay bands. Concerns presented included: GS–12s at WES consistently work at the GS–13 or GS–14 level; there is a glass ceiling for GS–12s; GS–12s are lower than others serving on national and international committees; expectations of wholesale transfer of GS–12s which will be a loss to the community; retention problems; costs of retraining new recruits; and concerns about ethical dilemmas when raters and ratees are in the same pay band.

Response: WES recognizes there is a concern over the lack of progression opportunities from GS–12 to GS–13 under the present system and the desirability of establishing a pay band that would remove promotion barriers and allow progression to a level of pay equivalent to the GS–14 level. This is evident in the turnover of engineer and science employees at the GS–12 level, which is the highest at WES. A proposal was included in the first WES plan to address these issues and to experiment with a GS–12 through GS–14 pay band for engineers and scientists performing research, testing and evaluation, and experimental development functions. Based on these comments and those presented during the project development process, the pay banding scheme for the Engineers and Scientists occupational family has been revised to recognize a pay band covering GS–12 through GS–14. The issue of raters and ratees in the same band was considered to be comparable to rating levels under the present system whereby person-in-job positions are frequently at or above the level of their raters. This is not viewed as a potential problem.

(b) *Comment:* One commentor recommended that separate occupational families, pay bands, and pay pools be established for both legal and contracting personnel.

Response: WES currently has 3 attorneys and 13 GS–1102 contracting employees. The creation of separate occupational families and pay bands for each professional group is impractical, would require an inordinate amount of time to manage, and the pay pools would be too small to provide substantial financial rewards to recognize exceptional performance. The legal and contracting occupations will continue to be included in the Administrative occupational family.

(c) *Comment:* One commentor stated that ''the ratio of possible pay increases caused by the banding is highly favorable to the white male while the minorities, especially African Americans and females, will find themselves locked in the lower paying bands.''

Response: The pay banding schemes were developed by a committee comprised of labor, management, professional, clerical, technical, wage grade, African American, white, male, and female employees. Pay band considerations included the nature of work (professional, nonprofessional, technical, support, etc.), normal level of work, and normal career progression of employees within the various occupational families. The results reflect progression from entry level trainee, to intern to developmental, to journeyman, to advanced journeyman, to expert, to managerial level. No positions were designated to bands based on non-merit factors such as race, sex, national origin, or any other personal considerations of incumbents. Additionally, experience of the China Lake Project shows that broadbanding does not discriminate based on race, sex, national origin or any other personal considerations. To assist WES in monitoring this important issue, data on band level salary, and workforce demographics, supplemented by perceptual data, are included in the planned evaluation strategy. Evaluation results will alert WES of any unintended outcomes and will serve as the basis for decisions to modify the project.

(d) *Comment:* One employee voiced concern about the potential problem of applying for a job in another agency if they were at pay band IV in the Engineers and Scientists occupational family and the desired job was GS–15. The employee was concerned about how the agency would know their comparable grade level.

Response: The project includes a provision for conversion out of the project to the General Schedule pay system. In instances such as this, employees will be encouraged to ask prospective employers to contact the employee's servicing Human Resources Management (HRM) Office for comparable grades, etc., in order to make qualifications determinations.

(2) Assignment of Job Series to Occupational Families

Comments: Three comments were submitted raising concern about the identification of job series to occupational families. These comments were related to the assignment of GS–0544, Civilian Pay Technician, and GS–1106, Procurement Clerk, positions to the General Support occupational family.

Response: The occupational families selected for the WES Personnel Management Demonstration Project group positions by job series under one of four occupational families: Engineers and Scientists; E&S Technicians; Administrative; and General Support. Each occupational family covers occupations similarly treated in regard to type of work, typical career progression, and qualification requirements. Using these criteria, positions designated as Civilian Pay Technician, GS–0544, and Procurement Clerk, GS–1106, are assigned to the General Support occupational family.

C. Performance Evaluation

Comment: One commentor had three concerns about the performance evaluation system that will be used by this project. The commentor recommended that a pass/fail system be adopted, three performance elements be added to the appraisal, and the employee-to-supervisor ratio of about 15:1 be waived.

Response: Several performance evaluation options including a pass/fail system were considered during project development. While pass/fail is a viable option, a system that rates an employee's performance on a scale from 0 to 5 was adopted. The latter is believed to be more compatible for converting performance ratings or scores to pay-for-performance. The recommended three additional performance elements (empowers his/her personnel, acquisition streamlining initiatives, and support to the organization) will not be added since they are considered to be embedded within the seven non-supervisory performance elements or the two supervisory performance elements. The plan contains no requirements for changing the employee-to-supervisor ratio.

D. Supervisory Pay Adjustments and Supervisory Pay Differentials

Comments: Eight comments were received (one was signed by seven individuals) regarding the proposal to allow supervisory pay adjustments and differentials for supervisors in the

Engineers and Scientists occupational family. One was in support of supervisory pay adjustments and differentials. One recommended that supervisory pay adjustments be applied equally to all engineers and scientists supervisors rather than be variable. One commentor recommended that adjustments and differentials be made available to all supervisors regardless of occupational family assignment. One recommended that supervisory pay adjustments be allowed to exceed the pay band maximum pay and considered as basic pay. The others recommended that the proposal to allow these adjustments and differentials be withdrawn. Reasons given included supervisory skills are supporting elements that are not specific to mission and are generic tasks, supervisory work force is stable, proposed plan simplifies the work of supervisors, increased pay for supervisors will penalize direct-mission skills, and the plan should reward individual performance not the position.

Response: The proposal to allow supervisory pay adjustments was to attract and reward the best individuals for supervisory positions, recognize the increased burden placed on engineers and scientists supervisors, and to compensate supervisors who supervise employees that are typically at the same grade level or higher. The supervisory pay adjustment will allow an increase in pay for new supervisors who lateral from a nonsupervisory position to a supervisory position within the same pay band, i.e., pay band IV or V. This adjustment is not automatic and may be varied based on a supervisor's performance, up to a maximum of 10 percent. Supervisory pay differentials are included in order to recognize pay for performance for supervisors who have reached the maximum pay for their pay band. This extension of pay will be given and adjusted based on their actual performance and the differential will not be treated as basic pay. Supervisory adjustments and differentials were not made available to supervisors in other occupational families since most supervise employees in lower pay bands.

E. Distinguished Scholastic Achievement Appointment

Comments: Eighteen individuals identified a need to modify the Personnel Management Demonstration Project to include an initiative that was in the original WES proposal, the establishment of a Distinguished Scholastic Achievement Appointment which provides the authority to appoint undergraduates and graduates with outstanding scholastic records to positions in the Engineers and Scientists occupational family.

Response: 5 U.S.C. 4703 states that before a personnel demonstration project is conducted, a plan shall be developed which identifies the methodology of the project. The plan must be published in the **Federal Register** and submitted as published to public hearings. New initiatives or substantive changes to a proposed personnel demonstration project are not permitted without being submitted to public hearing. The Distinguished Scholastic Achievement Appointment is considered to be a new initiative and has not been the subject of a public hearing. Therefore, the Distinguished Scholastic Achievement Appointment will not be included as part of the WES Personnel Management Demonstration Project at this time. However, WES management intends to submit the Distinguished Scholastic Achievement Appointment as a personnel initiative at the appropriate time in the future.

F. Voluntary Emeritus Program

Comment: One person suggested that the Voluntary Emeritus Program be made available to retired or separated individuals regardless of occupational family.

Response: The national prominence earned by researchers at WES results from their unparalleled engineering and scientific achievements. Many of the retired engineers and scientists continue to be leaders in their professions and the Voluntary Emeritus Program allows them the opportunity to assist WES in solving problems of importance to the nation in broad areas of civil engineering and environmental quality. This intervention will be retained as written and will be monitored through the evaluation process to determine whether it should be expanded to other occupational families.

G. Conversion Buy-In

Comments: Seven commentors were concerned that, at the time of conversion, employees would be given a lump sum cash payment rather than adjusting base salary for time credited toward what would have been the employee's next within-grade increase. All believe that a one-time payment equal to an employee's time vested in their current grade step takes away from the employee's future earnings.

Response: WES has modified the conversion procedure so that, at the time of conversion into the project, each employee will have their basic pay adjusted for time credited toward what would have been the employee's next within-grade increase.

H. Reduction-In-Force (RIF)

Comments: Five commentors were concerned with the revised RIF procedures that place greater emphasis on performance when establishing retention registers. Two commentors viewed the revised procedures as unfair since performance scores are not used to adjust the service computation date; one commentor was concerned about veterans' preference issues; one commentor did not believe that competitive areas should be defined as the occupational family; and the other commentor saw no need to change current RIF procedures.

Response: The current RIF system is complicated, costly, and relatively unresponsive to the needs of the organization. WES believes that flexible and responsive alternatives are needed that place greater emphasis on performance while preserving the guiding principles of veterans' preference laws. The revised RIF procedures will disrupt the organization the least and will increase the probability of retaining the highest performing individuals. Under the Project, employees will retain rights and protections during RIF. At the same time, one goal of the Project is to expand the role of performance in various aspects of employment. For this reason, the Project does not use performance scores to adjust the service computation date (SCD), as one commentor suggested. The Project instead emphasizes performance by using the most recent employee performance score as a separate element in the order of retention during RIF and by giving that score priority over the service computation date in determining the order of retention. Retention standing will be based upon the following factors, listed in order of priority: tenure, veterans' preference, most recent employee performance score, and SCD. The role of veterans' preference remains unchanged from the current system. Finally, competitive areas have been modified to make each of the four occupational families a separate competitive area. All positions in a given occupational family, regardless of their geographic locations, will fall within a single competitive area.

3. Demonstration Project System Changes

Minor editorial changes were made to correct the final version of the Project. In addition, pertinent sections of the final plan have been modified to include: a pay band in the Engineers

and Scientists occupational family that combines GS 12–14 positions (Section III, A, Broadbanding); and an adjustment of basic pay for the time credited toward the employee's next within-grade increase at the time of conversion into the project (Section V, A, Conversion to the Demonstration Project).

Dated: February 26, 1998.

Office of Personnel Management.

Janice R. Lachance,

Director.

Table of Contents

I. Executive Summary
II. Introduction
A. Purpose
B. Problems with the Present System
C. Changes Required and Expected Benefits
D. Participating Organization
E. Participating Employees
F. Project Design
III. Personnel System Changes
A. Broadbanding
B. Classification
C. Pay for Performance
D. Pay Setting Provisions
E. Hiring and Placement Authorities
F. Employee Development
G. Reduction in Pay or Removal Actions
H. Revised Reduction-In-Force (RIF) Procedures
IV. Training
A. Supervisors
B. Administrative Staff
C. Employees
V. Conversion
A. Conversion to the Demonstration Project
B. Conversion from the Demonstration Project
VI. Project Duration
VII. Evaluation Plan
VIII. Demonstration Project Costs
IX. Required Waivers to Law and Regulations
A. Waivers to Title 5, U.S. Code
B. Waivers to Title 5, Code of Federal Regulations
Appendix A: Intervention Impact Model: Project Evaluation

I. Executive Summary

The Department of the Army (DA) will establish Personnel Demonstration Projects generally similar to the system currently in use at the Navy Personnel Demonstration Project known as China Lake. The Personnel Demonstration Projects will be developed to be in-house budget neutral, based on a baseline of September 1995 in-house costs and consistent with the DA plan to downsize the DA laboratories and research and development centers. An in-house budget is a compilation of costs of the many diverse components required to fund the day-to-day operations of a laboratory. These components generally include pay of people (labor, benefits, overtime, awards), training, travel, supplies, non-capital equipment, and other costs depending on the specific function of the activity.

This project was designed by the Assistant Secretary of the Army for Research, Development and Acquisition with the support of the Assistant Secretary of the Army for Civil Works, and the participation of five Army S&T Reinvention Laboratories. Review was provided by the US Army Corps of Engineers, DA, DoD, and OPM. Phases of the project that address non-Title 5 issues began as early as 1 October 1995, with implementation of Title 5 initiatives to begin no earlier than June 3, 1998.

This project is built upon the concepts of linking performance to pay for all covered positions, simplifying paperwork in the processing of classification and other personnel actions, emphasizing partnerships among management, employees, and unions, and delegating other authorities to line managers.

II. Introduction

A. Purpose

The quality of DoD laboratories, their people, and products has been under intense scrutiny in recent years. The perceived deterioration of laboratory quality is due, in substantial part, to the erosion of control which line managers have over their human resources. This demonstration, in its entirety, attempts to provide managers, at the lowest practical level, the authority, control, and flexibility needed to achieve quality laboratories and quality products. The purposes of the demonstration project are to: Improve the hiring process and allow WES to compete more effectively for high-quality personnel; motivate and retain staff through pay for performance, sabbaticals, and a more responsive personnel system; strengthen the manager's role in personnel management through increased delegation of personnel authorities; increase the efficiency of the personnel system by simplifying the classification system through broadbanding and reduction of guidelines, steps, and paperwork; and create a model that could be adopted by other government agencies.

This project will be under the joint sponsorship of the Assistant Secretary of the Army for Research, Development and Acquisition and the Assistant Secretary of the Army for Manpower and Reserve Affairs. The MACOM Commander will execute and manage the project.

Project oversight will be achieved by an executive steering committee made up of top-level executives, co-chaired by the Deputy Assistant Secretary of the Army for Research and Technology and the Deputy Assistant Secretary of the Army (Civilian Personnel Policy). Oversight external to the Army will be provided by DoD and OPM.

B. Problems With the Present System

The civilian personnel system currently in use at DoD laboratories has several major inefficiencies, which hinder management's ability to recruit and retain the best qualified personnel. Line managers have only limited flexibility to administer personnel resources, and existing personnel regulations are often in conflict with line management's ability to perform world-class research. Laboratory managers are frustrated in their attempts to hire the best and brightest engineers and scientists.

The classification system requires lengthy, narrative, individual position descriptions, which have to be classified by the use of complex and often outdated position classification standards. The system causes delays in recruiting, reassigning, promoting, and removing employees. Rewarding or taking a performance based action requires inordinate paperwork and time, often discouraging managers from pursuing critical actions. Few incentives, with limited flexibility, exist for managers to deal with all levels of the workforce, and pay is not always commensurate with an employee's performance. The current RIF system does not adequately recognize performance as a major criterion in RIF situations. The RIF rules are complex, and difficult to understand and administer. The RIF process disrupts operations, due to displacement of employees within their competitive levels and in the exercise of bumping and retreat rights.

C. Changes Required and Expected Benefits

This project is expected to demonstrate that a human resource management system tailored to the mission and need of WES will result in: Increased quality in the engineering and science workforce and the laboratory products they produce; increased timeliness of key personnel processes; trended workforce data that reveals increased retention of excellent contributors and separation rates of poor contributors; and increased customer satisfaction with the laboratory and its products by customers serviced.

This demonstration program builds on the successful features of demonstration projects at China Lake and the National Institute of Standards

and Technology (NIST). These demonstration projects have produced impressive statistics on job satisfaction of their employees versus that for the federal workforce in general. This demonstration expects similar successes. A full range of data will be collected to evaluate the project (and is described in Section VII, Evaluation Plan).

D. Participating Organization

U.S. Army Engineer Waterways Experiment Station, 3909 Halls Ferry Road, Vicksburg, Mississippi 39180–6199. Employees assigned to WES work at the locations shown in Table 1.

TABLE 1.—DUTY LOCATIONS

Location	Total No. of employees
London, England	1
Berkeley, CA	1
Mobile, AL	3
Washington, DC	1
Fayette, NC	1
Natchez, MS	1
Vicksburg, MS	1,312
Duck, NC	10
Calhoun Falls, SC	2
Lewisville, TX	3
North Bonneville, WA	3
Dallesport, WA	1
Spring Valley, WI	2
Omaha, NE	56

E. Participating Employees

The project will cover all General Schedule (GS) employees assigned to WES. Federal Wage System (FWS) employees, Civilian Intelligence Personnel Management System (CIPMS) employees covered by Title 10, and 5 U.S.C. 3105 Scientific and Technical (ST) employees are not covered, but will follow the same employee development provisions of this plan, except, in the case of CIPMS employees, where the provisions are found to be in conflict with CIPMS. The occupational series of employees included in the project are identified by occupational family in Table 2. All GS employees with appointments exceeding one year will be covered by the provisions of this project. GS employees with appointments limited to one year or less will be covered for pay banding, the performance appraisal process, and salary adjustments. Senior Executive Service (SES) employees will not be included in the project. It is the intent of WES to expand coverage of the project to all FWS employees 1 to 2 years following the date of implementation. In the event of expansion to FWS employees beyond the employee development provisions, full approval will be obtained from DA, DoD, and OPM.

The American Federation of Government Employees (AFGE) represents approximately 500 GS and FWS employees at WES. The AFGE represents most E&S Technicians; most Administrative employees; all General Support employees except fire protection inspectors, security guards, student trainees, and those designated as confidential employees; and all nonsupervisory FWS employees. WES plans to implement this project on September 13, 1998. Bargaining unit employees will be included in the project at that time if Impact and Implementation bargaining is complete. If Impact and Implementation bargaining has not been completed on the date of project implementation, employees represented by AFGE Local 3310 may not be brought into the project until completion of the bargaining process. AFGE Local 3310 has been involved with and participated in the development of the project since its inception. WES will continue to fulfill its obligation to consult or negotiate with the AFGE, as appropriate, in accordance with 5 U.S.C. 4703 (f) and 7117. The participation with the AFGE is within the spirit and intent of Executive Order 12871.

TABLE 2.—OCCUPATIONAL SERIES INCLUDED IN THE DEMONSTRATION PROJECT

Engineers & Scientists	
0023	Outdoor Recreation Planner
0150	Geographer
0193	Archeologist
0401	Biologist
0403	Microbiologist
0408	Ecologist
0410	Zoologist
0414	Entomologist
0430	Botanist
0434	Plant Pathologist
0435	Plant Physiologist
0470	Soil Scientist
0471	Agronomist
0482	Fishery Biologist
0486	Wildlife Biologist
0499	Student Trainee
0690	Industrial Hygienist
0801	General Engineer
0803	Safety Engineer
0806	Materials Engineer
0807	Landscape Architecture
0808	Architecture
0810	Civil/Hydraulic/Structural Engineer
0819	Environmental Engineer
0830	Mechanical Engineer
0850	Electrical Engineer
0854	Computer Engineer
0855	Electronics Engineer
0893	Chemical Engineer
0896	Industrial Engineer
0899	Student Trainee

TABLE 2.—OCCUPATIONAL SERIES INCLUDED IN THE DEMONSTRATION PROJECT—Continued

1301	Physical Scientist
1310	Physicist
1313	Geophysicist
1315	Hydrologist
1320	Chemist
1350	Geologist
1360	Oceanographer
1399	Student Trainee
1515	Operations Research Analyst
1520	Mathematician
1530	Statistician
1550	Computer Scientist
1599	Student Trainee
E&S Technicians	
0028	Environmental Protection Specialist
0802	Engineering Technician
0818	Engineering Draftsman
0856	Electronics Technician
1311	Physical Science Technician
1371	Cartographic Technician
1521	Mathematics Technician
1670	Equipment Specialist
Administrative	
0018	Safety & Occupational Health Specialist
0099	Student Trainee
0260	Equal Employment Opportunity Specialist
0301	Info Syst Mgr Spec/Joint Test Prog Mgt Coordinator/Emergency Oper Mgr
0334	Computer Specialist
0341	Administrative Officer
0343	Mgt & Prog Analysis Officer
0346	Logistics Management Officer
0391	Telecommunications Officer
0399	Student Trainee
0505	Financial Manager
0510	Accountant
0511	Auditor
0560	Budget Officer
0599	Student Trainee
0610	Nurse
0905	General Attorney
0950	Paralegal Specialist
1020	Illustrator
1035	Public Affairs Specialist
1060	Photographer
1071	Audiovisual Specialist
1082	Editor
1084	Visual Information Specialist
1102	Contract Specialist
1104	Property Disposal Specialist
1199	Student Trainee
1410	Librarian
1412	Technical Information Specialist
1499	Student Trainee
1712	Training Instructor
2001	General Supply Specialist
2101	Transportation Specialist
General Support	
0019	Safety Technician
0081	Firefighter
0085	Security Guard
0090	Guide
0099	Student Trainee
0302	Messenger
0303	Clerk
0305	Mail & File Clerk
0312	Clerk-Stenographer

TABLE 2.—OCCUPATIONAL SERIES INCLUDED IN THE DEMONSTRATION PROJECT—Continued

0318	Secretary
0322	Clerk-Typist
0326	Office Automation Clerk
0332	Computer Operator
0335	Computer Clerk
0344	Management Assistant
0361	Equal Employment Opportunity Assistant
0394	Communications Clerk
0503	Financial Clerk & Assistant
0525	Accounting Technician
0530	Cash Processing Technician
0540	Civilian Pay Technician
0544	Teller
0561	Budget Clerk
0986	Legal Clerk
1105	Purchasing Clerk
1106	Procurement Clerk
1107	Property Disposal Clerk
1411	Library Technician
2005	Supply Clerk
2102	Transportation Clerk
2131	Freight Rate Specialist

F. Project Design

In August 1994, a Project Manager was appointed to lead the WES reinvention effort. The Project Manager was assisted by a representative of the servicing HRM Office. During October-November 1994, a WES concept plan was developed to map out desired areas in which to propose changes in the personnel system. The concept plan was then merged into a single Army plan for the participating Army S&T Laboratories and was submitted to the DA in December 1994.

WES formed four teams in January 1995 to develop specific initiatives to be undertaken in the WES demonstration project. The teams were composed of 7 to 14 employees each and included representatives from management, engineers, scientists, technicians, clerical, administrative, wage grade, human resources, and representatives from the local union. The teams developed human resources management initiatives which were designed to: assist in hiring the best people to accomplish the mission; improve training and development of the workforce; improve and simplify the position classification process; develop a broadband system to facilitate classification and career progression; and develop a pay for performance system to recognize employee contributions to mission accomplishment.

The Army's plan was reviewed concurrently by DoD and OPM in April 1996. It was recommended that each Army lab submit individual project plans. The second joint review by DoD and OPM of the lab plans was conducted in September 1996. The philosophy and intent of WES throughout the process of project development was the inclusion of its total workforce. As such, a pay-for-performance broadbanding system was developed for FWS employees, in partnership with representation from the bargaining unit, and was included as part of the WES plan. At the joint reviews, the DoD Civilian Personnel Management Service and OPM's Office of Classification and Office of Compensation Policy considered the broadbanding of FWS employees as outlined in the WES plan to be inappropriate. FWS employees were removed from the plan but will follow the same employee development provisions of this plan. Options for including them in a pay-for-performance system at a later date will be developed by WES, DA, DoD, and OPM.

This plan and these initiatives are the result of many months of effort by dedicated participants at WES, U.S. Army Corps of Engineers, DA, DoD, and OPM levels.

III. Personnel System Changes

A. Broadbanding

1. Pay Bands

Each occupational family will be composed of discrete pay bands corresponding to recognized career advancement within the occupations. The pay bands will replace grades. The pay bands will not be the same for all occupational families. Each occupational family will be divided into four to six pay bands, each pay band covering the same pay range now covered by one or more grades. The minimum rate of basic pay for a band will be the minimum rate for the lower grade in the band as shown on the regular GS schedule. The maximum rate of basic pay for a pay band will be the highest regular schedule GS rate possible for positions within that occupational family and pay band. A salary overlap, similar to the current overlap between GS grades, will be maintained.

Ordinarily an individual will be hired at the lowest salary in a pay band. Exceptional qualifications, specific organizational requirements, or other compelling reasons may lead to a higher entrance salary within a pay band.

The proposed pay bands for the occupational families and how they relate to the current GS grades are shown in Table 3. This pay band concept has the following advantages because it: reduces the number of classification decisions required during an employee's career; simplifies the classification decision-making process and paperwork; supports delegation of classification authority to line managers; provides a broader range of performance-related pay for each pay band; and prevents the progression of low performers through a pay band by mere longevity, since job performance serves as the basis for determining pay.

The WES pay banding plan expands the pay banding concept used at China Lake and NIST by creating pay band VI of the Engineers and Scientists occupational family. This pay band is designed for Senior Scientific Technical Managers.

Current legal definitions of Senior Executive Service (SES) and ST positions do not fully meet the needs of WES. The SES designation is appropriate for executive level managerial positions whose classification exceeds the GS–15 grade level. The primary knowledge and abilities of SES positions relate to supervisory and managerial responsibilities. Positions classified as ST are reserved for bench research scientists and engineers; these positions require a very high level of technical expertise and they have little or no supervisory responsibility.

TABLE 3. - OCCUPATIONAL FAMILIES AND PAY BANDS

Occupational Families	Pay Bands															
Engineers and Scientists (E&S)*	I (N)			II (N)							III (E)		IV (E)		V (E)	VI (E)
E&S Technicians	I (N)			II (N)			III (N)				IV (E)					
Administrative	I (N)			II (N)							III (E)		IV (E)		V (E)	
General Support	I (N)			II (N)		III (N)		IV (E)								
Corresponding GS Grades	1	2	3	4	5	6	7	8	9	10	11	12	13	14	15	Above 15

* Engineers and Scientists pay band II includes a mix of positions: positions equivalent to GS-5 through 10 involve research, test, evaluation, and equipment development work as well as non-research work; positions equivalent to GS-11 involve research work. Pay band III includes non-research positions, e.g., engineers in public works. Pay band IV positions equivalent to GS-12 through GS-14 involve research work; the balance of band IV includes a mix of research and non-research supervisory positions, and program managers.

FLSA Codes: N = Nonexempt; E = Exempt. Although typical exemption status under the various pay bands is shown, actual FLSA exemption status determinations are made on a case-by-case basis.

WES currently has a few positions which typically have characteristics of both SES and ST classifications. Most of these positions are responsible for supervising other GS–15 positions, including branch or division chiefs, non-supervisory research engineers and scientists, and potential ST positions. These positions are classified at the GS–15 level, although their technical expertise warrants classification beyond GS–15. Because of their management responsibility, these individuals are excluded from the ST system.

Because of management considerations, they cannot be placed in the SES. WES management considers the primary requirement for the positions to be knowledge of and expertise in the specific scientific and technology areas related to the mission of the organization. Historically, incumbents of these positions have been recognized within the community as scientific and engineering leaders, who possess primarily scientific/engineering credentials and are considered experts in their field. However, they must also possess strong managerial and supervisory abilities. Therefore, although some of these employees have scientific credentials that might compare favorably with ST criteria, classification of these positions as STS is not an option, because the managerial and supervisory responsibilities inherent in the positions cannot be ignored.

The purpose of pay band VI (which will reinforce the equal pay for equal work principle) is to solve a critical classification problem. It will also contribute to an SES ''corporate culture'' by excluding from the SES positions for which technical expertise is paramount. Payband VI proposes to overcome the difficulties identified above by creating a new category of positions—the Senior Scientific Technical Manager, which has both scientific/technical expertise and full managerial and supervisory authority.

Current GS–15s will convert into the demonstration project at pay band V. After conversion they will be reviewed against established criteria to determine if they should be reclassified to pay band VI. Other positions possibly meeting criteria for classification to pay band VI will be reviewed on a case-by-case basis. The proposed salary range is a minimum of 120 percent of the minimum rate of basic pay for GS–15 with a maximum rate of basic pay established at the rate of basic pay (excluding locality pay) for SES level 4 (ES–4). Vacant positions in pay band VI will be competitively filled to ensure that selectees are preeminent researchers and technical leaders in the specialty fields who also possess substantial managerial and supervisory abilities.

Selection panels will be created to assist in filling Payband VI positions. Panel members will be selected from a pool of current WES SES members, ST employees, and later those in Payband

VI, and an equal number of individuals of equivalent stature from outside the laboratory to ensure impartiality, breadth of technical expertise, and a rigorous and demanding review. The panel will apply criteria developed largely from the current OPM Research Grade Evaluation Guide for positions exceeding the GS–15 level.

DoD will test the establishment of pay band VI for a 5-year period. Positions established in pay band VI will be subject to limitations imposed by OPM and DoD. Pay band VI positions will be established only in an S&T Reinvention Laboratory which employs scientists, engineers, or both. Incumbents of pay band VI positions will work primarily in their professional capacity on basic or applied research and secondarily perform managerial or supervisory duties. The number of pay band VI positions within DoD will not exceed 40. These 40 positions will be allocated by ASD (FMP), DoD, and administered by the respective Services. The number of pay band VI positions will be reviewed periodically to determine appropriate position requirements. Pay band VI position allocations will be managed separately from SES, ST, and Senior Level (SL) positions. An evaluation of the pay band VI concept will be performed during the fifth year of the demonstration project.

The final component of pay band VI is the management of all pay band VI assets. Specifically, this authority will be exercised at the DA level and includes the following: authority to classify, create or abolish positions within the limitations imposed by OPM and DoD; recruit and reassign employees in this pay band; set pay and to have their performance appraised under this project's pay-for-performance system. The laboratory wants to demonstrate increased effectiveness by gaining greater managerial control and authority, consistent with merit, affirmative action, and equal employment opportunity principles.

2. Occupational Families

Positions will be grouped into occupational families according to similarities in type of work and customary requirements for formal training or credentials. The historical patterns of advancement within the occupational families will be considered. The current positions and grades at WES have been examined, and their characteristics and distribution have served as guidelines in the development of occupational families. Four occupational families will be established:

(a) Engineers and Scientists. This occupational family includes all technical professional positions such as engineers (civil, hydraulic, structural, mechanical, electronic, electrical, chemical, and environmental), mathematicians, statisticians, computer scientists, outdoor recreational planners, geographers, architects, archaeologists, operations research analysts, and a variety of physical and biological scientists. Specific course work or educational degrees are required for positions in this occupational family.

(b) E&S Technicians. This occupational family consists of the positions that support the various engineering and scientific activities. Employees in this occupational family are required to have training and skills in the various technical areas (civil, hydraulic, structural, geotechnical, physical, coastal, biological, chemical).

(c) Administrative. This occupational family contains specialized functions in such fields as counsel, audit, finance, procurement, public information, accounting, administrative, computing, safety, and management analysis. Special training and skills in administrative fields or special degrees are required.

(d) General Support. This occupational family is composed of positions requiring special skills and knowledge, such as typing or shorthand, and job-related experience. Clerical work usually involves the processing and maintenance of records. Assistant work requires knowledge of methods and procedures within a specific administrative area. Other support functions include the work of secretaries, legal clerks, guards, mail clerks, etc.

3. Fair Labor Standards Act

Fair Labor Standards Act (FLSA) exemption and nonexemption determinations will be made consistent with criteria found in 5 CFR part 551. All employees are covered by the FLSA unless they meet the executive, administrative, or professional criteria for exemption. As a general rule, the FLSA status can generally be matched to the occupational families and pay bands found in Table 3. Exceptions to these guidelines include supervisors/managers who meet the definitions outlined in the OPM General Schedule Supervisory Guide. The generic position descriptions will not be the sole basis for the FLSA determination. Each position will be evaluated on a case by case basis by comparing the duties and responsibilities assigned, the classification standards for each pay band, under 5 CFR part 551 criteria.

B. Classification

1. Coverage

The present GS classification system has over 400 occupations (also called series), which are divided into 22 groups. The present occupational series will be maintained. New series may be added as needed to reflect new occupations in the work force when established by OPM.

2. Classification Standards

The classification system will be modified to facilitate pay banding. The present classification standards will be used to create local benchmark position description/standards for each pay band, reflecting duties and responsibilities comparable to those described in present classification standards for the span of grades represented by each pay band. Present titles and series will continue to be used in order to recognize the types of work being performed and educational backgrounds and requirements of incumbents. Locally developed specialty codes and OPM functional codes will be used to facilitate titling, making qualification determinations, and assigning competitive levels to determine retention status.

3. Position Descriptions and Classification Process

New standardized position descriptors will be developed to assist managers in exercising delegated position classification authority. Managers will identify the appropriate pay band and descriptor definition and proceed to finalize the position description. A cover sheet similar to the present DA Form 374 will be used to reflect their classification decision. The cover sheet used will include a provision for designating specialty codes. These specialty codes will be developed to identify the special nature of work performed and will be included on the final position descriptor.

An employee may appeal the occupational series or pay band level of his or her position at any time. An employee must formally raise the areas of concern to supervisors in the immediate chain of command, either verbally or in writing. If an employee is not satisfied with the supervisory response, he or she may then appeal to the DoD appellate level. If an employee is not satisfied with the DoD response, he or she may then appeal to OPM only after DoD has rendered a decision under the provisions of this demonstration

project. Appellate decisions from OPM are final and binding on all administrative, certifying, payroll, disbursing, and accounting officials of the Government. Time periods for case processing under Title 5 apply. An employee requesting a classification decision that would exceed the equivalent of a GS–15 level may not submit the appeal to OPM.

An employee may not appeal the accuracy of the position description, the demonstration project classification criteria, or the pay-setting criteria; the assignment of occupational series to the occupational family; the propriety of a salary schedule; or matters grievable under an administrative or negotiated grievance procedure or an alternative dispute resolution procedure.

The evaluation of classification appeals under this demonstration project are based upon the demonstration project classification criteria. Case files will be forwarded for adjudication through the Civilian Personnel Office/Human Resources Office providing personnel service and will include copies of appropriate demonstration project criteria.

C. Pay for Performance

The objective is to establish a pay system that will improve the ability of WES to attract and retain quality employees. The new system will be a pay-for-performance system and, when implemented, will result in a redistribution of pay resources based upon individual performance.

1. Determining Pay Increases

Compensation will be allocated to employees through organizational compensation pools. The WES Director, Commander and Deputy Director, and Laboratory Directors at WES will manage their respective pools.

The compensation pools will have two components: Funds for performance pay increases (money previously available for within-grade increases, quality step increases, and promotions between grades that are banded under the project); and funds for General Schedule pay increases. Performance awards (cash awards and bonuses presently allowed) and locality pay increases will continue under the project and will be excluded from the compensation pools. The compensation pools will be managed to ensure relative cost neutrality. As a result, funds will not be shifted between pools.

Annual base pay increases paid from the performance pay increase component of the compensation pools will be based on eligibility as well as scores on the established standards as follows:

$$PR = \frac{V}{100} S P$$

Where:

PR = employee's annual performance-based pay raise, $

V = value of a share, percent

S = number of shares earned by employee based on performance

P = employee's salary prior to pay raise

The number of shares earned by an employee will vary from 0 to 4 and will depend upon their performance score. A performance pay increase may not cause the employee's rate of basic pay to exceed the maximum rate of the pay band.

The value of a share will be computed in a manner to ensure that the amount of money available for performance pay increases will not exceed the amount of money in a compensation pool that is available for raises. Therefore, the amount of money available annually within a pay pool for performance-based pay raises is:

$$M = \frac{A}{100} \sum_{i=1}^{n} P_i$$

Where:

A = average annual historical pay raise, percent

M = pay pool size, $

P_i = salary of employee I

n = number of employees in compensation pool

The share value (percent) is computed in a manner to ensure exact expenditure of the amount of money in the compensation pool as follows:

$$V = \frac{M}{\sum_{i=1}^{n_e} S_i P_i} \times 100$$

Where:

S_i = number of shares earned by employee I based upon performance

n_e = number of employees within compensation pool that are eligible for a performance-based pay raise

A payout function that correlates number of shares earned by an employee for a performance based pay raise to average performance score will be similar to the plot shown in Figure 1.

The annual General Schedule pay increase will be allocated as follows:

(a) The first step is setting the percentage General Schedule increase that will be given to all eligible employees. This amount will be equal to the General Schedule increase authorized for GS employees. All employees whose average performance score is 2.0 or greater will be eligible for the increase. Employees with an average performance score of less than 2.0 will be ineligible for the full General Schedule increase and may receive either none or one-half of the increase. Pay increases for employees receiving retained rates will be determined in accordance with 5 U.S.C. 5363 except that those with an average performance score of less than 2.0 may receive either none or one-quarter of the increase in the maximum rate of basic pay for the applicable pay band.

BILLING CODE 6325–01–P

Figure 1. Relation Between Shares Earned for Performance and Average Performance Score

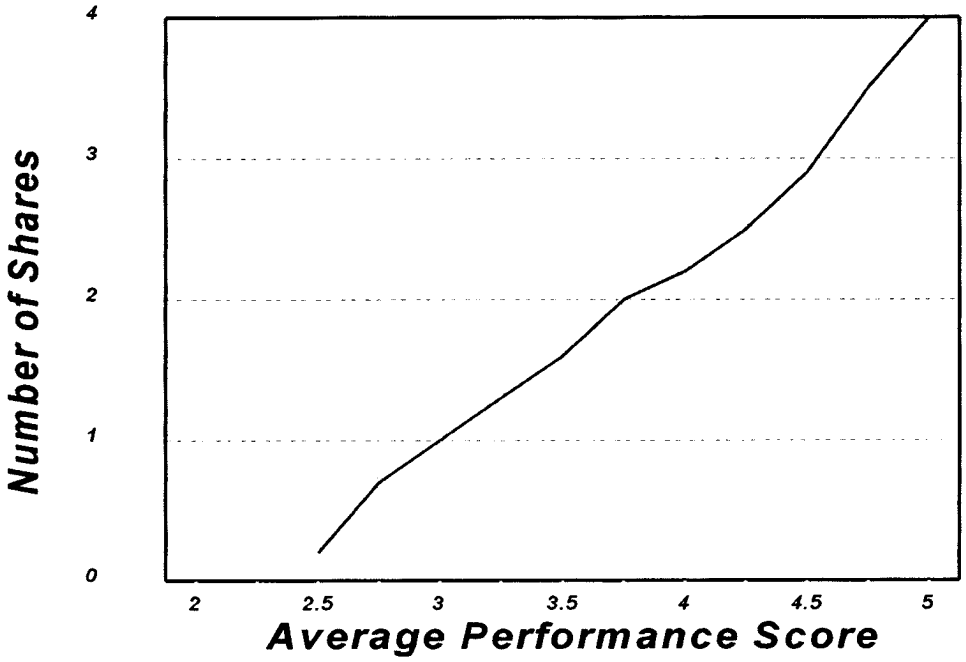

BILLING CODE 6325–01–C

(b) The minimum and maximum pay rates of basic pay for each pay band in an occupational family will be adjusted by any general pay increase to reflect the new rates in accordance with the criteria reflected in Section III, A, Broadbanding, of this plan. The maximum pay rate for pay band VI cannot exceed the rate for SES level 4. Therefore, employees at or near the top of pay band VI may not receive the full general increase if it is not authorized for SES employees.

2. Performance Evaluation

The performance appraisal system will link compensation to performance through annual performance evaluations and performance ratings. Performance will be evaluated against generic performance standards. Rating elements will be provided for all employees. All rating elements will be critical and scored on a scale of 0 to 5. The score will be based on employees performance as evaluated against generic performance standards for each element. The supervisor will discuss performance rating standards with the employee to clarify performance criteria at the beginning of the rating period. The generic performance standards, with the provision to add specific work plans, will be used to evaluate employee performance. The standards will describe the level of performance required for the employee to be rated fully successful. Reviews will be conducted at least at mid-year to evaluate employee progress in meeting performance standards. However, WES interns in recognized career programs will be appraised semi-annually until they complete their internship. The last performance rating in each annual cycle will be considered to be the rating of record.

Since all employees will not have the same number of rating elements, the element scores will be summed and averaged by the number of elements rated to determine the overall performance score. The score will be used for setting performance pay increases and determining eligibility for performance awards.

Employees must have an average performance score of 2.5 and above to be eligible for performance pay increases. Employees with an average performance score of 2.0 or greater will be eligible for performance awards and full General Schedule increases. Employees with an average score of less than 2.0 will be ineligible for performance awards and full General Schedule increases. A within-the-year review may be used to reevaluate employees with performance scores of less than 2.0. If the employee's performance has improved sufficiently since the last rating period, the employee may be eligible for a nonretroactive General Schedule pay raise at that time.

3. Awards

WES currently has an extensive awards program consisting of both internal and external awards. On-the-spot, special act, and other internal awards (both monetary and nonmonetary) will continue under the project. MACOM, DA, and DoD awards and other honorary noncash awards will be retained.

Cash awards may be given for performance and to recognize and encourage special contributions. Awards can be made to individuals, teams, or organizations. Awards must be approved at a managerial level at least one level higher than the recommending official except in the case where the WES Director is the recommender. Cash awards will not be considered to be a part of base pay.

D. Pay Setting Provisions

1. Pay and Compensation

(a) Pay Ceilings. An employee's total monetary compensation paid in a calendar year may not exceed the rate of basic pay for level I of the Executive Schedule consistent with 5 U.S.C. 5307 and 5 CFR part 530, subpart B. Each pay band will have its own pay ceiling, just as grades do in the GS system. Basic pay rates for the various pay bands will be directly keyed to the GS basic rates of pay except for pay band VI in the Engineers and Scientists occupational family. Pay band VI will have pay rates keyed to a minimum of 120% of the

minimum rate of basic pay for GS–15 basic pay with a maximum of the basic rate of pay established for SES level 4.

(b) Staffing Supplements. Employees assigned to occupational series and geographic areas covered by special rates will be eligible for a staffing supplement if the maximum adjusted rate for the banded GS grades to which assigned is a special rate that exceeds the maximum GS locality rate for the banded grades (e.g., certain engineers in pay bands II and III). The staffing supplement is added to the base pay, much like locality rates are added to base pay. The employee's total pay immediately after implementation of the demonstration project will be the same as immediately before the demonstration project, but a portion of the total will be in the form of a staffing supplement. Adverse action and pay retention provisions will not apply to the conversion process as there will be no change in total salary. The staffing supplement is calculated as described below.

Upon conversion, the demonstration base rate will be established by dividing the old GS adjusted rate (the higher of special rate or locality rate) by the staffing factor. The staffing factor will be determined by dividing the maximum special rate for the banded grades by the GS unadjusted rate corresponding to that special rate (step 10 of the GS rate for the same grade as the special rate). The employee's demonstration staffing supplement is derived by multiplying the demonstration base rate by the staffing factor minus one. So the employee's final demonstration special staffing rate equals the demonstration base rate plus the special staffing supplement; this amount will equal the employee's former GS adjusted rate. Simplified, the formula is:

$$\text{Staffing factor} = \frac{\text{Maximum special rate for the banded grades}}{\text{GS rate corresponding to that special rate}}$$

$$\text{Demonstration base rate} = \frac{\text{Old GS adjusted rate (special or locality rate)}}{\text{Staffing factor}}$$

Staffing supplement=Demonstration base rate x (staffing factor—1)

Salary upon conversion=Demonstration base rate + staffing supplement (sum will = existing rate)

Example: In the case of a GS–801–11/03 employee who is receiving a special salary rate, the salary before the demonstration project is $42,944. The maximum special rate for a GS–801–11 Step 10 is $51,295 and the corresponding regular rate is $46,523. The staffing factor is computed as follows:

$$\text{Staffing factor} = \frac{\$51{,}295}{\$46{,}523} = 1.1026$$

$$\text{Demonstration base rate} = \frac{\$42{,}944}{1.1026} = \$38{,}948$$

Then to determine the staffing supplement, multiply the demonstration base by the staffing factor minus 1.

G:\GRAPHICS\EN25MR98.014

The staffing supplement of $3,996 is added to the demonstration base rate of $38,948 and the total salary is $42,944, which is the salary of the employee before conversion to the demonstration project.

If an employee is in a band where the maximum GS adjusted rate for the banded grades is a locality rate, when the employee is converted into the demonstration, the demonstration base rate is derived by dividing the employee's former GS adjusted rate (the higher of locality or special rate) by the applicable locality pay factor. The employee's demonstration locality-adjusted rate will equal the employee's former GS adjusted rate.

Any General Schedule or special rate schedule adjustment will require recomputation of the staffing supplement. Employees receiving a staffing supplement remain entitled to an underlying locality rate, which may over time supersede the need for a staffing supplement. If OPM discontinues or decreases a special rate schedule, affected employees will be entitled to pay retention. Upon geographic movement, an employee who receives the special staffing supplement will have the supplement recomputed. Any resulting reduction in pay will not be considered an adverse action or a basis for pay retention.

Established salary including the staffing supplement will be considered basic pay for the same purposes as a locality rate under 5 CFR 531.606(b), i.e., for purposes of retirement, life insurance, premium pay, and severance pay purposes and for advances in pay. It will also be used to compute worker's compensation payments and lump sum payments for accrued and accumulated annual leave.

2. Promotions

A promotion is the movement of an employee to a higher pay band within the same occupational family or to a pay band in a different occupational family which results in an increase in the employee's salary. Progression within a pay band, whether by performance pay increases or supervisory adjustments, are not subject to the provisions of this section.

Promotions will be processed under competitive procedures in accordance with merit principles and requirements. The following actions are excepted from competitive procedures:

(a) Re-promotion to a position which is in the same pay band and occupational family as the employee previously held on a permanent basis within the competitive service.

(b) Promotion, reassignment, demotion, transfer, or reinstatement to a position having promotion potential no greater than the potential of a position an employee currently holds or previously held on a permanent basis in the competitive service.

(c) A position change permitted by RIF procedures.

(d) Promotion without current competition when the employee was appointed through competitive

procedures to a position with a documented career ladder.

(e) A temporary promotion, or detail to a position in a higher pay band, of 180 days or less.

(f) Impact of person-in-the-job promotions.

(g) Promotion resulting from the accretion of duties and responsibilities.

(h) A promotion resulting from the correction of an initial classification error.

Upon promotion to a higher pay band, an employee will be entitled to a 6 percent basic pay increase or the lowest level in the pay band to which promoted, whichever is greater.

3. Link Between Promotion and Performance

Noncompetitive promotions (e.g., accretion of duties, recognition of impact of person-in-job, career ladder) will require an acceptable level of performance in their current position. To be promoted noncompetitively from one band to the next within an occupational family, an employee must meet the minimum qualifications for the job and have a current average performance score of 2.5 or above (Section III, C, Pay for Performance) or equivalent under a different performance management system (an equivalence chart will be developed by HRM specialists and included in the implementation instructions). Selection of employees through competitive procedures will require a current average performance score of 2.5 or above.

4. Supervisory Pay Adjustments

Supervisory pay adjustments may be used, at the discretion of the WES Director, to compensate employees in the Engineers and Scientists occupational family in supervisory positions. Employees in pay band VI of the Engineers and Scientists occupational family are excluded from receiving supervisory pay adjustments. Supervisory pay adjustments are increases to the supervisor's basic rate of pay, ranging up to 10 percent of that pay rate, subject to the constraint that the adjustment may not cause the employee's basic rate of pay to exceed the pay band maximum rate. Only employees in supervisory positions with formal supervisory authority meeting that required for coverage under the OPM GS Supervisory Guide will be considered for the supervisory pay adjustment. Criteria to be considered in determining the pay increase percentage include the following organizational and individual employee factors: needs of the organization to attract, retain, and motivate high quality supervisors; budgetary constraints; years of supervisory experience; amount of supervisory training received; performance; and managerial impact on the organization.

Conditions, after the date of conversion into the demonstration project, under which the application of a supervisory pay adjustment will be considered are as follows:

(a) New hires into supervisory positions will have their initial rate of basic pay set at the supervisor's discretion within the pay range of the applicable pay band. This rate of pay may include a supervisory pay adjustment determined using the ranges and criteria outlined above.

(b) An employee selected for a supervisory position that is within the employee's current pay band may also be considered for a supervisory pay adjustment.

(c) If a supervisor is already authorized a supervisory pay adjustment and is subsequently selected for another supervisory position, within the same pay band, then the supervisory pay adjustment will be redetermined.

(d) An employee promoted to a supervisory position in a higher pay band may be considered for a supervisory adjustment in addition to the pay increase that resulted from the promotion.

Supervisors, upon initial conversion into the demonstration project into the same, or substantially similar position, will be converted at their existing basic rate of pay and will not be given a supervisory pay adjustment at conversion.

Before supervisory employees may receive the pay adjustment, they must sign a statement acknowledging that the entire adjustment will be immediately withdrawn if they are removed from the supervisory position because of unacceptable performance or conduct. Supervisory employees who are reassigned to a nonsupervisory position for any other reasons (i.e., employee choice, management directed reassignment, or RIF) will receive one-half of the pay adjustment for one year following the reassignment. Eliminations or reductions in supervisory pay adjustments are not adverse actions, are not subject to appeal, and are not covered under pay retention provisions.

5. Supervisory Pay Differentials

Supervisory pay differentials may be used, at the discretion of the WES Director, to incentivize and reward supervisors in the Engineers and Scientists occupational family in pay bands IV and V whose pay is at the maximum rate of the pay band. Employees in pay band VI of the Engineers and Scientists occupational family are excluded from receiving supervisory pay differentials. Formal supervisory authority meeting that required for coverage under the OPM GS Supervisory Guide is required. A supervisory pay differential is a cash incentive, paid out on a pay period basis, which is not included as part of the supervisor's basic rate of pay. The differential may be up to 10 percent of the supervisor's basic rate of pay. Criteria to be considered in determining the amount of this supervisory pay differential includes those identified for supervisory pay adjustments.

Supervisors, upon initial conversion into the demonstration project into the same, or substantially similar position, will be converted at their existing basic rate of pay and will not be given a supervisory pay differential upon conversion. The differential will be terminated if the employee is removed from a supervisory position, regardless of cause.

As specified in the Supervisory Pay Adjustment Section, all personnel actions involving a supervisory differential will require a statement signed by the employee acknowledging that the differential may be terminated or reduced at the discretion of the WES Director. The termination or reduction of the differential is not an adverse action, is not subject to appeal, and is not covered under pay retention provisions.

E. Hiring and Placement Authorities

1. Modified Term Appointments

WES conducts many research and development projects that range from 3 to 6 years. The current 4-year limitation on term appointments imposes a burden on laboratory managers by forcing the termination of some term employees prior to completion of projects they were hired to support. This disrupts the research and development process and reduces the ability of WES to serve its customers.

Under the demonstration project, WES will have the authority to hire individuals under modified term appointments. These appointments will be used to fill positions for a period of more than 1 year but not more than 5 years when the need for employee's services is not permanent. The modified term appointments differ from term employment as described in 5 CFR part 316 in that they may be made for a period not to exceed 5, rather than 4 years. The WES Director is authorized to

extend a term appointment 1 additional year.

Employees hired under the modified term appointment authority may be eligible for conversion to career-conditional appointments. To be converted, the employee must: have been selected for the term position under competitive procedures, with the announcement specifically stating that the individual(s) selected may be eligible for conversion to a career-conditional appointment at a later date; have served 2 years of continuous service in the term position; be selected under WES merit promotion procedures for the permanent position; and have a current performance score of 2.5 or better.

Employees serving under term appointments at the time of conversion to the demonstration project will be converted to the new modified term appointments provided they were hired for their current positions under competitive procedures. These employees will be eligible for conversion to career-conditional appointment if they have a current performance score of 2.5 or better and are selected under merit promotion procedures for the permanent position after having completed 2 years of continuous service. Time served in term positions prior to conversion to the modified term appointment is creditable, provided the service was continuous. Employees serving under modified term appointments under this plan will be covered by the plan's pay-for-performance system.

2. Extended Probationary Period

A new employee needs to demonstrate adequate contribution during all cycles of a research effort for a laboratory manager to render a thorough evaluation. The current 1-year probationary period will be extended to 2 years for all newly hired career employees in the Engineers and Scientists occupational family. The purpose of extending the probationary period is to allow supervisors an adequate period of time to fully evaluate an employee's contribution and conduct.

Aside from extending the time period, all other features of the current probationary period, including the criteria for crediting prior service and the limited notice and appeal rights, are retained. The requirements for conversion to career tenure are unchanged. Employees appointed prior to the implementation date will not be affected.

Probationary employees will be terminated when the employee fails to demonstrate proper conduct, technical competency, and/or adequate work contribution for continued employment. When WES decides to terminate an employee serving a probationary period because their work contribution or conduct during this period fails to demonstrate their fitness or qualifications for continued employment, it shall terminate their services by written notification of the reasons for separation and the effective date of the action. The information in the notice as to why the employee is being terminated shall, as a minimum, consist of WES's conclusions as to the inadequacies of their work contribution or conduct.

3. Voluntary Emeritus Program

Under the demonstration project, the WES Director will have the authority to offer retired or separated engineers and scientists voluntary assignments in the laboratory. This authority will include engineers and scientists who have retired or separated from Federal service. Voluntary Emeritus Program assignments are not considered ''employment'' by the Federal Government (except for purposes of injury compensation). Thus, such assignments do not affect an employee's entitlement to buy-outs or severance payments based on an earlier separation from Federal service. The Voluntary Emeritus Program will ensure continued quality research while reducing the overall salary line by allowing higher paid individuals to accept retirement incentives with the opportunity to retain a presence in the scientific community. The program will be of most benefit during manpower reductions as senior engineers and scientists could accept retirement and return to provide valuable on-the-job training or mentoring to less experienced employees.

To be accepted into the emeritus program, a volunteer must be recommended by a Laboratory Director to the WES Director. Everyone who applies is not entitled to a voluntary assignment. The WES Director must clearly document the decision process for each applicant (whether accepted or rejected) and retain the documentation.

To ensure success and encourage participation, the volunteer's federal retirement pay (whether military or civilian) will not be affected while serving in a voluntary capacity. Retired or separated federal employees may accept an emeritus position without a waiting period.

Volunteers will not be permitted to monitor contracts on behalf of the government or to participate on any contracts or solicitations where a conflict of interest exists. The same rules that currently apply to source selection members will apply to volunteers.

An agreement will be established between the volunteer and WES. The agreement will be reviewed by the local Office of Counsel for ethics determinations under the Joint Ethics Regulation. The agreement must be finalized before the assumption of duties and shall include:

(a) A statement that the voluntary assignment does not constitute an appointment in the civil service and is without compensation and any and all claims against the Government because of the voluntary assignment are waived by the volunteer;

(b) A statement that the volunteer will be considered a federal employee for the purpose of injury compensation;

(c) Volunteer's work schedule;

(d) Length of agreement (defined by length of project or time defined by weeks, months, or years);

(e) Support provided by the laboratory (travel, administrative, office space, supplies);

(f) A one page Statement of Duties;

(g) A provision that states no additional time will be added to a volunteer's service credit for such purposes as retirement, severance pay, and leave as a result of being a member of the Voluntary Emeritus Program;

(h) A provision allowing either party to void the agreement with 10 working days written notice; and

(i) The level of security access required (any security clearance required by the assignment will be managed by the laboratory while the volunteer is a member of the Voluntary Emeritus Program).

F. Employee Development

The objective of the employee development program will be to develop the competence of employees for maximum achievement of Laboratory, MACOM, DA, and DoD goals. WES will continue its employee development programs, such as local training, off-site training, long-term training, and developmental assignments. Under this Project, the opportunity to apply for expanded developmental opportunities to include sabbaticals and training for degrees, which was previously restricted, will be made available to permanent employees.

1. Sabbatical

WES will have the authority to grant paid sabbaticals to career employees to permit them to engage in study or uncompensated work experience that

will contribute to their development and effectiveness. Each sabbatical should benefit WES as well as increase the employee's individual effectiveness. Examples are as follows: advanced academic teaching, study, or research; self-directed (independent) or guided study; and on-the-job work experience with a public, private, or nonprofit organization. Each recipient of a sabbatical must sign a continued service agreement and agree to serve a period equal to at least three times the length of the sabbatical.

2. Degree Training

Degree training is an essential component of an organization that requires continuous acquisition of advanced and specialized knowledge. Degree training in the academic environment of DoD laboratories is also a critical tool for recruiting and retaining employees with or requiring critical skills. Constraints under current law and regulation limit degree payment to shortage occupations. In addition, current government-wide regulations authorize payment for degrees based only on recruitment or retention needs. Degree payment is currently not permitted for non-shortage occupations involving critical skills.

Under the Personnel Demonstration Project, WES will expand the authority to provide degree training for purposes of meeting critical skill requirements, to ensure continuous acquisition of advanced and specialized knowledge essential to the organization, and to recruit and retain personnel critical to the present and future requirements of the organization. It is expected that the degree payment authority will be used primarily for attainment of advanced degrees.

G. Reduction in Pay or Removal Actions

Employees covered by the project will be evaluated under a performance evaluation system that affords grievance and/or appeal rights the same as those provided currently.

1. Unacceptable Performance

An employee whose performance is unacceptable (i.e.,who does not perform at the acceptable level described by the standards for a particular critical element, and whose performance thus warrants a performance score of 0 on that element) at any time during the year shall be placed in a Performance Improvement Plan (PIP). If an employee is in a PIP at the end of a rating period, the performance rating will be delayed until the end of the PIP. Any General Schedule increase will be based on the rating at the end of the PIP. If performance remains unsatisfactory upon completion of the PIP, the employee will be separated from his or her position or reduced to a lower pay band. If performance becomes satisfactory, the employee will receive a performance rating of record and appropriate adjustments to pay may be made at that time (i.e., granting General Schedule increase). These performance-based actions will follow the same procedures as current performance-related removals and reductions in grade under Chapter 43 or Chapter 75 when appropriate.

2. Placement in a Lower Pay Band

An employee with an average performance score of less than 2.0 is ineligible for a performance pay increase or performance award and may receive either none or one-half the General Schedule pay increase. Because the minimum pay rate for each pay band will be increased each year by the amount of the General Schedule increase, it is possible that the new minimum rate of a pay band will exceed the basic pay of an employee in that band who did not receive the full General Schedule increase. In these cases, the employee will be moved to the next lower band level. This will not be considered an adverse action, will not be appealable through a statutory appeals process, and will not be covered under grade retention provisions.

H. Revised Reduction in Force (RIF) Procedures

Modifications include limiting competitive areas to occupational families and increasing the emphasis on performance in the RIF process. These modifications will increase the probability of retaining the highest performing individuals in their positions and will increase the probability of displacing the lowest performing individuals.

1. Competitive Areas

For RIF purposes, the competitive area will be the occupational family in which the employee is assigned and will cover all geographic locations.

2. Retention

Retention registers will be established based on the following criteria listed in order of priority: Tenure status (Tenure I-career, Tenure II-career conditional, Tenure III-modified term); veteran's preference; most recent employee performance score; and service computation date. Modified term employees within the affected occupational family will be separated before permanent Tenure I and II employees. The present RIF system essentially remains in effect, except that performance scores are part of the retention order. Performance scores will not be used to adjust the service computation date. The service computation date will be used as a tie breaker. A preference eligible with a compensable service-connected disability of 30 percent or more may displace employees in positions equivalent to 5 GS grades below the minimum grade level of his/her current pay band. Other employees may displace employees in positions no more than two pay band levels below the minimum level of his/her current pay band. Increasing the emphasis on job performance will help ensure the retention of outstanding individuals in RIF situations.

In some cases, an employee may not have a performance score of record. In these situations, a modal performance score will be assigned.

An employee who has received a written decision to demote him/her to a lower pay band competes in a RIF from the position to which he/she has been demoted. Employees who have been demoted for unacceptable performance or conduct, and as of the date of issuance of the RIF notice have not received a performance score in the position to which demoted, will receive a modal performance score.

An employee who has received an improved performance score following a PIP will have the improved performance score considered as the current performance score of record, provided that notification of such improvement is approved and received prior to the cutoff for receipt of personnel actions associated with implementation of RIF mechanics.

An employee with a current rating of unsatisfactory has assignment rights only to a position held by another employee who has a rating of unsatisfactory. An employee who has been given a written decision of removal will not compete in the RIF process.

Modified term appointment employees are in Tenure Group III for reduction in force purposes. Reduction in force procedures are not required when separating these employees when their appointments expire.

3. Grade and Pay Retention

Except where waived or modified in the waiver section of this plan, grade and pay retention will follow current law and regulations.

IV. Training

The key to the success or failure of the proposed demonstration project will be

the training provided for all involved. This training will not only provide the necessary knowledge and skills to carry out the proposed changes, but will also lead to commitment to the program on the part of all participants. Training will be tailored to fit the requirements of every employee included in the project and will fully address employee concerns to ensure that everyone has a comprehensive understanding of the program.

Training at the beginning of implementation and throughout the demonstration will be provided to supervisors, employees, and the administrative staff responsible for assisting managers in effecting the changeover and operation of the new system.

The elements to be covered in the orientation portion of this training will include the following: A description of the system; how employees are converted into the system; pay adjustment process; familiarization with the new position descriptions and performance objectives; the individual performance rating process; the reconsideration process; and the demonstration project administrative and formal evaluation process.

A. Supervisors

The focus of this project on management-centered personnel administration, with increased supervisory and managerial personnel management authority and accountability, demands thorough training of supervisors and managers in the knowledge and skills that will prepare them for their new responsibilities. Training will include detailed information on the policies and procedures of the demonstration project, skills training in using the classification system, position description preparation, and performance evaluation. Additional training may focus on nonproject procedural techniques such as interpersonal and communication skills.

B. Administrative Staff

The administrative staff, generally personnel specialists, technicians, and administrative officers, will play a key role in advising, training, and coaching supervisors and employees in implementing the demonstration project. This staff will need training in the procedural and technical aspects of the project.

C. Employees

WES will train employees covered under the demonstration project. In the months leading up to the implementation date, meetings will be held for employees to fully inform them of all project decisions, procedures, and processes.

V. Conversion

A. Conversion to the Demonstration Project

Initial entry into the demonstration project for covered employees will be accomplished through a full employee protection approach that ensures each employee an initial place in the appropriate occupational family and pay band without loss of pay. An automatic conversion from current GS/GM grade and pay into the new broadbanding system will be accomplished.

Special conversion rules will apply to special rate employees (see Section III, D, Pay Setting Provisions). Employees who enter the demonstration project later by lateral reassignment or transfer will be subject to the same pay conversion rules. Employees serving under regular term appointments at the time of project implementation will be converted to the modified term appointment. Position announcements, etc., will not be required for these term appointments. If conversion into the demonstration project is accompanied by a geographic move, the employee's GS pay entitlements in the new geographic area must be determined before performing the pay conversion.

Employees who are on temporary promotions at the time of conversion will be converted to a pay band commensurate with the grade of the position to which temporarily promoted. At the conclusion of the temporary promotion, the employee will revert to the pay band which corresponds to the grade of record. When a temporary promotion is terminated, the employee's pay entitlements will be determined based on the employee's position of record, with appropriate adjustments to reflect pay events during the temporary promotion, subject to the specific policies and rules established by WES. In no case may those adjustments increase the pay for the position of record beyond the maximum pay rate for the applicable pay band. The only exception will be if the original competitive promotion announcement stipulated that the promotion could be made permanent; in these cases, actions to make the temporary promotion permanent will be considered and, if implemented, will be subject to all existing priority placement programs.

At the time of conversion, each employee will have their basic pay adjusted for the time credited (in weeks) toward what would have been the employee's next within-grade increase. This adjustment in basic pay is applicable when employees are converted into the project.

Any employee covered by the project that is located at a permanent duty station Outside the Continental United States will continue to be ineligible for locality pay. Except for the maximum rate of basic pay for pay band VI, which will be limited to rate of basic pay for SES level 4, the maximum basic salary payable in the pay band will be limited to the maximum rate of pay on the GS salary table which does not include any locality pay.

B. Conversion From the Demonstration Project

If a demonstration project employee is moving to a GS position not under the demonstration project, or if the project ends and each project employee must be converted back to the GS system, the following procedures will be used to convert the employee's project pay band to a GS equivalent grade and the employee's project rate of pay to GS equivalent rates of pay. The converted GS grade and rates of pay must be determined before movement or conversion out of the demonstration project and any accompanying geographic movement, promotion, or other simultaneous action. For conversions upon termination of the project and for lateral reassignments, the converted GS grade and rates of pay will become the employee's actual GS grade and rates of pay after leaving the demonstration project (before any other action). For transfers, promotions, and other actions, the converted GS grade and rates of pay will be used in applying any GS pay/administration rules applicable in connection with the employee's movement out of the project (i.e., promotion rules, highest previous rate rules, pay retention rules) as if the GS converted grade and rates of pay were actually in effect immediately before the employee left the demonstration project.

1. Grade-Setting Provisions

An employee in a pay band corresponding to a single GS grade is converted to that grade. An employee in a pay band corresponding to two or more grades is converted to one of those grades according to the following rules:

(a) The employee's adjusted rate of basic pay under the demonstration project (including any locality payment or staffing supplement but excluding any supervisory pay adjustment) is compared with step 4 rates in the

highest applicable GS rate range. For this purpose, a ''GS rate range'' includes a rate range in the GS base schedule, the locality rate schedule for the locality pay area in which the position is located, or the appropriate special rate schedule for the employee's occupational series, as applicable. If the series is a two-grade interval series, only odd-numbered grades are considered below GS–11.

(b) If the employee's adjusted project rate equals or exceeds the applicable step 4 rate of the highest GS grade in the band, the employee is converted to that grade.

(c) If the employee's adjusted project rate of pay is lower than the applicable step 4 rate of the highest grade, the adjusted rate of pay is compared with the step 4 rate of the second highest grade in the employee's pay band. If the employee's adjusted rate of pay equals or exceeds step 4 rate of the second highest grade, the employee is converted to that grade.

(d) This process is repeated for each successively lower grade in the band until a grade is found in which the employee's adjusted project rate of pay equals or exceeds the applicable step 4 rate of the grade. The employee is then converted at that grade. If the employee's adjusted rate of pay is below the step 4 rate of the lowest grade in the band, the employee is converted to the lowest grade.

(e) Exception: If the employee's adjusted project rate of pay exceeds the maximum rate of the grade assigned under the above-described ''step 4'' rule but fits in the rate range for the next higher applicable grade (i.e., between step 1 and step 4), then the employee shall be converted that next higher applicable grade.

(f) Exception: An employee will not be converted to a lower grade than the grade held by the employee immediately preceding a conversion, lateral reassignment, or lateral transfer into the project, unless since that time the employee has undergone a reduction in band.

2. Pay-Setting Provisions

An employee's pay within the converted GS grade is set by converting the employee's demonstration project rates of pay to GS rates of pay in accordance with the following rules:

(a) The pay conversion is done before any geographic movement or other pay-related action that coincides with the employee's movement or conversion out of the demonstration project.

(b) An employee's adjusted rate of basic pay under the project (including any locality payment or staffing supplement but excluding any supervisory pay adjustment) is converted to a GS adjusted rate of pay on the highest applicable GS rate range for the converted GS grade. For this purpose, a ''GS rate range'' includes a rate range in the GS base schedule, an applicable locality rate schedule, or an applicable special rate schedule.

(c) If the highest applicable GS rate range is a locality pay rate range, the employee's adjusted project rate of pay is converted to a GS locality rate of pay. If this rate falls between two steps in the locality-adjusted schedule, the rate of pay must be set at the higher step. The converted GS unadjusted rate of basic pay would be the GS base rate corresponding to the converted GS locality rate (i.e., same step position). If this employee is also covered by a special rate schedule as a GS employee, the converted special rate will be determined based on the GS step position. This underlying special rate will be basic pay for certain purposes for which the employee's higher locality rate is not basic pay.

(d) If the highest applicable GS rate range is a special rate range, the employee's adjusted project rate is converted to a special rate. If this rate falls between two steps in the special rate schedule, the rate must be set at the higher step. The converted GS unadjusted rate of basic pay will be the GS rate corresponding to the converted special rate (i.e., same step position).

3. Engineers and Scientists Pay Band VI Employees

Employees in pay band VI of the Engineers and Scientists occupational family will convert out of the demonstration project at the GS–15 level. WES will develop a procedure to ensure that employees entering pay band VI understand that if they leave the demonstration project and their adjusted pay exceeds the GS–15, step 10 rate, there is no entitlement to retained pay; their GS equivalent rate will be deemed to be the rate for GS–15, step 10. For those pay band VI employees paid below the adjusted GS–15, step 10 rate, the converted rates will be set in accordance with paragraph 2 above.

4. Employees With Band or Pay Retention

(a) If an employee is retaining a pay band level under the demonstration project, apply the procedures in paragraphs 1 and 2, above, using the grades encompassed in the employee's retained band to determine the employee's GS equivalent retained grade and pay rate. The time in a retained band under the demonstration project counts toward the 2-year limit on grade retention in 5 U.S.C. 5382.

(b) If an employee is retaining rate under the demonstration project, the employee's GS equivalent grade is the highest grade encompassed in his or her band level. WES will coordinate with OPM to prescribe a procedure for determining the GS equivalent pay rate for an employee retaining a rate under the demonstration project.

5. Within-Grade Increase—Equivalent Increase Determinations

Service under the demonstration project since the last pay-for-performance determination is creditable for within-grade increase purposes upon conversion back to the GS pay system. Performance pay increases (including a zero increase) under the demonstration project are equivalent increases for the purpose of determining the commencement of a within-grade increase waiting period under 5 CFR 531.405(b).

VI. Project Duration

Public Law 103–337 removed any mandatory expiration date for this demonstration. The project evaluation plan adequately addresses how each intervention will be comprehensively evaluated for at least the first 5 years of the demonstration (Proposed Plan for the Evaluation of the DoD Laboratory Demonstration Program, OPM, 1995). Major changes and modifications to the interventions can be made through announcement in the Federal Register and would be made if formative evaluation data warranted. At the 5 year point, the entire demonstration will be reexamined for either: permanent implementation; change and another 3–5 year test period; or expiration.

VII. Evaluation Plan

Authorizing legislation mandated evaluation of the demonstration project to assess the merits of project outcomes and to evaluate the feasibility of applications to other federal organizations. A comprehensive and methodologically rigorous evaluation of the personnel system changes will be carried out. The overall evaluation consists of two components—external and internal evaluation. The external evaluation will be conducted by OPM's Personnel Resources and Development Center (PRDC) to benefit from their extensive experience evaluating demonstration projects. PRDC will serve in the role of external evaluator to ensure the integrity of the evaluation process, outcomes, and interpretation of results. Their external evaluation will be supplemented by an internal evaluation

to be accomplished by the staff of WES. Selected parts of the evaluation will be completed using contractor support. The contractor(s) will be well qualified and experienced with demonstrated expertise in performing relevant support functions.

Essential elements of the evaluation plan are set forth below. The demonstration project is a complex experiment to be conducted in a dynamic environment over several years. Modifications and refinements to the evaluation plan will be made as required by mid-course project changes. All additions, deletions, and refinements to the current plan will be fully documented and explained as part of the evaluation reporting process. The main purpose of the evaluation is to determine the effectiveness of the personnel system changes described by the individual interventions. Every effort will be made to establish direct cause-and-effect relationships between the interventions and effectiveness criteria. An ancillary objective is to assess the effects of the interventions on improved organizational performance. An indirect causal link is hypothesized between the personnel system changes and improved organizational effectiveness, i.e., improved laboratory performance, mission accomplishment, and customer satisfaction. The current personnel management system with its many rigid rules and regulations often is perceived as a barrier to mission accomplishment. Together, the demonstration project initiatives are intended to remove some of those barriers, and therefore, are expected to contribute to improved laboratory performance.

The evaluation effort will be accomplished in four distinct phases:

(a) Design phase—includes development of the evaluation model, selection of experimental and comparison sites, and collection of baseline data prior to implementation.

(b) Implementation phase—includes actual project implementation and monitoring of the degree and support of implementation to assure that each of the project interventions has been operationalized as originally conceived.

(c) Formative evaluation phase—includes data collection and analysis for five years for purposes of evaluating the effects of the interventions. Periodic reports and annual summaries will be prepared to document the findings.

(d) Summative evaluation phase—focuses on summary evaluation and overall assessment of the project's impact, including presentation of conclusions and final recommendations upon completion of the project.

An intervention impact model (Appendix A) will be used to measure the effectiveness of the various personnel system changes or interventions. Additional measures will be developed as new interventions are introduced or existing interventions modified with consistent with expected effects. Measures may also be deleted when appropriate. Activity specific measures may also be developed to accommodate specific needs or interests which are locally unique.

The evaluation model for the Demonstration Project identifies elements critical to an evaluation of the effectiveness of the interventions. The overall evaluation approach will also include consideration on context variables that are likely to have an impact on project outcomes (e.g., HRM regionalization, downsizing, cross-service integration, and the general state of the economy). However, the main focus of the evaluation will be on intermediate outcomes, i.e., the results of specific personnel system changes which are expected to improve human resources management. The ultimate outcomes are defined as improved organizational effectiveness, mission accomplishment, and customer satisfaction.

Data from a variety of different sources will be used in the evaluation. Information from existing management information systems supplemented with perceptual data will be used to assess variables related to effectiveness. Multiple methods provide more than one perspective on how the demonstration project is working. Information gathered through one method will be used to validate information gathered through another. Confidence in the findings will increase as they are substantiated by the different collection methods. The following types of data will be collected as part of the evaluation: workforce data; personnel office data; employee attitudes and feedback using surveys, structured interviews and focus groups; local activity histories, and core measures of laboratory effectiveness.

VIII. Demonstration Project Costs

Costs associated with the development of the personnel demonstration system include software automation, training, and project evaluation. All funding will be provided through the WES budget. The projected annual expenses for each area is summarized in Table 4.

TABLE 4.—PROJECTED DEVELOPMENTAL COSTS

	FY 96	FY 97	FY 98	FY 99	FY 00	FY 01
Training	.....	$97K	$19K	.....	.....	.....
Project Evaluation	$25K	60K	60K	$60K	$60K	$60K
Automation	80K	10K	.....	.....	.....	.....
Totals	105K	167K	79K	60K	60K	60K

IX. Required Waivers to Law and Regulations

Public Law 103–337 gave the DoD the authority to experiment with several personnel management innovations. In addition to the authorities granted by the law, the following are the waivers of law and regulation that will be necessary for implementation of the Demonstration Project. In due course, additional laws and regulations may be identified for waiver request.

A. Waivers to Title 5, U.S. Code

Section 3111, Acceptance of volunteer service.

Section 3132, The Senior Executive Service; definitions and exclusions.

Section 3324, Appointments to positions classified above GS–15.

Section 3341, Details (to the extent that non-competitive details to higher band levels can now be 180 days rather than 120).

Section 4107, Non-Government facilities; restrictions (to the extent that training may be paid for the purpose of an employee to obtain a degree).

Section 4108, Employee agreements; service after training (to the extent that continued service is required only for long-term training and sabbaticals).

Section 4303(f), Actions based on unacceptable performance (to the extent

necessary to: (1) Substitute ''pay band'' for ''grade'' and (2) provide that moving to a lower pay band as a result of not receiving the full amount of a general pay increase because of poor performance is not an action covered by the provisions of section 4303).

Sections 5101–5111, Purpose, definitions, basis, classification of positions, review, authority (to the extent that white collar employees will be covered by broadbanding. Pay category determination criteria for Federal Wage System positions remain unchanged).

Sections 5301; 5302 (8), and (9); 5303; and 5304, Pay comparability system (Sections 5301, 5302, and 5304 are waived only to the extent necessary to allow: (1) Demonstration project employees to be treated as General Schedule employees; (2) basic rates of pay under the demonstration project to be treated as scheduled rates of basic pay; and (3) employees in band VI of the Engineers and Scientists occupational family to be treated as ST employees for the purposes of these provisions).

Section 5305, Special pay authority.

Sections 5331–5336, General Schedule pay rates.

Sections 5361–5366, Grade and pay retention (to the extent necessary to (1) replace ''grade'' with ''pay band'; (2) allow demonstration project employees to be treated as General Schedule; (3) provide that pay band retention provisions do not apply to movements to a lower pay band as a result of receiving no or only part of a general pay increase because of poor performance; (4) provide that pay retention provisions do not apply to conversions from General Schedule special rates to demonstration project pay, as long as total pay is not reduced, and to reductions in pay due solely to the removal of all or part of a supervisory pay adjustment upon leaving a supervisory position; (5) provide that an employee on pay retention whose performance rating is less than 2.0 is not entitled to 50 percent of the amount of the increase in the maximum rate of basic pay payable for the pay band of the employee's position; and (6) ensure that for employees of pay band VI of the Engineers and Scientists occupational family, pay band retention is not applicable and pay retention provisions are modified so that no rate established under these provisions may exceed the rate of basic pay for GS–15, step 10 (i.e., there is no entitlement to retained rate).

Section 5545, Night, standby, irregular, and hazardous duty differential (to the extent necessary to allow demonstration project employees to be treated as General Schedule employees. This waiver does not apply to employees in band VI of the Engineers and Scientists occupational family).

Sections 5753, 5754, and 5755, Recruitment and relocation bonuses, retention allowances, and supervisory differentials (to the extent necessary to allow: (1) Employees and positions under the demonstration project to be treated as employees and positions under the General Schedule; and (2) employees in band VI of the Engineers and Scientists occupational family to be treated as ST employees).

Section 7512(3), Adverse actions (to the extent necessary to (1) substitute ''pay band'' for ''grade'' and (2) provide that moving to a lower pay band as a result of not receiving the full amount of a general pay increase because of poor performance is not an adverse action).

Section 7512(4), Adverse actions (to the extent necessary to provide that adverse action provisions do not apply to: (1) Conversions from General Schedule special rates to demonstration project pay, as long as total pay is not reduced; and (2) reductions in pay due to removal of all or part of a supervisory adjustment).

B. Waivers to Title 5, Code of Federal Regulations

Part 300.601–605, Time-in-grade restrictions (to the extent that time-in-grade restrictions are eliminated).

Part 308.101–103, Volunteer service (to the extent that volunteer service is unrestricted).

Parts 315.801(a) and 315.802(a), Length of probationary period (to the extent that the probationary period for engineers and scientists is increased to 2 years).

Part 316.301, Term appointment (to the extent that modified term appointments may cover a maximum period of 6 years).

Part 316.303, Tenure of term employees (to the extent that term employees may compete for permanent status through local merit promotion plans).

Part 316.305, Eligibility for within grade increases.

Part 335.103, Covering the length of details and temporary promotions.

Part 351.402(b), Competitive area (to the extent that occupational family is the competitive area).

Part 351.403, Competitive level (to the extent that pay band is substituted for grade).

Part 351.504, Retention standing, credit for performance (to the extent that service credit will not be modified based on performance rating).

Part 351.701, Assignment involving displacement (to the extent that a performance score of 1 is substituted for level 2 and bumping and retreating will be limited to no more than 2 pay bands except for 30 percent compensable veterans who can retreat to the equivalent of 5 GS grades).

Part 410.308, Training to obtain an academic degree.

Part 410.309, Agreements to continue in service. (To the extent necessary that individuals pursuing academic degrees do not sign service agreements.)

Part 430.204, Definition of rating of record (to the extent necessary to allow ratings of record that do not cover performance over the entire appraisal period).

Part 430.208(d), Summary levels (to the extent necessary to allow use of summary performance scores that are not further categorized into five or fewer summary levels).

Part 432.104–105, Performance based reduction in grade and removal actions (to the extent that ''pay band'' is substituted for ''grade'' and reduction in band level as a result of non-receipt of General Schedule increases because of poor performance is not an adverse action.

Part 511.101, 201–203, General provisions and coverage of the General Schedule (to the extent that positions are covered by broadbanding).

Part 511.601–612, Classification appeals (to the extent that positions are covered by broadbanding).

Part 530, subpart C, Special salary rates.

Part 531, subparts B, D, and E, Determining the rate of basic pay, within-grade increases, and quality step increases.

Part 531, subpart F, Locality-based comparability payments (to the extent necessary to allow: (1) Demonstration project employees to be treated as General Schedule employees; (2) basic rates of pay under the demonstration project to be treated as scheduled annual rates of pay; and (3) employees in band VI of the Engineer and Scientist occupational family to be treated as ST employees).

Part 536, Grade and pay retention (to the extent necessary to: (1) Replace ''grade'' with ''pay band''; (2) provide that pay band retention provisions do not apply to movements to a lower pay band as a result of receiving no or only part of a general pay increase because of poor performance; (3) provide that pay retention provisions do not apply to conversions from General Schedule special rates to demonstration project

pay, as long as total pay is not reduced, and to reductions in pay due solely to the removal of all or part of a supervisory pay adjustment upon leaving a supervisory position; (4) provide than an employee on pay retention whose performance rating is less than 2.0 is not entitled to 50 percent of the amount of the increase in the maximum rate of basic pay payable for the pay band of the employee's position and (5) ensure that for employees in pay band VI of the Engineers and Scientists occupational family, pay band retention is not applicable and pay retention provisions are modified so that no rate established under these provisions may exceed the rate of basic pay for GS–15, step 10 (i.e., there is no entitlement to retained rate).

Part 550.703, Severance pay (to the extent necessary to modify the definition of ''reasonable offer'' by replacing ''two grade or pay levels'' with ''one band level'' and ''grade or pay level'' with ''band level'').

Part 550.902, Hazardous duty differential, definition of ''employee'' (to the extent necessary to allow demonstration project employees to be treated as General Schedule employees. This waiver does not apply to employees in band VI of the Engineers and Scientists occupational family).

Part 575, subparts A, B, C, and D, Recruitment bonuses, relocation bonuses, retention allowances and supervisory differentials (to the extent necessary to allow (1) employees and positions under the demonstration project to be treated as employees and positions under the General Schedule and (2) employees in band VI of the Engineers and Scientists occupational family to be treated as ST employees for the purposes of these provisions).

Part 752.401 (a)(3), Adverse actions (this provision is waived only to the extent necessary to (1) substitute ''pay band'' for ''grade'' and (2) provide that moving a lower pay band as a result of not receiving the full amount of a general pay increase because of poor performance is not an adverse action.

Part 752.401 (a)(4), Adverse actions (to the extent necessary to provide that adverse action provisions do not apply to: (1) Conversions from General Schedule special rates to demonstration project pay, as long as total pay is not reduced; and (2) reductions in pay due to the removal of all or part of a supervisory adjustment).

APPENDIX A—INTERVENTION IMPACT MODEL: PROJECT EVALUATION

Intervention	Expected effects	Measures	Data sources
1. Broadbanding:			
a. Pay Bands	—Less difficulty and less time spent on classification.	—Perceptions of difficulty and time spent on classification activities by managers and personnelists.	—Focus groups. —Attitude survey. —Personnel activity reports.
	—Increased understanding with the classification results under the new system.	—Perceptions of satisfaction with classification process.	—Focus groups. —Attitude survey.
b. Occupational Families	—Increased satisfaction with advancement potential.	—Perceptions of satisfaction with career path process and progression.	—Focus groups. —Attitude survey.
	—Increase in management authority.	—Perception of authority	—Attitude survey.
c. Conversion of Employees to the Demonstration Project.	—Employee acceptance	—Perception of equity and fairness.	—Attitude survey.
2. Classification:			
a. Classification Standards	—Less difficulty and less time spent on classification; less difficulty classifying jobs.	—Perceptions of difficulty and time spent on classification activities by managers and personnelists.	—Focus groups. —Attitude survey. —Personnel activity reports.
	—Increased satisfaction with the classification results under the new system.	—Perceptions of satisfaction with classification process.	—Focus groups. —Attitude survey.
b. Position Descriptions and Classification Process.	—Less difficulty and less time spent on classification by managers.	—Perceptions of difficulty and time spent on classification activities by managers and personnelists.	—Focus groups. —Attitude survey. —Personnel activity reports.
	—Fewer position descriptions	—Reduced time to develop position descriptions.	—Attitude survey. —Personnel activity reports.
	—Increased satisfaction with the classification results under the new system.	—Perceptions of satisfaction with classification process.	—Focus groups. —Attitude survey.
	—Development of generic classification standards.	—Implementation of generic standards.	—Personnel activity reports.
3. Pay for Performance:			
a. Supervisory Pay Adjustments and Differentials.	—Reward top performers who take supervisory and managerial assignments.	—Attitudes of supervisors and managers with pay.	—WES workforce data. —Attitude survey.
b. Promotion Link	—Promotions based on individual's performance.	—Probability of promotion for high performers.	—WES workforce data. —Attitude survey.
c. Link Between Performance and Pay.	—Stronger link between performance and pay.	—Pay for performance correlations. —Perception of pay for performance link.	—WES workforce data. —Attitude survey.
	—Improve retention of high performers.	—Employee perception of equality	—Attitude survey.

APPENDIX A—INTERVENTION IMPACT MODEL: PROJECT EVALUATION—Continued

Intervention	Expected effects	Measures	Data sources
	—Increase turnover among low performers.	—Turnover rates by performance over time.	—WES workforce data.
	—Increase in supervisory decision making authority accountability.	—Supervisors perception of pay for performance link.	—Attitude survey.
	—Increase pay satisfaction	—Employees perception of pay for performance link.	—Attitude survey.
d. Awards	—Reward/motivate performance ..	—Perceived motivational power ...	—Attitude survey.
	—To support fair and appropriate distribution of awards.	—Amount and number of awards by occupational family, demographics.	—WES workforce data.
		—Perceived fairness of awards	—Attitude survey.
		—Satisfaction with monetary awards.	—Attitude survey.
4. Hiring and Placement:			
a. Hiring Authority	—Reduction in time to hire	—Time lag from announcement to date.	—WES workforce data hiring log.
	—Improve rate of job offers/acceptance.	—Offer acceptance rate	—WES workforce data hiring log.
	—Improve image as interested caring employer.	—Offer acceptance rate	—Managers' and supervisors' documented experience.
b. Modified Term Appointments.	—Decrease in hiring authorities ...	—Better qualified candidates within the temporary workforce.	—WES workforce data.
c. Extended Probationary Period.	—Provide managers time to accurately identify successful employees.	—Managers perception of new hires success.	—Attitude survey.
		—New hires performance ratings	—WES workforce data.
	—Increase in length of probation for engineers and scientists.	—Pre and post comparison of length of probation.	—WES workforce data.
	—Increase in voluntary (in lieu of adverse action) and involuntary turnover of low performers during probation.	—Comparison of voluntary/involuntary turnover rates for low performers during probation period.	—WES workforce data.
5. Employee Development:			
a. Sabbaticals	—Increase development of employees.	—Perception of fairness in career development.	—Attitude survey.
	—Use of sabbaticals for career development.		—Documented experience of managers and supervisors.
b. Degree Training	—Increase development of employees.	—Perception of fairness in career development.	—Attitude survey.
6. Reduction-In-Force:			
Modified RIF	—Retention of high performers	—Evaluation rating vs RIF turnover.	—WES workforce data.
			—Historical WES data.
			—Historical RIF data from other Army Laboratories.
	—Reduce disruption to the workforce by limiting RIF to occupational family.	—Attitudes on a RIF action	—Attitude survey.
7. Combination of all Interventions:			
All	—Improved organizational effectiveness.	—Combination of personnel measures.	—All data sources.
	—Improved management of R&D workforce.	—Employee/management satisfaction.	—Attitude survey.
	—Improved planning	—Planning procedures	—Strategic planning documents.
	—Improved cross functional coordination.	—Perceived effectiveness of planning procedures.	—Organizational charts.
		—Actual perceived coordination ...	
	—Increased product success	—Customer satisfaction	—Attitude survey.
			—Customer satisfaction surveys.

Editorial Note: FR Doc. 98-5425 which was originally published in the issue of Tuesday, March 3, 1998, at page 10464 is being republished in its entirety in the issue of Wednesday, March 25, 1998, because of typesetting errors.

[FR Doc. 98–5425 Filed 3–24–98; 8:45 am]

BILLING CODE 6325–01–P

Reader Aids

Federal Register

Vol. 63, No. 57

Wednesday, March 25, 1998

CUSTOMER SERVICE AND INFORMATION

Federal Register/Code of Federal Regulations

General Information, indexes and other finding aids	**202–523–5227**
Laws	**523–5227**
Presidential Documents	
Executive orders and proclamations	**523–5227**
The United States Government Manual	**523–5227**
Other Services	
Electronic and on-line services (voice)	**523–4534**
Privacy Act Compilation	**523–3187**
Public Laws Update Service (numbers, dates, etc.)	**523–6641**
TTY for the deaf-and-hard-of-hearing	**523–5229**

ELECTRONIC RESEARCH

World Wide Web

Full text of the daily Federal Register, CFR and other publications:

http://www.access.gpo.gov/nara

Federal Register information and research tools, including Public Inspection List, indexes, and links to GPO Access:

http://www.nara.gov/fedreg

E-mail

PENS (Public Law Electronic Notification Service) is an E-mail service that delivers information about recently enacted Public Laws. To subscribe, send E-mail to

listproc@etc.fed.gov

with the text message:

subscribe publaws-l <firstname> <lastname>

Use listproc@etc.fed.gov only to subscribe or unsubscribe to PENS. We cannot respond to specific inquiries at that address.

Reference questions. Send questions and comments about the Federal Register system to:

info@fedreg.nara.gov

The Federal Register staff cannot interpret specific documents or regulations.

FEDERAL REGISTER PAGES AND DATES, MARCH

10123–10288 2
10289–10490 3
10491–10742 4
10743–11098 5
11099–11358 6
11359–11580 9
11581–11818 10
11819–11984 11
11985–12382 12
12383–12602 13
12603–12976 16
12977–13110 17
13111–13328 18
13329–13480 19
13481–13772 20
13773–14018 23
14019–14328 24
14329–14600 25

CFR PARTS AFFECTED DURING MARCH

At the end of each month, the Office of the Federal Register publishes separately a List of CFR Sections Affected (LSA), which lists parts and sections affected by documents published since the revision date of each title.

3 CFR

Proclamations:
7068 10289
7069 10487
7070 10489
7071 10741
7072 11983
7073 12973
7074 12975

Executive Orders:
12957 (See Notice of March 4, 1998) 11099
12959 (See Notice of March 4, 1998) 11099
13059 (See Notice of March 4, 1998) 11099
13077 12381
13078 13111

Administrative Orders:
Presidential Determinations:
No. 98–15 of February 26, 1998 12937
No. 98–16 of March 4, 1998 13109
No. 98–17 of March 9, 1998 14329
No. 98–18 of March 9, 1998 14331
No. 98–19 of March 13, 1998 14019

Memorandums:
March 5, 1998 12377

5 CFR

880 10291
2610 13115

Proposed Rules:
300 13564

7 CFR

2 11101
6 13481
56 13329
301 12603
319 .....12383, 13482
401 14333
454 14333
457 14333
723 11581
900 10491
929 10491
930 14021
966 12396
980 12396
982 10491
985 14334
989 .....10491, 11585
999 12977
1496 11101
1728 11589

Proposed Rules:
1000 12417
1001 12417
1002 12417
1004 12417
1005 12417
1006 12417
1007 12417
1012 12417
1013 12417
1030 12417
1032 12417
1033 12417
1036 12417
1040 12417
1044 12417
1046 12417
1049 12417
1050 12417
1064 12417
1065 12417
1068 12417
1076 12417
1079 12417
1106 12417
1124 12417
1126 12417
1131 12417
1134 12417
1135 12417
1137 12417
1138 12417
1139 12417

8 CFR

103 12979
204 12979
208 12979
209 12979
244 12979
245 12979
264 12979
299 12979
316 12979
332 12979
335 12979

9 CFR

2 10493
3 10493
78 14335
94 120603
381 11359
417 11104

Proposed Rules:
92 12700
93 12700
94 12700
95 12700
96 12700
97 12700
98 12700
130 12700
145 12036

10 CFR

9 12988
30 13773
32 13773
40 13773
50 13773
52 13773
60 13773
61 13773
70 13773
71 13773
72 ..... 13372, 13773
110 13773
150 13773
430 13308
600 10499
1500 13485
1502 13485
1504 13485
1506 13485
1530 13485
1534 13485
1535 13485

Proposed Rules:

Ch. I 11169
33 14381
72 12040
430 10571

11 CFR

Proposed Rules:

100 10783
114 10783

12 CFR

205 14528
357 10293
575 11361
614 ..... 10515, 12401
627 12401
701 ..... 10743, 14025
704 10743
708 ..... 10515, 10518
712 10743
724 14025
740 10743
792 14336

Proposed Rules:

202 ..... 12326, 14552
203 12329
205 14555
210 12700
213 14538
226 14548
229 12700
230 14533
357 10349
611 13564

13 CFR

115 12605

14 CFR

25 ..... 12862, 13773
39 ..... 10295, 10297, 10299, 10301, 10519, 10523, 10527, 10758, 11106, 11108, 11110, 11112, 11113, 11114, 11116, 11367, 11819, 11820, 11821, 11823, 11985, 11987, 12401, 12403, 12405, 12407, 12408, 12605, 12607, 12609, 12611, 12613, 12614, 12615, 12617, 13116, 13332, 13333, 13335, 13487, 13489, 13491, 13493, 13495, 13497, 13498, 13500, 13502, 13505, 13507, 13508, 13510, 13512, 13514, 14026
71 ..... 11118, 11989, 11990, 11991, 12410, 12618, 12619, 12620, 12622, 12623, 12624, 12625, 12627, 12628, 12629, 12630, 12632, 12633, 12634, 12635, 12637, 12638, 12639, 12640, 12988, 12989, 12991, 12992, 13775, 13776, 13778, 13779, 14344, 14345, 14346, 14347, 14348
91 10123
95 13118
97 ..... 10760, 10761, 10763, 11992, 11994, 11995
198 13734
382 ..... 10528, 11954
1274 12992

Proposed Rules:

25 14381
39 ..... 10156, 10157, 10349, 10572, 10573, 10576, 10579, 10783, 11169, 11171, 11381, 11631, 12042, 12418, 12419, 12707, 12709, 13013, 13151, 13374, 13376, 13378, 13379, 13381, 13566, 13569, 13570, 13572, 13574. 13576, 13577, 13579, 13581, 13800, 13801, 14043, 14044, 14047, 14049, 14051, 14055, 14383, 14385
71 ..... 11382, 11853, 12043, 12044, 12045, 12047, 12048, 12049, 12050, 12051, 12052, 12053, 12054, 12055, 12710, 12712, 13015, 13016, 13803, 13804, 13805, 13807, 13808, 13809, 14387, 14388

15 CFR

70 10303
770 14028
774 14028
902 ..... 11591, 14030

Proposed Rules:

960 10785
2004 10159

16 CFR

305 14034
1203 11712

Proposed Rules:

Ch. II 13017
1700 13019

17 CFR

1 11368
5 11368
31 11368
230 13916
232 13916
239 13916
240 13916
270 13916
274 13916

Proposed Rules:

1 ..... 12713, 13025
200 11173
230 ..... 10785, 13988
239 13988
240 ..... 11173, 12056, 12062
249 11173
270 13988
274 13988

19 CFR

7 10970
10 10970
19 11825
101 ..... 11825, 12994
133 11996
142 12995
145 10970
146 11825
161 11825
173 10970
174 10970
178 10970
181 10970
191 ..... 10970, 13105
351 13516

Proposed Rules:

101 13025
122 ..... 11383, 13025

20 CFR

656 13756

Proposed Rules:

404 11854
422 11856

21 CFR

Ch. 1 14035
14 11596
101 14349
104 11597
173 11118
211 14355
310 13526
510 11597
514 10765
520 13121
522 ..... 11597, 13121, 13122
524 14035
528 14035
556 ..... 13122, 13337, 14035
558 ..... 10303, 11598, 11599, 13123, 14356
1220 12996

Proposed Rules:

101 ..... 13154, 14390
184 12421
314 11174
801 14390
803 14390
804 14390
806 14390
807 14390
809 10792
810 14380
820 14390
821 14390
864 10792
880 11632
1002 14390
1020 14390

22 CFR

41 ..... 10304, 13026
514 13337

24 CFR

597 10714
888 11956
950 12334
953 12334
955 12334
1000 ..... 12334, 13105
1003 12334
1005 ..... 12334, 13105

Proposed Rules:

206 12930

25 CFR

256 10124
514 12312

Proposed Rules:

Ch. III 10798, 12323
518 12319

26 CFR

1 ..... 10305, 10772, 12410, 12641
301 13124

Proposed Rules:

1 ..... 11177, 11954, 12717, 13383, 14391
301 10798

27 CFR

9 11826
55 12643
72 12643
178 12643
179 12643

Proposed Rules:

9 13583

28 CFR

60 11119
61 11120

Proposed Rules:

511 11818

29 CFR

4044 12411

Proposed Rules:

1910 13338
1915 13338
1926 13338
2200 10166

30 CFR

7 12647
31 12647
32 12647
36 12647
70 12647
75 12647
870 10307
914 12648
916 10309
918 11829
920 13781
943 10317

Proposed Rules:

206 ..... 11384, 14057
243 11634
250 ..... 11385, 11634
290 11634

31 CFR

2 14356
358 11354
500 10321
505 10321
515 10321

32 CFR

21 12152
22 12152
23 12152
28 12152
32 12152
34 12152

40a....11831
220....11599
706....13340
Proposed Rules:
220....11635
323....11198
507....11858

33 CFR

100....14036
117....10139, 10777, 11600, 14037
Proposed Rules:
Subch. S....13583
100....14057
117....11641, 11642
175....13586

36 CFR

7....13341
Proposed Rules:
7....13383
1192....14571

38 CFR

2....11121
3....11122
17....11123
21....14037
36....12152

39 CFR

20....13124
Proposed Rules:
111....11199, 12864

40 CFR

52....11370, 11372, 11600, 11831, 11833, 11836, 11839, 11840, 11842, 13343, 13525, 13784, 13787, 13789, 13795, 14357
62....11606, 13531
63....13533
70....13346
81....11842, 12007, 12652, 13343
82....11084
86....11374, 11847
131....10140
180....10537, 10543, 10545, 10718, 13126, 13128, 13129, 13541, 14360, 14363, 14371
264....11124
265....11124
300....11332, 11375
302....13460
355....13460
721....11608
Proposed Rules:
52....11386, 11387, 11643, 11862, 11863, 11864, 11865, 13154, 13385, 13587, 13810, 13811
60....13587
62....11643, 13154, 13589
63....14182
70....14392
81....11865, 13385
131....10799
180....10352, 10722, 13156
264....11200
265....11200
300....10582, 11340, 13385, 13816
721....11643

42 CFR

400....11147
409....11147
410....11147
411....11147
412....11147
413....11147
424....11147
440....11147
441....10730
485....11147
488....11147
489....10730, 11147
498....11147
Proposed Rules:
Ch. IV....10732
400....13590
401....14506
403....14506
405....14506
410....14506
411....11649, 14506
413....14506
421....13590
424....11649
435....11649
447....14506
455....11649
466....14506
473....14506
493....14506
1003....14393
1005....14393
1006....14393

43 CFR

5040....13130
Proposed Rules:
4....11634
414....12068
4200....13608

44 CFR

64....11609, 13543
65....10144, 10147
67....10150
Proposed Rules:
67....10168
206....10816

45 CFR

1305....12652
1611....11376
Proposed Rules:
60....14059
283....10264
302....14402
304....14402
307....10173, 14402
1215....12068
1602....11393
2507....12068

46 CFR

56....10547
71....10777

47 CFR

1....10153, 10780, 12013, 12658, 13610
21....12658
22....10338
24....10153, 10338, 12658
26....12658
27....10338, 12658
61....13132
64....11612, 13798
73....10345, 10346, 11376, 11378, 11379, 12412, 12413, 13347, 13545, 13546
74....13546
90....10338, 12658
95....12658
101....10338, 10778, 10780, 14039
Proposed Rules:
1....10180, 13610
25....11202
73....10354, 10355, 11400, 11401, 12426, 12427, 13027, 13158, 13612, 13818
100....11202

48 CFR

Ch. V....12969
201....11522
202....11522
204....11522
209....11522, 11850
212....11522, 11850
213....11850
214....11522
215....11522
216....11522
217....11522, 11850
219....11522
222....11850
223....11522
225....11522
226....11522
227....11522
229....11522
231....11522, 12862
232....11522
233....11522
234....11522
235....11522
236....11522
237....11522
239....11522
241....11522
242....11522
243....11522
250....11522
252....10499, 11522, 11850
253....11522
532....12660
552....12660
927....10499
952....10499
970....10499
1511....10548
1515....10548
1552....11074
1801....11479
1802....11479
1803....11479
1804....11479
1805....11479
1806....12997
1807....12997
1814....11479
1815....11479
1816....11479, 12997, 13133
1817....11479
1819....12997
1832....11479, 14039
1833....14041
1834....11479
1835....11479
1837....12997
1842....11479
1844....11479
1852....11479, 13133, 14039
1853....11479
1871....11479
1872....11479
Proposed Rules:
31....13771
32....11074
46....13770
52....11074
232....11074
252....11074
806....11865

49 CFR

1....10781
191....12659
192....12659
194....10347
195....12659
199....12998, 14041
209....11618
213....11618
214....11618
215....11618
216....11618
217....11618
218....11618
219....11618
220....11618
221....11618
223....11618
225....11618
228....11618
229....11618
230....11618
231....11618
232....11618
233....11618
234....11618
235....11618
236....11618
240....11618
377....11624
386....12413
571....12660
Proposed Rules:
37....14560
38....14571
383....10180
384....10180
571....10355
653....10183
654....10183

50 CFR

17....12664, 13134, 14378
21....10550
38....11624
227....13347
300....13000
600....10677
622....10154, 10561, 11628
630....12687
644....14030
648....11160, 11591, 11852, 13563
660....10677
679....10569, 11160, 11161, 11167, 11629, 12027, 12415, 12416, 12688, 12689, 12697, 12698, 13009, 131150, 13798, 14379

697.....10154, 14042

Proposed Rules:

17 .....10817, 13819, 13825, 14060, 14414
20.....13748, 14415
36.....13158
222.....11482, 13832
226 .....11482, 11750, 11774
227 .....11482, 11750, 11774, 11798, 13832
300.....11401, 11649
600.....11402, 12427
648.....13028
660.....13833
679.....10583, 13161

REMINDERS

The items in this list were editorially compiled as an aid to Federal Register users. Inclusion or exclusion from this list has no legal significance.

RULES GOING INTO EFFECT MARCH 25, 1998

AGRICULTURE DEPARTMENT

Animal and Plant Health Inspection Service

Interstate transportation of animals and animal products (quarantine):
- Brucellosis in cattle and bison—
  - State and area classifications; published 3-25-98

COMMERCE DEPARTMENT

National Oceanic and Atmospheric Administration

Habitat conservation planning and incidental take permitting process; handbook availability; no surprises policy; published 2-23-98

ENVIRONMENTAL PROTECTION AGENCY

Pesticides; tolerances in food, animal feeds, and raw agricultural commodities:
- Imidacloprid; published 3-25-98
- Titanium dioxide; published 3-25-98

FEDERAL RESERVE SYSTEM

Electronic fund transfers (Regulation E):
- Disclosure requirements; delivery by electronic communication; published 3-25-98

HEALTH AND HUMAN SERVICES DEPARTMENT

Food and Drug Administration

Animal and human drugs:
- Current good manufacturing practices—
  - Testing and approval or rejection of components, drug product containers, and closures; technical amendment; published 3-25-98

Animal drugs, feeds, and related products:
- New drug applications—
  - Bambermycins; published 3-25-98

Food for human consumption:
- Food labeling—
  - Nutrient content claims; definition of term ''healthy''; published 3-25-98

Medical devices:
- Labeling—
  - Latex condoms; expiration date requirement; published 9-26-97

INTERIOR DEPARTMENT

Fish and Wildlife Service

Endangered and threatened species:
- Mexican spotted owl, etc.; published 3-25-98

Habitat conservation planning and incidental take permitting process; handbook availability; no surprises policy; published 2-23-98

TRANSPORTATION DEPARTMENT

Federal Aviation Administration

Airworthiness directives:
- Cessna; published 2-18-98
- Fairchild; published 2-18-98
- Gulfstream; published 2-18-98
- Gulfstream American; published 2-18-98
- Lockheed; published 2-18-98
- McDonnell Douglas; published 2-18-98
- Mitsubishi; published 2-18-98
- Sabreliner; published 2-18-98

Airworthiness standards:
- Transport category airplanes—
  - Technical amendments and other miscellaneous corrections; published 2-23-98

TREASURY DEPARTMENT

National Security Information designations; published 3-25-98

COMMENTS DUE NEXT WEEK

AGRICULTURE DEPARTMENT

Agricultural Marketing Service

Melons grown in Texas; comments due by 3-30-98; published 1-29-98

AGRICULTURE DEPARTMENT

Animal and Plant Health Inspection Service

Interstate transportation of animals and animal products (quarantine):
- Livestock markets; handling of reactors; comments due by 3-30-98; published 1-27-98

Plant-related quarantine, domestic and foreign:
- Karnal bunt disease—
  - Regulated areas; movement from; comments due by 3-30-98; published 1-28-98

Plant-related quarantine, domestic:
- Fire ant, imported; comments due by 3-30-98; published 1-28-98

Plant-related quarantine, foreign:
- Karnal bunt disease—
  - Mexicali Valley, Mexico; comments due by 3-30-98; published 1-27-98

AGRICULTURE DEPARTMENT

Forest Service

Forest development transportation system administration; comments due by 3-30-98; published 1-28-98
- Temporary suspension of road construction in roadless areas; proposed interim rule; comments due by 3-30-98; published 1-28-98
- Temporary suspension of road construction in roadless areas; comments due by 3-30-98; published 2-27-98

National Forest System projects and activities; notice, comment, and appeal procedures; prohibition on appeals by Forest Service employees removed; comments due by 3-30-98; published 1-28-98

COMMERCE DEPARTMENT

National Oceanic and Atmospheric Administration

Fishery conservation and management:
- Alaska; fisheries of Exclusive Economic Zone—
  - Bering Sea and Aleutian Islands groundfish; comments due by 3-31-98; published 3-16-98
- Atlantic coastal fisheries
  - Lobsters; comments due by 4-1-98; published 3-2-98
- Magnuson Act provisions
  - Exempted fishing permit applications; comments due by 3-30-98; published 3-13-98

International fisheries regulations:
- Land Remote Sensing Policy Act of 1992—
  - Private land remote-sensing space systems; licensing provisions; comments due by 4-2-98; published 12-12-97

Oil Pollution Act:
- Natural resource damage assessments; comments due by 3-30-98; published 2-11-98

DEFENSE DEPARTMENT

Federal Acquisition Regulation (FAR):
- Electronic data interchange transactions; shipment evidence; comments due by 3-30-98; published 1-27-98

Personnel:
- Personnel security policies for granting access to classified information; comments due by 3-31-98; published 1-30-98
- Reciprocity of facilities; national policy and implementation guidelines; comments due by 3-31-98; published 1-30-98
- Technical surveillance countermeasures; national policy; comments due by 3-31-98; published 1-30-98

DEFENSE DEPARTMENT

Navy Department

Personnel:
- Employee conduct standards and reporting procedures on defense related employment; CFR parts removed; comments due by 3-30-98; published 1-27-98

ENVIRONMENTAL PROTECTION AGENCY

Drinking water:
- National primary drinking water regulations—
  - Consumer confidence reports; comments due by 3-30-98; published 2-13-98

Pesticides; tolerances in food, animal feeds, and raw agricultural commodities:
- Food packaging impregnated with insect repellant; jurisdiction transferred to FDA; comments due by 4-3-98; published 3-4-98
- Food packaging impregnated with insect repellent; jurisdiction transferred to FDA; comments due by 4-3-98; published 3-4-98

FEDERAL COMMUNICATIONS COMMISSION

Radio stations; table of assignments:

Arkansas; comments due by 3-30-98; published 2-13-98
Kansas; comments due by 3-30-98; published 2-13-98
New York; comments due by 3-30-98; published 2-13-98
Texas; comments due by 3-30-98; published 2-13-98

FEDERAL RESERVE SYSTEM

Securities credit transactions:
Margin regulations; periodic review; comments due by 4-1-98; published 1-16-98

FEDERAL RETIREMENT THRIFT INVESTMENT BOARD

Thrift savings plan:
Administrative errors correction; comments due by 3-30-98; published 1-29-98

GENERAL SERVICES ADMINISTRATION

Federal Acquisition Regulation (FAR):
Electronic data interchange transactions; shipment evidence; comments due by 3-30-98; published 1-27-98

HEALTH AND HUMAN SERVICES DEPARTMENT

Children and Families Administration

Child support enforcement program:
Computer support enforcement systems; automated data processing funding limitation; comments due by 4-1-98; published 3-2-98

HEALTH AND HUMAN SERVICES DEPARTMENT

Food and Drug Administration

Human drugs:
Labeling of drug products (OTC)—
Standardized format; comments due by 3-30-98; published 2-13-98

HOUSING AND URBAN DEVELOPMENT DEPARTMENT

Federal National Mortgage Association (Fannie Mae) and Federal Home Mortgage Corporation (Freddie Mac):
Non-mortgage investments; regulatory requirements; comments due by 3-30-98; published 12-30-97

INTERIOR DEPARTMENT

Fish and Wildlife Service

Endangered and threatened species:
Pecos pupfish; comments due by 3-31-98; published 1-30-98
San Bernardino kangaroo rat; comments due by 3-30-98; published 1-27-98
Willamette daisy, Fender's Blue butterfly, and Kincaid's lupine; comments due by 3-30-98; published 1-27-98

Endangered Species Convention:
Appendices and amendments; comments due by 3-31-98; published 1-30-98

INTERIOR DEPARTMENT

Reclamation Bureau

Colorado River Water Quality Improvement Program:
Offstream storage of Colorado River water and interstate redemption of storage credits in the lower division States; comments due by 4-3-98; published 2-27-98

INTERIOR DEPARTMENT

Surface Mining Reclamation and Enforcement Office

Permanent program and abandoned mine land reclamation plan submissions:
Arkansas; comments due by 3-30-98; published 2-26-98

JUSTICE DEPARTMENT

Immigration and Naturalization Service

Immigration:
Employment eligibility verification process; number of acceptable documents reduced and other changes; comments due by 4-3-98; published 2-2-98

NATIONAL AERONAUTICS AND SPACE ADMINISTRATION

Federal Acquisition Regulation (FAR):
Electronic data interchange transactions; shipment evidence; comments due by 3-30-98; published 1-27-98

NUCLEAR REGULATORY COMMISSION

Practice rules:
Domestic licensing proceedings—
High-level radioactive waste disposal at geologic repository; comments due by 3-30-98; published 2-2-98

Production and utilization facilities; domestic licensing:
Nuclear power plants—
Components; construction, inservice inspection, and inservice testing; industry codes and standards; comments due by 4-3-98; published 1-26-98

SECURITIES AND EXCHANGE COMMISSION

Securities:
Net capital rule—
Capital requirements for broker-dealer's proprietary positions; statistical models; comments due by 3-30-98; published 12-30-97
Capital requirements for broker-dealers; net worth charges (''haircuts'') for computing interest rate instruments; comments due by 3-30-98; published 12-30-97

OFFICE OF UNITED STATES TRADE REPRESENTATIVE

Trade Representative, Office of United States

Freedom of Information Act; implementation; comments due by 4-1-98; published 3-2-98

TRANSPORTATION DEPARTMENT

Federal Aviation Administration

Air carrier certification and operations:
Repair assessment for pressurized fuselages; comments due by 4-2-98; published 1-2-98

Airworthiness directives:
Airbus; comments due by 4-3-98; published 3-4-98
Airbus Industrie; comments due by 3-30-98; published 2-27-98
Boeing; comments due by 4-3-98; published 2-2-98
Cessna; comments due by 3-30-98; published 2-5-98
Eurocopter France; comments due by 4-2-98; published 3-3-98
Hartzell Propeller Inc.; comments due by 3-30-98; published 1-28-98
Pilatus Aircraft Ltd.; comments due by 4-3-98; published 3-3-98
Raytheon; comments due by 3-31-98; published 2-2-98

Class E airspace; comments due by 3-30-98; published 2-12-98

TRANSPORTATION DEPARTMENT

National Highway Traffic Safety Administration

Motor vehicle safety standards:
Air brake systems—
Medium and heavy vehicles stability and control during braking; malfunction indicator lamps; comments due by 4-3-98; published 2-17-98

TREASURY DEPARTMENT

Customs Service

Articles conditionally free, subject to a reduced rate, etc.:
Andean Trade Preference Act; duty preference provisions; implementation; comments due by 3-31-98; published 1-30-98

Seizures, penalties, and liquidated damages; relief petitions; comments due by 4-3-98; published 2-2-98

TREASURY DEPARTMENT

Internal Revenue Service

Excise taxes:
Deposit safe harbor rules and fuel floor stocks taxes; cross reference; comments due by 3-30-98; published 12-29-97

Income taxes:
Foreign investment—
Passive foreign investment company preferred shares; special income exclusion; cross reference; comments due by 4-2-98; published 1-2-98
Loans to plan participants from qualified employer plans; comments due by 4-2-98; published 1-2-98
Qualified long-term care insurance contracts; consumer protection; comments due by 4-2-98; published 1-2-98
Qualified plans and individual retirement plans; required distributions; comments due by 3-30-98; published 12-30-97

Procedure and administration:
Agreements for tax liability installment payments; comments due by 3-31-98; published 12-31-97
Unauthorized collection actions, civil cause of action; comments due by 3-31-98; published 12-31-97

LIST OF PUBLIC LAWS

This is a continuing list of public bills from the current session of Congress which

have become Federal laws. It may be used in conjunction with ''P L U S'' (Public Laws Update Service) on 202–523–6641. This list is also available online at http://www.nara.gov/fedreg.

The text of laws is not published in the **Federal Register** but may be ordered in ''slip law'' (individual pamphlet) form from the Superintendent of Documents, U.S. Government Printing Office, Washington, DC 20402 (phone, 202–512–1808). The text will also be made available on the Internet from GPO Access at http://www.access.gpo.gov/su_docs/. Some laws may not yet be available.

H.R. 595/P.L. 105–163

To designate the Federal building and United States courthouse located at 475 Mulberry Street in Macon, Georgia, as the ''William Augustus Bootle Federal Building and United States Courthouse''. (Mar. 20, 1998; 112 Stat. 31)

H.R. 3116/P.L. 105–164

Examination Parity and Year 2000 Readiness for Financial Institutions Act (Mar. 20, 1998; 112 Stat. 32)

S. 347/P.L. 105–165

To designate the Federal building located at 61 Forsyth Street SW., in Atlanta, Georgia, as the ''Sam Nunn Atlanta Federal Center''. (Mar. 20, 1998; 112 Stat. 37)

Last List March 12, 1998

Public Laws Electronic Notification Service (PENS)

PENS is a free electronic mail notification service for newly enacted public laws. To subscribe, send E-mail to **listproc@etc.fed.gov** with the text message: **subscribe PUBLAWS-L** (your name)

Note: This service is strictly for E-mail notification of new public laws. The text of laws is not available through this service. **PENS** cannot respond to specific inquiries sent to this address.